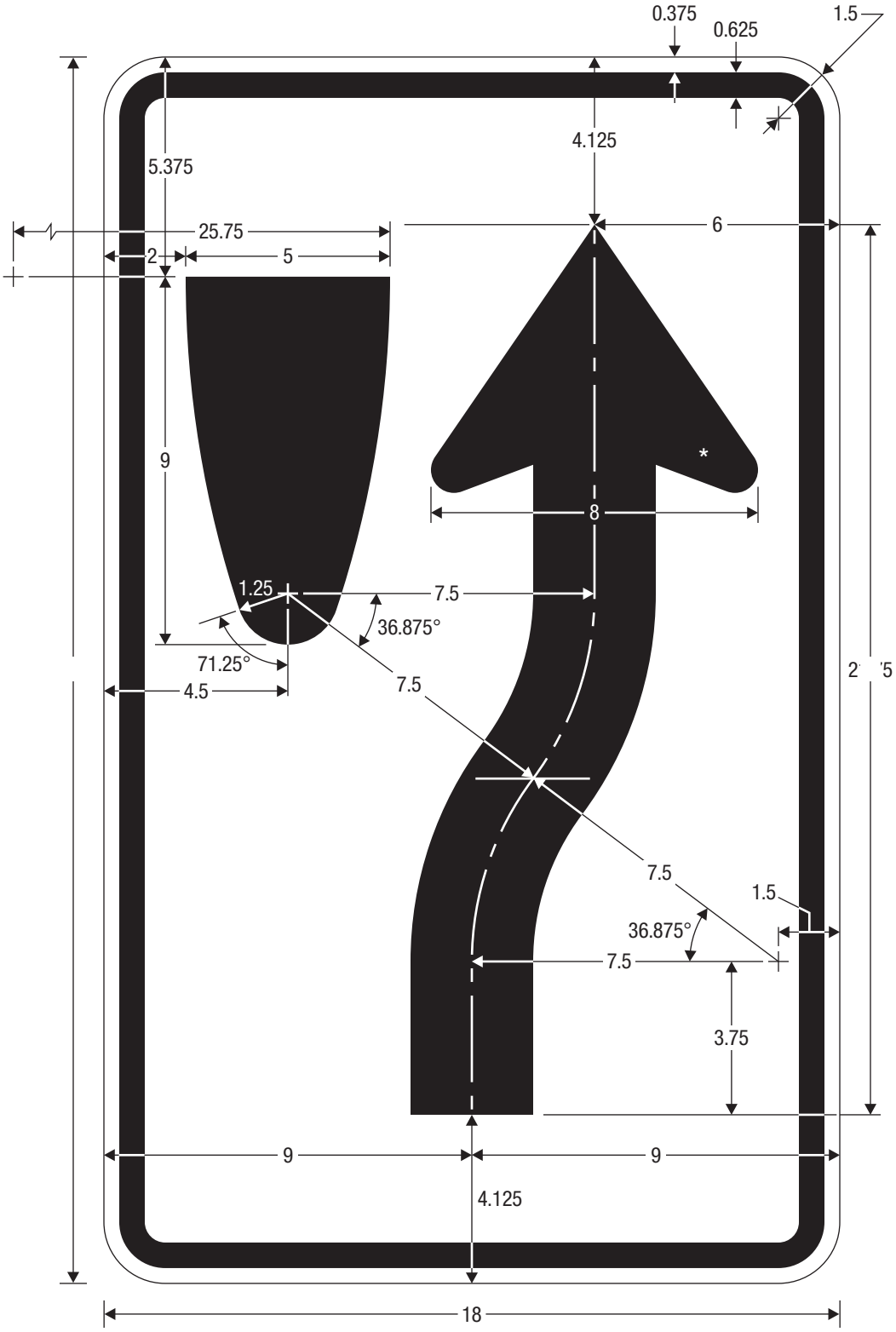

R4-7c

NARROW KEEP RIGHT

Reverse symbols for R4-8c

* See page 6-2 for arrow design.

COLORS: LEGEND, BORDER — BLACK
BACKGROUND — WHITE (RETROREFLECTIVE)