ARIZONA HIGHWAY BARRIER POCKET GUIDE

NOVEMBER 2017

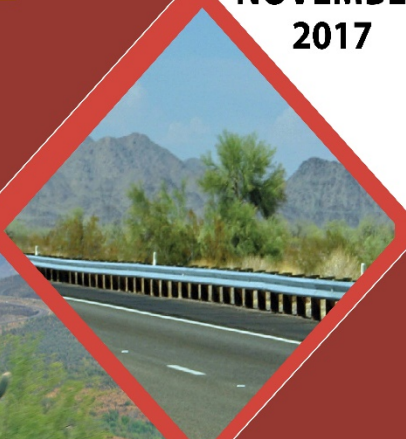

GUIDELINES FOR THE INSTALLATION, INSPECTION AND MAINTENANCE OF COMMONLY USED BARRIER SYSTEMS IN ARIZONA

Page left intentionally blank

Infrastructure Delivery and Operations

This guide was sponsored by the Federal Highway Administration (FHWA), under the FAST Act Grant

The following individuals prepared or reviewed this document:

Project Team

William P. Longstreet – FHWA Safety Office COTM
Karen L. Boodlal – KLS Engineering, LLC
William Fitzgerald – KLS Engineering, LLC
Glenn Schulte – KLS Engineering, LLC

Arizona Team

Toni Whitfield – FHWA Division Office
Jeffrey King – FHWA Division Office
Chris Cooper – ADOT Design
Paul Duran – ADOT Construction

U.S. Department of Transportation
Federal Highway Administration

Contents

Introduction _____ 1

Clear Zone _____ 2

Roadside Hazards _____ 4

ADOT Embankment Guidance _____ 5

Barriers _____ 6

Rigid Systems _____ 6

Semi-Rigid System _____ 8

Flexible Systems _____ 10

Barrier Design Principles _____ 13

Deflection: _____ 13

Slope in front of Barrier _____ 15

Guardrail in Combination with Curb _____ 17

Soil Backing _____ 18

Flare Rate _____ 19

Length of Need _____ 20

LON Field Check _____ 22

Gaps _____ 25

Terminals and Crash Cushions _____ 26

Terminals _____ 26

Terminal Grading Details _____ 35

Terminal Installation _____ 39

Crash Cushions _____ **41**

Transitions - from W-beam to Rigid Barrier/Bridge Rail _____ 45

Special Designs _____ 47

Omitted Post: _____ **47**

Long Span Guardrail System: _____ **49**

Leaveouts for Posts in Structural Pavement _____ **50**

Extra Blockouts _____ **50**

Turnout Conflicts (in runs of guardrail) _____ **51**

Guardrail Posts in Rock _____ **51**

Transitions from G4 to MGS _____ **53**

Maintenance _____ 54

General Guidelines _____ **54**

National Guidelines for W-Beam _____ **56**

Cable Barrier Guidelines _____ **69**

Acronyms _____ 70

Resources _____ 71

Disclaimer

This material is based upon work supported by the Federal Highway Administration under Grant Agreement No. 693JJ317500085. Any opinions, findings, and conclusions or recommendations expressed in this publication are those of the author(s) and do not necessarily reflect the view of the Federal Highway Administration. This document does not constitute a national standard, specification or regulation.

The purpose of this pocket guide is to present basic guidelines for guardrail installers, inspectors, and maintenance personnel. This pocket guide presents information contained in the AASHTO Roadside Design Guide 4th Edition, Arizona Roadway Design Guide, ADOT Standard Drawings, ADOT Policies, ADOT Roadway Design Memorandums, and Approved Product List (APL). Barrier installations are to be built and maintained to current ADOT standard drawings and manufacturers' recommendations.

Frequently Asked Questions

When reviewing proposed and existing barrier installations in the field, the following questions should be addressed:

1. Is the hazard being shielded significantly more severe than the barrier itself, and secondly, what is the likelihood of the hazard being impacted? (page 4 – **Roadside Hazards**)

2. Are there any vertical rigid objects within the guardrail system's design **deflection**? (page 13 - **Deflection**)

3. For existing installations, does the guardrail **height** meet criteria? (page 15 – **Slope in Front of Barrier - Height**)

4. Is the **slope in front** of the barrier appropriate (page 15 – **Slope in Front of Barrier**)

5. If a high speed facility, are there **curbs** in combination with guardrail? (page 17 – **Guardrail in Combination with Curbs**)

6. Is there adequate soil support behind the guardrail shielding a non-recoverable fill slope or has the design been appropriately modified? (page 18 – **Soil Backing**)

7. Is the guardrail installation long enough to shield the hazard? (page 20 – **Length of Need**)

8. Should the guardrail be extended upstream to shield other warranting hazard(s)? (page 22 – **LON Field Check**)

9. Is an appropriate terminal being used? (page 28 – **Terminal Selection Flow Chart**)
10. Is the **grading** around the terminal (approach, adjacent, and runout distance) appropriate? (page 36 – **Terminal Grading Details**)
11. Does the guardrail end within 200 feet of the start of another guardrail run that could be connected? (page 25 –**Gaps**)

This document, used in conjunction with field reviews and appropriate ADOT manuals, practices, policies and procedures, provides the information needed to answer these questions in order to install and maintain appropriately performing barriers.

For guardrail **design** questions, please contact Chris Cooper in the Roadway Engineering Group
For guardrail **inspection** questions, please contact Paul Duran in the Construction & Materials QA State Wide Project Inspections Group.

Introduction

Barrier systems are designed and installed for one primary reason – to reduce the severity of a crash by preventing a motorist from reaching a hazard – either an obstacle or non-traversable terrain feature.

The first priority would be to remove the obstacle (or redesign it so it is no longer an area of concern). When the hazard cannot be acceptably mitigated, then a decision is made as to whether installing a barrier is the most appropriate treatment for the situation. This approach is itemized below:

Order of Preference

1. Remove the hazard.
2. Redesign the hazard so it can be safely traversed.
3. Relocate the hazard to a point where it is less likely to be struck.
4. Reduce impact severity by using an appropriate breakaway design.
5. Shield the hazard with a longitudinal barrier or use a crash cushion
6. Delineate the hazard if the previous alternatives are not appropriate.

Clear Zone

The clear zone is defined as the unobstructed, traversable {i.e., recoverable} area provided beyond the edge of the through traveled way for the recovery of errant vehicles. The clear zone includes shoulders, bike lanes, and auxiliary lanes, except those auxiliary lanes that function like through lanes.[1] This is illustrated in Figure 1.

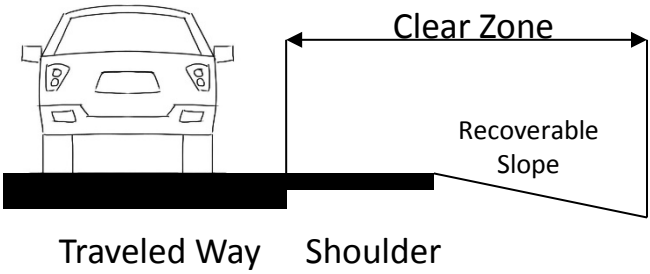

Figure 1: Clear Zone

The amount of clear zone should be as wide as practical. However, distinct values need to be provided for project purposes. Values for the design clear zone are shown in Table 1. Additional clear zone width should be provided if practical; if additional clear area exists beyond the table value, it should not be compromised. There is no guarantee that vehicles won't go beyond the table values. The studies on which the table values are based showed that 20% of the encroachments went farther than 30'.

Table 1: Design Clear Zone

[1] AASHTO Roadside Design Guide, 4th Edition, 2011, 3.1 The Clear-Zone Concept

Design Speed (mph)	Design ADT	Foreslopes		Cut slopes
		1V:6H or flatter	1V:5H to 1V:4H	
≤40	UNDER 750	7-10	7-10	Where fixed object obstructions are placed on cut backslopes the recovery area width requirements should meet the recovery area width indicated by the fill slope table shown utilizing the foreslope of the cut as appropriate fill slope rate
	750-1500	10-12	12-14	
	1500-6000	12-14	14-16	
	OVER 6000	14-16	16-18	
45-50	UNDER 750	10-12	12-14	
	750-1500	12-14	16-20	
	1500-6000	16-18	20-26	
	OVER 6000	18-20	24-28	
55	UNDER 750	12-14	14-18	
	750-1500	16-18	20-24	
	1500-6000	20-22	24-30	
	OVER 6000	22-24	26-30	
60	UNDER 750	16-18	20-24	
	750-1500	20-24	26-30	
	1500-6000	26-30	30	
	OVER 6000	30	30	
>65	UNDER 750	18-20	20-26	
	750-1500	24-26	28-30	
	1500-6000	28-30	30	
	OVER 6000	30	30	

Ref: ADOT Roadway Design Guide, 2012, Table 303.2A

If there is an auxiliary lane present, it may be appropriate to determine the clear zone from the outside edge of the auxiliary lane, using the applicable speed and volume for the specific situation.

Roadside Hazards

Roadside features that are normally considered for shielding are shown in Table 2.

Table 2: Barrier Guidelines for Non-Traversable Terrain and Roadside Obstacles

Obstacle	Guidelines
Bridge piers, abutments, and railing ends	Shielding generally needed.
Boulders	Judgment decision based on nature of fixed object and likelihood of impact.
Culverts, pipes, headwalls	Judgment decision based on size, shape and location of obstacle.
Foreslopes and backslopes (smooth)	Shielding not generally required.
Foreslopes and backslopes (rough)	Judgment decision based on likelihood of impact.
Ditches (parallel)	Refer to Figures 3-6 and 3-7 in Roadside Design Guide.
Ditches (transverse)	Shielding generally required if likelihood of head-on impact is high.
Embankment	Judgment decision based on fill height and slope (see Figure 5-1 in Roadside Design Guide).
Retaining Walls	Judgement decision based on relative smoothness of wall and anticipated maximum angle of impact.
Sign/Luminaire supports	Shielding generally needed for non-breakaway supports.
Traffic signal supports	Isolated traffic signals within clear zone on high-speed rural facilities may need shielding.
Trees	Judgment decision based on site-specific circumstances
Utility poles	Shielding may be needed on a case by case basis.
Permanent bodies of water	Judgment decision based on location and depth of water and likelihood of encroachment.

Ref: AASHTO Roadside Design Guide (RDG), 4th Edition 2011 Chapter 5, Table 5-2, Pg. 5-9

ADOT Embankment Guidance

In general, parallel slopes should be as flat as practical. Figure 2 presents the ADOT graph for warrants for barrier at embankments. It suggests that generally slopes steeper than 4:1 and higher than 12' are candidates for shielding; it does not take traffic speeds, volumes or roadway geometry into consideration.

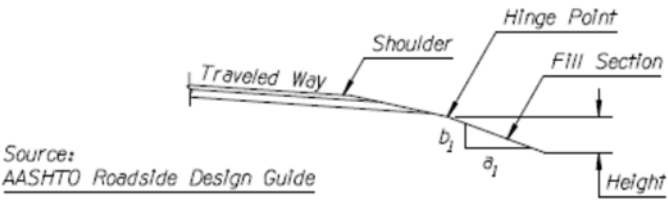

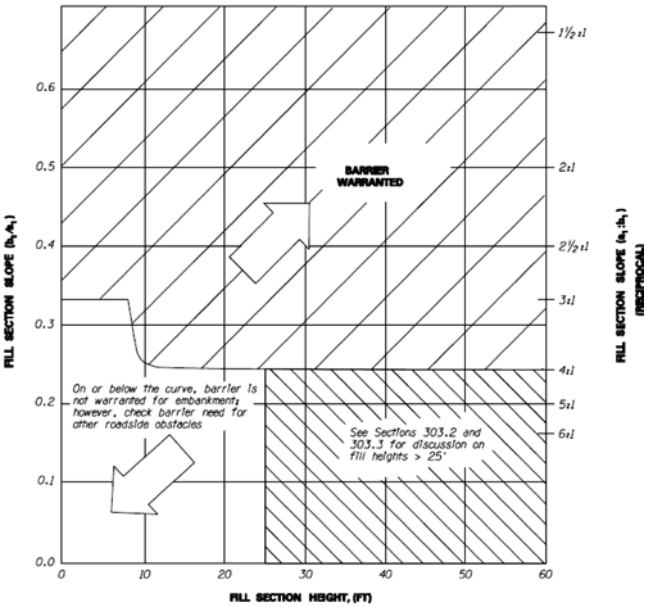

Figure 2: Barrier Consideration for Embankment

Ref: ADOT Roadway Design Guide, 2012 – Figure 303.2

Barriers

A roadside barrier is a longitudinal barrier used to shield motorists from natural or man-made hazards located along either side of a traveled way[2]. Barriers are usually categorized as rigid, semi-rigid, or flexible depending on their deflection characteristics when impacted under (NCHRP 350) MASH TL-3 impact: pickup truck at 62 mph and 25 degrees impact angle.

For more information, go to FHWA Resource Charts at http://safety.fhwa.dot.gov/roadway_dept/policy_guide/road_hardware/resource_charts/

Rigid Systems

Rigid Barrier Systems have little (between 0 to 1 ft.) deflection under the TL-3 conditions described above. The rigid barrier system should be anchored by some acceptable means. The most prevalent rigid barrier in use during the 1970's and '80's was the New Jersey Safety Shape. The flatter lower slope is intended to redirect vehicles impacting at shallow angles with little vehicle damage, but can cause instability to vehicles impacting at high speeds and angles.

In an effort to improve the performance, testing was conducted that led to the development of the F-shape. Similar in shape to the New Jersey barrier, the lower height of the breakpoint allowed increased

[2] AASHTO Roadside Design Guide, 4th Edition, 2011, Chapter 5 – Roadside Barriers

stability and less lift with both the small car and the pickup.

Although the New Jersey shape is still acceptable, ADOT has adopted the F-shape as their preferred rigid barrier.

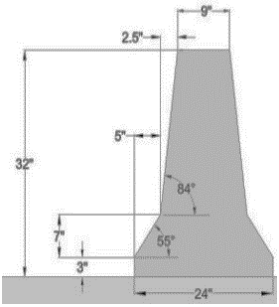

It satisfies TL-3 at 32” height, TL-4 at 36”, and TL-5 at 42”.

For TL-4 and higher applications, the ‘Zone of Intrusion (ZOI)’ may be considered in determining barrier layout.

The Zone of Intrusion (ZOI) is the region measured above and behind the face of a barrier system where an impacting vehicle or any major part of the system may extend during an impact.[3]

If vehicle climb is a concern, or if the 7” projection of the toe in front of the top of the barrier encroaches into a very limited barrier offset, a vertical wall may be an appropriate barrier design.

[3] AASHTO Roadside Design Guide, Section 5.5.2 Barrier Deflection Characteristics.

Semi-Rigid System

Semi-Rigid Barrier Systems have deflections of a few feet (between 2 to 5 ft.) under the TL-3 pickup impact conditions. Most semi-rigid systems consist of post and beam and can be strengthened locally by using additional posts to shield isolated fixed objects located near the rail. These systems should be terminated with an anchor on both ends to maintain the tension in the rail. ADOT uses two guardrail systems; the Midwest Guardrail System (MGS - adopted in December 2017) and the 28” Guardrail System (G4).

The MGS is ADOT’s preferred guardrail for use on new construction.

The major differences between the 28” Guardrail System (G4) and the Midwest Guardrail System (MGS) are the shifting of the W-beam rail splices from the posts to mid-span between posts, and the raising of the rail height to 31”. These two changes provided a stronger system and a better performance with higher center-of-gravity/bumper height pickup vehicles. The MGS guardrail system uses the same rail element as the G4 (holes punched every 3’-1 ½”). However, the blockout is now 12” deep (versus the G4 8”) and the posts are 6’ long (versus the G4 wood post of 5’-4”).

Midwest Guardrail System (MGS)

Test Level: MASH TL-3

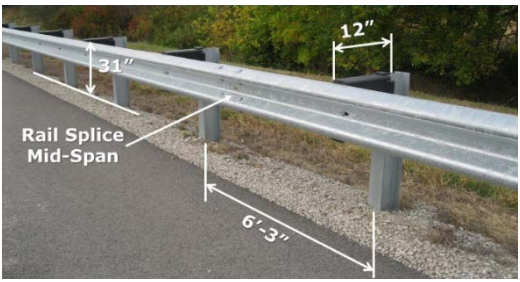

Rail Splice between posts

Height: 31"

Post: W6 x 9 or W6 x 8.5 x 6 ft. Steel or 6" x 8" x 6' wood posts.

Post Spacing: 6'-3"

Block-outs: 12" timber or plastic block-outs.

28" Guardrail System (G4)

Test Level: NCHRP 350(MASH TL-3 steel post only)

Rail Splice on Posts

Height: 28"

Post: W6 x 9 or W6 x 8.5 x 6.5' Steel or wood 6" x 8" x 5'-4"

Post Spacing: 6'-3"

Block-outs: 6" x 8" timber or plastic block-outs.

Rail Lapping (G4 and MGS) – Guardrail is lapped in the direction of travel of the adjacent traffic. Although the chance of snagging on the end of a rail panel during impact is unlikely, reverse lapping has been shown to be problematic for some maintenance activities (e.g. plowing snow). Rail lapping is also an important indicator of quality of workmanship of the installer.

Flexible Systems

High Tension Cable Barriers (HTC) are installed with the cables placed under significant tension (>5000 lbs., depending on manufacturer and temperature) and are typically used in median applications in Arizona, though roadside applications are appropriate. A major advantage of these HTC systems is that the cables remain near the proper height after most normal impacts (with damage limited to a few posts) so that the barrier is still effective. The HTC systems do experience rather large deflections (around 8 ft.) when compared to rigid and semi-rigid barriers; so this should be considered. Post spacing and type, and cable heights and attachment vary with the manufacturer.

The following systems are on ADOT Approved Product List (APL). These systems should be installed in accordance with the manufacturer's recommendations and the ADOT plan requirements.

Brifen Wire Rope Safety Fence (WRSF) 3 and 4 wire by Brifen USA
http://www.brifenusa.com/

Post: Z-shaped post, can be driven or socketed

Cable: Top cable is placed in a center slot at top of the post and cables 2 and 3 and /or 4 are weaved around posts and supported by post pegs.

CASS 3 wire system by Trinity
http://www.highwayguardrail.com/products/cb.html

Post: C post with 3 cables, can be driven or socketed
Cable: Cables are placed in a wave-shaped slot at the center of the post and separated by plastic spacers.

Gibraltar

http://gibraltarus.com/en/highway-cable-barrier

Post: C-channel post, can be driven or socketed

Cable: Cables are attached using a single hair pin and are placed on alternate sides of adjacent posts.

Safence by Gregory Highway Products

http://www.gregorycorp.com/highway_safence.cfm

Post: C-Shaped post, can be driven or socketed

Cable: Cables are inserted in a slot at the center of the post and separated by plastic spacers.

Barrier Design Principles

There are five principles of barrier design that should be addressed for a barrier installation to perform as designed. Some of these principles differ between the MGS and G4 and these differences are noted in the following guidance.

Note that the G4 was tested to NCHRP 350 criteria (and successfully to MASH as a steel post system only); the MGS was tested to MASH with steel and wood post.

Deflection:

The needed deflection distance is based on the results of 62-mph impacts into the guardrail at a 25-degree impact angle by a pickup truck. ADOT Standard Drawings, like C-10.03 and C-10.04, address design offsets for MGS (6'-3" post spacing) in note 5 for both steel and wood posts – example for wood posts is:

5. *Maintain a distance of 59" between w-beam face and rigid objects.*

For the G4 system, typical guidance is 3' deflection distance behind the POSTS of the system (as provided in the ADOT Roadway Design Guidelines – page 300-30).

When these deflection criteria cannot be provided, stiffening of the systems can be achieved by using additional posts at half or quarter post spacing, and nesting the rail elements. The stiffening should be

added gradually so as not to create a hard point. Contact the Roadway Design Section for additional guidance.

For HTC systems, the deflection distance is significantly larger, around 8’ with 10’ post spacing; closer post spacing may reduce the deflection. See Manufacturer Instruction.

Slope in front of Barrier

Barrier, regardless of type, performs best when an impacting vehicle is stable when contact is first made. A vehicle running off the road at high speed and crossing a slope hinge point may become airborne and strike the barrier too high, resulting in over-ride.

High-tension cable barrier may be placed on steeper slopes, but its location on the slope is critical and should be in accordance with the AASHTO Roadside Design Guide and manufacturer's guidelines.

Rigid barriers should NOT be placed where the adjacent slope or roadside slope leading to the barrier face exceeds 10:1.

The MGS system can be placed anywhere on a slope (relative to the slope only) as long as the slope in front of the barrier is flat (10:1 or flatter), and the height would be measured from the ground directly beneath the face of the rail.

ADOT's typical practice is to measure the height of both the MGS and G4 guardrail from the two feet paved extension of the shoulder slope (or from the edge of shoulder with the narrow shoulder exception). Although no construction tolerance is specified, normal construction practice is ±1" from design height.

The G4 System can be placed on slopes as steep as 6:1 with restrictions. When the slopes are steeper than 10:1 and no steeper than 6:1 the face of the

barrier can be either up to 2 ft. from hinge point or at least 12 ft. down the slope from the hinge point.

In locations where G4 is placed up to 2 ft. off the edge of pavement, the height is measured in accordance with Figure 3.

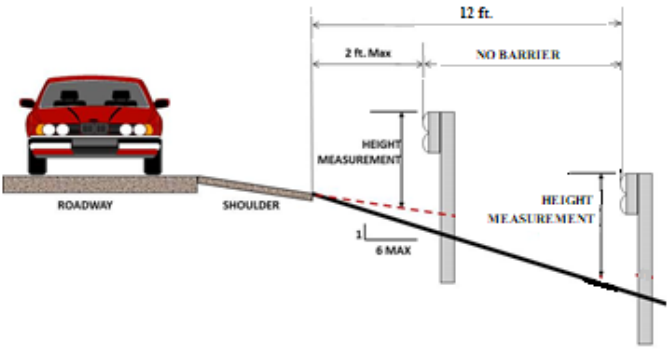

Figure 3: G4 - Location and Height Measurement on a 6:1 Slope

Guardrail in Combination with Curb

Although use of curb in combination with guardrail on high speed facilities is generally not desirable, ADOT has a few situations that provide for special treatment. The use of either Type C or C-1 curbs shown on C-05.10 is allowed, typically for urban freeways – using double 8” blockouts. The use of embankment curb (4” max height) to control erosion (also on C-05.10) is allowed but is required to have guardrail with it. Use of a 6” max vertical curb is shown on the ADOT MGS standard drawings (C-10.04 and C-10.03) which allow for the face of the guardrail from 0” to 7” behind the face of curb as tested to NCHRP 350 TL3; this is typically only used on lower speed facilities.

For low speed, TL-2 (< 45 MPH) applications, the MGS guardrail system has been successfully tested to MASH with the guardrail located 6 feet behind the face of a 6-inch high vertical concrete curb.

Soil Backing

If guardrail is shielding a steep (2:1) embankment, there should be sufficient soil support behind the post to provide for the post's strength. The guardrail typical sections shown on standard drawings show 2' of grading at a slope of 10:1 or flatter behind the post. When this 2' cannot reasonably be provided for the MGS system, ADOT allows for the posts to be set at the slope break point – with no modifications. Another design is being reviewed by ADOT management – to move the face of the **post** 1' down the 2:1 slope using an 8' long post; contact the Roadway Design Group for further information.

Flare Rate

Sometimes it is advantageous to move the barrier farther away from the edge of traffic. ADOT preferred placement is to install the barrier parallel to the roadway, at a 2' offset from the shoulder. However, if the barrier is flared, two features are considered: the slope in front of the barrier must be 10:1 or flatter; and the flare rate satisfies the allowable values given in the AASHTO RDG as shown in Table 3 and Table 4 – Shyline.

Table 3: Flare Rates

Design Speed		Flare Rate for Barrier Inside Shy Line	Flare Rate for Barrier at or Beyond Shy Line	
km/h	[mph]		A	B
110	[70]	30:1	20:1	15:1
100	[60]	26:1	18:1	14:1
90	[55]	24:1	16:1	12:1
80	[50]	21:1	14:1	11:1
70	[45]	18:1	12:1	10:1
60	[40]	16:1	10:1	8:1
50	[30]	13:1	8:1	7:1

Notes:
A = Suggested maximum flare rate for rigid barrier system.
B = Suggested maximum flare rate for semi-rigid barrier system.
The MGS has been tested in accordance with NCHRP Report 350 TL-3 at 5:1 flare.
Flatter flare rates for the MGS installations also are acceptable. The MGS should be installed using the flare rates shown or flatter for semi-rigid barriers beyond the shy line when installed in rock formations.

Table 4: Shy Line Offset[4]

Design Speed (mph)	Shy-Line Offset (Ls)	Design Speed (mph)	Shy-Line Offset (Ls)
80	12	50	6.5
75	10	45	6
70	9	40	5
60	8	30	4
55	7		

[4] AASHTO Roadside Design Guide, 4th Edition, 2011, Table 5-7

Length of Need

Length of Need (L) is defined as the length of fully effective barrier needed in ADVANCE (upstream) of the hazard to prevent a vehicle that has left the roadway from reaching the shielded hazard. It is determined by the designer selecting the appropriate variables as shown in Figure 4 and calculating the LON (the "L" value).

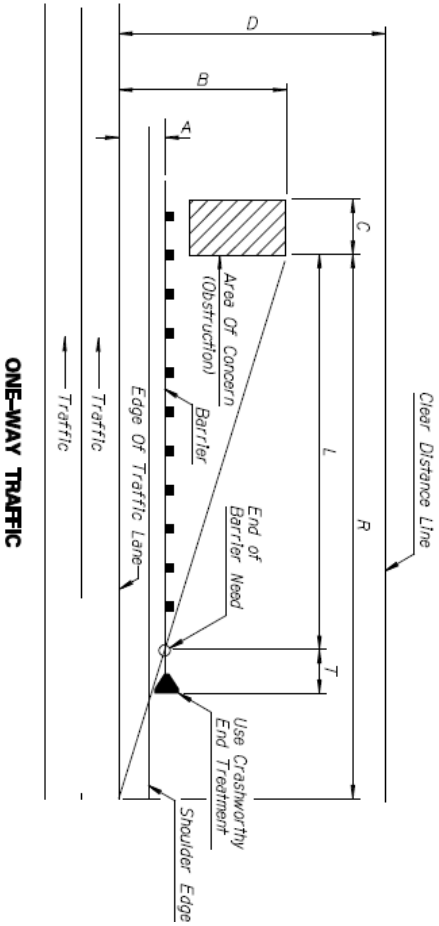

Figure 4: Approach Barrier Layout

The values for R - the Runout Length - are shown in Table 5. They also can be used in a quick check in the field to verify if the length of barrier is adequate as described below.

Table 5: Runout Lengths

Table 305.8 Roadside Barrier Runout Length				
Design Speed (mph)	Traffic Volume (ADT)			
	Over 10,000	5,000-10,000	1,000-5,000	Under 1,000
	Length R(ft)	Length R(ft)	Length R(ft)	Length R(ft)
80	470	430	380	330
75	415	380	335	290
70	360	330	290	250
65	330	290	250	225
60	300	250	210	200
55	265	220	185	175
50	230	190	160	150
45	195	160	135	125
40	160	130	110	100
35	135	110	95	85
30	110	90	80	70

2012 EDITION ROADWAY DESIGN GUIDELINES PAGE 300-33

LON Field Check

A guide of how to perform a check in the field to verify that adequate length of barrier is provided follows:

Stand on the edge line directly opposite the upstream end of the hazard (Figure 5).

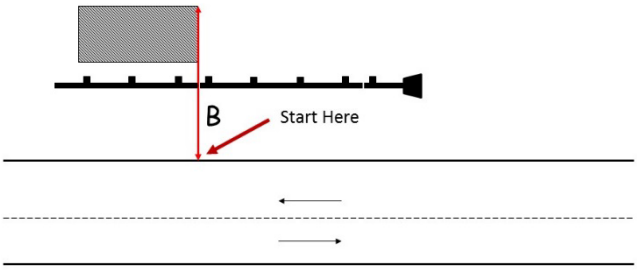

Figure 5: Stand at Upstream End of Hazard

Pace off upstream the appropriate runout length from Table 5 (Figure 6).

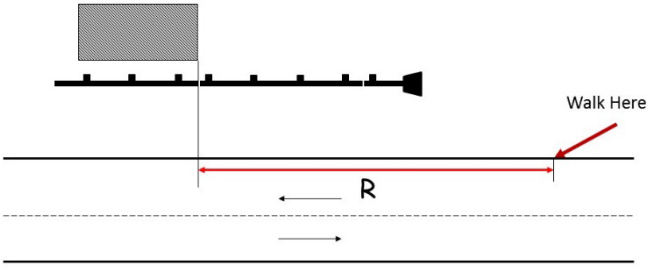

Figure 6: Pace the runout length

From that point, turn and look at the back of the hazard (if the hazard extends a significant distance away from the travel way – such as a river – limit the back of hazard to the clear zone - D) (Figure 7).

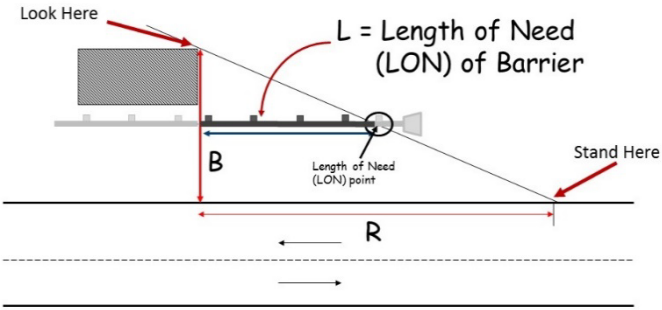

Figure 7: Line of Sight to back of hazard

If the proposed (or actual) guardrail installation crosses (or is close to) that line of sight, then the area is adequately covered.

LON may need to be checked for the opposing direction of traffic as well – this time the pacing would be from the downstream end of the hazard and would be along the centerline.

Stand on the centerline directly opposite the downstream end of the hazard (Figure 8).

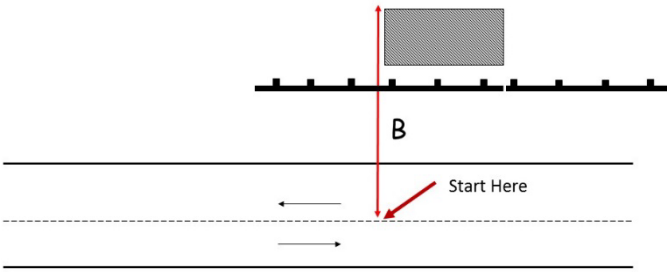

Figure 8: Stand at downstream End of hazard

Pace off downstream the appropriate runout length from Table 5 (Figure 9).

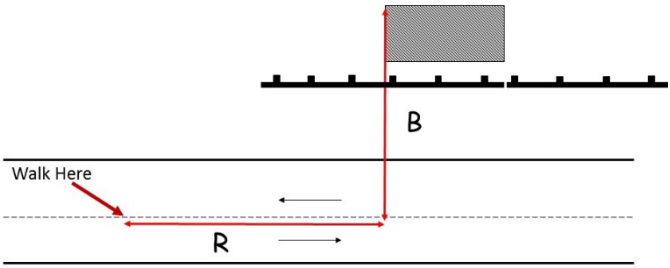

Figure 9: Pace the runout length

From that point, turn and look at the back of the obstacle (if the hazard extends a significant distance away from the travel way – such as a river – limit the back of hazard to the clear zone – measured from the centerline) (Figure 10).

If the proposed (or actual) guardrail installation crosses (or is close to) that line of sight, then the area is adequately covered.

Special attention should be given so that **ALL** hazards in the immediate vicinity that would warrant shielding have been appropriately addressed. There

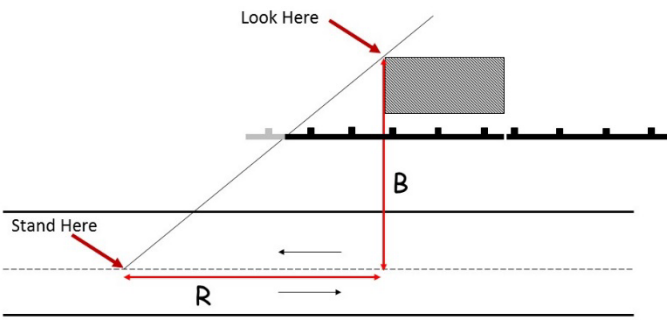

Figure 10: Line of Sight to back of obstacle

may be other warranting hazards near an obvious hazard (like a transverse 2:1 bridge embankment behind a bridge pier) that should be considered in determining adequate length of barrier to shield all appropriate hazards.

Gaps

Short gaps between runs of barrier are undesirable. In general, gaps of less than 200 feet between barrier termini should be connected into a single run. Exceptions may be necessary for access or other reasons – coordinate with appropriate staff.

Terminals and Crash Cushions

Terminals

Crashworthy terminals serve two functions: develop anchorage for guardrail for downstream impacts; and are "crashworthy" when hit on the end. There are two primary w-beam terminal types: non energy-absorbing and energy-absorbing systems. However, ADOT guidance is that tangent terminals (all of which are energy-absorbing) should be used whenever practical.

Terminal Types and Selection

Non energy-absorbing terminals serve both functions: develop anchorage and prevent spearing by the rail element. However, since they do not absorb significant energy on end-on impacts, they do not significantly reduce vehicle speed, regardless of angle. They should only be used when the Length of Need (L) – discussed earlier - for the shielded hazard(s) have been met. Crash-testing has shown that the pickup truck traveling at 62 mph and impacting the terminal head-on can travel 150 feet or more behind the guardrail system, as illustrated in Figure 11 below.

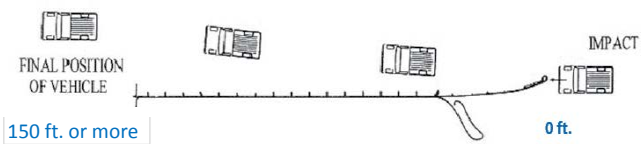

Figure 11: Non-Energy-absorbing Terminal

Therefore, where a non-energy-absorbing terminal is used, it is important to verify that the grading is

completed as shown on ADOT's Standard Drawings and that the LON has been provided - for parallel installations, the LON should be at least 150 feet.

Energy-absorbing terminals. Crash testing has shown that an energy-absorbing terminal can stop an impacting pickup truck, travelling at 62 mph, in about 50 feet when struck head-on (Figure 12) and thus are used at locations that do not have sufficient traversable area behind the guardrail installation.

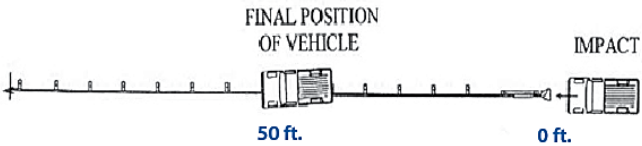

Figure 12: Energy-absorbing Terminals

For narrow shoulders, ADOT recommends flaring the guardrail at a 30:1 flare rate to attain a 5' offset ahead of the end terminal if practical.

Because non-energy-absorbing and energy-absorbing terminals function differently by design, it is critically important that the correct type of terminal be used for the particular site conditions as it relates to adequate LON and availability of proper grading (as discussed below). Figure 13 presents a flow chart to provide guidance in determining if the correct terminal type has been specified.

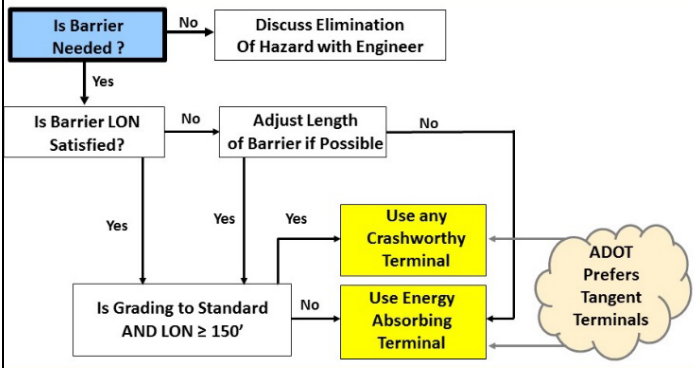

Figure 13: Type of Terminal Selection

Approved Guardrail Terminal Systems as of October 2017

Slotted Rail Terminal (SRT-350 HBA)

For current details of this system, see Manufacturer's Installation/Assembly Manual at this website:

http://www.highwayguardrail.com/products/et-srt350.html

Test Level: NCHRP 350: TL-3

Distinguishing Characteristics:

- No impact head.
- Rail connected to post 1
- Strut between posts 1 and 2.
- Cable anchor bracket - solid attachment to rail
- Longitudinal slots on w-beam rail element.
- Slot Guards on downstream end of slots.
- Posts 1 & 2 are steel hinge posts; posts 3-6 are wood CRT posts. First post beyond the terminal proper (post 7) must be a CRT post. See manufacture's installation manual.
- Post 1 offset 4'-0" on a straight-line taper

How it works: This is a non-energy-absorbing terminal. The slots in the slotted rail design allow the rail to collapse at engineered locations when struck end-on at most (including head-on) impact angles rather than penetrate a vehicle. For side impacts beyond the LON point (post 3), the vehicle should be redirected in front of the rail.

MASH Sequential Kinking Terminal (MSKT)

For current details of this system, see Manufacturer's Installation/Assembly Manual at this website:

http://roadsystems.com/fleat.html

Test Level: MASH: TL-3

Distinguishing Characteristics:

- Square impact head.
- Enclosed feeder chute (SKT engraved)
- Post 1 Tube top section, W6x15 bottom section
- Post 2 W6x9 hinge post
- Posts 3 – 8 standard W6x9 6 ft. posts
- Other features same as the previously approved SKT 350 – see below.

How it works: This is an energy-absorbing system. The energy of a vehicle in a head-on impact is absorbed by the impact head being forced down the rail elements deforming them in short kinks. This is a compression based system. For higher angle hits on the nose, the vehicle breaks away the end and passes through and behind the guardrail. For side impacts beyond the LON point (post 3), the vehicle should be redirected in front of the rail.

SoftStop

For current details of this system, see Manufacturer's Installation/Assembly Manual at this website:

http://www.highwayguardrail.com/products/SoftStop.html

Test Level: MASH: TL-3

Distinguishing Characteristics:

- Narrow, rectangular impact head and chute.
- Anchor post in front of the impact head (post #0)
- Post 1 - 4'-9½" SYTP (Steel Yielding Terminal Post)
- Post 2 6' SYTP
- Posts 3-8 - standard W6x9 6ft. long posts
- End rail element is split, passes through the impact head, and is connected (with two bolts) to post 0 (the foundation post)

How it works: This is an energy-absorbing system. The energy of a vehicle in a head-on impact is absorbed as the impact head is forced down the rail, crushing the rail as it goes through the chute. This is a tension based system; there is no cable release. For higher angle hits on the nose, the vehicle pushes over the guardrail and passes through and behind the guardrail. For side impacts beyond the LON point (16 ½' from end), the vehicle should be

redirected in front of the rail. Only available for MGS system.

Flared Energy-absorbing Terminal (FLEAT)

For current details of this system, see Manufacturer's Installation/Assembly Manual at this website:

http://roadsystems.com/fleat.html

Test Level: NCHRP 350: TL-3

Distinguishing Characteristics:

- Rectangular impact head.
- Rail has 5 slots (1/2" x 4" long) on both the top and bottom corrugations of the w-beam section. (There may be 3 additional (1/2"x4" long) slots in the valley of the rail – for use with the SKT)
- Steel and wood post options
- End of W-beam rail offset 4'-0" per Standard Drawing; was successfully tested with as little as 2'-6" offset.

How it works: This is an energy-absorbing terminal, which is also a flared terminal. The energy of a vehicle in a head-on impact is absorbed by the impact head being forced down the rails deforming them in a tight curl extruding on the traffic side of the guardrail. This is a compression based system.

For higher angle hits on the nose, the vehicle breaks away the end and passes through and behind the guardrail. For side impacts beyond the LON point (post 3), the vehicle should be redirected in front of the rail.

NOTES:

- On two lane highways with two way traffic, crashworthy end treatments are typically used on both the approach and trailing ends of guardrail runs.
- On four-lane divided highways, non-crashworthy end treatments (End Anchor, C-10-08) are typically used on the departure ends if they are outside the clear zone for opposing traffic. New guidance on the use of the end anchor calls for the 26.5’ long end anchor to be added at the end of the guardrail, 3.2’ of which can be applied to the length of barrier need.
- Oftentimes no rail is needed on the departure ends of bridges on divided roadways unless site specific circumstances require additional barrier.

Existing Guardrail Terminal Systems

The following systems listed here are not currently on ADOT's APL and are shown here for identification purposes only. ADOT guidance is that existing terminals that do not meet NCHRP 350 criteria should be replaced with MASH compliant terminals as part of new construction projects.

Sequential Kinking Terminal (SKT)

(Identification ONLY – NOT ON APL)

For current details of this system, see Manufacturer's Installation/Assembly Manual at this website:

http://roadsystems.com/skt.html

Test Level: NCHRP 350: TL-3

Distinguishing Characteristics:

- Square impact head.
- Steel and wood post options.
- Cable anchor bracket requires eight special shoulder bolts to connect to rail element.
- Has a feeder chute (channel section that surrounds the rail) which gets wider at the downstream end.
- Rail has 3 (1/2" x 4" long) slots in the valley of the rail (There may be 5 additional slots (1/2" x 4" long) on both the top and bottom corrugations of the w-beam section – this is for interchangeability with the FLEAT)

ET 2000
(Identification ONLY – NOT ON APL)

Extruder Terminal ET-Plus
(Identification ONLY – NOT ON APL)

For current details of this system, see Manufacturer's Installation/Assembly Manual at this website:

http://www.highwayguardrail.com/products/etplus.html

Test Level: NCHRP 350: TL-3

Distinguishing Characteristics:

- Square (ET2000)/Rectangular (ET Plus) impact head.
- Rectangular holes in 1st rail allow for attachment of the tabs of the cable anchor bracket.

Terminal Grading Details

A terminal is most likely to perform best when a vehicle is stable at the moment of impact. There are three grading areas around guardrail terminals to help achieve the desired performance: advance, adjacent, and run-out distance; these are highlighted on Figure 14.

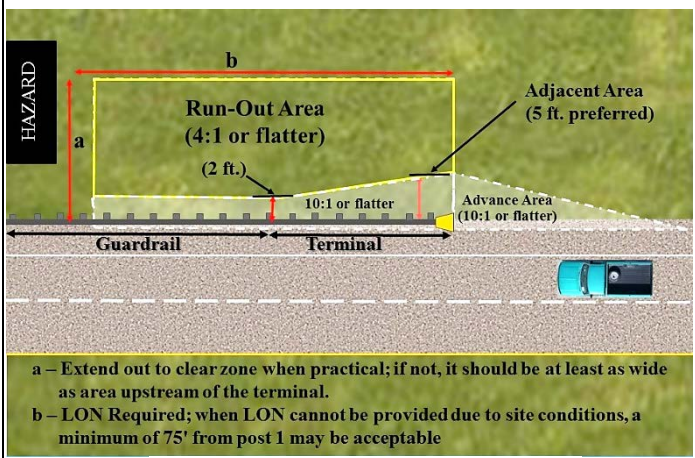

Figure 14: Terminal Grading Areas

When a grading platform is built, it should be designed and constructed to blend with the original embankment. Note that the areas approaching and immediately adjacent to the terminal should be 10:1 or flatter, as shown on ADOT Standard Drawings, an example of which (R-10.80 for a SOFT STOP) is shown in Figure 15.

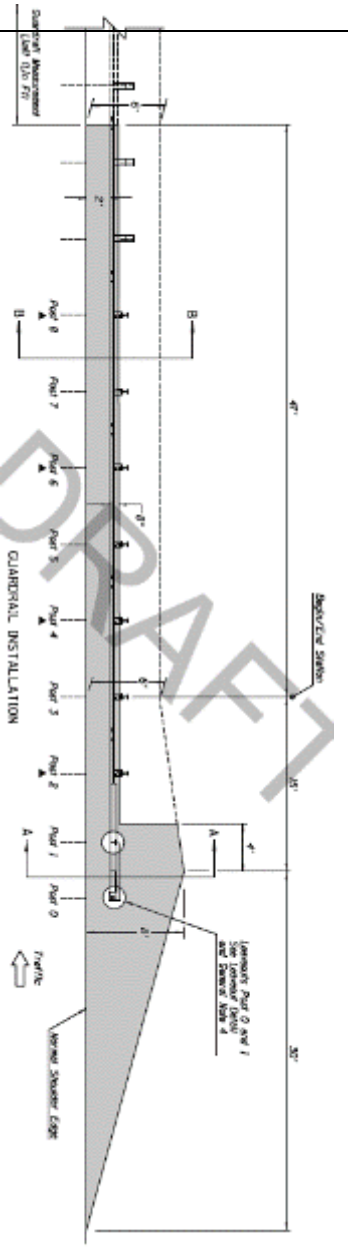

Figure 15: Example Grading - Softstop

A second consideration for terminal grading is the stub height criteria, shown in Figure 16. Any hardware remaining after the vehicle passes through should not exceed this stub height criteria.

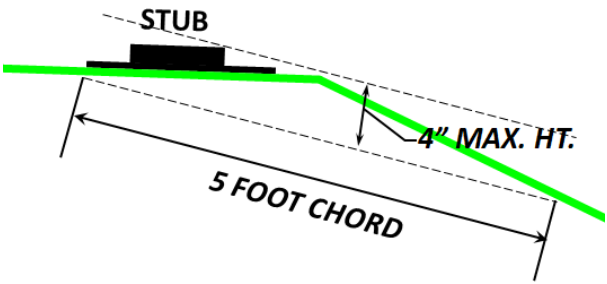

Figure 16: Stub Height Criteria

Terminal Installation

The following items should be reviewed for a proper installation:

- Grading should be appropriate
- Stub height criteria should be satisfied
- All parts should be for the specific model being installed
- The top of post 1 should be able to separate from its base for end-on impacts – to release the cable
- The bearing plate on the cable at post 1 should be properly oriented and restrained to remain in that position. The bearing plate should not be buried.
- For energy-absorbing, compression based systems with impact heads:
    - The rail panel should be firmly seated into the head
    - The system should be on a straight line for its full length; post 1 is typically offset from the normal line of guardrail. See standard drawing for offset requirements
    - The cable anchor bracket to the rail is the correct part – must allow for the release of the anchor bracket when hit by the impact head
    - No bolt through the rail at post 1.
    - Rail to post bolts only when called for, and on the correct side of the post.
    - The impact head securely attached to post 1 – (again, no post to rail connection)
    - The top of the impact head should be parallel with the top of the rail

- Anchor cable should be tightened appropriately.

It is a challenge to remember all the intricacies of proper installation of the multitude of systems and models within each system. We cannot over-emphasize the importance of having the **MANUFACTURER'S INSTALLATION MANUAL AND SHOP DRAWINGS** on site to be followed for every installation.

Crash Cushions

Crash Cushions are generally used to shield a point obstacle or where space is limited.

There are many approved crash cushions on ADOT's APL for permanent installations.

QuadGuard, Quadguard II, and Quadguard Elite - all NCHRP 350; Quadguard M10 – MASH

For current details of this system, see Manufacturer's Installation/Assembly Manual at this website:

http://www.energyabsorption.com/products/products_quadguard2_crash.asp

How it works: Hex-foam cartridges (or HDPE cartridges that self-restore for the Elite) that crush upon impact absorb the energy of the impacting vehicle for end-on hits. Specially fabricated side panels having four corrugations mounted on diaphragms slide back on a single track when struck end-on, but redirect the vehicle in side impacts.

- Pad requirement
- The system is available at various widths.
- 2 types of cartridges (and two materials, depending if Elite) – number and placement dependent on speed - refer to installation manual.

Trinity Attenuating Crash Cushion (TRACC) – NCHRP 350

For current details of this system, see Manufacturer's Installation/Assembly Manual at this website:
http://www.highwayguardrail.com/products/tracc.html

How it works: Consists of a series of w-beam fender panels and an impact face which absorbs energy by cutting metal plates on the top sides of the guidance tracks when forced backward in an end on impact. Requires Paved Pad.

TAU-II and TAU II-R (self-restoring) - NCHRP 350

For current details of this system, see Manufacturer's Installation/Assembly Manual at this website:
http://www.barriersystemsinc.com/tau-ii-crash-cushion

How it works: Energy-absorbing elliptical cartridges crush (and are reusable for the II-R) upon impact. Thrie beam panels slide back when struck end-on and redirect vehicles when impacted on the side. Anchored at the front and rear of system.

- Pad requirement
- The system is available at various widths.
- 2 types of cartridges – number and placement dependent on speed; refer to installation manual.

SCI Smart Cushion Innovation – MASH

For current details of this system, see Manufacturer's Installation/Assembly Manual at this website: http://workareaprotection.com/attenuators/

How it works: Internal cables and a hydraulic cylinder provide resistance to stop a vehicle, within test criteria speed, before it reaches the end of the cushion's usable length. Side impacts are redirected by the steel panels.

- Pad requirement
- General repair parts consist of replacement of shear pins.

Sand Barrels - NCHRP 350

Sand barrels are included as Category V-3 in the ADOT APL. Although relatively inexpensive, they are not generally used where they are likely to be impacted. However, there may be special circumstances where they would be the most appropriate treatment – such as the photo below. Available for shielding obstacles of varying widths.

How it works: The different approved systems function in the same manner: sand-filled plastic barrels decelerate an impacting vehicle by transferring the vehicle's momentum to the variable masses of sand in the barrels that are hit. The systems are non-redirectional.

The amount of sand in each barrel, with appropriate anti-freezing treatment, must be placed as designated in the product's installation manual.

The last barrel next to any hard spot needs to be offset 30" to prevent any "coffin corner" impacts.

Transitions - from W-beam to Rigid Barrier/Bridge Rail

When a semi-rigid barrier precedes a rigid barrier, a gradual stiffening transition typically occurs between the two systems. Details for the transition are shown on ADOT Standard Drawings C-10.30 for wood posts and C-10.31 for steel posts.

Regardless of the system (G4 or MGS), transition details include four essential elements, as follows and illustrated on Figure 17.

1. A strong structural connection of the steel beam to the concrete (to provide for tension continuity);
2. Additional, and typically, larger posts;
3. Nested metal beam; and
4. A curb or rubrail (or flared back bridge parapet) is usually used to reduce snagging of the wheel on the rigid barrier. Note that any curb is part of the transition design (and does not violate any guidance for standard runs of guardrail).

Although the Standard Drawings may not be applicable to all situations encountered in the field, including these four elements might provide an acceptable transition; coordinate with the appropriate design staff.

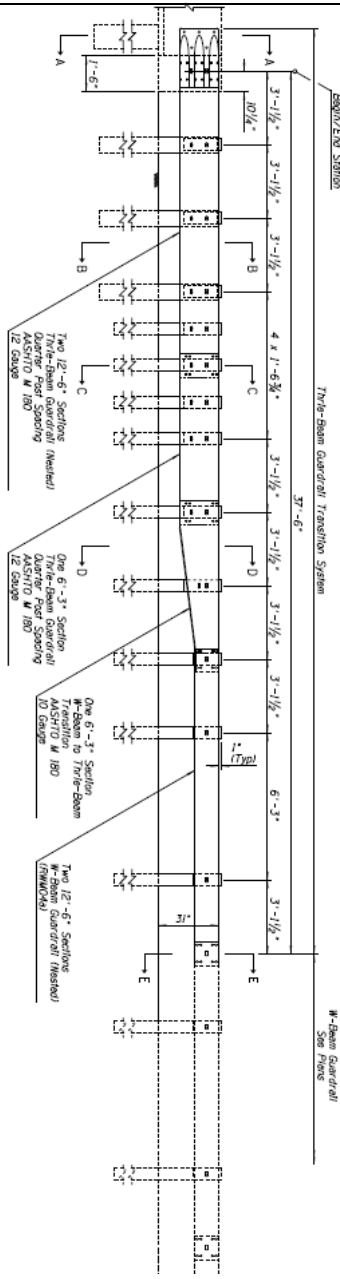

Figure 17: MGS Transition Details

Special Designs

Omitted Post:

As with any special design, omitting a post should only be used in special circumstances and may only be omitted in a standard run of guardrail (not in the transition section, terminal, etc.).

The **MGS** has been developed where single posts may be omitted in runs of MGS w-beam guardrail without any modifications to the typical MGS system (i.e. no weakened posts, no nested rail elements, no special posts, etc.) but the following should be considered:

1. The length of w-beam guardrail between omitted posts should be greater than or equal to 50'.
2. Where posts are omitted in the vicinity of guardrail special designs such as terminals, end anchors, transitions, etc., special consideration should be given to where the omitted post is located. The following is ADOT guidance: not located within (1) 37.5' of downstream anchor; (2) 31.25' of terminals with offsets of 1' or more; (3) 12.5' of terminals with 0' offset; (4) 18.75' of transition to concrete barrier; and (5) 43.75' of long span system (described next).
3. MGS omitted post design is not to be used across spillways or downdrains – use leaveouts in the concrete pavement per Standard Drawing C-10.77

Where a single post is omitted in a G4 installation, the w-beam guardrail needs to be stiffened by "nesting" w-beam rail elements over the clear span

Figure 19: G4(1) Nested Rail (Nesting)

and extending the nested rail(s) at least 6’-3” on either side of the omitted post. An example is shown in Figure 18. The splices of each of the nested rails must be at the same location, as shown in Figure 19.

Long Span Guardrail System:

The Long Span Guardrail may be used to span low-fill culverts (or other impediments to driving posts) in lieu of attaching posts to the top of these structures (as per C-10.07) with a maximum of 3 posts omitted. As with the Omitted Post design, the Long Span should only be used in a standard run of guardrail (not in the transition section, terminal, etc.). Where the Long Span design is used, it is important to verify no fixed object is protruding more than 4” above the ground within the deflection area (8’ for the MGS design) behind the system, as well as the spacing requirements itemized under the omitted post above.

The MGS long span design does not require any nested rail element; however, three posts on each side of the span (25-foot maximum) are weakened to reduce any snagging potential, as shown in ADOT Standard Drawing C-10.06.

As an alternative, or where the span is greater than 25’, ADOT Standard Drawing C-10.07 provides for direct attachment of the posts to the culvert top.

Two considerations with this design are:

- Additional stiffness of the system; and
- Potential damage to the culvert structure resulting from guardrail impacts.

Leaveouts for Posts in Structural Pavement

In order for a post to move backward before failing (as intended), the support around the post should not be rigid; therefore leave-outs should be provided in any structural pavement surrounding a post. This is shown on Standard Drawing C-10.77, the detail being shown in Figure 20. The top of the opening around the post may be filled with a low strength grout (CLSM), but no more than 3”-6” thick.

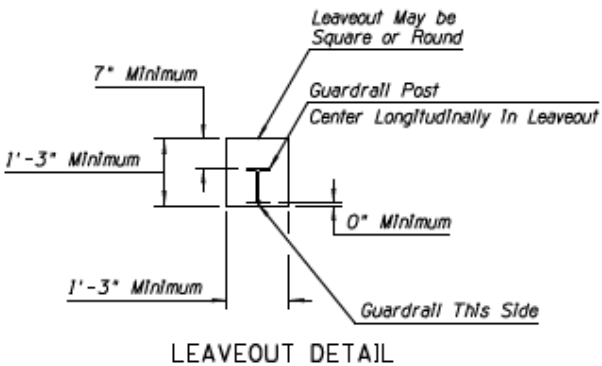

Figure 20: Guardrail Post in Structural Pavement

Extra Blockouts

A total of 16” blockout width is allowed – for either guardrail system - for as many posts as desired. A total of 24” blockout width is allowed – for either guardrail system –at one post only (within 50’ of another 24” blockout).

Note: 16” blockout width is required when using guardrail above a C or C-1 curb. When multiple wood blockouts are used, they should be nailed together with the retainer strap as shown on Standard Drawing C-10-05.

Turnout Conflicts (in runs of guardrail)

Leaving an opening in a standard run of guardrail for a turnout conflict like a driveway or access road presents a difficult situation for the designer. A special design was developed where the guardrail was turned around the curve, but hung on special weakened wood posts, and a special end anchor was installed. When this detail is called for, the weakened wood posts must be used throughout the radius, and the bolt at the middle post for sharp radii must be removed.

Guardrail Posts in Rock

Where rock is encountered at a single guardrail post, the appropriate Omitted Post design may be used for either the MGS or the G4. Where rock is encountered at 3 or fewer guardrail posts, the MGS Long Span design may be used. Where rock is encountered at more than 3 guardrail posts, the posts should be placed in cored holes as shown on Standard Drawing R-10-09, a detail of which is shown in Figure 21.

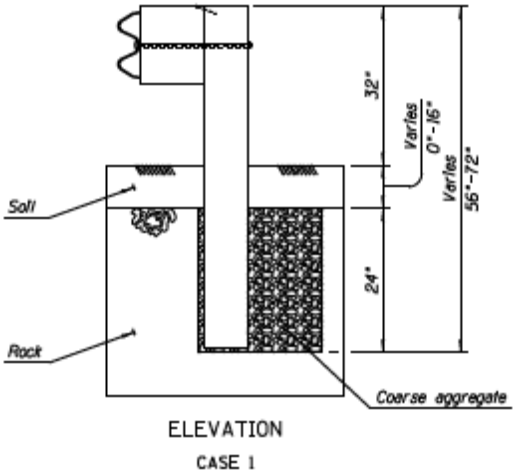

Figure 21: Guardrail Post in Rock

Ref: AASHTO Roadside Design Guide, 4th Edition, 2011, Figure 5-51.

Transitions from G4 to MGS

For situations where there is a need to transition between the two systems, G4 (28” high) and MGS (31” high), ADOT Standard Drawing R-10.38 provides the design details.

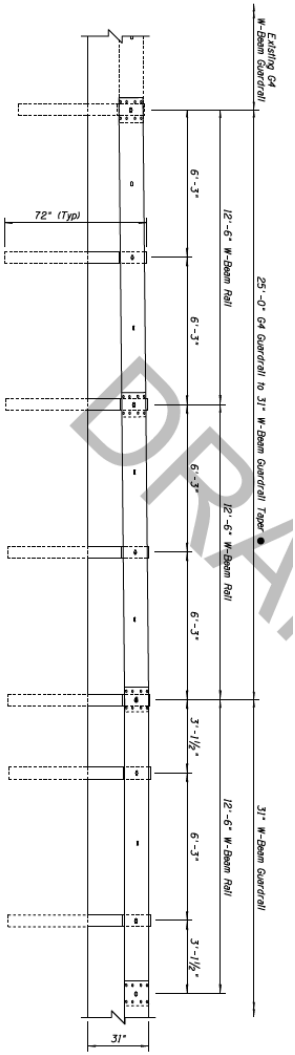

Figure 22: G4 to MGS Transition Design

Maintenance

Guardrail systems should be kept in reasonable working condition if they are to function as designed. Some deterioration occurs as a result of crash damage and environmental degradation. Much of this wear can be considered “cosmetic” and may not measurably affect barrier performance. However, some kinds of damage may degrade performance such as those listed below in the Longitudinal Barrier Damage and Terminal Damage sections. Repairs to these types of damage should be made in a reasonable time frame. Identified damaged barrier sites should be assessed, prioritized, and scheduled for repairs.

General Guidelines

The following are General Guidelines for maintenance:

- The area of damage should be delineated to warn the motorists as soon as practical after the discovery/notification of the impact. For some types of damage, such as a ruptured rail or a terminal left in a condition such that it does not function and/or is not crashworthy, repair should be scheduled as soon as practical. To mitigate a blunt rail end condition, it is recommended that the rail be unbolted from several posts and the leading end dropped to the ground - to avoid exposing a blunt end condition until the installation can be repaired.

- Damaged guardrail should be reviewed as soon as reasonable to determine the scope of repair based on individual site conditions.
- Consideration should be given to upgrading existing or damaged roadside safety devices not meeting current criteria; at a minimum, as described in the ADOT guidance provisions.

National Guidelines for W-Beam

The following pages consist of excerpts from NCHRP Report 656, Criteria for the Restoration of Longitudinal Barrier. Note that the types and degree of damage to the barrier itself and to barrier terminals is prioritized as High, Medium, or Low. These rankings, along with the perceived likelihood of a second impact - at the crash-testing criteria of high speed, high angle - in the same location can be used to set repair priorities**. It should be noted that these evaluations were based on analysis of the G4 system, not the MGS system.**

Repair priority scheme

Priority Level	**Description**
High	A second impact results in unacceptable safety performance including barrier penetration and/or vehicle rollover.
Medium	A second impact results in degraded but not unacceptable safety performance.
Low	A second impact results in no discernible difference in performance from an undamaged barrier.

W-beam Barrier Repair Threshold

Damage Mode: Post and Rail Deflection

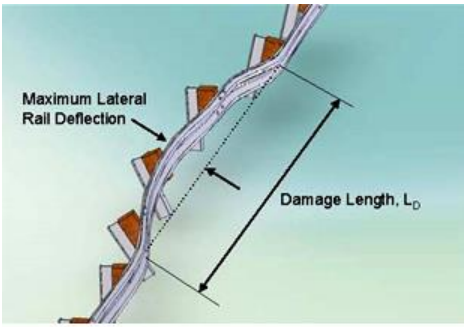

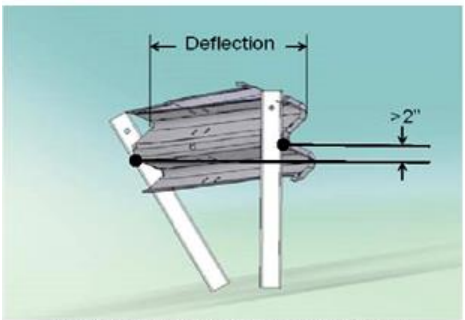

(Weak Post W-Beam Shown Only for Clarity.
Each measurement taken at rail middle fold)

Relative Priority	Repair Threshold
High	One or more of the following thresholds: • More than 9 inches of lateral deflection anywhere over a 25 ft. length of rail. • Top of rail height 2 or more inches lower than original top of rail height.
Medium	6-9 inches lateral deflection anywhere over a 25 ft. length of rail.
Low	Less than 6 inches of lateral deflection over 25 ft. length of rail.

W-beam Barrier Repair Threshold

Damage Mode: Rail Deflection Only

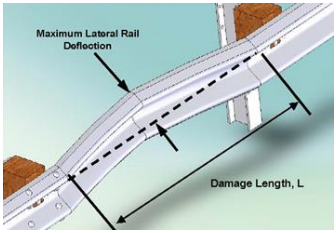

Relative Priority	Repair Threshold
Medium	6-9 inches of lateral deflection between any two adjacent posts. Note: For deflection over 9 inches, use post/rail deflection guidelines.
Low	Less than 6 inches of lateral deflection between any two adjacent posts.

W-beam Barrier Repair Threshold

Damage Mode: Rail Flattening

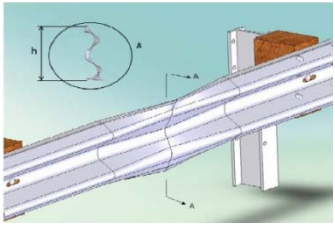

Relative Priority	Repair Threshold
Medium	One or more of the following thresholds: • Rail cross-section height, h, more than 17” (such as may occur if rail is flattened). • Rail cross-section height, h, less than 9” (such as a dent to top edge).
Low	Rail cross-section height, h, between 9 and 17 inches.

W-beam Barrier Repair Threshold

Damage Mode: Posts Separated from Rail

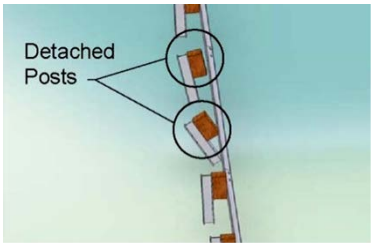

Note:

1. If the blockout is not firmly attached to the post, use the missing blockout guidelines.
2. Damage should also be evaluated against post/rail deflection guidelines.

Relative Priority	Repair Threshold
Medium	One or more of the following thresholds: • 2 or more posts with blockout attached with post-rail separation less than 3 inches. • 1 or more post with post-rail separation which exceeds 3 inches.
Low	1 post with blockout attached with post-rail separation less than 3 inches.

W-beam Barrier Repair Threshold

Damage Mode: Missing/Broken Posts

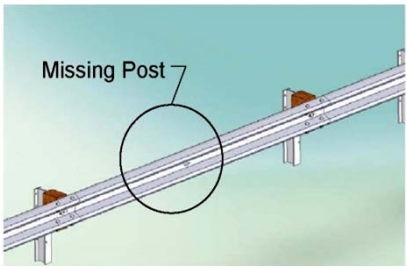

Relative Priority	Repair Threshold
High	One or more posts: • Missing • Cracked across the grain • Broken • Rotten • With metal tears

W-beam Barrier Repair Threshold

Damage Mode: Missing Blockout

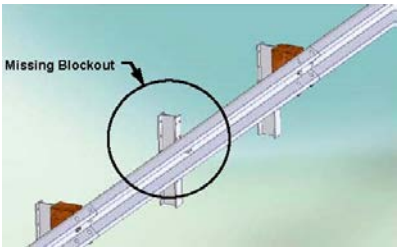

Relative Priority	Repair Threshold
Medium	Any blockouts • Missing • Cracked across the grain • Cracked from top or bottom blockout through post bolt hole • Rotted

W-beam Barrier Repair Threshold

Damage Mode: Twisted Blockout

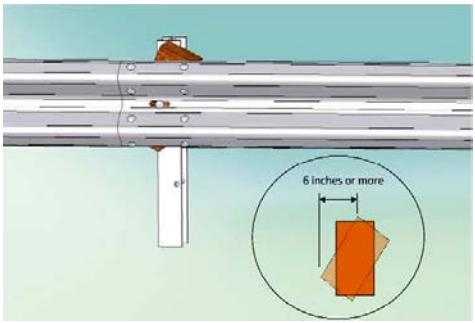

Relative Priority	Repair Threshold
Low	Any misaligned blockouts, top edge of block 6 inches or more from bottom edge. Note: Repairs of twisted blockout are relatively quick and inexpensive

W-beam Barrier Repair Threshold

Damage Mode: Non-Manufactured holes

(such as crash induced holes, lug-nut damage, or holes rusted-through the rail)

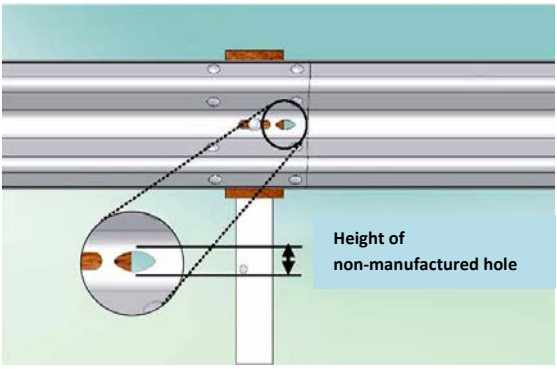

Relative Priority	Repair Threshold
High	One or more of the following thresholds: • More than 2 holes less than 1” in height in a 12.5’ length of rail. • Any holes greater than 1” height. • Any hole which intersects either the top or bottom edge of the rail.
Medium	1-2 holes less than 1” in height in a 12.5’ length of rail.

W-beam Barrier Repair Threshold

Damage Mode: Damage at Rail Splice

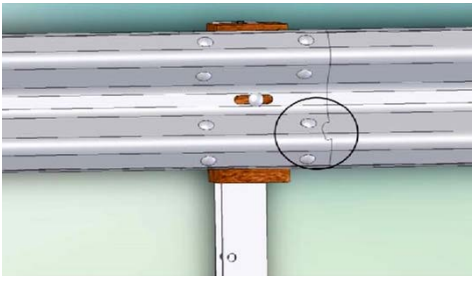

Relative Priority	Repair Threshold
High	More than 1 splice bolt: • Missing • Damaged • Visibly missing any underlying rail • Torn through rail
Medium	1 splice bolt: • Missing • Damaged • Visibly missing any underlying rail • Torn through rail

W-beam Barrier Repair Threshold

Damage Mode: Vertical Tear

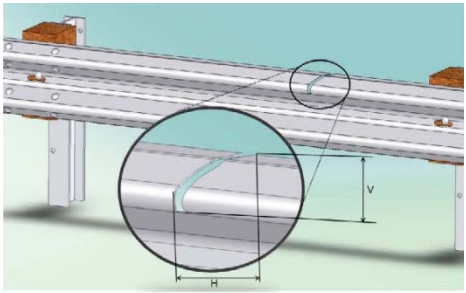

Relative Priority	Repair Threshold
High	Any length vertical (transverse) tear

W-beam Barrier Repair Threshold

Damage Mode: Horizontal Tear

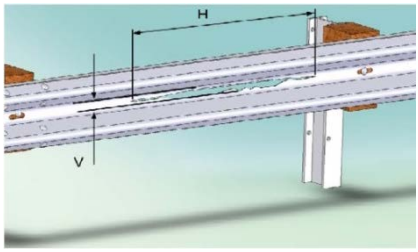

Relative Priority	Repair Threshold
Medium	Horizontal (longitudinal) tears greater than 12 inches long or greater than 0.5 inches wide. Note: for horizontal tears less than 12 inches in length or less than 0.5 inches in height, use the non-manufactured holes guidelines.

Terminal Repair Threshold

Damage Mode: Damage End Post

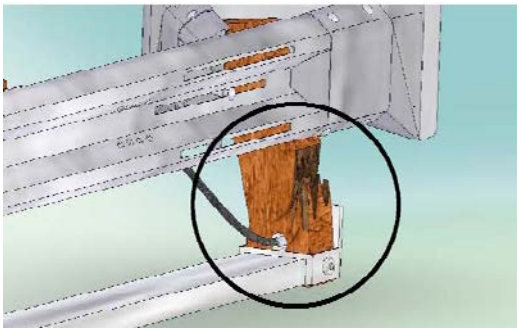

Relative Priority	Repair Threshold
High	Not functional (sheared, rotted, cracked across the grain)

Terminal Repair Threshold

Damage Mode: Anchor Cable

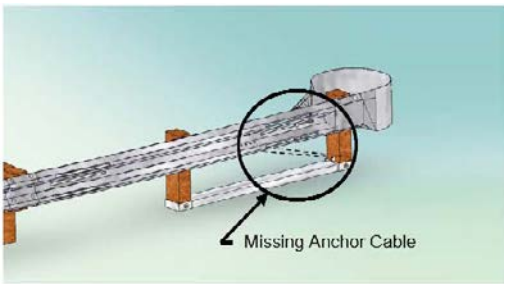

Relative Priority	Repair Threshold
High	Missing

Terminal Repair Threshold

Damage Mode: Anchor Cable

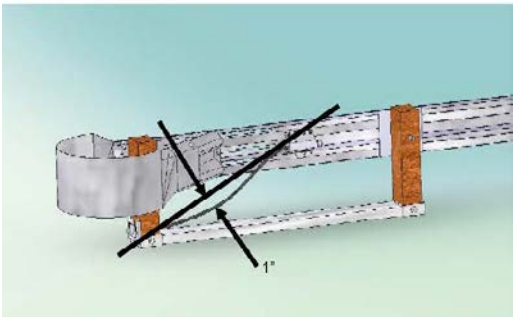

Relative Priority	Repair Threshold
Medium	More than 1” of movement when pushed down by hand

Terminal Repair Threshold

Damage Mode: Cable Anchor Bracket

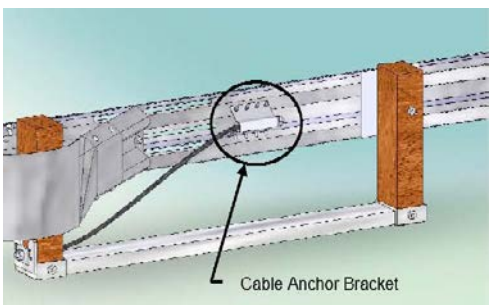

Relative Priority	Repair Threshold
Medium	Loose or not firmly seated in rail

Terminal Repair Threshold

Damage Mode: Stub Height

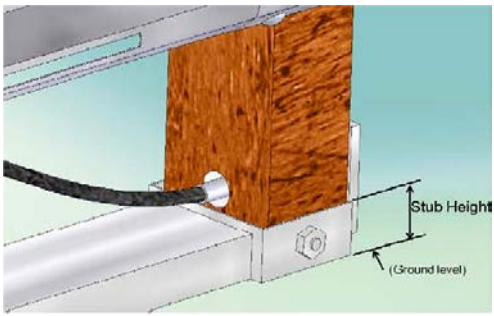

Relative Priority	Repair Threshold
Medium	Height which exceeds 4”

Terminal Repair Threshold

Damage Mode: Lag Screws (Energy-absorbing Terminals Only)

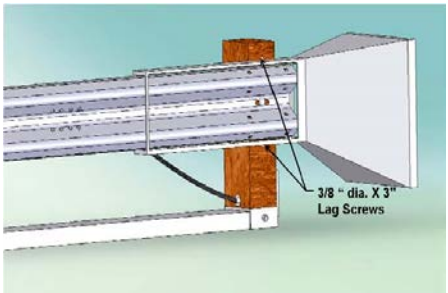

Relative Priority	Repair Threshold
High	Missing or failed lag Screws

Terminal Repair Threshold

Damage Mode: Bearing Plate

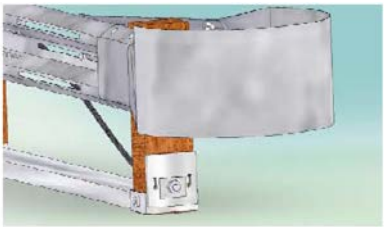

(Correct Bearing Plate)

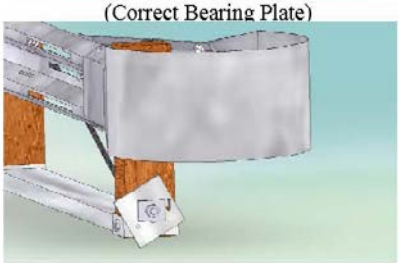

(Misaligned Bearing Plate)

Relative Priority	Repair Threshold
Medium	Loose or Misaligned

Terminal Repair Threshold

Damage Mode: Bearing Plate

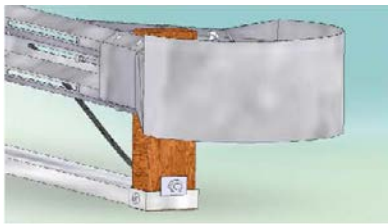

Relative Priority	Repair Threshold
High	Missing Bearing Plate

Note: Although not included in NCHRP 656, improper seating of the rail in an extruder head terminal (as shown in Figure 23 below) will not allow the terminal to function properly in a crash and could penetrate a vehicle during an impact. When identified, this should be corrected at the earliest reasonable opportunity.

Figure 23: Improper seating of rail into head

Cable Barrier Guidelines

Cable barrier systems are designed to contain and redirect an impacting vehicle while minimizing the forces on the vehicle and its occupants. Proper maintenance includes checking that the cables are properly tensioned and at the correct height.

- Routine tension check – this should be performed even in the absence of an impact, but it is particularly important during the first few years following the installation - at least once a year.
- Keep the cable intact – in the event of a crash resulting in a vehicle becoming entangled in the cable, the cable should be kept intact; cutting of the cable should only be done when there is a life or death situation. Alternatives to cutting the cable include:
    - Removing the vehicle by towing it in the opposite direction from which it hit the system.
    - Loosening the cables at the turnbuckles.
    - Cutting the turnbuckle which is preferred to cutting the cable. The adjacent posts on either side of the turnbuckle need to be removed. Personnel should be clear of the cable; the center of the turnbuckle should be cut as shown in Figure 24 below.

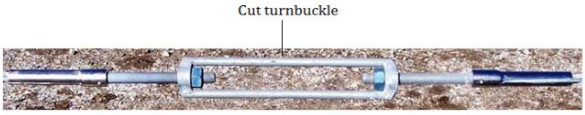

Figure 24: Turnbuckle cut location

Acronyms

AASHTO	American Association of State Highway and Transportation Officials
ADOT	Arizona Department of Transportation
ADT	Average Daily Traffic
EMS	Emergency Medical Services
FHWA	Federal Highway Administration
LON	Length of Need
MUTCD	Manual on Uniform Traffic Control Devices
MASH	Manual for Assessing Safety Hardware
NCHRP	National Cooperative Highway Research Program
RDG	Roadside Design Guide
ROR	Run off Road
TCP	Traffic Control Plan
TL	Test Level
TTC	Temporary Traffic Control
TTCZ	Temporary Traffic Control Zone
WZ	Work Zone

Resources

Arizona Department of Transportation (ADOT)

- ADOT Roadway Design Guidelines https://www.azdot.gov/business/engineering-and-construction/roadway-engineering/roadway-design/standards-and-guidelines/roadway-design-guidelines
- ADOT Construction Standard Drawings https://www.azdot.gov/business/engineering-and-construction/roadway-engineering/roadway-design/standards-and-guidelines/construction-standard-drawings
- Roadway Design Memos https://www.azdot.gov/business/engineering-and-construction/roadway-engineering/roadway-design/standards-and-guidelines/roadway-design-memos
- Barrier Design Information https://www.azdot.gov/business/engineering-and-construction/roadway-engineering/roadway-design/standards-and-guidelines/guardrail-barrier-and-transition-design-information
- ADOT Specifications https://www.azdot.gov/business/ContractsandSpecifications/Specifications
- Approved Products List https://www.azdot.gov/planning/research-center/product-evaluation-program/ADOTResearchCenter

Federal Highway Administration (FHWA) https://www.fhwa.dot.gov/

- FHWA Hardware Policy and Guidance http://safety.fhwa.dot.gov/roadway_dept/policy_guide/road_hardware/
- FHWA Longitudinal Barriers http://safety.fhwa.dot.gov/roadway_dept/policy_guide/road_hardware/barriers/
- FHWA Resource Charts http://safety.fhwa.dot.gov/roadway_dept/policy_guide/road_hardware/resource_charts/
- NHTSA FARS web site: http://www-fars.nhtsa.dot.gov/Main/index.aspx

American Association of State Highway and Transportation Officials (AASHTO) https://www.transportation.org/

- AASHTO, Roadside Design Guide, 2011
- Manual on Uniform Traffic Control Devices for Streets and Highways, 2009
- AASHTO, Manual for Assessing Safety Hardware, 2016 (MASH16)
- AASHTO, Manual for Assessing Safety Hardware, 2009 (MASH09)

AASHTO Task Force 13 website https://www.aashtotf13.org/

- Guide to Standardized Highway Barrier Hardware
- Guide to Standardized Bridge Rail Hardware
- W-Beam Guardrail Repair Guide
- Guide to Transitions

Roadside Safety Pooled Fund sites:

- MwRSF: http://mwrsf-qa.unl.edu/
- TTI: http://www.roadsidepooledfund.org/

National Cooperative Highway Research Program (NCHRP)
http://www.trb.org/

- Research Projects http://www.trb.org/NCHRP/Public/NCHRPProjects.aspx
- NCHRP 500 Volume 6: A Guide for Addressing Run-Off-Road Collisions

NOTES