STATE OF ARIZONA
DEPARTMENT OF TRANSPORTATION
INFRASTRUCTURE DELIVERY AND OPERATIONS DIVISION

ADOT

PROJECT PLANS

TOHONO O'ODHAM NATION HIGHWAYS
IRR 1, IRR 16, IRR 20, IRR 21, IRR 24, IRR 29, IRR 30, IRR 35, and IRR 42

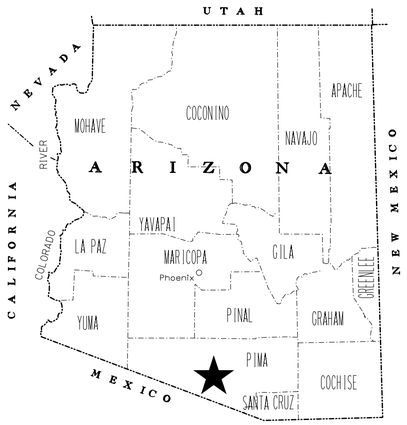

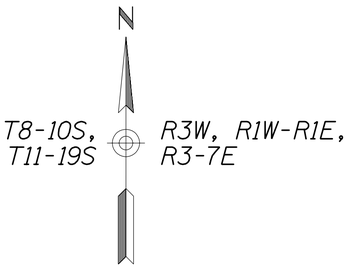

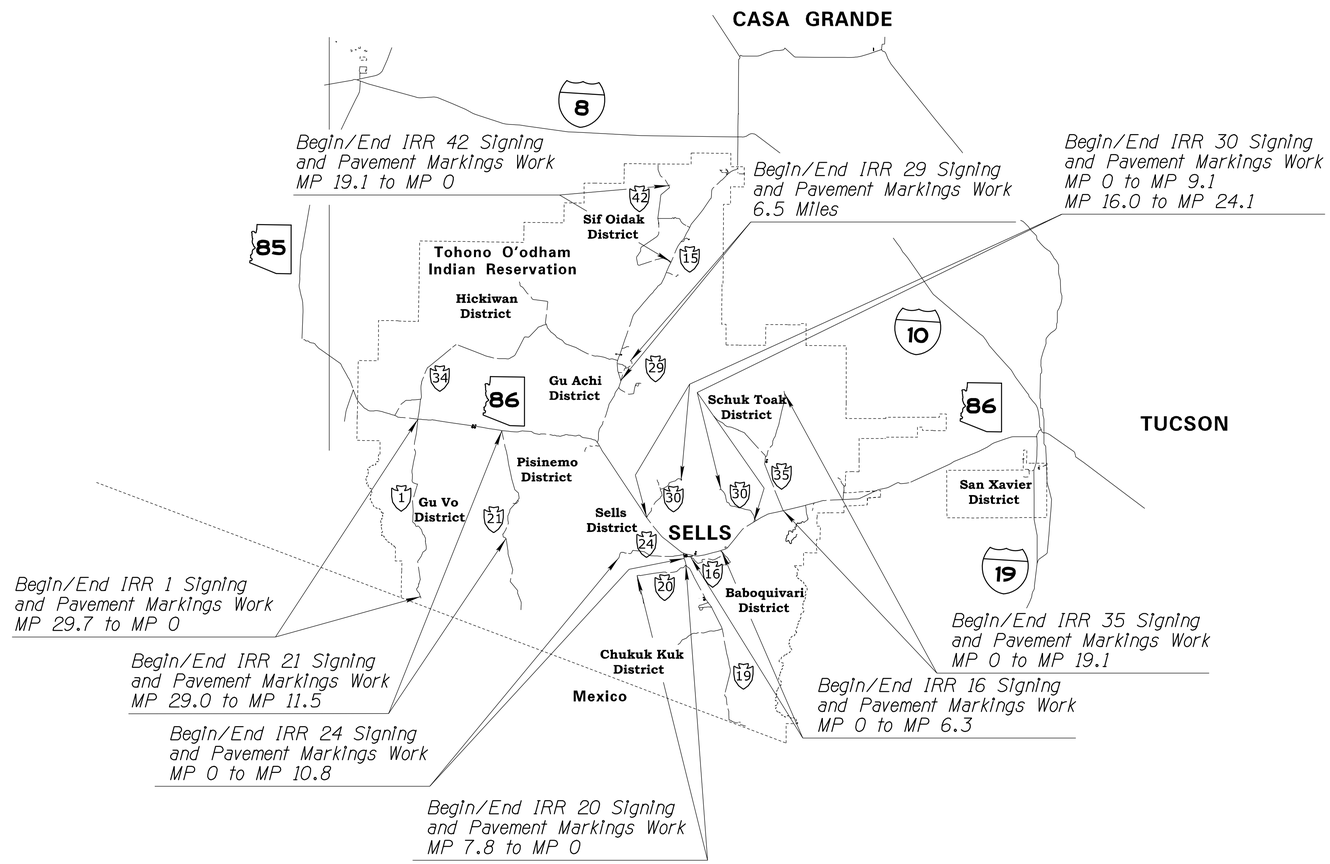

Constructed by:

Construction Company

Completion Date

Red-Lines by:

Construction Administrator Name & Company

Completion Date

Record Drawings by:

Record Drawings Designer Name & Company

Completion Date

TOHONO O'ODHAM NATION VARIOUS LOCATIONS

PROJECT NO. 0000 PM ITO SH643 01C
FEDERAL AID NO. ITO–0(208)T

ARIZONA DEPARTMENT OF TRANSPORTATION
INFRASTRUCTURE DELIVERY AND OPERATIONS DIVISION
DALLAS HAMMIT, P.E., STATE ENGINEER

REC. DWGS. DATA	REC. DWG. DATE	OF

DESIGN FILE: P:\60306196\900-Work\910-CAD\001_General\Sheets\Phase 3\06196facesheet.dgn

ADOT STANDARD DRAWINGS

TRAFFIC SIGNING & MARKING STANDARDS
(SHEET 1 OF 2)
EFFECTIVE MAY 2015

REVISION	STANDARD	SUBJECT: SIGNING & MARKING DETAILS
6/14	M-1	CURB MARKINGS FOR RAISED MEDIAN AND ISLANDS
6/14	M-2 SHT 1	INTERSECTION STRIPING
5/15	M-2 SHT 2	INTERSECTION STRIPING (TWO-LANE RURAL)
6/14	M-2 SHT 3	CENTERLINE & REVERSE CURVE DETAILS
6/14	M-3	STRIPING AND DELINEATION FOR FREEWAY TERMINALS
6/14	M-4	PASSING LANE STRIPING DETAILS
6/14	M-5	RAILROAD PAVEMENT MARKINGS
6/14	M-6	WORD MARKINGS
6/14	M-7	PAVEMENT LETTERS
6/14	M-8	PAVEMENT LETTERS
6/14	M-9	PAVEMENT NUMBERS
6/14	M-10 SHT 1	PAVEMENT MARKING SYMBOLS
6/14	M-10 SHT 2	PAVEMENT MARKING SYMBOLS
6/14	M-11	TURN LANE PAVEMENT MARKINGS
6/14	M-12	WRONG-WAY ARROWS
6/14	M-13	PREFERENTIAL LANE PAVEMENT MARKINGS
6/14	M-14	STRIPING AND DELINEATION FOR TRUCK ESCAPE RAMPS
6/14	M-15 SHT 1	PAVEMENT MARKING FOR FREEWAY ENTRANCE RAMP - TAPERED ACCELERATION LANE
6/14	M-15 SHT 2	PAVEMENT MARKING FOR FREEWAY ENTRANCE RAMP - PARALLEL ACCELERATION LANE
6/14	M-15 SHT 3	PAVEMENT MARKING FOR FREEWAY ENTRANCE RAMP - PARALLEL ACCELERATION LANE WITH HOV BYPASS
6/14	M-15 SHT 4	PAVEMENT MARKING FOR FREEWAY PARALLEL - ACCELERATION LANE
6/14	M-16 SHT 1	PAVEMENT MARKING FOR FREEWAY EXIT RAMPS - TAPERED DECELERATION LANE
6/14	M-16 SHT 2	PAVEMENT MARKING FOR FREEWAY EXIT RAMP - PARALLEL DECELERATION LANE
5/15	M-17	FREEWAY LANE DROP PAVEMENT MARKINGS
6/14	M-18	RECESSED PAVEMENT MARKER DETAILS
6/14	M-19 SHT 1	RAISED PAVEMENT MARKER PLAN LEGEND
6/14	M-19 SHT 2	NON-REFLECTIVE RAISED PAVEMENT MARKER DETAILS
6/14	M-19 SHT 3	RETROREFLECTIVE RAISED PAVEMENT MARKER DETAILS
6/14	M-19 SHT 4	RETROREFLECTIVE RAISED PAVEMENT MARKER DETAILS
5/15	M-19 SHT 5	PAVEMENT MARKING DETAILS FOR UNDIVIDED HIGHWAYS
6/14	M-19 SHT 6	RETROREFLECTIVE RAISED PAVEMENT MARKERS (RPM) FOR UNDIVIDED HIGHWAYS
6/14	M-19 SHT 7	FREEWAY AND DIVIDED HIGHWAY EDGE LINE AND LANE STRIPING
5/15	M-19 SHT 8	LANE DROP MARKING AND RAMP OR INTERSECTION GUIDE STRIPING
6/14	M-19 SHT 9	PAVEMENT MARKING CROSS-SECTION DETAILS FOR HIGHWAYS AND FREEWAYS
6/14	M-20 SHT 1	CHIP SEAL MARKER USAGE FOR TEMPORARY MARKERS
6/14	M-20 SHT 2	CHIP SEAL MARKER USAGE FOR TEMPORARY MARKERS
6/14	M-21	TRANSVERSE RUMBLE STRIP DETAILS
6/14	M-22 SHT 1	LONGITUDINAL RUMBLE STRIP GROOVE, PATTERN - AND LOCATION DETAILS
6/14	M-22 SHT 2	LONGITUDINAL RUMBLE STRIP EXCEPTION DETAILS
6/14	M-22 SHT 3	CENTERLINE RUMBLE STRIP GROOVE, PATTERN - AND LOCATION DETAILS
6/14	M-23	OBJECT MARKER DETAILS
6/14	M-24	OBJECT MARKER PLACEMENT DETAILS
6/14	M-26 SHT 1	DELINEATOR PLACEMENT AND SPACING
6/14	M-26 SHT 2	DELINEATOR PLACEMENT AND SPACING
6/14	M-26 SHT 3	FLEXIBLE DELINEATOR ASSEMBLIES
6/14	M-26 SHT 4	SQUARE STEEL POST DELINEATOR
6/14	M-26 SHT 5	DELINEATOR FOUNDATION DETAILS
6/14	M-27	DELINEATION DETAILS FOR MEDIAN CROSSOVERS
6/14	M-29	OFF-MAINLINE REFERENCE MARKER LOCATION DETAIL
6/14	M-30	OFF-MAINLINE REFERENCE MARKER DETAILS
6/14	M-32	BRIDGE AND BARRIER MARKER DETAILS
6/14	M-33	BRIDGE & BARRIER MARKER PLACEMENT AND INSTALLATION DETAILS
6/14	M-34	GUARDRAIL END TERMINAL DELINEATION DETAILS
6/14	M-35	OBJECT MARKER FOR SAND BARREL CRASH CUSHION

NO.	DESCRIPTION OF REVISION	MADE BY	DATE
NO.1	REVISED M-7 SHTS, M-11, M-19 SHTS, SNA, REVISED 5-7 SHTS ON PDG, UPDATED BORDER TITLE BLOCK	L. LOPEZ	5/15
NO.2	REVISED ALL DRAWINGS AND RE-ISSUED, CREATED SHEET 2.	L. LOPEZ	6/14

ADOT STANDARD DRAWINGS REVISION DATES and STANDARD NO.'s REVIEW		
	NAME	DATE
SIGNING & MARKING STANDARDS	Matthew D. Bond	6/15/16
PROJECT NO. 0000 PM ITO SH643 01C	1B-1	OF
RECORD DRAWING DATA	FEDERAL AID NO. ITO-0(208)T	REC. DWG. DATE / OF

6/14/2016 P:\60306196\900-Work\910-CAD\001_General\Sheets\Phase 3\061961B.dgn

ADOT STANDARD DRAWINGS

TRAFFIC SIGNING & MARKING STANDARDS
(SHEET 2 OF 2)
EFFECTIVE MAY 2015

REVISION	STANDARD	SUBJECT: SIGNING & MARKING DETAILS
6/14	S-1 SHT 1	GENERAL SIGNING NOTES
6/14	S-2 SHT 1	S & W BREAKAWAY POST SELECTION CHART
6/14	S-2 SHT 2	S & W BREAKAWAY POST INSTALLATION DETAILS
6/14	S-3 SHT 1	FLAT SHEET SIGNS SQUARE TUBE POST GENERAL NOTES
6/14	S-3 SHT 2	SINGLE POST FLAT SHEET RECTANGULAR SIGN ASSEMBLY - 12, 18 AND 24 INCH WIDTHS
6/14	S-3 SHT 3	SINGLE POST FLAT SHEET RECTANGULAR SIGN ASSEMBLY - 30, 36, 42 AND 54 INCH WIDTHS
6/14	S-3 SHT 4	TWO POST FLAT SHEET RECTANGULAR SIGN ASSEMBLY - 36, 42 AND 48 INCH WIDTHS
6/14	S-3 SHT 5	TWO POST FLAT SHEET RECTANGULAR SIGN ASSEMBLY - 54, 60 AND 72 INCH WIDTHS
6/14	S-3 SHT 6	TWO POST FLAT SHEET RECTANGULAR SIGN ASSEMBLY - 84 - 144 INCH WIDTHS
6/14	S-3 SHT 7	THREE POST FLAT SHEET RECTANGULAR SIGN ASSEMBLY - 48, 60 AND 72 INCH WIDTHS
6/14	S-3 SHT 8	THREE POST FLAT SHEET RECTANGULAR SIGN ASSEMBLY - 84 - 144 INCH WIDTHS
6/14	S-3 SHT 9	WARNING SIGN ASSEMBLY - SINGLE POST
6/14	S-3 SHT 10	WARNING SIGN ASSEMBLY - TWO POST
6/14	S-3 SHT 11	WARNING SIGN ASSEMBLY - THREE POST
6/14	S-3 SHT 12	MULTIPLE ROUTE MARKER ASSEMBLIES
6/14	S-3 SHT 13	SPECIAL SIGN ASSEMBLIES
6/14	S-3 SHT 14	STRINGER DETAILS FOR SQUARE TUBE POSTS
6/14	S-3 SHT 15	SQUARE TUBE SIGN POST FOUNDATION
6/14	S-3 SHT 16	SQUARE TUBE POST SLIP BASE DETAILS
6/14	S-4	W SHAPE BREAKAWAY POST FUSE PLATE AND HINGE DETAILS
6/14	S-5	W SHAPE BREAKAWAY POST DETAILS
6/14	S-6	S4x7.7 BREAKAWAY POST DETAILS
6/14	S-7 SHT 1	ALUMINUM EXTRUSION SIGN PANEL DETAILS
6/14	S-7 SHT 2	ALUMINUM EXTRUSION AUXILIARY SIGN INSTALLATION DETAILS
5/15	S-7 SHT 3	ALUMINUM EXTRUSION EXIT PANEL INSTALLATION DETAIL
6/14	S-8 SHT 1	FLAT SHEET ALUMINUM PANEL ON BREAKAWAY POSTS INSTALLATION DETAIL
6/14	S-8 SHT 2	ALUMINUM EXTRUSION SIGN TO PERFORATED POSTS INSTALLATION DETAIL
6/14	S-9 SHT 1	SIGN INSTALLATION ON POLE
6/14	S-9 SHT 2	SIGN INSTALLATION ON SIGNAL POLE
6/14	S-9 SHT 3	SIGN INSTALLATION ON POLE BAND-TYPE CLAMP
6/14	S-10	MILEPOST AND REFERENCE LOCATION SIGNS
6/14	S-11 SHT 1	TAPERED TUBE SIGN STRUCTURE CANTILEVER
6/14	S-11 SHT 2	TAPERED TUBE SIGN STRUCTURE CANTILEVER POST AND MAST ARM DETAILS
6/14	S-11 SHT 3	TAPERED TUBE SIGN STRUCTURE SINGLE BEAM
6/14	S-11 SHT 4	TAPERED TUBE SIGN STRUCTURE SINGLE BEAM POST AND BEAM DETAILS
6/14	S-12 SHT 1	TYPE A, B, AND DOWN ARROWS
6/14	S-12 SHT 2	TYPE C AND D ARROWS
6/14	S-12 SHT 3	C2 ARROW DETAIL
6/14	S-13	SIGN IDENTIFICATION DETAILS
6/14	S-14 SHT 1	ROTATING OPEN/CLOSED SIGN
6/14	S-14 SHT 2	ROTATING OPEN/CLOSED SIGN DETAILS
6/14	S-14 SHT 3	ROTATING OPEN/CLOSED SIGN MOUNTING DETAILS
6/14	S-15 SHT 1	FOLDING RECTANGULAR SIGN ASSEMBLY
6/14	S-15 SHT 2	FOLDING RECTANGULAR SIGN OPERATION
6/14	S-15 SHT 3	FOLDING DIAMOND SIGN ASSEMBLY
6/14	S-16 SHT 1	TEMPORARY WOOD POSTS
6/14	S-16 SHT 2	TEMPORARY WOOD POSTS SELECTION CHART
6/14	S-17	END OF ROAD BARRICADE
6/14	C-1	SAND BARREL CRASH CUSHION
6/14	C-2	SAND BARREL CRASH CUSHION TYPICAL INSTALLATION
6/14	C-3 SHT 1	PRECAST CONCRETE BARRIER STRUCTURAL DETAILS
6/14	C-3 SHT 2	PRECAST CONCRETE BARRIER PIN AND LOOP ASSEMBLY
6/14	C-4 SHT 1	MEDIAN CROSSOVER
6/14	C-4 SHT 2	TYPICAL END TREATMENTS FOR DETOURS USING TEMPORARY CONCRETE BARRIER (TCB)
6/14	C-5 SHT 1	APPROACH PLATE AND TRANSITION SECTION FOR TEMPORARY CONCRETE BARRIER
6/14	C-5 SHT 2	APPROACH PLATE AND TRANSITION SECTION FOR TEMPORARY CONCRETE BARRIER

NO.1	DESCRIPTION OF REVISION: REVISED ALL DRAWINGS AND RE-ISSUED, CREATED SHEET 2.	MADE BY: L. LOPEZ	DATE: 5/15
NO.2	DESCRIPTION OF REVISION: REVISED S-7 SHT3, M-T3, M-T4 SHT3 S&B ON PEL, UPDATED BORDER TITLE BLOCK.	MADE BY: L. LOPEZ	DATE: 6/14

ADOT STANDARD DRAWINGS
REVISION DATES and STANDARD NO.'s REVIEW

	NAME	DATE
SIGNING & MARKING STANDARDS	Matthew D. Bond	6/15/16

PROJECT NO. 0000 PM ITO SH643 01C — 1B-2 — OF

RECORD DRAWING DATA — FEDERAL AID NO. ITO-0(208)T — REC. DWG. DATE — OF

6/14/2016 P:\60306196\900-Work\910-CAD\001_General\Sheets\Phase 3\061961B2.dgn

F.H.W.A. REGION	STATE	PROJECT NO.	SHEET NO.	TOTAL SHEETS	RECORD DRAWINGS
9	ARIZ.	ITO-0(208)T	2	65	

0000 PM ITO

DESIGN DATA

Assumed 2013 AADT = 1,885
Assumed 2023 AADT = 2,080
** Design Speed = 55 MPH*

** Note that design speeds are based on posted speed limits. Design speeds decrease and vary in residential and horizontal curve locations.*

MIDPOINT OF PROJECT

(IRR 15/SR 86 Intersection)
Central Zone
State Plane Coordinates

X= 639,678
Y= 421,944

LENGTH OF PROJECT

IRR 1
Mile Post 0.0 to 29.7 = 29.7 Miles
IRR 16
Mile Post 0.0 to 6.3 = 6.3 Miles
IRR 20
Mile Post 0.0 to 7.8 = 7.8 Miles
IRR 21
Mile Post 11.5 to 29.0 = 17.5 Miles
IRR 24
Mile Post 0.0 to 10.8 = 10.8 Miles
IRR 29 (Segment 1)
Begin Mile 0.0 to 3.8 = 3.8 Miles
IRR 29 (Segment 2)
Begin Mile 2.1 to 4.1 = 2.0 Miles
IRR 29 (Segment 3)
Begin Mile 0.0 to 0.7 = 0.7 Miles
IRR 30 (Segment 1)
Mile Post 0.0 to 9.1 = 9.1 Miles
IRR 30 (Segment 2)
Mile Post 16.0 to 24.1 = 8.1 Miles
IRR 35
Mile Post 0.0 to 19.1 = 19.1 Miles
IRR 42
Mile Post 0.0 to 19.1 = 19.1 Miles
Gross & Net Length of Total Project = 134.0 Miles

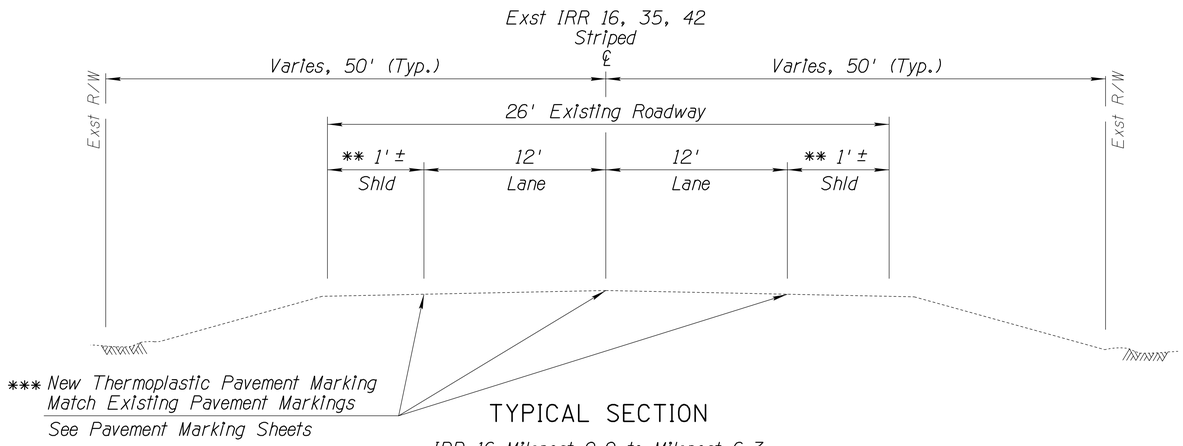

**** New Thermoplastic Pavement Marking Match Existing Pavement Markings See Pavement Marking Sheets*

TYPICAL SECTION

IRR 16 Milepost 0.0 to Milepost 6.3
IRR 35 Milepost 0.0 to Milepost 8.6
IRR 42 Milepost 0.0 to Milepost 19.1

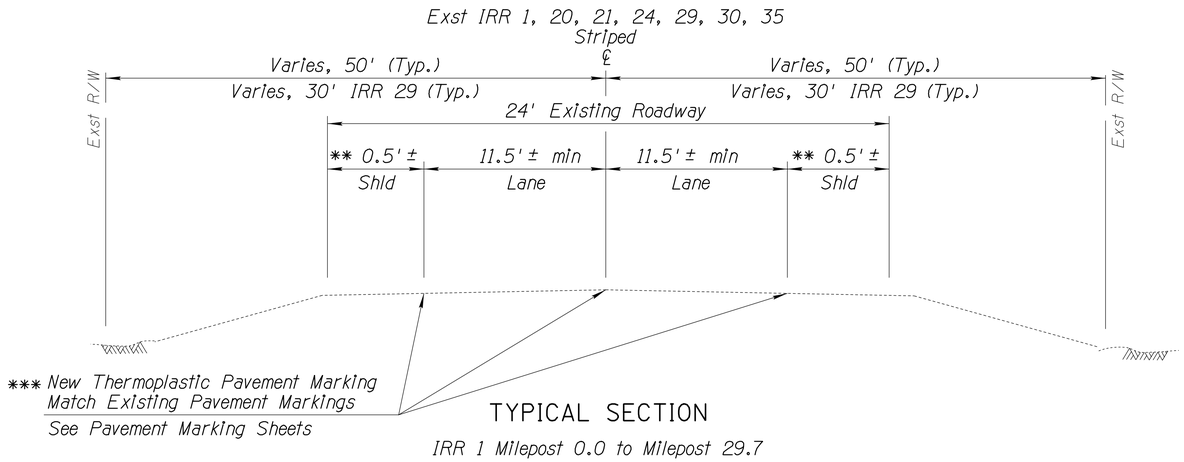

**** New Thermoplastic Pavement Marking Match Existing Pavement Markings See Pavement Marking Sheets*

TYPICAL SECTION

IRR 1 Milepost 0.0 to Milepost 29.7
IRR 20 Milepost 0.0 to Milepost 7.8
IRR 21 Milepost 11.5 to Milepost 29.0
IRR 24 Milepost 0.0 to Milepost 10.8
IRR 29 (Segment 1) Begin Mile 0.0 to End Mile 3.8
IRR 29 (Segment 2) Begin Mile 2.1 to End Mile 4.1
IRR 29 (Segment 3) Begin Mile 0.0 to End Mile 0.7
IRR 30 (Segment 1) Milepost 0.0 to Milepost 9.1
IRR 30 (Segment 2) Milepost 16.0 to Milepost 24.1
IRR 35 Milepost 8.6 to Milepost 19.1

*** IRR's with no existing edgeline pavement markings shall be striped with edgeline pavement markings offset 0.5' ± from the existing edge of pavement. See Pavement Marking Sheets.*

**** Pavement markings along horizontal curves in No Passing Zones shall be striped in compliance with the current approved MUTCD and ADOT Signing and Pavement Marking Standard Details.*

INDEX OF SHEETS

Sheet No.	Drawing No.	Sheet Title
		GENERAL
1		*Face Sheet*
1B		*1B Standard Sheets*
2	*G-2.01*	*Index and Design Data Sheet*
3-6	*G-4.01 G-4.04*	*Details*
		TRAFFIC
7-8	*T-1.01 - T-1.02*	*Traffic Contol Sheets*
9-13	*T-2.01 - T-2.05*	*Pavement Marking Sheets*
14-64	*T-3.01 - T-3.51*	*Sign Summary Sheets*
65	*T-4.01*	*Sign Format Sheet*

GENERAL NOTES

The project roadway shall be striped by the contractor in accordance with the current edition of the ADOT Signing and Marking Standard Drawings (M&S-Series) and the pavement marking plans.

Delineators shall be removed and reset as required at no additional cost to the department.

A field survey for existing utilities was not performed. There are numerous overhead lines and underground utilities throught the project. The contractor shall be responsible to adhere to all current Blue Stake laws and Section 107.15 of the Specifications.

The average project elevation is 2000'.

All work will be conducted within existing BIA Roadway Right of Way. New Right of Way and easements are not required.

Staging areas for pavement marking replacement, new signs, and sign replacement will be located in existing parking areas at the Sif Oidak (IRR 15 - MP 27.3), Gu Vo (IRR 1 - MP 18.9), Pisenemo (IRR 21 - MP 18.2), Schuk Toak (IRR 30 Segment 2 - MP 23.6) and Sells District Offices.

	NAME	DATE
DESIGN	MDB	06-16
DRAWN	MDB	06-16
CHECKED	KHC	06-16

TRANSPORTATION
AECOM TECHNICAL SERVICES, Inc.
7720 North 16th Street, Suite 100
Phoenix, Arizona 85020
T 602.371.1100
AECOM
www.aecom.com

ARIZONA DEPARTMENT OF TRANSPORTATION
INFRASTRUCTURE DELIVERY AND OPERATIONS DIVISION
ROADWAY DESIGN SERVICES

INDEX & DESIGN DATA SHEET

LOCATION
TOHONO O'ODHAM NATION VARIOUS LOCATIONS

Professional Engineer Certificate
49520
MATTHEW D. BONDY
Date Signed 6/30/2016
ARIZONA, U.S.A.
Expires 6/30/2018

DWG NO. G-2.01

TRACS NO. SH643 01C | ITO-0(208)T | ____ OF ____

6/14/2016 P:\60306196\900-Work\910-CAD\001_General\Sheets\Phase 3\06196ds01.dgn

SURVEY NO. | FINISHED PLANS | REVISIONS | LOCATION | DATE

F.H.W.A. REGION	STATE	PROJECT NO.	SHEET NO.	TOTAL SHEETS	RECORD DRAWINGS
9	ARIZ.	ITO-0(208)T	3	65	
		0000 PM ITO			

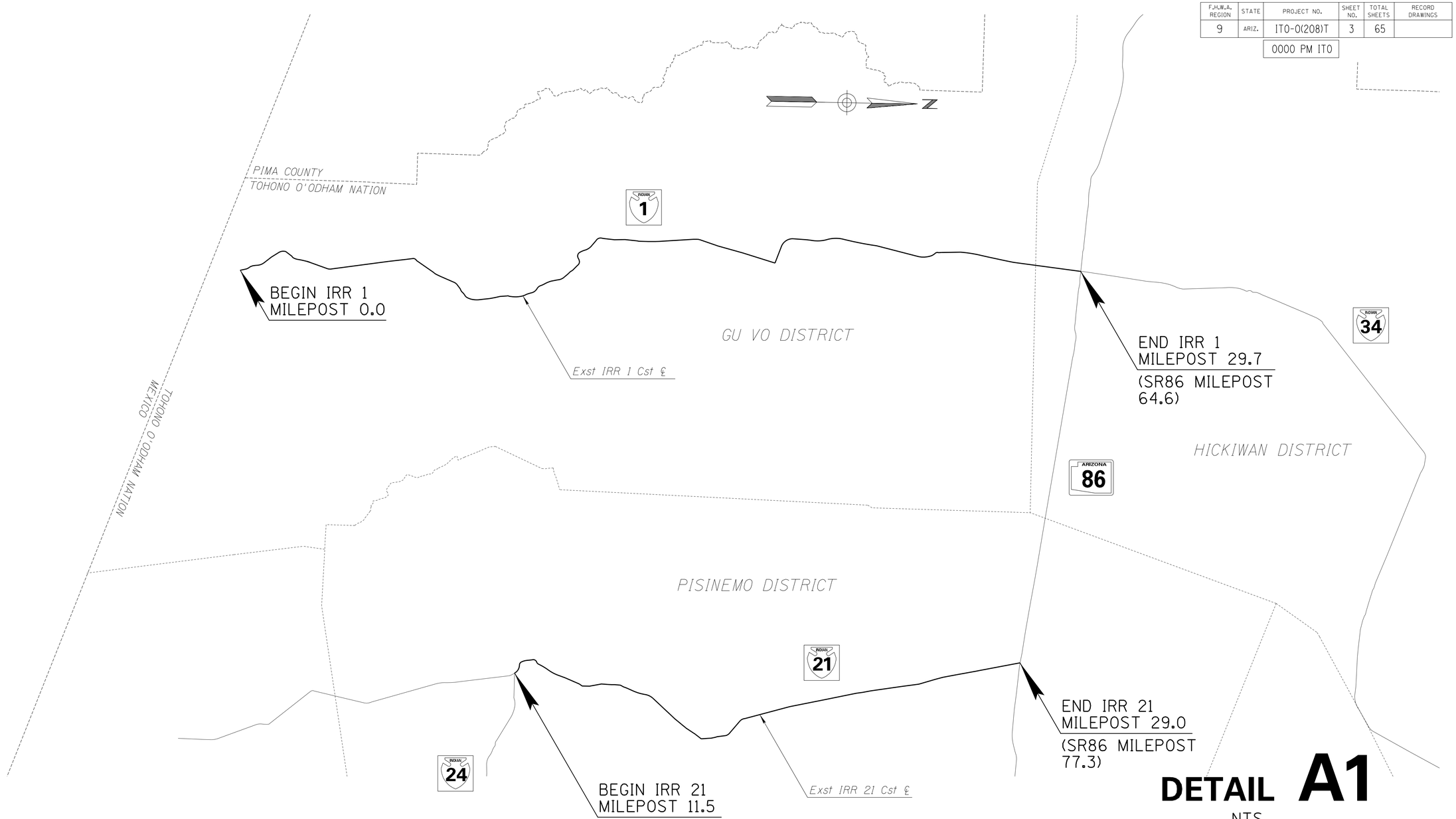

DETAIL A1

NTS

IRR 1 & 21 VICINITY MAP

NOTES:

1. *Sign Locations and Pavement Marking Limits Based on Existing Mile Post Marker Locations (See Signing and Pavement Marking Sheets for Proposed Locations and Limits)*
2. *The contractor Shall Identify the Location of Existing Mile Post Markers Prior to Construction.*
3. *Missing Mile Post Markers to be Installed Prior to Signing and Pavement Marking Construction Activities In Order to Provide Sign Location and Pavement Marking Limit Reference Points.*

	NAME	DATE
DESIGN	MDB	06-16
DRAWN	MDB	06-16
CHECKED	KHC	06-16

TRANSPORTATION

AECOM TECHNICAL SERVICES, Inc.
7720 North 16th Street, Suite 100
Phoenix, Arizona 85020
T 602.371.1100
AECOM
www.aecom.com

ARIZONA DEPARTMENT OF TRANSPORTATION
INFRASTRUCTURE DELIVERY AND OPERATIONS DIVISION
ROADWAY DESIGN SERVICES

DETAIL A1
IRR 1 & 21 VICINITY MAP

LOCATION
TOHONO O'ODHAM NATION VARIOUS LOCATIONS

Registered Professional Engineer
CERTIFICATE
49520
MATTHEW D. BONDY
Date Signed 6/14/2016
ARIZONA, U.S.A.
Expires 6/30/2018

DWG NO. G-4.01

TRACS NO. SH643 01C | ITO-0(208)T | ___ OF ___

6/14/2016 P:\60306196\900-Work\910-CAD\001_General\Sheets\Phase 3\sh06196dtal.dgn

SURVEY NO. | FINISHED PLANS | REVISIONS | LOCATION | DATE

F.H.W.A. REGION	STATE	PROJECT NO.	SHEET NO.	TOTAL SHEETS	RECORD DRAWINGS
9	ARIZ.	ITO-0(208)T	4	65	

0000 PM ITO

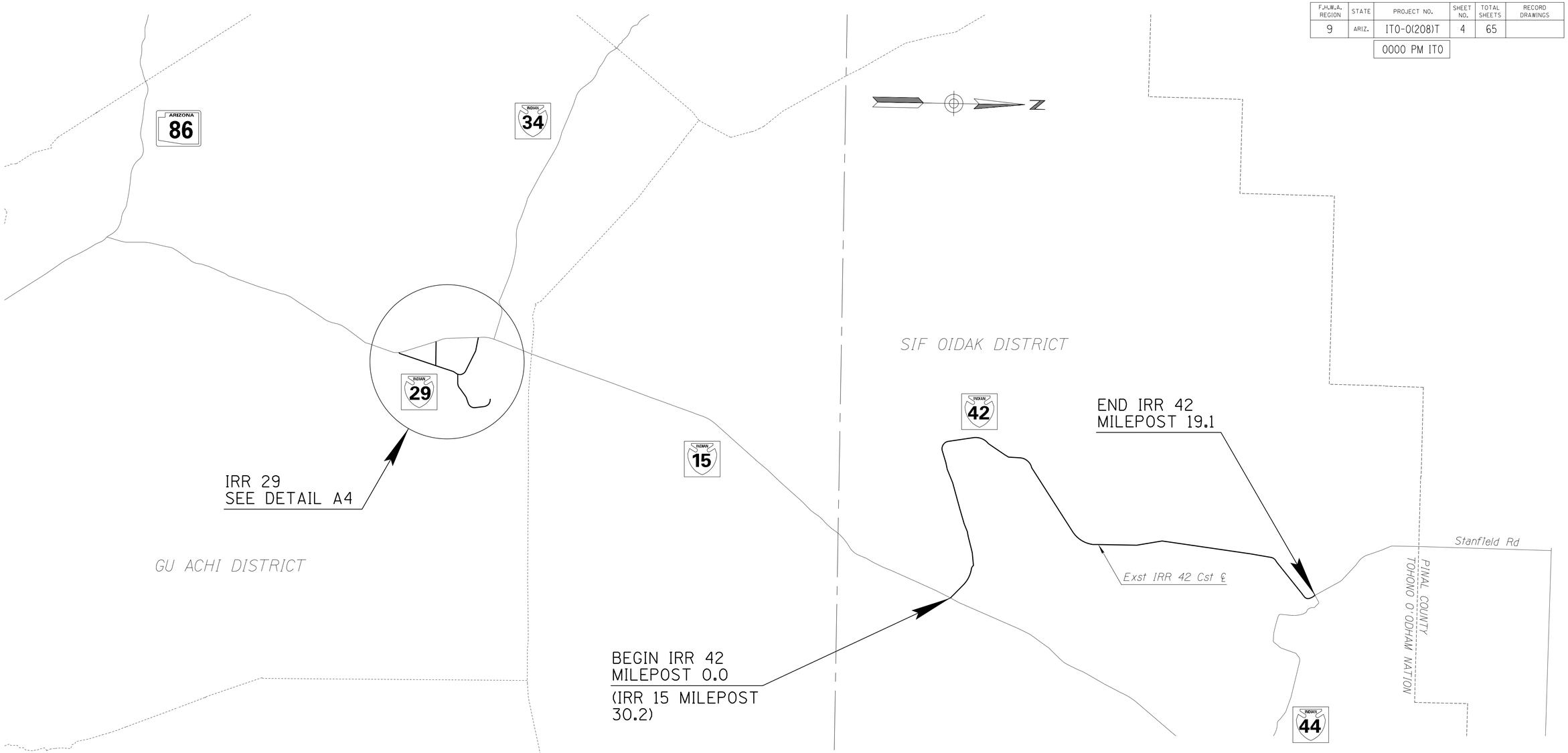

DETAIL A2

NTS

IRR 29 & 42 VICINITY MAP

NOTES:

1. *Sign Locations and Pavement Marking Limits Based on Existing Mile Post Marker Locations (See Signing and Pavement Marking Sheets for Proposed Locations and Limits)*
2. *The contractor Shall Identify the Location of Existing Mile Post Markers Prior to Construction.*
3. *Missing Mile Post Markers to be Installed Prior to Signing and Pavement Marking Construction Activities In Order to Provide Sign Location and Pavement Marking Limit Reference Points.*

	NAME	DATE
DESIGN	MDB	06-16
DRAWN	MDB	06-16
CHECKED	KHC	06-16

TRANSPORTATION

AECOM TECHNICAL SERVICES, Inc.
7720 North 16th Street, Suite 100
Phoenix, Arizona 85020
T 602.371.1100

AECOM
www.aecom.com

ARIZONA DEPARTMENT OF TRANSPORTATION
INFRASTRUCTURE DELIVERY AND OPERATIONS DIVISION
ROADWAY DESIGN SERVICES

DETAIL A2
IRR 29 & 42 VICINITY MAP

LOCATION
TOHONO O'ODHAM NATION VARIOUS LOCATIONS

Registered Professional Engineer
CERTIFICATE NO.
49520
MATTHEW D. BONDY
Date Signed 6/30/2016
ARIZONA, U.S.A.
Expires 6/30/2018

DWG NO. G-4.02

TRACS NO. SH643 01C | ITO-0(208)T | ____ OF ____

SURVEY NO. | FINISHED PLANS | REVISIONS | LOCATION | DATE

6/14/2016 P:\60306196\900-Work\910-CAD\001_General\Sheets\Phase 3\sh06196dta2.dgn

F.H.W.A. REGION	STATE	PROJECT NO.	SHEET NO.	TOTAL SHEETS	RECORD DRAWINGS
9	ARIZ.	ITO-0(208)T	5	65	
		0000 PM ITO			

SURVEY NO. | FINISHED PLANS | REVISIONS | LOCATION | DATE

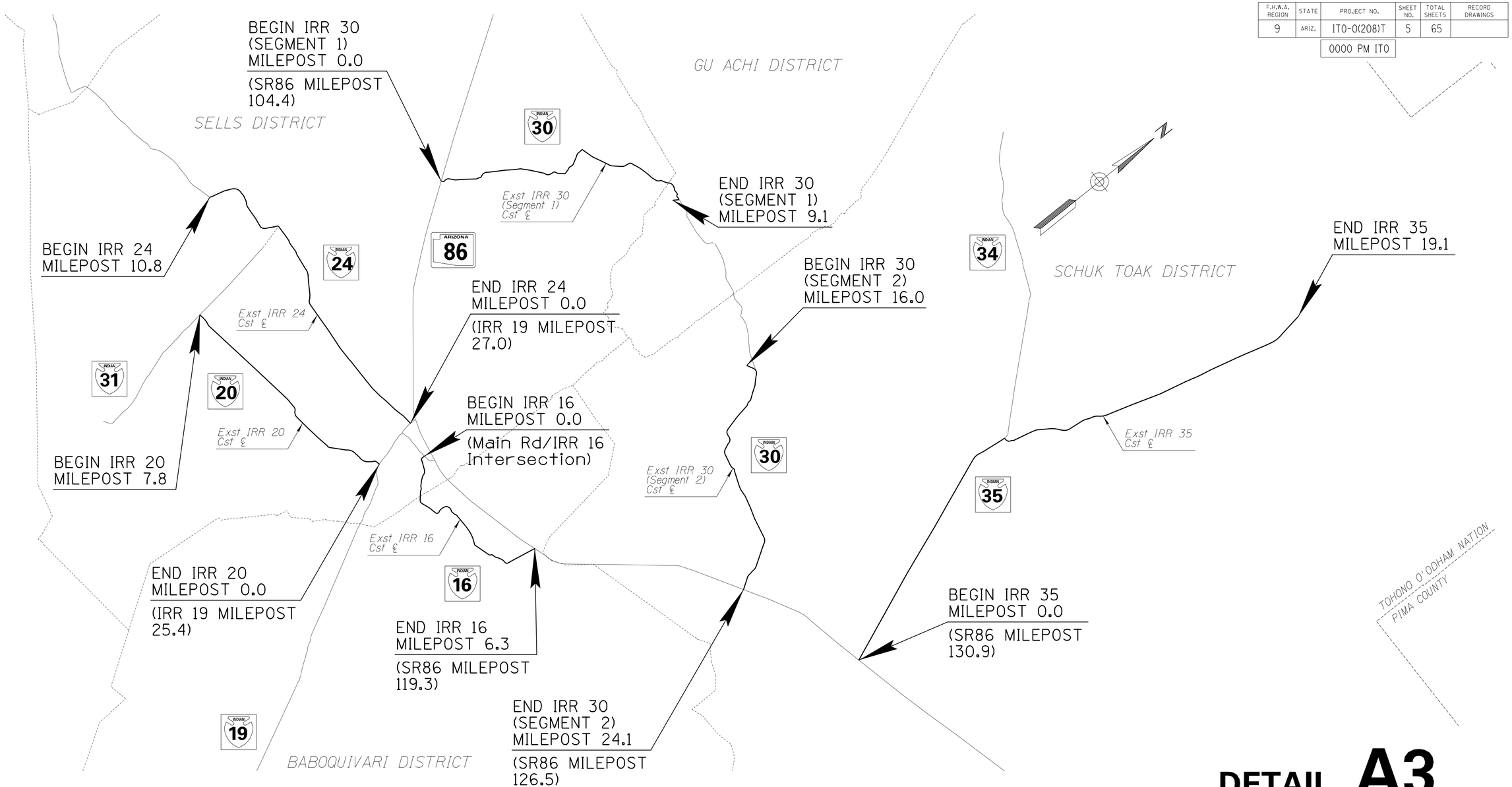

DETAIL A3

NTS

IRR 16, 20, 24, 30, & 35 VICINITY MAP

NOTES:

1. *Sign Locations and Pavement Marking Limits Based on Existing Mile Post Marker Locations (See Signing and Pavement Marking Sheets for Proposed Locations and Limits)*
2. *The contractor Shall Identify the Location of Existing Mile Post Markers Prior to Construction.*
3. *Missing Mile Post Markers to be Installed Prior to Signing and Pavement Marking Construction Activities In Order to Provide Sign Location and Pavement Marking Limit Reference Points.*

	NAME	DATE
DESIGN	MDB	06-16
DRAWN	MDB	06-16
CHECKED	KHC	06-16

TRANSPORTATION

AECOM TECHNICAL SERVICES, Inc.
7720 North 16th Street, Suite 100
Phoenix, Arizona 85020
T 602.371.1100
AECOM
www.aecom.com

ARIZONA DEPARTMENT OF TRANSPORTATION
INFRASTRUCTURE DELIVERY AND OPERATIONS DIVISION
ROADWAY DESIGN SERVICES

DETAIL A3
IRR 16, 20, 24, 30,
& 35 VICINITY MAP

Registered Professional Engineer
CERTIFICATE
49520
MATTHEW D.
BONDY
Date Signed 6/14/2016
ARIZONA, U.S.A.
Expires 6/30/2018

LOCATION
TOHONO O'ODHAM NATION VARIOUS LOCATIONS

DWG NO. G-4.03

TRACS NO. SH643 01C | ITO-0(208)T | ___ OF ___

6/14/2016 P:\60306196\900-Work\910-CAD\001_General\Sheets\Phase 3\sh06196dta3.dgn

F.H.W.A. REGION	STATE	PROJECT NO.	SHEET NO.	TOTAL SHEETS	RECORD DRAWINGS
9	ARIZ.	ITO-0(208)T	6	65	

0000 PM ITO

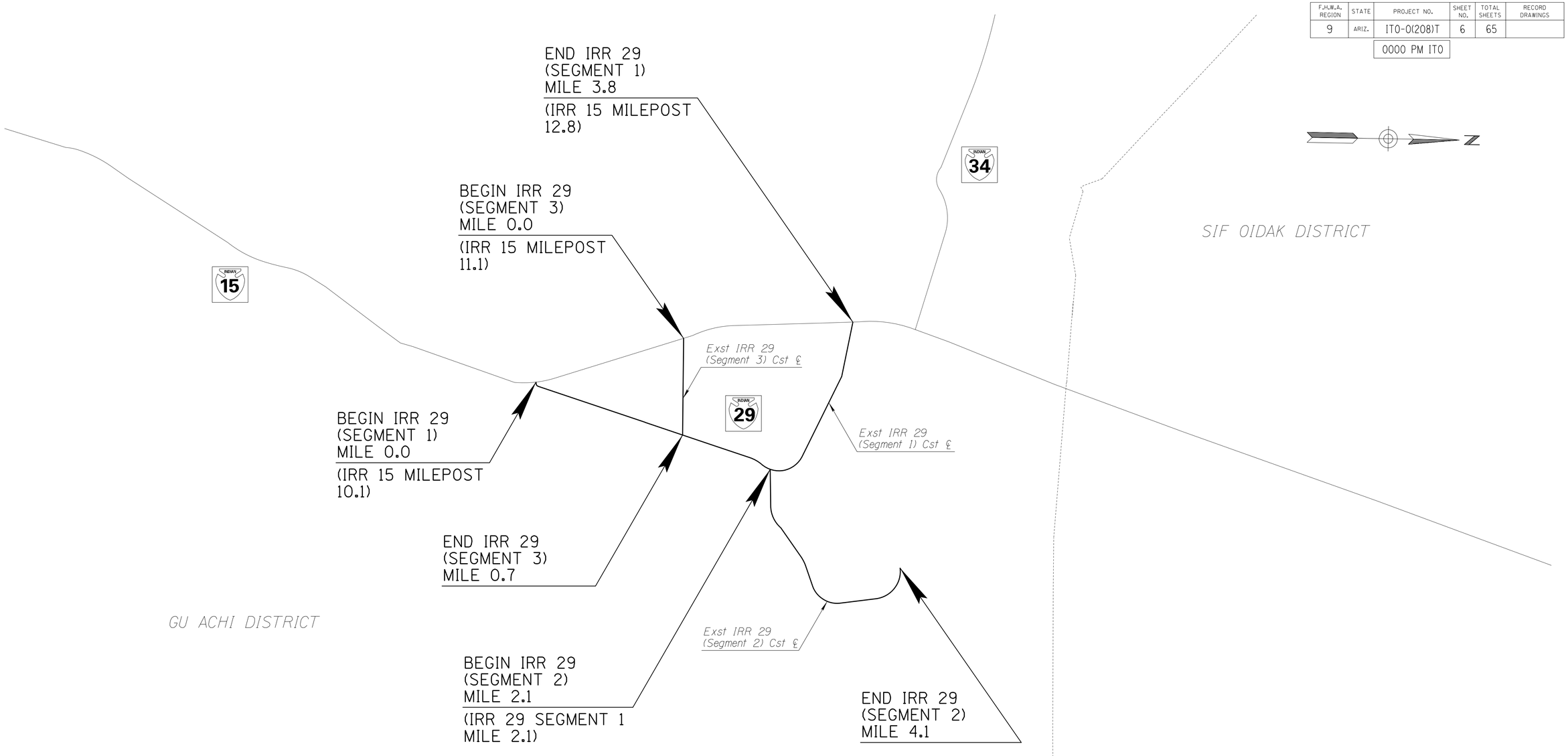

DETAIL A4

NTS

IRR 29 VICINITY MAP

NOTES:

1. *No Milepost Markers Located on IRR 29. Mile Limits Provided as Reference Locations for Signing and Marking. (See Signing and Pavement Marking Sheets for Proposed Locations and Limits)*

	NAME	DATE
DESIGN	MDB	06-16
DRAWN	MDB	06-16
CHECKED	KHC	06-16

TRANSPORTATION

AECOM TECHNICAL SERVICES, Inc.
7720 North 16th Street, Suite 100
Phoenix, Arizona 85020
T 602.371.1100

AECOM
www.aecom.com

ARIZONA DEPARTMENT OF TRANSPORTATION
INFRASTRUCTURE DELIVERY AND OPERATIONS DIVISION
ROADWAY DESIGN SERVICES

DETAIL A4
IRR 29 VICINITY MAP

LOCATION
TOHONO O'ODHAM NATION VARIOUS LOCATIONS

Matthew D. Bondy
CERTIFICATE NO. 49520
MATTHEW D. BONDY
Date Signed 6/15/2016
ARIZONA, U.S.A.
Expires 6/30/2018

DWG NO. G-4.04

TRACS NO. SH643 01C | ITO-0(208)T | ___ OF ___

6/14/2016 P:\60306196\900-Work\910-CAD\001_General\Sheets\Phase 3\sh06196dta4.dgn

SURVEY NO. | FINISHED PLANS | REVISIONS | LOCATION | DATE

F.H.W.A. REGION	STATE	PROJECT NO.	SHEET NO.	TOTAL SHEETS	RECORD DRAWINGS
9	ARIZ.	ITO-0(208)T	7	65	

0000 PM ITO

SURVEY NO. | FINISHED PLANS | REVISIONS | LOCATION | DATE

TRAFFIC CONTROL NOTES:

1. The traffic control plans represent a suggested method for traffic control during construction. The contractor may prepare another traffic control plan in accordance with Section 701 of the Specifications. All traffic control plans are subject to the approval of the Engineer & by the Tohono O'Odham Nation Planning Department before beginning construction. The contractor is responsible for any permit/review fees.

2. Adjustments to the details of these traffic control plans and requirements may be necessary due to construction activities, as directed by the Engineer.

3. All existing signs in conflict with the construction signs shall be removed, relocated or covered in place, as directed by the Engineer. The contractor shall store and reinstall new items which have been removed or relocated in a manner approved by the Engineer at no cost to the Department except for manufacturing costs.

4. All construction warning signs shall have black letters on a fluorescent orange background, except as otherwise noted.

5. Signs shall be mounted on embedded posts, spring stands or rigid stands unless otherwise directed by the Engineer. For signs installed on embedded posts, sign mounting height is a minimum of 7 (seven) feet as measured from the bottom of the sign to the near edge of the pavement. Signs on rigid or spring stands shall be minimum of 1 (one) foot above pavement.

6. The nearest edge or corner of a sign shall be approximately 12 feet from the nearest edge of pavement or 3 (three) feet behind guardrail for all signs mounted on embedded posts.

7. Flags shall be mounted on top of all construction signs except the "End Road Work, Thank You" sign. Type 'A' flashing warning lights shall be required on all night-time construction signs except the "End Road Work, Thank You" sign.

8. Channelizing devices shall be placed 20 feet on center on tapers and 40 feet on center on tangents, except as otherwise noted on the plans.

9. Speed limit signing is preliminary and is subject to review and change by the Engineer as dictated by field conditions.

10. Construction signs shall not be displayed to traffic more than 24 hours prior to the actual start of construction. These signs may be installed sooner, but they must be covered or turned away from traffic. The cost for covering or turning them shall be considered part of the sign installation cost. No further compensation will be made. These signs shall be removed within 24 hours after the completion of construction activities.

11. All drawings are schematic only and not to scale.

12. All dimensions are in feet unless otherwise noted on the plans or detailed drawings.

13. Reference Identification:
MUTCD-- Part VI of the Manual on Uniform Traffic Control Devices for Street & Highway 2009 edition, and Arizona Department of Transportation Traffic Control Design Guidelines, 2010.

14. Work Hour Matrix - One Direction Closure

    Daily Closure Period (Limited Duration)
    Monday - Thursday 5 AM to 7 PM
    Friday 5 AM to 12 PM

    The maximum stopped vehicle delay shall be no more than 15 to 20 minutes.

15. When traffic control items are not in use, the contractor shall remove these items to a location at least 30 feet from the edge of the roadway.

16. Signing for double fines in work zones, when allowed by the Engineer, shall generally conform to Figure SA-12 of the Arizona Department of Transportation Traffic Control Design Guidelines, 2010. Such signing shall only be in place during working periods when workers are present in accordance with guidelines for double fines in work zones. All signs shall be in compliance with current sign codes per the Arizona Manual of Approved Signs (MOAS).

17. The retro-reflective sheeting on all construction signs shall meet criteria established in Section 1007 of the Specifications.

	NAME	DATE
DESIGN	AE	06-16
DRAWN	AE	06-16
CHECKED	KEB	06-16

TRANSPORTATION
AECOM TECHNICAL SERVICES, Inc.
7720 North 16th Street, Suite 100
Phoenix, Arizona 85020
T 602.371.1100
AECOM
www.aecom.com

ARIZONA DEPARTMENT OF TRANSPORTATION
INFRASTRUCTURE DELIVERY AND OPERATIONS DIVISION
TRAFFIC DESIGN SERVICES

TRAFFIC CONTROL
GENERAL NOTES

LOCATION
TOHONO O'ODHAM NATION VARIOUS LOCATIONS

Registered Professional Engineer
Kate E. Bondy
45815
KATE E. BONDY
Date Signed 6/15/2016
ARIZONA, U.S.A.
Expires 3/31/2019

DWG NO. T-1.01

TRACS NO. SH643 01C | ITO-0(208)T | ___ OF ___

6/14/2016 P:\60306196\900-Work\910-CAD\001_General\Sheets\Phase 3\t06196tn01(Phase 1,2,&3).dgn

F.H.W.A. REGION	STATE	PROJECT NO.	SHEET NO.	TOTAL SHEETS	RECORD DRAWINGS
9	ARIZ.	ITO-0(208)T	8	65	

0000 PM ITO

SURVEY NO. | FINISHED PLANS | REVISIONS | LOCATION | DATE

APPROXIMATE TRAFFIC CONTROL QUANTITIES

ITEM NO.	BID ITEM DESCRIPTION	UNITS	ACTIVITY #1	ACTIVITY #2	TOTAL
	Estimated Construction Duration (Working Day)	DAYS	67	44	
7016033	Portable Sign Stands (Spring Type)	EACH-DAY	67	88	155
7016035	Warning Lights (Type A)	EACH-DAY	67		67
7016050	Truck Mounted Attenuator	EACH-DAY	67	44	111
7016051	Temporary Sign (Less Than 10 S.F.)	EACH-DAY	134	220	354

MAINTENANCE OF TRAFFIC

ACTIVITY #	CONSTRUCTION ACTIVITY	TRAFFIC CONTROL	COMMENTS
1	• Remove, replace, & install new signs, sign posts, and foundations along IRR 1, 16, 20, 21, 24, 29, 30, 35, and 42.	• Mobile operation on shoulder, TA-4 of MUTCD.	• Maintain access to driveways during traffic control.
2	• Install permanent thermoplastic pavement markings along IRR 1, 16, 20, 21, 24, 29, 30, 35, and 42.	• Provide mobile operation with one attenuator mounted shadow vehicle, SA-19 of ADOT Traffic Control Design Guidelines.	• Maintain access to driveways during traffic control.

NOTE:

1. The order of construction activities does not constitute a sequence of construction. The contractor shall perform the work in the most expeditious manner consistent with the plans and special provisions with the approval of the Engineer. Any modification to these plans shall require review and approval by the Engineer.

2. All signs shall be in compliance with current sign codes per the Arizona Manual of Approved Signs (MOAS).

	NAME	DATE
DESIGN	AE	06-16
DRAWN	AE	06-16
CHECKED	KEB	06-16

TRANSPORTATION

AECOM TECHNICAL SERVICES, Inc.
7720 North 16th Street, Suite 100
Phoenix, Arizona 85020
T 602.371.1100
AECOM
www.aecom.com

ARIZONA DEPARTMENT OF TRANSPORTATION
INFRASTRUCTURE DELIVERY AND OPERATIONS DIVISION
TRAFFIC DESIGN SERVICES

TRAFFIC CONTROL QUANTITIES & MAINTENANCE OF TRAFFIC

Registered Professional Engineer
45815
KATE E. BONDY
State Registered
ARIZONA, U.S.A.
Expires 3/31/2018

LOCATION
TOHONO O'ODHAM NATION VARIOUS LOCATIONS

DWG NO. T-1.02

TRACS NO. SH643 01C | ITO-0(208)T | ____ OF ____

6/14/2016 P:\60306196\900-Work\910-CAD\001_General\Sheets\Phase 3\t06196t01(Phase 3).dgn

F.H.W.A. REGION	STATE	PROJECT NO.	SHEET NO.	TOTAL SHEETS	RECORD DRAWINGS
9	ARIZ.	ITO-0(208)T	9	65	
		0000 PM ITO			

PAVEMENT MARKING GENERAL NOTES

1. All pavement markings shall be in compliance with the current approved Manual on Uniform Traffic Control Devices (MUTCD) and the ADOT Signing and Pavement Marking Standard Details.
2. Final striping shall be installed over existing striping.
3. The dimensions shown to pavement striping are to the center of the pavement marking, or in the case of double pavement marking, to the center of the double pavement marking.
4. The contractor shall clean the roadway surface, to the satisfaction of the Engineer, by sweeping and air-jet blowing, immediately prior to the placement of all pavement markings. The roadway surface shall be dry and the air and pavement temperatures shall be a minimum of 55°F and rising for the placement of thermoplastic striping.
5. The pavement marking drawings are schematic only and not to scale. The contractor shall follow all dimensions, details and ADOT standards when installing pavement striping, markings, and markers.
6. The permanent pavement marking plans may be modified as directed by the Engineer.
7. The contractor shall notify the Engineer two weeks prior to the application of any pavement markings to schedule a "NO PASSING ZONE" survey by state forces. The results of the "NO PASSING ZONE" survey shall supersede the pavement marking plans. The contractor shall not apply the pavement markings until the Engineer approves the layout for the permanent pavement markings, including any adjustments based on the "NO PASSING ZONE" survey. The "NO PASSING ZONE" crew can be reached at (602) 228-0889, (602) 228-2508, or (602) 228-4932.
8. All dimensions are in feet unless otherwise noted.
9. The contractor shall remove all existing raised pavement markers. This cost will be included in the cost of the proposed pavement markings.
10. All reflective raised pavement markers shall be installed so that the reflective face of each marker is facing the direction of traffic and is perpendicular to the direction of traffic flow.
11. All reflective raised pavement markers shall have an abrasion-resistant coating on the face of the prismatic reflectors and shall conform to details M-18 or M-19 of the ADOT Standard Drawings. They shall be installed with a bituminous adhesive which is on the ADOT Approved Products List.
12. All final stop bars, crosswalk lines, and pavement arrows shall be 90 mil (0.090 inch) thick, extruded thermoplastic reflectorized markings.
13. The contractor shall break the center lines and edge lines adjacent to turnouts across any intersections with dedicated roadways or as otherwise directed by the Engineer. In addition, the contractor shall not place any center lines within 10 feet of the nearest edge of pavement of the intersecting roadway.

APPROXIMATE PAVEMENT MARKING QUANTITIES

ITEM NO.	ITEM	UNIT	TOTAL QUANTITIES
7040070	Pavement Marking (White Thermoplastic) (0.090)	L.FT.	2,115,100*
7040071	Pavement Marking (Yellow Thermoplastic) (0.090)	L.FT.	953,500*
7040072	Pavement Marking (Transverse) (Thermoplastic) (0.090)	L.FT.	900*
7060015	Pavement Marker, Raised, Type D	EACH	18,300

* - Total Quantities Based on a 4" Wide Equivalent Stripe

SIGNING GENERAL NOTES

1. All signs shall be in compliance with the current approved Manual on Uniform Traffic Control Devices (MUTCD Signing and Marking Standard Drawings), and the ADOT Traffic Engineering Manual of Approved Signs.
2. The sign locations and the post lengths are approximate. The contractor shall verify the sign locations and actual post lengths with the Engineer prior to installing signs.
3. The bottom of each sign shall be at least seven feet above the nearest edge of pavement and at least seven feet above the ground under the sign, unless otherwise noted in the plans.
4. Offsets for all signs shall be measured from the edge of the roadway to the nearest edge of the sign.
5. The retroreflective sheeting on all new signs shall meet the requirements of Section 608 of the Specifications.
6. The retroreflective sheeting on all new signs shall meet criteria established in Section 1007 of the Specifications.
7. All new signs shall be installed on new square tube posts with foundations as indicated in ADOT Traffic Standard Drawing S-3.
8. The Engineer may modify the signing plans.
9. The contractor shall remove existing signing where indicated in the sign summary.
10. Object marker locations are approximate. The contractor shall locate pipes and headwalls for exact locations. See ADOT Traffic Standard Drawing M-23 for additional details.

APPROXIMATE SIGNING QUANTITIES

ITEM NO.	ITEM	UNIT	PAY QUANTITIES
2020053	Remove (Sign)	EACH	705
6070038	Slip Base (2 1/2)	EACH	352
6070054	Sign Post (Preforated) (2S)	L.FT.	551
6070055	Sign Post (Preforated) (2½S)	L.FT.	7757
6070060	Foundation for Sign Post (Concrete)	EACH	685
6080005	Warning, Marker, or Regulartory Sign Panel	SQ.FT.	3214
6080025	Flat Sheet Aluminum Sign Panel	SQ.FT.	53
7030080	Object Marker (M-23) (Type 3(1))	EACH	396
7030095	Milepost Marker (S-10)	EACH	236

	NAME	DATE
DESIGN	AE	06-16
DRAWN	AE	06-16
CHECKED	KEB	06-16

TRANSPORTATION

AECOM TECHNICAL SERVICES, Inc.
7720 North 16th Street, Suite 100
Phoenix, Arizona 85020
T 602.371.1100
AECOM
www.aecom.com

ARIZONA DEPARTMENT OF TRANSPORTATION
INFRASTRUCTURE DELIVERY AND OPERATIONS DIVISION
TRAFFIC DESIGN SERVICES

PAVEMENT MARKING AND SIGNING GENERAL NOTES & QUANTITIES

LOCATION
TOHONO O'ODHAM NATION VARIOUS LOCATIONS

Registered Professional Engineer
45815
KATE E. BONDY
Date Signed 6/16/2016
ARIZONA, U.S.A.
Expires 3/31/2018

DWG NO. T-2.01

TRACS NO. SH643 01C | ITO-0(208)T | ____ OF ____

6/14/2016 P:\60306196\900-Work\910-CAD\001_General\Sheets\Phase 3\t06196pn01(Phase 2 & 3).dgn

SURVEY NO. | FINISHED PLANS | REVISIONS | LOCATION | DATE

F.H.W.A. REGION	STATE	PROJECT NO.	SHEET NO.	TOTAL SHEETS	RECORD DRAWINGS
9	ARIZ.	ITO-0(208)T	10	65	
		0000 PM ITO			

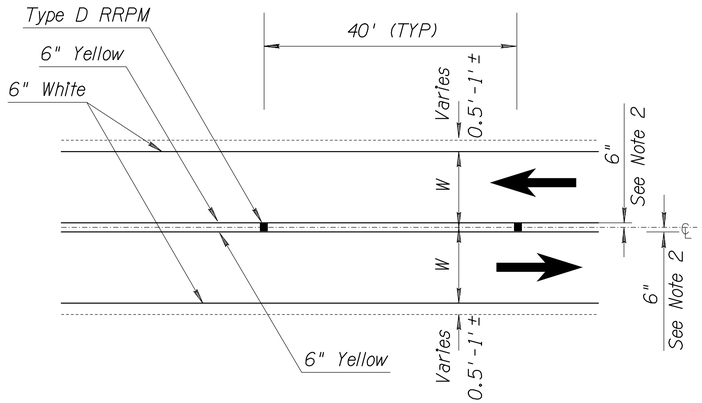

DETAIL A

No Passing Zone
Direction of Increasing Mile Posts

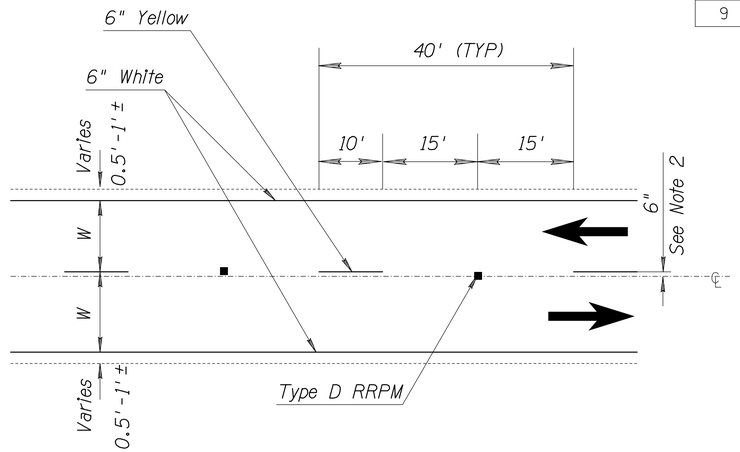

DETAIL B

Two-Way Passing Zone
Direction of Increasing Mile Posts

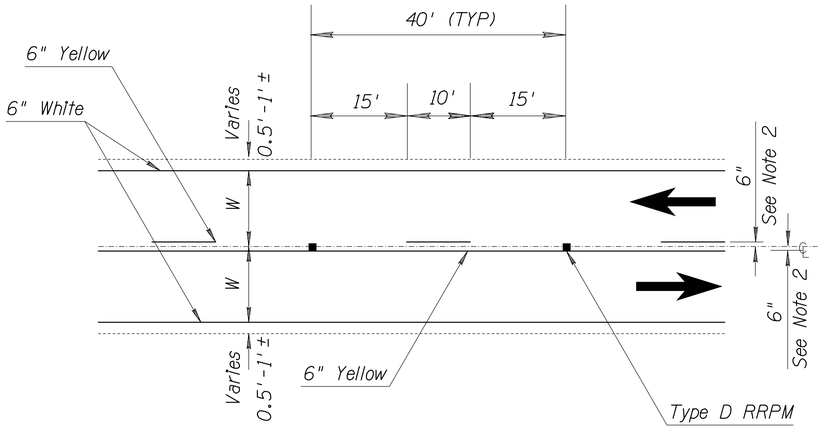

DETAIL C

Passing One-Side (Left)
Direction of Increasing Mile Posts

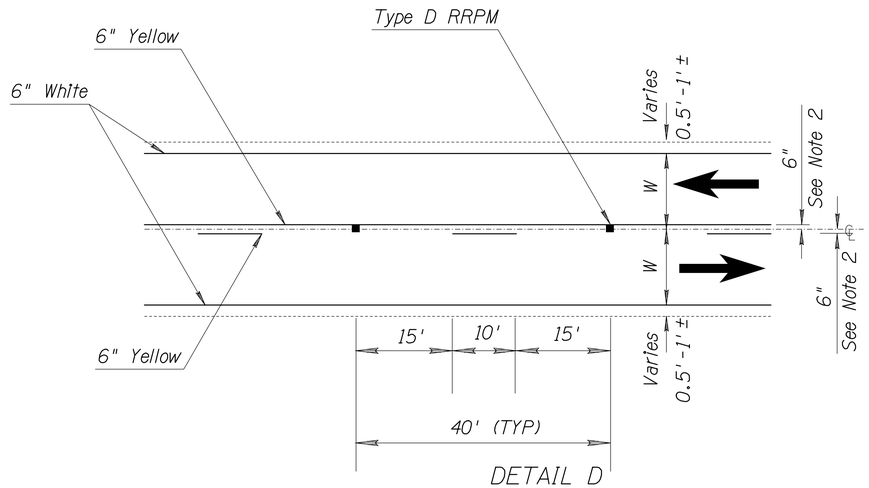

DETAIL D

Passing One-Side (Right)
Direction of Increasing Mile Posts

NOTES:

1. Pavement marking milepost limits are approximate. The contractor shall verify limits prior to installing pavement markings.
2. Roadway segments with existing single solid center line pavement markings shall be replaced with appropriate pavement markings. Existing single center line pavement markings will not be obliterated.
3. Install 18" white stop bar on crossroad/turnout approaches that include existing stop bar and/or stop sign.

WIDTH TABLE	
IRR	W (LF)
1, 20, 21, 24, 29, 30, 35 (MP 8.6-19.1)	11.5'
16, 35 (MP 0.0-8.6), 42	12'

	NAME	DATE
DESIGN	AE	06-16
DRAWN	AE	06-16
CHECKED	KEB	06-16

TRANSPORTATION
AECOM TECHNICAL SERVICES, Inc.
7720 North 16th Street, Suite 100
Phoenix, Arizona 85020
T 602.371.1100
AECOM
www.aecom.com

ARIZONA DEPARTMENT OF TRANSPORTATION
INFRASTRUCTURE DELIVERY AND OPERATIONS DIVISION
TRAFFIC DESIGN SERVICES

PAVEMENT MARKING DETAILS
W/O EDGELINE RUMBLE STRIPS

LOCATION
TOHONO O'ODHAM NATION VARIOUS LOCATIONS

Registered Professional Engineer
45815
KATE E. BONDY
Date Signed 6/14/2016
ARIZONA, U.S.A.
Expires 3/31/2018

DWG NO. T-2.02

TRACS NO. SH643 01C | ITO-0(208)T | ____ OF ____

SURVEY NO. | FINISHED PLANS | REVISIONS | LOCATION | DATE

6/14/2016 P:\60306196\900-Work\910-CAD\001_General\Sheets\Phase 3\t06196pd01(Phase 2 & 3).dgn

F.H.W.A. REGION	STATE	PROJECT NO.	SHEET NO.	TOTAL SHEETS	RECORD DRAWINGS
9	ARIZ.	ITO-0(208)T	11	65	
		0000 PM ITO			

SURVEY NO. | FINISHED PLANS | REVISIONS | LOCATION | DATE

IRR 1 PAVEMENT MARKING

FROM MILEPOST	TO MILEPOST	MARKING DETAIL
0±	0.2±	A
0.2±	0.6±	B
0.6±	1.0±	A
1.0±	1.7±	B
1.7±	2.4±	A
2.4±	3.2±	B
3.2±	3.6±	A
3.6±	6.0±	B
6.0±	6.4±	A
6.4±	6.6±	B
6.6±	7.0±	A
7.0±	7.5±	B
7.5±	8.4±	A
8.4±	8.6±	B
8.6±	8.8±	A
8.8±	9.5±	B
9.5±	9.7±	A
9.7±	9.9±	B
9.9±	10.1±	A
10.1±	10.2±	B
10.2±	10.6±	A
10.6±	10.8±	B
10.8±	11.9±	A
11.9±	12.0±	B
12.0±	12.7±	A
12.7±	12.8±	B
12.8±	12.9±	C
12.9±	13.0±	A
13.0±	13.0±	D
13.0±	13.2±	B
13.2±	13.5±	A
13.5±	13.5±	D
13.5±	14.7±	B
14.7±	15.0±	A
15.0±	16.4±	B

IRR 1 PAVEMENT MARKING (CONT.)

FROM MILEPOST	TO MILEPOST	MARKING DETAIL
16.4±	16.7±	A
16.7±	17.5±	B
17.5±	17.6±	A
17.6±	19.1±	B
19.1±	19.3±	A
19.3±	19.7±	B
19.7±	19.8±	C
19.8±	20.4±	A
20.4±	20.5±	D
20.5±	21.0±	B
21.0±	21.4±	A
21.4±	22.2±	B
22.2±	22.3±	A
22.3±	22.5±	B
22.5±	22.8±	A
22.8±	24.0±	B
24.0±	24.3±	A
24.3±	24.3±	D
24.3±	24.6±	B
24.6±	24.7±	C
24.7±	24.9±	A
24.9±	25.0±	D
25.0±	25.5±	B
25.5±	25.6±	A
25.6±	26.0±	B
26.0±	26.0±	C
26.0±	26.2±	A
26.2±	26.2±	D
26.2±	27.3±	B
27.3±	27.5±	A
27.5±	29.6±	B
29.6±	29.7±	A

IRR 16 PAVEMENT MARKING

FROM MILEPOST	TO MILEPOST	MARKING DETAIL
0±	0.7±	A
0.7±	0.7±	D
0.7±	1.3±	B
1.3±	1.4±	C
1.4±	2.8±	A
2.8±	4.0±	B
4.0±	4.2±	A
4.2±	4.5±	B
4.5±	4.8±	A
4.8±	5.0±	B
5.0±	5.5±	A
5.5±	6.0±	B
6.0±	6.3±	A

IRR 20 PAVEMENT MARKING

FROM MILEPOST	TO MILEPOST	MARKING DETAIL
0±	0.1±	B
0.1±	0.2±	D
0.2±	0.5±	B
0.5±	1.2±	A
1.2±	1.5±	B
1.5±	1.9±	A
1.9±	2.0±	D
2.0±	3.0±	B
3.0±	3.8±	A
3.8±	7.6±	B
7.6±	7.8±	A

NOTES:

1. *Pavement marking milepost limits are approximate. The contractor shall verify limits prior to installing pavement markings.*

	NAME	DATE
DESIGN	AE	06-16
DRAWN	AE	06-16
CHECKED	KEB	06-16

TRANSPORTATION

AECOM TECHNICAL SERVICES, Inc.
7720 North 16th Street, Suite 100
Phoenix, Arizona 85020
T 602.371.1100
AECOM
www.aecom.com

ARIZONA DEPARTMENT OF TRANSPORTATION
INFRASTRUCTURE DELIVERY AND OPERATIONS DIVISION
TRAFFIC DESIGN SERVICES

PAVEMENT MARKING DETAILS

LOCATION
TOHONO O'ODHAM NATION VARIOUS LOCATIONS

Registered Professional Engineer
Kate E. Bondy
45815
KATE E. BONDY
Date Signed 6/14/2016
ARIZONA, U.S.A.
Expires 3/31/2018

DWG NO. T-2.03

TRACS NO. SH643 01C | | ITO-0(208)T | ___ OF ___

6/14/2016 P:\60306196\900-Work\910-CAD\001_General\Sheets\Phase 3\t06196pd05(Phase 3).dgn

F.H.W.A. REGION	STATE	PROJECT NO.	SHEET NO.	TOTAL SHEETS	RECORD DRAWINGS
9	ARIZ.	ITO-0(208)T	12	65	

0000 PM ITO

IRR 21 PAVEMENT MARKING		
FROM MILEPOST	TO MILEPOST	MARKING DETAIL
11.5±	12.3±	A
12.3±	16.2±	B
16.2±	16.5±	A
16.5±	18.3±	B
18.3±	20.1±	A
20.1±	21.8±	B
21.8±	22.2±	A
22.2±	23.0±	B
23.0±	23.3±	A
23.3±	26.0±	B
26.0±	26.4±	A
26.4±	28.9±	B
28.9±	29.0±	A

IRR 24 PAVEMENT MARKING		
FROM MILEPOST	TO MILEPOST	MARKING DETAIL
0±	0.4±	A
0.4±	1.6±	B
1.6±	1.7±	A
1.7±	5.0±	B
5.0±	5.1±	A
5.1±	5.9±	B
5.9±	6.3±	A
6.3±	7.6±	B
7.6±	8.8±	A
8.8±	9.1±	B
9.1±	10.1±	A
10.1±	10.8±	B

* IRR 29 PAVEMENT MARKING		
FROM MILE	TO MILE	MARKING DETAIL
SEGMENT 1		
0±	0.2±	A
0.2±	1.0±	B
1.0±	1.9±	A
1.9±	2.2±	B
2.2±	2.6±	A
2.6±	3.4±	B
3.4±	3.6±	A
3.6±	3.8±	B
3.8±	3.8±	A
SEGMENT 2		
2.1±	3.1±	B
3.1±	3.2±	C
3.2±	3.3±	A
3.3±	3.3±	D
3.3±	4.1±	B
SEGMENT 3		
0±	0.1±	A
0.1±	0.6±	B
0.6±	0.7±	A

* No existing milepost markers. Mile limits provided for reference. See Detail A4.

IRR 30 PAVEMENT MARKING (SEGMENT 1)		
FROM MILEPOST	TO MILEPOST	MARKING DETAIL
0±	0.1±	A
0.1±	5.1±	A
5.1±	9.1±	A

NOTES:

1. Pavement marking milepost limits are approximate. The contractor shall verify limits prior to installing pavement markings.

	NAME	DATE
DESIGN	AE	06-16
DRAWN	AE	06-16
CHECKED	KEB	06-16

TRANSPORTATION

AECOM TECHNICAL SERVICES, Inc.
7720 North 16th Street, Suite 100
Phoenix, Arizona 85020
T 602.371.1100
www.aecom.com

ARIZONA DEPARTMENT OF TRANSPORTATION
INFRASTRUCTURE DELIVERY AND OPERATIONS DIVISION
TRAFFIC DESIGN SERVICES

PAVEMENT MARKING DETAILS

LOCATION
TOHONO O'ODHAM NATION VARIOUS LOCATIONS

Registered Professional Engineer
KATE E. BONDY
45815
Date Signed 6/16/2016
ARIZONA, U.S.A.
Expires 3/31/2018

DWG NO. T-2.04

TRACS NO. SH643 01C | ITO-0(208)T | ___ OF ___

6/14/2016 P:\60306196\900-Work\910-CAD\001_General\Sheets\Phase 3\t06196pd06(Phase 3).dgn

SURVEY NO. | FINISHED PLANS | REVISIONS | LOCATION | DATE

F.H.W.A. REGION	STATE	PROJECT NO.	SHEET NO.	TOTAL SHEETS	RECORD DRAWINGS
9	ARIZ.	ITO-0(208)T	13	65	

0000 PM ITO

IRR 30 PAVEMENT MARKING (SEGMENT 2)

FROM MILEPOST	TO MILEPOST	MARKING DETAIL
16.0±	24.0±	A
24.0±	24.1±	C
24.1±	24.1±	A

IRR 35 PAVEMENT MARKING

FROM MILEPOST	TO MILEPOST	MARKING DETAIL
0±	0.1±	A
0.1±	7.4±	B
7.4±	7.8±	A
7.8±	8.6±	B
8.6±	8.8±	A
8.8±	10.5±	B
10.5±	10.6±	C
10.6±	11.0±	A
11.0±	11.5±	B
11.5±	11.6±	C
11.6±	11.7±	D
11.7±	19.1±	B

IRR 42 PAVEMENT MARKING

FROM MILEPOST	TO MILEPOST	MARKING DETAIL
0±	0.1±	A
0.1±	0.5±	B
0.5±	0.6±	C
0.6±	0.8±	A
0.8±	1.2±	B
1.2±	1.4±	A
1.4±	1.5±	D
1.5±	2.2±	B
2.2±	2.3±	C
2.3±	2.7±	A
2.7±	2.8±	D
2.8±	5.0±	B
5.0±	5.1±	C
5.1±	5.5±	A
5.5±	5.6±	D
5.6±	6.0±	B
6.0±	6.1±	C
6.1±	6.6±	A
6.6±	6.7±	D
6.7±	7.4±	B
7.4±	7.5±	D
7.5±	8.3±	A
8.3±	8.4±	D
8.4±	11.2±	B
11.2±	11.3±	C
11.3±	11.6±	A
11.6±	11.7±	D
11.7±	12.1±	B
12.1±	12.4±	A

IRR 42 PAVEMENT MARKING (CONT.)

FROM MILEPOST	TO MILEPOST	MARKING DETAIL
12.4±	13.0±	B
13.0±	13.1±	C
13.1±	13.9±	A
13.9±	14.0±	D
14.0±	15.2±	B
15.2±	15.4±	C
15.4±	15.5±	D
15.5±	16.8±	B
16.8±	16.9±	C
16.9±	17.1±	D
17.1±	17.7±	B
17.7±	17.8±	C
17.8±	18.1±	A
18.1±	18.2±	D
18.2±	18.7±	B
18.7±	18.8±	C
18.8±	19.1±	A

NOTES:

1. Pavement marking milespost limits are approximate. The contractor shall verify limits prior to installing pavement markings.

	NAME	DATE
DESIGN	AE	06-16
DRAWN	AE	06-16
CHECKED	KEB	06-16

TRANSPORTATION
AECOM TECHNICAL SERVICES, Inc.
7720 North 16th Street, Suite 100
Phoenix, Arizona 85020
T 602.371.1100
AECOM
www.aecom.com

ARIZONA DEPARTMENT OF TRANSPORTATION
INFRASTRUCTURE DELIVERY AND OPERATIONS DIVISION
TRAFFIC DESIGN SERVICES

PAVEMENT MARKING DETAILS

Registered Professional Engineer (Civil)
CERTIFICATE NO. 45815
KATE E. BONDY
Date Signed 6/16/2016
ARIZONA, U.S.A.
Expires 3/31/2019

LOCATION
TOHONO O'ODHAM NATION VARIOUS LOCATIONS

DWG NO. T-2.05

TRACS NO. SH643 01C | ITO-0(208)T | ____ OF ____

SURVEY NO. | FINISHED PLANS- | REVISIONS- | LOCATION- | DATE-

6/14/2016 P:\60306196\900-Work\910-CAD\001_General\Sheets\Phase 3\t06196pd07(Phase 3).dgn

F.H.W.A. REGION	STATE	PROJECT NO.	SHEET NO.	TOTAL SHEETS	RECORD DRAWINGS
9	ARIZ.	ITO-0(208)T	14	65	

0000 PM ITO

Plan Sheet No.	Sign Number	MOAS Sign Code	Work: New	Work: Existing: Replace Panel	Work: Existing: Relocate Panel	Work: Existing: Modify Legend	Work: Existing: Remove	Work: Existing: To Remain	Offset (ft)	Mounting Height	Background Color	Panel: Legend	Panel: Width (in)	Panel: Height (in)	Panel: Area (sq ft)	Panel: Type	Panel: Sheeting Type	Panel: Bid Item Number	Ground Mounted: Foundations	Ground Mounted: Post: Type	Ground Mounted: Post: Total Length (ft)	Ground Mounted: New Slipbases	Stringer: Type	Stringer: Total Length (ft)	Overhead: Structure Type	Overhead: No. of Lights	Remarks
	N-MP0.2	W14-3AZ	×						12	7	YL	NO PASSING ZONE	48	36	6	RWM		6080005	2	2 1/2S	25	2					
	N-MP0.6A	W11-4	×				×		12	7	YL	Cattle Crossing Symbol	30	30	6	RWM		6080005	1	2 1/2S	11						
	N-MP0.6B	W14-3AZ	×						12	7	YL	NO PASSING ZONE	48	36	6	RWM		6080005	2	2 1/2S	25	2					
	N-MP0.7	R2-1	×				×		12	7	WH	SPEED LIMIT 55	24	30	5	RWM		6080005	1	2 1/2S	12						
	N-MP0.9	M1-10a	×				×		12	7	BL	INDIAN 1	24	24	4	RWM		6080005	1	2S	11						
	N-MP1	D10-1AZ	×				×		12		GR	MILE 1						7030095									
	+	D10-1AZ	×								GR	MILE 1						7030095									Mount Sign Panel Back to Back
	N-MP1.1	W1-2R	×				×		12	7	YL	Right Curve Symbol	30	30	6	RWM		6080005	1	2 1/2S	11						
	N-MP1.7	W14-3AZ	×						12	7	YL	NO PASSING ZONE	48	36	6	RWM		6080005	2	2 1/2S	25	2					
	N-MP1.9	OM-3(1)R	×								YL	Type 3(1) R						7030080									
	N-MP2	D10-1AZ	×				×		12		GR	MILE 2						7030095									
	+	D10-1AZ	×								GR	MILE 2						7030095									Mount Sign Panel Back to Back
	N-MP2.0A	OM-3(1)R	×								YL	Type 3(1) R						7030080									
	N-MP2.0B	W8-33	×				×		12	7	YL	DO NOT ENTER WHEN FLOODED	48	24	8	RWM		6080005	2	2S	23						
	N-MP2.1	W8-19	×								YL	Depth Gage	12	72	6	RWM		6080005	1	2S	7						
	N-MP2.4	W14-3AZ	×				×		12	7	YL	NO PASSING ZONE	48	36	6	RWM		6080005	2	2 1/2S	25	2					
	N-MP3	D10-1AZ	×				×		12		GR	MILE 3						7030095									
	+	D10-1AZ	×								GR	MILE 3						7030095									Mount Sign Panel Back to Back
	N-MP3.1	OM-3(1)R	×								YL	Type 3(1) R						7030080									
	N-MP3.2	W14-3AZ	×						12	7	YL	NO PASSING ZONE	48	36	6	RWM		6080005	2	2 1/2S	25	2					
	N-MP3.6	W14-3AZ	×						12	7	YL	NO PASSING ZONE	48	36	6	RWM		6080005	2	2 1/2S	25	2					
	N-MP3.8	OM-3(1)R	×								YL	Type 3(1) R						7030080									

Notes:
1. The Contractor shall verify post lengths and elevations.
2. The Engineer may shift a sign in order to achieve a more desirable location.
3. Quantities are approximate and for the Contractor's information only.
4. Offsets are measured from white edge line to edge of sign panel closest to roadway. Where there is no white edge line, measurement shall be taken from face of curb.

Panel Types:
- RWM: Regulatory, Warning, or Marker
- F-DA: Flat-sheet aluminum with direct applied characters
- FYP: Fluorescent Yellow Prismatic
- EXT: Extruded Aluminum

Stringer Types:
- P: Perforated square-tube post
- T: T-section support

Structure Types:
- TT: Tapered tube, single beam

Post Types:
- 2S: 2" Single Perforated
- 2 1/2S: 2 1/2" Single Perforated
- 2 1/2T: 2 1/2" Telescoping

	NAME	DATE
DESIGN	AE	06-16
DRAWN	AE	06-16
CHECKED	KEB	06-16

TRANSPORTATION
AECOM TECHNICAL SERVICES, Inc.
7720 North 16th Street, Suite 100
Phoenix, Arizona 85020
T 602.371.1100
AECOM
www.aecom.com

ARIZONA DEPARTMENT OF TRANSPORTATION
INFRASTRUCTURE DELIVERY AND OPERATIONS DIVISION
TRAFFIC DESIGN SERVICES

SIGN SUMMARY
NB-IRR 1

Registered Professional Engineer
C. E.
45815
KATE E. BONDY
Date Signed 6/15/2016
ARIZONA, U.S.A.
Expires 3/31/2018

LOCATION
TOHONO O'ODHAM NATION VARIOUS LOCATIONS

DWG NO. T-3.01

TRACS NO. SH643 01C | ITO-0(208)T | ____ OF ____

6/16/2016 P:¢60306196¢900-Work¢910-CAD¢006_Civil¢Sheets¢NB-IRI_signsummary_01.dgn

DATE | MADE BY | DESCRIPTION OF REVISION
NO.2
NO.1

Plan Sheet No.	Sign Number	MOAS Sign Code	Work: New	Work: Existing: Replace Panel	Work: Existing: Relocate Panel	Work: Existing: Modify Legend	Work: Existing: Remove	Work: Existing: To Remain	Offset (ft)	Mounting Height	Background Color	Panel: Legend	Panel: Width (in)	Panel: Height (in)	Panel: Area (sq ft)	Panel: Type	Panel: Sheeting Type	Panel: Bid Item Number	Ground Mounted: Foundations	Ground Mounted: Post: Type	Ground Mounted: Post: Total Length (ft)	Ground Mounted: New Slipbases	Stringer: Type	Stringer: Total Length (ft)	Overhead: Structure Type	Overhead: No. of Lights	Remarks
	N-MP4	D10-1AZ	×				×		12		GR	MILE 4						7030095									
	+	D10-1AZ	×								GR	MILE 4						7030095									Mount Sign Panel Back to Back
	N-MP4.2	OM-3(1)R	×								YL	Type 3(1) R						7030080									
	N-MP4.5	OM-3(1)R	×								YL	Type 3(1) R						7030080									
	N-MP4.8	OM-3(1)R	×								YL	Type 3(1) R						7030080									
	N-MP5	D10-1AZ	×				×		12		GR	MILE 5						7030095									
	+	D10-1AZ	×								GR	MILE 5						7030095									Mount Sign Panel Back to Back
	N-MP6	D10-1AZ	×				×		12		GR	MILE 6						7030095									
	+	D10-1AZ	×								GR	MILE 6						7030095									Mount Sign Panel Back to Back
	N-MP6.05	W14-3AZ	×						12	7	YL	NO PASSING ZONE	48	36	6	RWM		6080005	2	2 1/2S	25	2					
	N-MP6.1	W1-2R	×				×		12	7	YL	Right Curve Symbol	30	30	6	RWM		6080005	1	2 1/2S	11						
	N-MP6.3	OM-3(1)R	×								YL	Type 3(1) R						7030080									
	N-MP6.6	W14-3AZ	×						12	7	YL	NO PASSING ZONE	48	36	6	RWM		6080005	2	2 1/2S	25	2					
	N-MP7	D10-1AZ	×				×		12		GR	MILE 7						7030095									
	+	D10-1AZ	×								GR	MILE 7						7030095									Mount Sign Panel Back to Back
	N-MP7.4	OM-3(1)R	×								YL	Type 3(1) R						7030080									
	N-MP7.5	W14-3AZ	×						12	7	YL	NO PASSING ZONE	48	36	6	RWM		6080005	2	2 1/2S	25	2					
	N-MP7.7	OM-3(1)R	×								YL	Type 3(1) R						7030080									
	N-MP8	D10-1AZ	×				×		12		GR	MILE 8						7030095									
	+	D10-1AZ	×								GR	MILE 8						7030095									Mount Sign Panel Back to Back
	N-MP8.1	OM-3(1)R	×								YL	Type 3(1) R						7030080									
	N-MP8.2	OM-3(1)R	×								YL	Type 3(1) R						7030080									
	N-MP8.3	OM-3(1)R	×								YL	Type 3(1) R						7030080									
	N-MP8.4	OM-3(1)R	×								YL	Type 3(1) R						7030080									
	N-MP8.6	W14-3AZ	×						12	7	YL	NO PASSING ZONE	48	36	6	RWM		6080005	2	2 1/2S	25	2					

F.H.W.A. REGION	STATE	PROJECT NO.	SHEET NO.	TOTAL SHEETS	RECORD DRAWINGS
9	ARIZ.	ITO-0(208)T	15	65	

0000 PM ITO

DATE | MADE BY | NO.2 DESCRIPTION OF REVISION | DATE | MADE BY | NO.1 DESCRIPTION OF REVISION

Notes:
1. The Contractor shall verify post lengths and elevations.
2. The Engineer may shift a sign in order to achieve a more desirable location.
3. Quantities are approximate and for the Contractor's information only.
4. Offsets are measured from white edge line to edge of sign panel closest to roadway. Where there is no white edge line, measurement shall be taken from face of curb.

Panel Types:
- RWM: Regulatory, Warning, or Marker
- F-DA: Flat-sheet aluminum with direct applied characters
- FYP: Fluorescent Yellow Prismatic
- EXT: Extruded Aluminum

Stringer Types:
- P: Perforated square-tube post
- T: T-section support

Structure Types:
- TT: Tapered tube, single beam

Post Types:
- 2S: 2" Single Perforated
- 2 1/2S: 2 1/2" Single Perforated
- 2 1/2T: 2 1/2" Telescoping

	NAME	DATE
DESIGN	AE	06-16
DRAWN	AE	06-16
CHECKED	KEB	06-16

TRANSPORTATION
AECOM TECHNICAL SERVICES, Inc.
7720 North 16th Street, Suite 100
Phoenix, Arizona 85020
T 602.371.1100
AECOM
www.aecom.com

ARIZONA DEPARTMENT OF TRANSPORTATION
INFRASTRUCTURE DELIVERY AND OPERATIONS DIVISION
TRAFFIC DESIGN SERVICES

SIGN SUMMARY
NB-IRR 1

Registered Professional Engineer
C. E.
45815
KATE E. BONDY
Date Signed 6/15/2016
ARIZONA, U.S.A.
Expires 3/31/2018

LOCATION
TOHONO O'ODHAM NATION VARIOUS LOCATIONS

DWG NO. T-3.02

TRACS NO. SH643 01C | ITO-0(208)T | ____ OF ____

6/16/2016 P:\60306196\900-Work\910-CAD\006_Civil\Sheets\NB-IR1_signsummary_02.dgn

Plan Sheet No.	Sign Number	MOAS Sign Code	Work						Offset (ft)	Mounting Height	Background Color	Panel							Ground Mounted			Stringer			Overhead		Remarks
			New	Existing								Legend	Width (in)	Height (in)	Area (sq ft)	Type	Sheeting Type	Bid Item Number	Foundations	Post		New Slipbases	Type	Total Length (ft)	Structure Type	No. of Lights	
				Replace Panel	Relocate Panel	Modify Legend	Remove	To Remain												Type	Total Length (ft)						
	N-MP8.7	W1-2L	×						12	7	YL	Left Curve Symbol	30	30	6	RWM		6080005	1	2 1/2S	11						
	N-MP8.8	OM-3(1)R	×								YL	Type 3(1) R						7030080									
	N-MP9	D10-1AZ	×				×		12		GR	MILE 9						7030095									
	+	D10-1AZ	×								GR	MILE 9						7030095									Mount Sign Panel Back to Back
	N-MP9.1	OM-3(1)R	×								YL	Type 3(1) R						7030080									
	N-MP9.2	OM-3(1)R	×								YL	Type 3(1) R						7030080									
	N-MP9.3	OM-3(1)R	×								YL	Type 3(1) R						7030080									
	N-MP9.4	OM-3(1)R	×								YL	Type 3(1) R						7030080									
	N-MP9.5	W14-3AZ	×						12	7	YL	NO PASSING ZONE	48	36	6	RWM		6080005	2	2 1/2S	25	2					
	N-MP9.7	OM-3(1)R	×								YL	Type 3(1) R						7030080									
	N-MP9.8	R1-1	×				×				RD	STOP	30	30	6	RWM		6080005	1	2 1/2S	12						Side Road
	N-MP9.9	W14-3AZ	×						12	7	YL	NO PASSING ZONE	48	36	6	RWM		6080005	2	2 1/2S	25	2					
	N-MP10	D10-2AZ	×				×		12		GR	MILE 10						7030095									
	+	D10-2AZ	×								GR	MILE 10						7030095									Mount Sign Panel Back to Back
	N-MP10.0	M1-10a	×				×		12	7	BL	INDIAN 1	24	24	4	RWM		6080005	1	2S	11						
	N-MP10.2	W14-3AZ	×						12	7	YL	NO PASSING ZONE	48	36	6	RWM		6080005	2	2 1/2S	25	2					
	N-MP10.4	OM-3(1)R	×								YL	Type 3(1) R						7030080									
	N-MP10.5	OM-3(1)R	×								YL	Type 3(1) R						7030080									
	N-MP10.8	W14-3AZ	×						12	7	YL	NO PASSING ZONE	48	36	6	RWM		6080005	2	2 1/2S	25	2					
	N-MP11	D10-2AZ	×				×		12		GR	MILE 11						7030095									
	+	D10-2AZ	×								GR	MILE 11						7030095									Mount Sign Panel Back to Back
	N-MP11.3	OM-3(1)R	×								YL	Type 3(1) R						7030080									
	N-MP11.5	OM-3(1)R	×								YL	Type 3(1) R						7030080									
	N-MP11.6	OM-3(1)R	×								YL	Type 3(1) R						7030080									

F.H.W.A. REGION	STATE	PROJECT NO.	SHEET NO.	TOTAL SHEETS	RECORD DRAWINGS
9	ARIZ.	ITO-0(208)T	16	65	

0000 PM ITO

Notes:
1. The Contractor shall verify post lengths and elevations.
2. The Engineer may shift a sign in order to achieve a more desirable location.
3. Quantities are approximate and for the Contractor's information only.
4. Offsets are measured from white edge line to edge of sign panel closest to roadway. Where there is no white edge line, measurement shall be taken from face of curb.

Panel Types:
- RWM: Regulatory, Warning, or Marker
- F-DA: Flat-sheet aluminum with direct applied characters
- FYP: Fluorescent Yellow Prismatic
- EXT: Extruded Aluminum

Stringer Types:
- P: Perforated square-tube post
- T: T-section support

Structure Types:
- TT: Tapered tube, single beam

Post Types:
- 2S: 2" Single Perforated
- 2 1/2S: 2 1/2" Single Perforated
- 2 1/2T: 2 1/2" Telescoping

	NAME	DATE
DESIGN	AE	06-16
DRAWN	AE	06-16
CHECKED	KEB	06-16

TRANSPORTATION
AECOM TECHNICAL SERVICES, Inc.
7720 North 16th Street, Suite 100
Phoenix, Arizona 85020
T 602.371.1100
AECOM
www.aecom.com

ARIZONA DEPARTMENT OF TRANSPORTATION
INFRASTRUCTURE DELIVERY AND OPERATIONS DIVISION
TRAFFIC DESIGN SERVICES

SIGN SUMMARY
NB-IRR 1

Registered Professional Engineer
C. E.
45815
KATE E. BONDY
Date Signed 6/16/16
ARIZONA, U.S.A.
Expires 3/31/2018

LOCATION
TOHONO O'ODHAM NATION VARIOUS LOCATIONS

DWG NO. T-3.03

TRACS NO. SH643 01C | | ITO-0(208)T | ____ OF ____

6/16/2016 P:\60306196\900-Work\910-CAD\006_Civil\Sheets\NB-IR1_signsummary_03.dgn

DATE | MADE BY | NO.2 DESCRIPTION OF REVISION | DATE | MADE BY | NO.1 DESCRIPTION OF REVISION

Plan Sheet No.	Sign Number	MOAS Sign Code	Work						Offset (ft)	Mounting Height	Background Color	Panel							Ground Mounted			Stringer		Overhead		Remarks
			New	Existing								Legend	Width (in)	Height (in)	Area (sq ft)	Type	Sheeting Type	Bid Item Number	Foundations	Post Type	Post Total Length (ft)	New Slipbases	Type	Total Length (ft)	Structure Type	No. of Lights	
				Replace Panel	Relocate Panel	Modify Legend	Remove	To Remain																		
	N-MP12A	W14-3AZ	×						12	7	YL	NO PASSING ZONE	48	36	6	RWM		6080005	2	2 1/2S	25	2				
	N-MP12B	D10-2AZ	×				×		12		GR	MILE 12						7030095								
	+	D10-2AZ	×								GR	MILE 12						7030095								Mount Sign Panel Back to Back
	N-MP12.1	OM-3(1)R	×								YL	Type 3(1) R						7030080								
	N-MP12.2A	W1-8L	×				×		12	5	YL	Left Chevron	24	30	5	RWM		6080005	1	2 1/2S	12					
	N-MP12.2B	W1-8L	×				×		12	5	YL	Left Chevron	24	30	5	RWM		6080005	1	2 1/2S	12					
	+	W1-8R	×				×			5	YL	Right Chevron	24	30	5	RWM		6080005								Mount Sign Panel Back to Back
	N-MP12.2C	W1-8L	×				×		12	5	YL	Left Chevron	24	30	5	RWM		6080005	1	2 1/2S	12					
	+	W1-8R	×				×			5	YL	Right Chevron	24	30	5	RWM		6080005								Mount Sign Panel Back to Back
	N-MP12.2D	W1-8L	×				×		12	5	YL	Left Chevron	24	30	5	RWM		6080005	1	2 1/2S	12					
	+	W1-8R	×				×			5	YL	Right Chevron	24	30	5	RWM		6080005								Mount Sign Panel Back to Back
	N-MP12.2E	W1-8L	×				×		12	5	YL	Left Chevron	24	30	5	RWM		6080005	1	2 1/2S	12					
	+	W1-8R	×				×			5	YL	Right Chevron	24	30	5	RWM		6080005								Mount Sign Panel Back to Back
	N-MP12.2F	W1-8R	×				×		12	5	YL	Right Chevron	24	30	5	RWM		6080005	1	2 1/2S	12					Faces SB Direction
	N-MP12.3A	OM-3(1)R	×								YL	Type 3(1) R						7030080								
	N-MP12.3B	OM-3(1)L	×								YL	Type 3(1) L						7030080								
	N-MP12.3C	W3-5aAZ	×								WH	SPEED REDUCED AHEAD	36	36	9	RWM		6080005	2	2 1/2S	27	2				
	N-MP12.4	R2-1	×				×		12	7	WH	SPEED LIMIT 45	24	30	5	RWM		6080005	1	2 1/2S	12					
	N-MP12.5	OM-3(1)R	×								YL	Type 3(1) R						7030080								
	N-MP12.8	W14-3AZ	×						12	7	YL	NO PASSING ZONE	48	36	6	RWM		6080005	2	2 1/2S	25	2				
	N-MP13	D10-2AZ	×				×		12		GR	MILE 13						7030095								
	+	D10-2AZ	×								GR	MILE 13						7030095								Mount Sign Panel Back to Back
	N-MP13.1	OM-3(1)R	×								YL	Type 3(1) R						7030080								
	N-MP13.2A	W14-3AZ	×						12	7	YL	NO PASSING ZONE	48	36	6	RWM		6080005	2	2 1/2S	25	2				
	N-MP13.2B	OM-3(1)R	×								YL	Type 3(1) R						7030080								
	N-MP13.3A	OM-3(1)R	×								YL	Type 3(1) R						7030080								
	N-MP13.3B	OM-3(1)L	×								YL	Type 3(1) L						7030080								
	N-MP13.5	OM-3(1)R	×								YL	Type 3(1) R						7030080								

Notes:
1. The Contractor shall verify post lengths and elevations.
2. The Engineer may shift a sign in order to achieve a more desirable location.
3. Quantities are approximate and for the Contractor's information only.
4. Offsets are measured from white edge line to edge of sign panel closest to roadway. Where there is no white edge line, measurement shall be taken from face of curb.

Panel Types:
- RWM: Regulatory, Warning, or Marker
- F-DA: Flat-sheet aluminum with direct applied characters
- FYP: Fluorescent Yellow Prismatic
- EXT: Extruded Aluminum

Stringer Types:
- P: Perforated square-tube post
- T: T-section support

Structure Types:
- TT: Tapered tube, single beam

Post Types:
- 2S: 2" Single Perforated
- 2 1/2S: 2 1/2" Single Perforated
- 2 1/2T: 2 1/2" Telescoping

F.H.W.A. REGION	STATE	PROJECT NO.	SHEET NO.	TOTAL SHEETS	RECORD DRAWINGS
9	ARIZ.	ITO-0(208)T	17	65	
		0000 PM ITO			

	NAME	DATE
DESIGN	AE	06-16
DRAWN	AE	06-16
CHECKED	KEB	06-16

TRANSPORTATION
AECOM TECHNICAL SERVICES, Inc.
7720 North 16th Street, Suite 100
Phoenix, Arizona 85020
T 602.371.1100
AECOM
www.aecom.com

ARIZONA DEPARTMENT OF TRANSPORTATION
INFRASTRUCTURE DELIVERY AND OPERATIONS DIVISION
TRAFFIC DESIGN SERVICES

SIGN SUMMARY
NB-IRR 1

Registered Professional Engineer
C. E.
45815
KATE E. BONDY
Date Signed 6/17/2016
ARIZONA, U.S.A.
Expires 3/31/2018

LOCATION
TOHONO O'ODHAM NATION VARIOUS LOCATIONS

DWG NO. T-3.04

TRACS NO. SH643 01C | ITO-0(208)T | ____ OF ____

6/16/2016 P:\60306196\900-Work\910-CAD\006_Civil\Sheets\NB-IR1_signsummary_04.dgn

NO.1 DESCRIPTION OF REVISION | DATE | MADE BY
NO.2 DESCRIPTION OF REVISION | DATE | MADE BY

Plan Sheet No.	Sign Number	MOAS Sign Code	Work						Offset (ft)	Mounting Height	Background Color	Panel							Ground Mounted				Stringer		Overhead		Remarks
				Existing																Post								
			New	Replace Panel	Relocate Panel	Modify Legend	Remove	To Remain				Legend	Width (in)	Height (in)	Area (sq ft)	Type	Sheeting Type	Bid Item Number	Foundations	Type	Total Length (ft)	New Slipbases	Type	Total Length (ft)	Structure Type	No. of Lights	
	N-MP14	D10-2AZ	×				×		12		GR	MILE 14						7030095									
	+	D10-2AZ	×								GR	MILE 14						7030095									Mount Sign Panel Back to Back
	N-MP14.7	W14-3AZ	×						12	7	YL	NO PASSING ZONE	48	36	6	RWM		6080005	2	2 1/2S	25	2					
	N-MP14.9	OM-3(1)R	×								YL	Type 3(1) R						7030080									
	N-MP15	D10-2AZ	×				×		12		GR	MILE 15						7030095									
	+	D10-2AZ	×								GR	MILE 15						7030095									Mount Sign Panel Back to Back
	N-MP15.1A	OM-3(1)R	×				×				YL	Type 3(1) R						7030080									
	N-MP15.1B	OM-3(1)L	×				×				YL	Type 3(1) L						7030080									
	N-MP15.5A	OM-3(1)R	×								YL	Type 3(1) R						7030080									
	N-MP15.5B	OM-3(1)L	×								YL	Type 3(1) L						7030080									
	N-MP15.6	OM-3(1)R	×								YL	Type 3(1) R						7030080									
	N-MP15.7	OM-3(1)R	×								YL	Type 3(1) R						7030080									
	N-MP15.8	OM-3(1)R	×								YL	Type 3(1) R						7030080									
	N-MP16	D10-2AZ	×				×		12		GR	MILE 16						7030095									
	+	D10-2AZ	×								GR	MILE 16						7030095									Mount Sign Panel Back to Back
	N-MP16.2	OM-3(1)R	×								YL	Type 3(1) R						7030080									
	N-MP16.3	OM-3(1)R	×								YL	Type 3(1) R						7030080									
	N-MP16.4	W14-3AZ	×						12	7	YL	NO PASSING ZONE	48	36	6	RWM		6080005	2	2 1/2S	25	2					
	N-MP16.8A	OM-3(1)R	×								YL	Type 3(1) R						7030080									
	N-MP16.8B	OM-3(1)R	×				×				YL	Type 3(1) R						7030080									
	N-MP16.8C	OM-3(1)L	×				×				YL	Type 3(1) L						7030080									
	N-MP17	D10-2AZ	×				×		12		GR	MILE 17						7030095									
	+	D10-2AZ	×								GR	MILE 17						7030095									Mount Sign Panel Back to Back
	N-MP17.2	OM-3(1)R	×								YL	Type 3(1) R						7030080									
	N-MP17.3	OM-3(1)R	×								YL	Type 3(1) R						7030080									
	N-MP17.4	OM-3(1)R	×								YL	Type 3(1) R						7030080									
	N-MP17.5	W14-3AZ	×						12	7	YL	NO PASSING ZONE	48	36	6	RWM		6080005	2	2 1/2S	25	2					

F.H.W.A. REGION	STATE	PROJECT NO.	SHEET NO.	TOTAL SHEETS	RECORD DRAWINGS
9	ARIZ.	ITO-0(208)T	18	65	

0000 PM ITO

DATE | MADE BY | DESCRIPTION OF REVISION

NO.2

NO.1

Notes:
1. The Contractor shall verify post lengths and elevations.
2. The Engineer may shift a sign in order to achieve a more desirable location.
3. Quantities are approximate and for the Contractor's information only.
4. Offsets are measured from white edge line to edge of sign panel closest to roadway. Where there is no white edge line, measurement shall be taken from face of curb.

Panel Types:
- RWM: Regulatory, Warning, or Marker
- F-DA: Flat-sheet aluminum with direct applied characters
- FYP: Fluorescent Yellow Prismatic
- EXT: Extruded Aluminum

Stringer Types:
- P: Perforated square-tube post
- T: T-section support

Structure Types:
- TT: Tapered tube, single beam

Post Types:
- 2S: 2" Single Perforated
- 2 1/2S: 2 1/2" Single Perforated
- 2 1/2T: 2 1/2" Telescoping

	NAME	DATE
DESIGN	AE	06-16
DRAWN	AE	06-16
CHECKED	KEB	06-16

TRANSPORTATION
AECOM TECHNICAL SERVICES, Inc.
7720 North 16th Street, Suite 100
Phoenix, Arizona 85020
T 602.371.1100
AECOM
www.aecom.com

ARIZONA DEPARTMENT OF TRANSPORTATION
INFRASTRUCTURE DELIVERY AND OPERATIONS DIVISION
TRAFFIC DESIGN SERVICES

SIGN SUMMARY
NB-IRR 1

Registered Professional Engineer
C. E.
45815
KATE E. BONDY
Date Signed 6/15/2016
ARIZONA, U.S.A.
Expires 3/31/2018

LOCATION
TOHONO O'ODHAM NATION VARIOUS LOCATIONS

DWG NO. T-3.05

TRACS NO. SH643 01C | ITO-0(208)T | ____ OF ____

6/16/2016 P:\60306196\900-Work\910-CAD\006_Civil\Sheets\NB-IR1_signsummary_05.dgn

Plan Sheet No.	Sign Number	MOAS Sign Code	Work						Offset (ft)	Mounting Height	Background Color	Panel							Ground Mounted			Stringer		Overhead		Remarks
			New	Existing																Post						
				Replace Panel	Relocate Panel	Modify Legend	Remove	To Remain				Legend	Width (in)	Height (in)	Area (sq ft)	Type	Sheeting Type	Bid Item Number	Foundations	Type	Total Length (ft)	New Slipbases	Type	Total Length (ft)	Structure Type	No. of Lights	
	N-MP17.9	W3-5aAZ	×								WH	SPEED REDUCED AHEAD	36	36	9	RWM		6080005	2	2 1/2S	27	2					
	N-MP18	D10-2AZ	×				×		12		GR	MILE 18						7030095									
	+	D10-2AZ	×								GR	MILE 18						7030095									Mount Sign Panel Back to Back
	N-MP18.1	R2-1	×				×		12	7	WH	SPEED LIMIT 35	24	30	5	RWM		6080005	1	2 1/2S	12						
	N-MP18.9	R1-1	×				×				RD	STOP	30	30	6	RWM		608005	1	2 1/2S	12						Side Road
	N-MP19	D10-2AZ	×				×		12		GR	MILE 19						7030095									
	+	D10-2AZ	×								GR	MILE 19						7030095									Mount Sign Panel Back to Back
	N-MP19.0A	OM-3(1)R	×				×				YL	Type 3(1) R						7030080									
	N-MP19.0B	OM-3(1)L	×				×				YL	Type 3(1) L						7030080									
	N-MP19.03	M1-10a	×						12	7	BL	INDIAN 1	24	24	4	RWM		6080005	1	2 1/2S	13						
	+	M6-1L	X									Left Arrow	24	18	3	RWM		6080005									
	N-MP19.05	W8-3	×				×		12	7	YL	PAVEMENT ENDS	30	30	6	RWM		6080005	2	2 1/2S	24	2					Place at Indian Route 28
	+	W16-101P									YL	500 FT AHEAD	36	18	5	RWM		6080005									
	N-MP19.1	W14-3AZ	×						12	7	YL	NO PASSING ZONE	48	36	6	RWM		6080005	2	2 1/2S	25	2					
	N-MP19.3	OM-3(1)R	×								YL	Type 3(1) R						7030080									
	N-MP19.5	W1-7	×				×				YL	Two Direction Large Arrow	48	24	8	RWM		6080005	2	2S	23						
	N-MP19.7	W14-3AZ	×						12	7	YL	NO PASSING ZONE	48	36	6	RWM		6080005	2	2 1/2S	25	2					
	N-MP19.8	W1-2R	×				×		12	7	YL	Right Curve Symbol	30	30	6	RWM		6080005	1	2 1/2S	11						
	N-MP20	D10-2AZ	×				×		12		GR	MILE 20						7030095									
	+	D10-2AZ	×								GR	MILE 20						7030095									Mount Sign Panel Back to Back
	N-MP20.2	OM-3(1)R	×								YL	Type 3(1) R						7030080									
	N-MP20.3A	OM-3(1)R	×				×				YL	Type 3(1) R						7030080									
	N-MP20.3B	OM-3(1)L	×				×				YL	Type 3(1) L						7030080									
	N-MP20.5	OM-3(1)R	×								YL	Type 3(1) R						7030080									
	N-MP20.6	OM-3(1)R	×								YL	Type 3(1) R						7030080									
	N-MP20.7	OM-3(1)R	×								YL	Type 3(1) R						7030080									

F.H.W.A. REGION	STATE	PROJECT NO.	SHEET NO.	TOTAL SHEETS	RECORD DRAWINGS
9	ARIZ.	ITO-0(208)T	19	65	

0000 PM ITO

Notes:
1. The Contractor shall verify post lengths and elevations.
2. The Engineer may shift a sign in order to achieve a more desirable location.
3. Quantities are approximate and for the Contractor's information only.
4. Offsets are measured from white edge line to edge of sign panel closest to roadway. Where there is no white edge line, measurement shall be taken from face of curb.

Panel Types:
- RWM: Regulatory, Warning, or Marker
- F-DA: Flat-sheet aluminum with direct applied characters
- FYP: Fluorescent Yellow Prismatic
- EXT: Extruded Aluminum

Stringer Types:
- P: Perforated square-tube post
- T: T-section support

Structure Types:
- TT: Tapered tube, single beam

Post Types:
- 2S: 2" Single Perforated
- 2 1/2S: 2 1/2" Single Perforated
- 2 1/2T: 2 1/2" Telescoping

	NAME	DATE
DESIGN	AE	06-16
DRAWN	AE	06-16
CHECKED	KEB	06-16

TRANSPORTATION
AECOM TECHNICAL SERVICES, Inc.
7720 North 16th Street, Suite 100
Phoenix, Arizona 85020
T 602.371.1100
AECOM
www.aecom.com

ARIZONA DEPARTMENT OF TRANSPORTATION
INFRASTRUCTURE DELIVERY AND OPERATIONS DIVISION
TRAFFIC DESIGN SERVICES

SIGN SUMMARY
NB-IRR 1

Registered Professional Engineer
C. E.
45815
KATE E. BONDY
Date Signed 6/15/2016
ARIZONA, U.S.A.
Expires 3/31/2018

LOCATION
TOHONO O'ODHAM NATION VARIOUS LOCATIONS

DWG NO. T-3.06

TRACS NO. SH643 01C | | ITO-0(208)T | ____ OF ____

6/16/2016 P:\60306196\900-Work\910-CAD\006_Civil\Sheets\NB-IR1_signsummary_06.dgn

DATE | MADE BY | NO.2 DESCRIPTION OF REVISION | DATE | MADE BY | NO.1 DESCRIPTION OF REVISION

F.H.W.A. REGION	STATE	PROJECT NO.	SHEET NO.	TOTAL SHEETS	RECORD DRAWINGS
9	ARIZ.	IT0-0(208)T	20	65	

0000 PM IT0

Plan Sheet No.	Sign Number	MOAS Sign Code	Work						Offset (ft)	Mounting Height	Background Color	Panel							Ground Mounted			Stringer			Overhead		Remarks
			New	Existing															Foundations	Post		New Slipbases					
				Replace Panel	Relocate Panel	Modify Legend	Remove	To Remain				Legend	Width (in)	Height (in)	Area (sq ft)	Type	Sheeting Type	Bid Item Number		Type	Total Length (ft)		Type	Total Length (ft)	Structure Type	No. of Lights	
	N-MP20.8A	OM-3(1)R	×								YL	Type 3(1) R						7030080									
	N-MP20.8B	R2-1	×				×		12	7	WH	SPEED LIMIT 55	24	30	5	RWM		6080005	1	2 1/2S	12						
	N-MP21	D10-2AZ	×				×		12		GR	MILE 21						7030095									
	+	D10-2AZ	×								GR	MILE 21						7030095									Mount Sign Panel Back to Back
	N-MP21.0	W14-3AZ	×						12	7	YL	NO PASSING ZONE	48	36	6	RWM		6080005	2	2 1/2S	25	2					
	N-MP21.1	OM-3(1)R	×								YL	Type 3(1) R						7030080									
	N-MP21.2	OM-3(1)R	×								YL	Type 3(1) R						7030080									
	N-MP21.3	OM-3(1)R	×								YL	Type 3(1) R						7030080									
	N-MP21.4	OM-3(1)R	×								YL	Type 3(1) R						7030080									
	N-MP21.5A	OM-3(1)R	×								YL	Type 3(1) R						7030080									
	N-MP21.5B	OM-3(1)R	×								YL	Type 3(1) R						7030080									
	N-MP21.6	OM-3(1)R	×								YL	Type 3(1) R						7030080									
	N-MP21.7	OM-3(1)R	×								YL	Type 3(1) R						7030080									
	N-MP21.8	OM-3(1)R	×								YL	Type 3(1) R						7030080									
	N-MP21.9A	OM-3(1)R	×				×				YL	Type 3(1) R						7030080									
	N-MP21.9B	OM-3(1)L	×				×				YL	Type 3(1) L						7030080									
	N-MP22	D10-2AZ	×				×		12		GR	MILE 22						7030095									
	+	D10-2AZ	×								GR	MILE 22						7030095									Mount Sign Panel Back to Back
	N-MP22.0	OM-3(1)R	×								YL	Type 3(1) R						7030080									
	N-MP22.1	OM-3(1)R	×								YL	Type 3(1) R						7030080									
	N-MP22.2A	W14-3AZ	×						12	7	YL	NO PASSING ZONE	48	36	6	RWM		6080005	2	2 1/2S	25	2					
	N-MP22.2B	OM-3(1)R	×								YL	Type 3(1) R						7030080									
	N-MP22.3A	OM-3(1)R	×								YL	Type 3(1) R						7030080									
	N-MP22.3B	OM-3(1)R	×								YL	Type 3(1) R						7030080									
	N-MP22.4	OM-3(1)R	×								YL	Type 3(1) R						7030080									
	N-MP22.5A	OM-3(1)R	×								YL	Type 3(1) R						7030080									
	N-MP22.5B	W14-3AZ	×						12	7	YL	NO PASSING ZONE	48	36	6	RWM		6080005	2	2 1/2S	25	2					
	N-MP22.7	OM-3(1)R	×								YL	Type 3(1) R						7030080									
	N-MP22.8A	OM-3(1)R	×								YL	Type 3(1) R						7030080									
	N-MP22.8B	OM-3(1)R	×								YL	Type 3(1) R						7030080									

Notes:
1. The Contractor shall verify post lengths and elevations.
2. The Engineer may shift a sign in order to achieve a more desirable location.
3. Quantities are approximate and for the Contractor's information only.
4. Offsets are measured from white edge line to edge of sign panel closest to roadway. Where there is no white edge line, measurement shall be taken from face of curb.

Panel Types:
- RWM: Regulatory, Warning, or Marker
- F-DA: Flat-sheet aluminum with direct applied characters
- FYP: Fluorescent Yellow Prismatic
- EXT: Extruded Aluminum

Stringer Types:
- P: Perforated square-tube post
- T: T-section support

Structure Types:
- TT: Tapered tube, single beam

Post Types:
- 2S: 2" Single Perforated
- 2 1/2S: 2 1/2" Single Perforated
- 2 1/2T: 2 1/2" Telescoping

	NAME	DATE
DESIGN	AE	06-16
DRAWN	AE	06-16
CHECKED	KEB	06-16

TRANSPORTATION
AECOM TECHNICAL SERVICES, Inc.
7720 North 16th Street, Suite 100
Phoenix, Arizona 85020
T 602.371.1100
AECOM
www.aecom.com

ARIZONA DEPARTMENT OF TRANSPORTATION
INFRASTRUCTURE DELIVERY AND OPERATIONS DIVISION
TRAFFIC DESIGN SERVICES

SIGN SUMMARY
NB-IRR 1

Registered Professional Engineer
C. E.
45815
KATE E. BONDY
Date Signed 6/15/2016
ARIZONA, U.S.A.
Expires 3/31/2018

LOCATION
TOHONO O'ODHAM NATION VARIOUS LOCATIONS

DWG NO. T-3.07

TRACS NO. SH643 01C | | IT0-0(208)T | ____ OF ____

6/16/2016 P:\60306196\900-Work\910-CAD\006_Civil\Sheets\NB-IR1_signsummary_07.dgn

NO.1 DESCRIPTION OF REVISION | DATE | MADE BY
NO.2 DESCRIPTION OF REVISION | DATE | MADE BY

Plan Sheet No.	Sign Number	MOAS Sign Code	Work						Offset (ft)	Mounting Height	Background Color	Panel							Ground Mounted			Stringer			Overhead		Remarks
				Existing																Post								
			New	Replace Panel	Relocate Panel	Modify Legend	Remove	To Remain				Legend	Width (in)	Height (in)	Area (sq ft)	Type	Sheeting Type	Bid Item Number	Foundations	Type	Total Length (ft)	New Slipbases	Type	Total Length (ft)	Structure Type	No. of Lights	
	N-MP23	D10-2AZ	×				×		12		GR	MILE 23						7030095									
	+	D10-2AZ	×								GR	MILE 23						7030095									Mount Sign Panel Back to Back
	N-MP23.0	OM-3(1)R	×								YL	Type 3(1) R						7030080									
	N-MP23.1	OM-3(1)R	×								YL	Type 3(1) R						7030080									
	N-MP23.4A	OM-3(1)R	×				×				YL	Type 3(1) R						7030080									
	N-MP23.4B	OM-3(1)L	×				×				YL	Type 3(1) L						7030080									
	N-MP23.5	W11-4	×				×		12	7	YL	Cattle Crossing Symbol	30	30	6	RWM		6080005	1	2 1/2S	11						
	N-MP23.7A	OM-3(1)R	×								YL	Type 3(1) R						7030080									
	N-MP23.7B	OM-3(1)R	×								YL	Type 3(1) R						7030080									
	N-MP23.8	OM-3(1)R	×								YL	Type 3(1) R						7030080									
	N-MP23.9A	OM-3(1)R	×								YL	Type 3(1) R						7030080									
	N-MP23.9B	W1-2L	×						12	7	YL	Left Curve Symbol	30	30	6	RWM		6080005	1	2 1/2S	11						
	N-MP24	D10-2AZ	×				×		12		GR	MILE 24						7030095									
	+	D10-2AZ	×								GR	MILE 24						7030095									Mount Sign Panel Back to Back
	N-MP24.0	W14-3AZ	×						12	7	YL	NO PASSING ZONE	48	36	6	RWM		6080005	2	2 1/2S	25	2					
	N-MP24.5	OM-3(1)R	×								YL	Type 3(1) R						7030080									
	N-MP24.6	W14-3AZ	×						12	7	YL	NO PASSING ZONE	48	36	6	RWM		6080005	2	2 1/2S	25	2					
	N-MP24.9A	OM-3(1)R	×								YL	Type 3(1) R						7030080									
	N-MP24.9B	OM-3(1)R	×								YL	Type 3(1) R						7030080									
	N-MP25	D10-2AZ	×				×		12		GR	MILE 25						7030095									
	+	D10-2AZ	×								GR	MILE 25						7030095									Mount Sign Panel Back to Back
	N-MP25.0A	OM-3(1)R	×				×				YL	Type 3(1) R						7030080									
	N-MP25.0B	OM-3(1)L	×				×				YL	Type 3(1) L						7030080									
	N-MP25.5A	W14-3AZ	×						12	7	YL	NO PASSING ZONE	48	36	6	RWM		6080005	2	2 1/2S	25	2					
	N-MP25.5B	OM-3(1)R	×								YL	Type 3(1) R						7030080									
	N-MP25.6	OM-3(1)R	×								YL	Type 3(1) R						7030080									

F.H.W.A. REGION	STATE	PROJECT NO.	SHEET NO.	TOTAL SHEETS	RECORD DRAWINGS
9	ARIZ.	ITO-0(208)T	21	65	

0000 PM ITO

Notes:
1. The Contractor shall verify post lengths and elevations.
2. The Engineer may shift a sign in order to achieve a more desirable location.
3. Quantities are approximate and for the Contractor's information only.
4. Offsets are measured from white edge line to edge of sign panel closest to roadway. Where there is no white edge line, measurement shall be taken from face of curb.

Panel Types:
- RWM: Regulatory, Warning, or Marker
- F-DA: Flat-sheet aluminum with direct applied characters
- FYP: Fluorescent Yellow Prismatic
- EXT: Extruded Aluminum

Stringer Types:
- P: Perforated square-tube post
- T: T-section support

Structure Types:
- TT: Tapered tube, single beam

Post Types:
- 2S: 2" Single Perforated
- 2 1/2S: 2 1/2" Single Perforated
- 2 1/2T: 2 1/2" Telescoping

	NAME	DATE
DESIGN	AE	06-16
DRAWN	AE	06-16
CHECKED	KEB	06-16

TRANSPORTATION
AECOM TECHNICAL SERVICES, Inc.
7720 North 16th Street, Suite 100
Phoenix, Arizona 85020
T 602.371.1100
AECOM
www.aecom.com

ARIZONA DEPARTMENT OF TRANSPORTATION
INFRASTRUCTURE DELIVERY AND OPERATIONS DIVISION
TRAFFIC DESIGN SERVICES

SIGN SUMMARY
NB-IRR 1

Registered Professional Engineer
C. E.
45815
KATE E. BONDY
Date Signed 6/15/2016
ARIZONA, U.S.A.
Expires 3/31/2018

LOCATION
TOHONO O'ODHAM NATION VARIOUS LOCATIONS

DWG NO. T-3.08

TRACS NO. SH643 01C | | ITO-0(208)T | ____ OF ____

6/16/2016 P:\60306196\900-Work\910-CAD\006_Civil\Sheets\NB-IR1_signsummary_08.dgn

NO.1 DESCRIPTION OF REVISION | DATE | MADE BY
NO.2 DESCRIPTION OF REVISION | DATE | MADE BY

Plan Sheet No.	Sign Number	MOAS Sign Code	Work						Offset (ft)	Mounting Height	Background Color	Panel							Ground Mounted			Stringer		Overhead		Remarks
			New	Existing								Legend	Width (in)	Height (in)	Area (sq ft)	Type	Sheeting Type	Bid Item Number	Foundations	Post Type	Post Total Length (ft)	New Slipbases	Type	Total Length (ft)	Structure Type	No. of Lights	
				Replace Panel	Relocate Panel	Modify Legend	Remove	To Remain																		
	N-MP25.7	OM-3(1)R	×								YL	Type 3(1) R						7030080									
	N-MP26	D10-2AZ	×				×		12		GR	MILE 26						7030095									
	+	D10-2AZ	×								GR	MILE 26						7030095									Mount Sign Panel Back to Back
	N-MP26.0	W14-3AZ	×						12	7	YL	NO PASSING ZONE	48	36	6	RWM		6080005	2	2 1/2S	25	2					
	N-MP26.1	OM-3(1)R	×								YL	Type 3(1) R						7030080									
	N-MP27	D10-2AZ	×				×		12		GR	MILE 27						7030095									
	+	D10-2AZ	×								GR	MILE 27						7030095									Mount Sign Panel Back to Back
	N-MP27.3	W14-3AZ	×						12	7	YL	NO PASSING ZONE	48	36	6	RWM		6080005	2	2 1/2S	25	2					
	N-MP27.7A	OM-3(1)R	×				×				YL	Type 3(1) R						7030080									
	N-MP27.7B	OM-3(1)L	×				×				YL	Type 3(1) L						7030080									
	N-MP27.8	OM-3(1)R	×								YL	Type 3(1) R						7030080									
	N-MP28	D10-2AZ	×				×		12		GR	MILE 28						7030095									
	+	D10-2AZ	×								GR	MILE 28						7030095									Mount Sign Panel Back to Back
	N-MP28.0	OM-3(1)R	×								YL	Type 3(1) R						7030080									
	N-MP28.1	OM-3(1)R	×								YL	Type 3(1) R						7030080									
	N-MP28.2	OM-3(1)R	×								YL	Type 3(1) R						7030080									
	N-MP28.5	OM-3(1)R	×								YL	Type 3(1) R						7030080									
	N-MP28.8	OM-3(1)R	×								YL	Type 3(1) R						7030080									
	N-MP28.9A	OM-3(1)R	×								YL	Type 3(1) R						7030080									
	N-MP28.9B	OM-3(1)L	×								YL	Type 3(1) L						7030080									
	N-MP29	D10-2AZ	×				×		12		GR	MILE 29						7030095									
	+	D10-2AZ	×								GR	MILE 29						7030095									Mount Sign Panel Back to Back
	N-MP29.2	OM-3(1)R	×								YL	Type 3(1) R						7030080									
	N-MP29.5	W3-1	×				×		12	7	YL	Stop Ahead Symbol	30	30	6	RWM		6080005	1	2 1/2S	11						

F.H.W.A. REGION	STATE	PROJECT NO.	SHEET NO.	TOTAL SHEETS	RECORD DRAWINGS
9	ARIZ.	ITO-0(208)T	22	65	

0000 PM ITO

Notes:
1. The Contractor shall verify post lengths and elevations.
2. The Engineer may shift a sign in order to achieve a more desirable location.
3. Quantities are approximate and for the Contractor's information only.
4. Offsets are measured from white edge line to edge of sign panel closest to roadway. Where there is no white edge line, measurement shall be taken from face of curb.

Panel Types:
- RWM: Regulatory, Warning, or Marker
- F-DA: Flat-sheet aluminum with direct applied characters
- FYP: Fluorescent Yellow Prismatic
- EXT: Extruded Aluminum

Stringer Types:
- P: Perforated square-tube post
- T: T-section support

Structure Types:
- TT: Tapered tube, single beam

Post Types:
- 2S: 2" Single Perforated
- 2 1/2S: 2 1/2" Single Perforated
- 2 1/2T: 2 1/2" Telescoping

	NAME	DATE
DESIGN	AE	06-16
DRAWN	AE	06-16
CHECKED	KEB	06-16

TRANSPORTATION
AECOM TECHNICAL SERVICES, Inc.
7720 North 16th Street, Suite 100
Phoenix, Arizona 85020
T 602.371.1100
AECOM
www.aecom.com

ARIZONA DEPARTMENT OF TRANSPORTATION
INFRASTRUCTURE DELIVERY AND OPERATIONS DIVISION
TRAFFIC DESIGN SERVICES

SIGN SUMMARY
NB-IRR 1

Registered Professional Engineer
C. E.
45815
KATE E. BONDY
Date Signed 6/15/2016
ARIZONA, U.S.A.
Expires 3/31/2018

LOCATION
TOHONO O'ODHAM NATION VARIOUS LOCATIONS

DWG NO. T-3.09

TRACS NO. SH643 01C | | ITO-0(208)T | ____ OF ____

6/16/2016 P:¢60306196¢900-Work¢910-CAD¢006_Civil¢Sheets¢NB-IR1_signsummary_09.dgn

NO.1 DESCRIPTION OF REVISION | MADE BY | DATE
NO.2 DESCRIPTION OF REVISION | MADE BY | DATE

F.H.W.A. REGION	STATE	PROJECT NO.	SHEET NO.	TOTAL SHEETS	RECORD DRAWINGS
9	ARIZ.	IT0-0(208)T	23	65	

0000 PM IT0

Plan Sheet No.	Sign Number	MOAS Sign Code	Work						Offset (ft)	Mounting Height	Background Color	Panel							Ground Mounted			Stringer			Overhead		Remarks
			New	Existing								Legend	Width (in)	Height (in)	Area (sq ft)	Type	Sheeting Type	Bid Item Number	Foundations	Post		New Slipbases	Type	Total Length (ft)	Structure Type	No. of Lights	
				Replace Panel	Relocate Panel	Modify Legend	Remove	To Remain												Type	Total Length (ft)						
	S-MP29.5	M1-10a	×				×		12	7	BL	INDIAN 1	24	24	4	RWM		6080005	1	2S	11						
	S-MP29.2	OM-3(1)R	×								YL	Type 3(1) R						7030080									
	S-MP28.9A	OM-3(1)R	×								YL	Type 3(1) R						7030080									
	S-MP28.9B	OM-3(1)L	×								YL	Type 3(1) L						7030080									
	S-MP28.8A	OM-3(1)R	×								YL	Type 3(1) R						7030080									
	S-MP28.8B	R2-1	×				×		12	7	WH	SPEED LIMIT 55	24	30	5	RWM		6080005	1	2 1/2S	12						
	S-MP28.5	OM-3(1)R	×								YL	Type 3(1) R						7030080									
	S-MP28.2	OM-3(1)R	×								YL	Type 3(1) R						7030080									
	S-MP28.1	OM-3(1)R	×								YL	Type 3(1) R						7030080									
	S-MP28.0	OM-3(1)R	×								YL	Type 3(1) R						7030080									
	S-MP27.8	OM-3(1)R	×								YL	Type 3(1) R						7030080									
	S-MP27.7A	OM-3(1)R	×								YL	Type 3(1) R						7030080									
	S-MP27.7B	OM-3(1)L	×								YL	Type 3(1) L						7030080									
	S-MP27.2	W14-3AZ	×						12	7	YL	NO PASSING ZONE	48	36	6	RWM		6080005	2	2 1/2S	25	2					
	S-MP26.3	W11-31AZ					×				YL	TURTLE CROSSING															
	+	SPECIAL					×				YL	WATCH FOR TORTOISES															
	S-MP26.1	OM-3(1)R	×								YL	Type 3(1) R						7030080									
	S-MP26.2	W14-3AZ	×						12	7	YL	NO PASSING ZONE	48	36	6	RWM		6080005	2	2 1/2S	25	2					
	S-MP25.7	OM-3(1)R	×								YL	Type 3(1) R						7030080									
	S-MP25.6	OM-3(1)R	×								YL	Type 3(1) R						7030080									
	S-MP25.5A	OM-3(1)R	×								YL	Type 3(1) R						7030080									
	S-MP25.5B	W14-3AZ	×						12	7	YL	NO PASSING ZONE	48	36	6	RWM		6080005	2	2 1/2S	25	2					
	S-MP25.0A	OM-3(1)R	×								YL	Type 3(1) R						7030080									
	S-MP25.0B	OM-3(1)L	×								YL	Type 3(1) L						7030080									
	S-MP25.0C	W14-3AZ	×						12	7	YL	NO PASSING ZONE	48	36	6	RWM		6080005	2	2 1/2S	25	2					

Notes:
1. The Contractor shall verify post lengths and elevations.
2. The Engineer may shift a sign in order to achieve a more desirable location.
3. Quantities are approximate and for the Contractor's information only.
4. Offsets are measured from white edge line to edge of sign panel closest to roadway. Where there is no white edge line, measurement shall be taken from face of curb.

Panel Types:
RWM: Regulatory, Warning, or Marker
F-DA: Flat-sheet aluminum with direct applied characters
FYP: Fluorescent Yellow Prismatic
EXT: Extruded Aluminum

Stringer Types:
P: Perforated square-tube post
T: T-section support

Structure Types:
TT: Tapered tube, single beam

Post Types:
2S: 2" Single Perforated
2 1/2S: 2 1/2" Single Perforated
2 1/2T: 2 1/2" Telescoping

	NAME	DATE
DESIGN	AE	06-16
DRAWN	AE	06-16
CHECKED	KEB	06-16

TRANSPORTATION
AECOM TECHNICAL SERVICES, Inc.
7720 North 16th Street, Suite 100
Phoenix, Arizona 85020
T 602.371.1100
AECOM
www.aecom.com

ARIZONA DEPARTMENT OF TRANSPORTATION
INFRASTRUCTURE DELIVERY AND OPERATIONS DIVISION
TRAFFIC DESIGN SERVICES

SIGN SUMMARY
SB-IRR 1

Registered Professional Engineer
C. E.
45815
KATE E. BONDY
Date Signed 6/15/2016
ARIZONA, U.S.A.
Expires 3/31/2018

LOCATION
TOHONO O'ODHAM NATION VARIOUS LOCATIONS

DWG NO. T-3.10

TRACS NO. SH643 01C | | ITO-0(208)T | ____ OF ____

6/16/2016 P:\60306196\900-Work\910-CAD\006_Civil\Sheets\SB-IR1_signsummary_01.dgn

DATE | MADE BY | DESCRIPTION OF REVISION
NO.2
NO.1

Plan Sheet No.	Sign Number	MOAS Sign Code	Work						Offset (ft)	Mounting Height	Background Color	Panel							Ground Mounted			Stringer		Overhead		Remarks
			New	Existing								Legend	Width (in)	Height (in)	Area (sq ft)	Type	Sheeting Type	Bid Item Number	Foundations	Post Type	Post Total Length (ft)	New Slipbases	Type	Total Length (ft)	Structure Type	No. of Lights	
				Replace Panel	Relocate Panel	Modify Legend	Remove	To Remain																		
	S-MP24.9A	OM-3(1)R	×								YL	Type 3(1) R						7030080									
	S-MP24.9B	OM-3(1)R	×								YL	Type 3(1) R						7030080									
	S-MP24.6	W14-3AZ	×						12	7	YL	NO PASSING ZONE	48	36	6	RWM		6080005	2	2 1/2S	25	2					
	S-MP24.5	OM-3(1)R	×								YL	Type 3(1) R						7030080									
	S-MP24.3	W14-3AZ	×						12	7	YL	NO PASSING ZONE	48	36	6	RWM		6080005	2	2 1/2S	25	2					
	S-MP24.2	W1-2R	×				×		12	7	YL	Right Curve Symbol	30	30	6	RWM		6080005	1	2 1/2S	11						
	S-MP23.9	OM-3(1)R	×								YL	Type 3(1) R						7030080									
	S-MP23.8	OM-3(1)R	×								YL	Type 3(1) R						7030080									
	S-MP23.7A	OM-3(1)R	×								YL	Type 3(1) R						7030080									
	S-MP23.7B	OM-3(1)R	×								YL	Type 3(1) R						7030080									
	S-MP23.4A	OM-3(1)R	×				×				YL	Type 3(1) R						7030080									
	S-MP23.4B	OM-3(1)L	×				×				YL	Type 3(1) L						7030080									
	S-MP23.1	OM-3(1)R	×								YL	Type 3(1) R						7030080									
	S-MP23.0	OM-3(1)R	×								YL	Type 3(1) R						7030080									
	S-MP22.87	OM-3(1)R	×								YL	Type 3(1) R						7030080									
	S-MP22.83	OM-3(1)R	×								YL	Type 3(1) R						7030080									
	S-MP22.8	W14-3AZ	×						12	7	YL	NO PASSING ZONE	48	36	6	RWM		6080005	2	2 1/2S	25	2					
	S-MP22.7	OM-3(1)R	×								YL	Type 3(1) R						7030080									
	S-MP22.5	OM-3(1)R	×								YL	Type 3(1) R						7030080									
	S-MP22.4	OM-3(1)R	×								YL	Type 3(1) R						7030080									
	S-MP22.32	OM-3(1)R	×								YL	Type 3(1) R						7030080									
	S-MP22.35	OM-3(1)R	×								YL	Type 3(1) R						7030080									
	S-MP22.3	W14-3AZ	×						12	7	YL	NO PASSING ZONE	48	36	6	RWM		6080005	2	2 1/2S	25	2					
	S-MP22.2	OM-3(1)R	×								YL	Type 3(1) R						7030080									
	S-MP22.1	OM-3(1)R	×								YL	Type 3(1) R						7030080									
	S-MP22.0	OM-3(1)R	×								YL	Type 3(1) R						7030080									
	S-MP21.9A	OM-3(1)R	×					×			YL	Type 3(1) R						7030080									
	S-MP21.9B	OM-3(1)L	×					×			YL	Type 3(1) L						7030080									

F.H.W.A. REGION	STATE	PROJECT NO.	SHEET NO.	TOTAL SHEETS	RECORD DRAWINGS
9	ARIZ.	ITO-0(208)T	24	65	

0000 PM ITO

Notes:
1. The Contractor shall verify post lengths and elevations.
2. The Engineer may shift a sign in order to achieve a more desirable location.
3. Quantities are approximate and for the Contractor's information only.
4. Offsets are measured from white edge line to edge of sign panel closest to roadway. Where there is no white edge line, measurement shall be taken from face of curb.

Panel Types:
- RWM: Regulatory, Warning, or Marker
- F-DA: Flat-sheet aluminum with direct applied characters
- FYP: Fluorescent Yellow Prismatic
- EXT: Extruded Aluminum

Stringer Types:
- P: Perforated square-tube post
- T: T-section support

Structure Types:
- TT: Tapered tube, single beam

Post Types:
- 2S: 2" Single Perforated
- 2 1/2S: 2 1/2" Single Perforated
- 2 1/2T: 2 1/2" Telescoping

	NAME	DATE
DESIGN	AE	06-16
DRAWN	AE	06-16
CHECKED	KEB	06-16

TRANSPORTATION
AECOM TECHNICAL SERVICES, Inc.
7720 North 16th Street, Suite 100
Phoenix, Arizona 85020
T 602.371.1100
AECOM
www.aecom.com

ARIZONA DEPARTMENT OF TRANSPORTATION
INFRASTRUCTURE DELIVERY AND OPERATIONS DIVISION
TRAFFIC DESIGN SERVICES

SIGN SUMMARY
SB-IRR 1

Registered Professional Engineer
C. E.
45815
KATE E. BONDY
Date Signed 6/15/2016
ARIZONA, U.S.A.
Expires 3/31/2018

LOCATION
TOHONO O'ODHAM NATION VARIOUS LOCATIONS

DWG NO. T-3.11

TRACS NO. SH643 01C | ITO-0(208)T | ____ OF ____

6/16/2016 P:\60306196\900-Work\910-CAD\006_Civil\Sheets\SB-IR1_signsummary_02.dgn

NO.1 NO.2 DESCRIPTION OF REVISION | MADE BY | DATE

Plan Sheet No.	Sign Number	MOAS Sign Code	Work						Offset (ft)	Mounting Height	Background Color	Panel							Ground Mounted			Stringer		Overhead		Remarks
			New	Existing								Legend	Width (in)	Height (in)	Area (sq ft)	Type	Sheeting Type	Bid Item Number	Foundations	Post Type	Post Total Length (ft)	New Slipbases	Type	Total Length (ft)	Structure Type	No. of Lights	
				Replace Panel	Relocate Panel	Modify Legend	Remove	To Remain																			
	S-MP21.8	OM-3(1)R	×								YL	Type 3(1) R						7030080									
	S-MP21.7	OM-3(1)R	×								YL	Type 3(1) R						7030080									
	S-MP21.6	OM-3(1)R	×								YL	Type 3(1) R						7030080									
	S-MP21.5A	OM-3(1)R	×								YL	Type 3(1) R						7030080									
	S-MP21.5B	OM-3(1)R	×								YL	Type 3(1) R						7030080									
	S-MP21.4A	W14-3AZ	×						12	7	YL	NO PASSING ZONE	48	36	6	RWM		6080005	2	2 1/2S	25	2					
	S-MP21.4B	OM-3(1)R	×								YL	Type 3(1) R						7030080									
	S-MP21.3	OM-3(1)R	×								YL	Type 3(1) R						7030080									
	S-MP21.2	OM-3(1)R	×								YL	Type 3(1) R						7030080									
	S-MP21.1	OM-3(1)R	×								YL	Type 3(1) R						7030080									
	S-MP20.8A	R2-1	×				×		12	7	WH	SPEED LIMIT 55	24	30	5	RWM		6080005	1	2 1/2S	12						
	S-MP20.8B	OM-3(1)R	×								YL	Type 3(1) R						7030080									
	S-MP20.7	OM-3(1)R	×								YL	Type 3(1) R						7030080									
	S-MP20.6	OM-3(1)R	×								YL	Type 3(1) R						7030080									
	S-MP20.5A	W14-3AZ	×						12	7	YL	NO PASSING ZONE	48	36	6	RWM		6080005	2	2 1/2S	25	2					
	S-MP20.5B	OM-3(1)R	×								YL	Type 3(1) R						7030080									
	S-MP20.4A	W1-2L	×				×		12	7	YL	Left Curve Symbol	30	30	6	RWM		6080005	1	2 1/2S	11						
	S-MP20.4B	OM-3(1)R	×								YL	Type 3(1) R						7030080									
	S-MP20.35	OM-3(1)R	×								YL	Type 3(1) R						7030080									
	S-MP20.3A	OM-3(1)R	×				×				YL	Type 3(1) R						7030080									
	S-MP20.3B	OM-3(1)L	×				×				YL	Type 3(1) L						7030080									
	S-MP20.2	OM-3(1)R	×								YL	Type 3(1) R						7030080									
	S-MP19.6	W3-5aAZ	×				×		12	7	YL	SPEED REDUCED AHEAD	36	36	9	RWM		6080005	2	2 1/2S	27	2					
	S-MP19.3A	R2-1	×				×		12	7	WH	SPEED LIMIT 35	24	30	5	RWM		6080005	1	2 1/2S	12						
	S-MP19.3B	OM-3(1)R	×								YL	Type 3(1) R						7030080									
	S-MP19.3	W14-3AZ	×						12	7	YL	NO PASSING ZONE	48	36	6	RWM		6080005	2	2 1/2S	25	2					

F.H.W.A. REGION	STATE	PROJECT NO.	SHEET NO.	TOTAL SHEETS	RECORD DRAWINGS
9	ARIZ.	ITO-0(208)T	25	65	

0000 PM ITO

Notes:
1. The Contractor shall verify post lengths and elevations.
2. The Engineer may shift a sign in order to achieve a more desirable location.
3. Quantities are approximate and for the Contractor's information only.
4. Offsets are measured from white edge line to edge of sign panel closest to roadway. Where there is no white edge line, measurement shall be taken from face of curb.

Panel Types:
- RWM: Regulatory, Warning, or Marker
- F-DA: Flat-sheet aluminum with direct applied characters
- FYP: Fluorescent Yellow Prismatic
- EXT: Extruded Aluminum

Stringer Types:
- P: Perforated square-tube post
- T: T-section support

Structure Types:
- TT: Tapered tube, single beam

Post Types:
- 2S: 2" Single Perforated
- 2 1/2S: 2 1/2" Single Perforated
- 2 1/2T: 2 1/2" Telescoping

	NAME	DATE
DESIGN	AE	06-16
DRAWN	AE	06-16
CHECKED	KEB	06-16

TRANSPORTATION
AECOM TECHNICAL SERVICES, Inc.
7720 North 16th Street, Suite 100
Phoenix, Arizona 85020
T 602.371.1100
AECOM
www.aecom.com

ARIZONA DEPARTMENT OF TRANSPORTATION
INFRASTRUCTURE DELIVERY AND OPERATIONS DIVISION
TRAFFIC DESIGN SERVICES

SIGN SUMMARY
SB-IRR 1

Registered Professional Engineer
C. E.
45815
KATE E. BONDY
Date Signed 6/15/2016
ARIZONA, U.S.A.
Expires 3/31/2018

LOCATION
TOHONO O'ODHAM NATION VARIOUS LOCATIONS

DWG NO. T-3.12

TRACS NO. SH643 01C | ITO-0(208)T | ____ OF ____

6/16/2016 P:\60306196\900-Work\910-CAD\006_Civil\Sheets\SB-IR1_signsummary_03.dgn

NO.2 DESCRIPTION OF REVISION | DATE | MADE BY
NO.1 DESCRIPTION OF REVISION | DATE | MADE BY

Plan Sheet No.	Sign Number	MOAS Sign Code	Work: New	Work: Existing: Replace Panel	Work: Existing: Relocate Panel	Work: Existing: Modify Legend	Work: Existing: Remove	Work: Existing: To Remain	Offset (ft)	Mounting Height	Background Color	Panel: Legend	Panel: Width (in)	Panel: Height (in)	Panel: Area (sq ft)	Panel: Type	Panel: Sheeting Type	Panel: Bid Item Number	Ground Mounted: Foundations	Ground Mounted: Post: Type	Ground Mounted: Post: Total Length (ft)	Stringer: New Slipbases	Stringer: Type	Stringer: Total Length (ft)	Overhead: Structure Type	Overhead: No. of Lights	Remarks
	S-MP19.2	W3-1	×				×		12	7	YL	Stop Ahead Symbol	30	30	6	RWM		6080005	1	2 1/2S	11						
	S-MP19.1A	R1-1	×				×		12	7	RD	STOP	30	30	6	RWM		6080005	1	2 1/2S	12						Intersection with Indian Route 28
	S-MP19.1B	R1-1	×				×		12	7	RD	STOP	30	30	6	RWM		6080005	1	2 1/2S	12						Intersection with Indian Route 28
	S-MP19.0A	OM-3(1)R	×				×				YL	Type 3(1) R						7030080									
	S-MP19.0B	OM-3(1)L	×				×				YL	Type 3(1) L						7030080									
	S-MP18.9	R1-1	×				×		12	7	RD	STOP	30	30	6	RWM		6080005	1	2 1/2S	12						Side Road
	S-MP18.8	R1-1	×				×		12	7	RD	STOP	30	30	6	RWM		6080005	1	2 1/2S	12						Side Road
	S-MP17.7	R2-1	×				×		12	7	WH	SPEED LIMIT 55	24	30	5	RWM		6080005	1	2 1/2S	12						
	S-MP17.6	W14-3AZ	×						12	7	YL	NO PASSING ZONE	48	36	6	RWM		6080005	2	2 1/2S	25	2					
	S-MP17.4	OM-3(1)R	×								YL	Type 3(1) R						7030080									
	S-MP17.3	OM-3(1)R	×								YL	Type 3(1) R						7030080									
	S-MP17.2	OM-3(1)R	×								YL	Type 3(1) R						7030080									
	S-MP16.8	OM-3(1)R	×								YL	Type 3(1) R						7030080									
	S-MP16.8A	OM-3(1)R	×				×				YL	Type 3(1) R						7030080									
	S-MP16.8B	OM-3(1)L	×				×				YL	Type 3(1) L						7030080									
	S-MP16.7	W14-3AZ	×						12	7	YL	NO PASSING ZONE	48	36	6	RWM		6080005	2	2 1/2S	25	2					
	S-MP16.5	W1-2L	×				×		12	7	YL	Left Curve Symbol	30	30	6	RWM		6080005	1	2 1/2S	11						
	S-MP16.3	OM-3(1)R	×								YL	Type 3(1) R						7030080									
	S-MP16.2	OM-3(1)R	×								YL	Type 3(1) R						7030080									
	S-MP15.8	OM-3(1)R	×								YL	Type 3(1) R						7030080									
	S-MP15.7	OM-3(1)R	×								YL	Type 3(1) R						7030080									
	S-MP15.6	OM-3(1)R	×								YL	Type 3(1) R						7030080									
	S-MP15.5A	OM-3(1)R	×								YL	Type 3(1) R						7030080									
	S-MP15.5B	OM-3(1)L	×								YL	Type 3(1) L						7030080									
	S-MP15.1A	OM-3(1)R	×				×				YL	Type 3(1) R						7030080									
	S-MP15.1B	OM-3(1)L	×				×				YL	Type 3(1) L						7030080									

F.H.W.A. REGION	STATE	PROJECT NO.	SHEET NO.	TOTAL SHEETS	RECORD DRAWINGS
9	ARIZ.	ITO-0(208)T	26	65	

0000 PM ITO

Notes:
1. The Contractor shall verify post lengths and elevations.
2. The Engineer may shift a sign in order to achieve a more desirable location.
3. Quantities are approximate and for the Contractor's information only.
4. Offsets are measured from white edge line to edge of sign panel closest to roadway. Where there is no white edge line, measurement shall be taken from face of curb.

Panel Types:
- RWM: Regulatory, Warning, or Marker
- F-DA: Flat-sheet aluminum with direct applied characters
- FYP: Fluorescent Yellow Prismatic
- EXT: Extruded Aluminum

Stringer Types:
- P: Perforated square-tube post
- T: T-section support

Structure Types:
- TT: Tapered tube, single beam

Post Types:
- 2S: 2" Single Perforated
- 2 1/2S: 2 1/2" Single Perforated
- 2 1/2T: 2 1/2" Telescoping

	NAME	DATE
DESIGN	AE	06-16
DRAWN	AE	06-16
CHECKED	KEB	06-16

TRANSPORTATION
AECOM TECHNICAL SERVICES, Inc.
7720 North 16th Street, Suite 100
Phoenix, Arizona 85020
T 602.371.1100
AECOM
www.aecom.com

ARIZONA DEPARTMENT OF TRANSPORTATION
INFRASTRUCTURE DELIVERY AND OPERATIONS DIVISION
TRAFFIC DESIGN SERVICES

SIGN SUMMARY
SB-IRR 1

Registered Professional Engineer
C. E.
45815
KATE E. BONDY
Date Signed 6/15/2016
ARIZONA, U.S.A.
Expires 3/31/2018

LOCATION
TOHONO O'ODHAM NATION VARIOUS LOCATIONS

DWG NO. T-3.13

TRACS NO. SH643 01C | ITO-0(208)T | ____ OF ____

6/16/2016 P:\60306196\900-Work\910-CAD\006_Civil\Sheets\SB-IR1_signsummary_04.dgn

NO.1 DESCRIPTION OF REVISION | NO.2 DESCRIPTION OF REVISION | MADE BY | DATE

Plan Sheet No.	Sign Number	MOAS Sign Code	Work						Offset (ft)	Mounting Height	Background Color	Panel							Ground Mounted			Stringer		Overhead		Remarks
			New	Existing								Legend	Width (in)	Height (in)	Area (sq ft)	Type	Sheeting Type	Bid Item Number	Foundations	Post Type	Post Total Length (ft)	New Slipbases	Type	Total Length (ft)	Structure Type	No. of Lights	
				Replace Panel	Relocate Panel	Modify Legend	Remove	To Remain																		
	S-MP15.0	W14-3AZ	×						12	7	YL	NO PASSING ZONE	48	36	6	RWM		6080005	2	2 1/2S	25	2				
	S-MP14.9	OM-3(1)R	×								YL	Type 3(1) R						7030080								
	S-MP13.5A	W14-3AZ	×						12	7	YL	NO PASSING ZONE	48	36	6	RWM		6080005	2	2 1/2S	25	2				
	S-MP13.5B	OM-3(1)R	×								YL	Type 3(1) R						7030080								
	S-MP13.3A	OM-3(1)L	×								YL	Type 3(1) L						7030080								
	S-MP13.3B	OM-3(1)R	×				×				YL	Type 3(1) R						7030080								
	S-MP13.2	OM-3(1)R	×								YL	Type 3(1) R						7030080								
	S-MP13.1	OM-3(1)R	×								YL	Type 3(1) R						7030080								
	S-MP13.0	W14-3AZ	×						12	7	YL	NO PASSING ZONE	48	36	6	RWM		6080005	2	2 1/2S	25	2				
	S-MP12.7	W14-3AZ	×						12	7	YL	NO PASSING ZONE	48	36	6	RWM		6080005	2	2 1/2S	25	2				
	S-MP12.6	R2-1	×				×		12	7	WH	SPEED LIMIT 45	24	30	5	RWM		6080005	1	2 1/2S	12					
	S-MP12.5	OM-3(1)R	×								YL	Type 3(1) R						7030080								
	S-MP12.3A	W1-8L	×				×		12	5	YL	Left Chevron	24	30	5	RWM		6080005	1	2 1/2S	12					
	S-MP12.3B	W1-8L	×				×		12	5	YL	Left Chevron	24	30	5	RWM		6080005	1	2 1/2S	12					
	+	W1-8R	×				×			5	YL	Right Chevron	24	30	5	RWM		6080005								Mount Sign Panel Back to Back
	S-MP12.3C	W1-8L	×				×		12	5	YL	Left Chevron	24	30	5	RWM		6080005	1	2 1/2S	12					
	+	W1-8R	×				×			5	YL	Right Chevron	24	30	5	RWM		6080005								Mount Sign Panel Back to Back
	S-MP12.3D	W1-8L	×				×		12	5	YL	Left Chevron	24	30	5	RWM		6080005	1	2 1/2S	12					
	+	W1-8R	×				×			5	YL	Right Chevron	24	30	5	RWM		6080005								Mount Sign Panel Back to Back
	S-MP12.3E	W1-8L	×				×		12	5	YL	Left Chevron	24	30	5	RWM		6080005	1	2 1/2S	12					
	+	W1-8R	×				×			5	YL	Right Chevron	24	30	5	RWM		6080005								Mount Sign Panel Back to Back
	S-MP12.3F	W1-8R	×				×		12	5	YL	Right Chevron	24	30	5	RWM		6080005	1	2 1/2S	12					Faces NB Direction
	S-MP12.3A	OM-3(1)R	×								YL	Type 3(1) R						7030080								
	S-MP12.3B	OM-3(1)L	×								YL	Type 3(1) L						7030080								
	S-MP12.1	OM-3(1)R	×								YL	Type 3(1) R						7030080								
	S-MP11.9	W14-3AZ	×						12	7	YL	NO PASSING ZONE	48	36	6	RWM		6080005	2	2 1/2S	25	2				

F.H.W.A. REGION	STATE	PROJECT NO.	SHEET NO.	TOTAL SHEETS	RECORD DRAWINGS
9	ARIZ.	ITO-0(208)T	27	65	

0000 PM ITO

Notes:
1. The Contractor shall verify post lengths and elevations.
2. The Engineer may shift a sign in order to achieve a more desirable location.
3. Quantities are approximate and for the Contractor's information only.
4. Offsets are measured from white edge line to edge of sign panel closest to roadway. Where there is no white edge line, measurement shall be taken from face of curb.

Panel Types:
- RWM: Regulatory, Warning, or Marker
- F-DA: Flat-sheet aluminum with direct applied characters
- FYP: Fluorescent Yellow Prismatic
- EXT: Extruded Aluminum

Stringer Types:
- P: Perforated square-tube post
- T: T-section support

Structure Types:
- TT: Tapered tube, single beam

Post Types:
- 2S: 2" Single Perforated
- 2 1/2S: 2 1/2" Single Perforated
- 2 1/2T: 2 1/2" Telescoping

	NAME	DATE
DESIGN	AE	06-16
DRAWN	AE	06-16
CHECKED	KEB	06-16

TRANSPORTATION
AECOM TECHNICAL SERVICES, Inc.
7720 North 16th Street, Suite 100
Phoenix, Arizona 85020
T 602.371.1100
AECOM
www.aecom.com

ARIZONA DEPARTMENT OF TRANSPORTATION
INFRASTRUCTURE DELIVERY AND OPERATIONS DIVISION
TRAFFIC DESIGN SERVICES

SIGN SUMMARY
SB-IRR 1

Registered Professional Engineer
C. V.
45815
KATE E. BONDY
Date Signed 6/15/2016
ARIZONA, U.S.A.
Expires 3/31/2018

LOCATION
TOHONO O'ODHAM NATION VARIOUS LOCATIONS

DWG NO. T-3.14

TRACS NO. SH643 01C | | ITO-0(208)T | ____ OF ____

6/16/2016 P:¢60306196¢900-Work¢910-CAD¢006_Civil¢Sheets¢SB-IR1_signsummary_05.dgn

NO.1 DESCRIPTION OF REVISION | MADE BY | DATE
NO.2 DESCRIPTION OF REVISION | MADE BY | DATE

Plan Sheet No.	Sign Number	MOAS Sign Code	Work: New	Work: Existing: Replace Panel	Work: Existing: Relocate Panel	Work: Existing: Modify Legend	Work: Existing: Remove	Work: Existing: To Remain	Offset (ft)	Mounting Height	Background Color	Panel: Legend	Panel: Width (in)	Panel: Height (in)	Panel: Area (sq ft)	Panel: Type	Panel: Sheeting Type	Panel: Bid Item Number	Ground Mounted: Foundations	Ground Mounted: Post: Type	Ground Mounted: Post: Total Length (ft)	Ground Mounted: New Slipbases	Stringer: Type	Stringer: Total Length (ft)	Overhead: Structure Type	Overhead: No. of Lights	Remarks
	S-MP11.5A	OM-3(1)R	×								YL	Type 3(1) R						7030080									
	S-MP11.5B	OM-3(1)R	×								YL	Type 3(1) R						7030080									
	S-MP11.3	OM-3(1)R	×								YL	Type 3(1) R						7030080									
	S-MP10.6	W14-3AZ	×						12	7	YL	NO PASSING ZONE	48	36	6	RWM		6080005	2	2 1/2S	25	2					
	S-MP10.5	OM-3(1)R	×								YL	Type 3(1) R						7030080									
	S-MP10.4	OM-3(1)R	×								YL	Type 3(1) R						7030080									
	S-MP10.1	W14-3AZ	×						12	7	YL	NO PASSING ZONE	48	36	6	RWM		6080005	2	2 1/2S	25	2					
	S-MP9.7A	W14-3AZ	×						12	7	YL	NO PASSING ZONE	48	36	6	RWM		6080005	2	2 1/2S	25	2					
	S-MP9.7B	OM-3(1)R	×								YL	Type 3(1) R						7030080									
	S-MP9.6	M1-10a	×				×		12	7	BL	INDIAN 1	24	24	4	RWM		6080005	1	2S	11						
	S-MP9.4	OM-3(1)R	×								YL	Type 3(1) R						7030080									
	S-MP9.3	OM-3(1)R	×								YL	Type 3(1) R						7030080									
	S-MP9.2	OM-3(1)R	×								YL	Type 3(1) R						7030080									
	S-MP9.1	OM-3(1)R	×								YL	Type 3(1) R						7030080									
	S-MP9.0	W1-2R	×				×		12	7	YL	Right Curve Symbol	30	30	6	RWM		6080005	1	2 1/2S	11						
	S-MP8.8A	OM-3(1)R	×								YL	Type 3(1) R						7030080									
	S-MP8.8B	W14-3AZ	×						12	7	YL	NO PASSING ZONE	48	36	6	RWM		6080005	2	2 1/2S	25	2					
	S-MP8.4A	OM-3(1)R	×								YL	Type 3(1) R						7030080									
	S-MP8.4B	W14-3AZ	×						12	7	YL	NO PASSING ZONE	48	36	6	RWM		6080005	2	2 1/2S	25	2					
	S-MP8.3	OM-3(1)R	×								YL	Type 3(1) R						7030080									
	S-MP8.2	OM-3(1)R	×								YL	Type 3(1) R						7030080									
	S-MP8.1	OM-3(1)R	×								YL	Type 3(1) R						7030080									
	S-MP8.0	W11-4	×				×		12	7	YL	Cattle Crossing Symbol	30	30	6	RWM		6080005	1	2 1/2S	11						
	S-MP7.7	OM-3(1)R	×								YL	Type 3(1) R						7030080									
	S-MP7.4	OM-3(1)R	×								YL	Type 3(1) R						7030080									
	S-MP7.0	W14-3AZ	×						12	7	YL	NO PASSING ZONE	48	36	6	RWM		6080005	2	2 1/2S	25	2					

F.H.W.A. REGION	STATE	PROJECT NO.	SHEET NO.	TOTAL SHEETS	RECORD DRAWINGS
9	ARIZ.	ITO-0(208)T	28	65	

0000 PM ITO

DATE | MADE BY | NO.2 DESCRIPTION OF REVISION | DATE | MADE BY | NO.1 DESCRIPTION OF REVISION

Notes:
1. The Contractor shall verify post lengths and elevations.
2. The Engineer may shift a sign in order to achieve a more desirable location.
3. Quantities are approximate and for the Contractor's information only.
4. Offsets are measured from white edge line to edge of sign panel closest to roadway. Where there is no white edge line, measurement shall be taken from face of curb.

Panel Types:
- RWM: Regulatory, Warning, or Marker
- F-DA: Flat-sheet aluminum with direct applied characters
- FYP: Fluorescent Yellow Prismatic
- EXT: Extruded Aluminum

Stringer Types:
- P: Perforated square-tube post
- T: T-section support

Structure Types:
- TT: Tapered tube, single beam

Post Types:
- 2S: 2" Single Perforated
- 2 1/2S: 2 1/2" Single Perforated
- 2 1/2T: 2 1/2" Telescoping

	NAME	DATE
DESIGN	AE	06-16
DRAWN	AE	06-16
CHECKED	KEB	06-16

TRANSPORTATION
AECOM TECHNICAL SERVICES, Inc.
7720 North 16th Street, Suite 100
Phoenix, Arizona 85020
T 602.371.1100
AECOM
www.aecom.com

ARIZONA DEPARTMENT OF TRANSPORTATION
INFRASTRUCTURE DELIVERY AND OPERATIONS DIVISION
TRAFFIC DESIGN SERVICES

SIGN SUMMARY
SB-IRR 1

Registered Professional Engineer
C. E.
45815
KATE E. BONDY
Date Signed 6/15/2016
ARIZONA, U.S.A.
Expires 3/31/2018

LOCATION
TOHONO O'ODHAM NATION VARIOUS LOCATIONS

DWG NO. T-3.15

TRACS NO. SH643 01C | | ITO-0(208)T | ____ OF ____

6/16/2016 P:\60306196\900-Work\910-CAD\006_Civil\Sheets\SB-IR1_signsummary_06.dgn

Plan Sheet No.	Sign Number	MOAS Sign Code	Work						Offset (ft)	Mounting Height	Background Color	Panel							Ground Mounted			Stringer			Overhead		Remarks
			New	Existing								Legend	Width (in)	Height (in)	Area (sq ft)	Type	Sheeting Type	Bid Item Number	Foundations	Post		New Slipbases	Type	Total Length (ft)	Structure Type	No. of Lights	
				Replace Panel	Relocate Panel	Modify Legend	Remove	To Remain												Type	Total Length (ft)						
	S-MP6.9	W8-103	×				×		12	7	YL	DO NOT ENTER WHEN FLOODED	48	24	8	RWM		6080005	2	2S	23						
	S-MP6.8	W8-19	×								YL	Depth Gage	12	72	6	RWM		6080005	1	2S	7						
	S-MP6.4	W14-3AZ	×						12	7	YL	NO PASSING ZONE	48	36	6	RWM		6080005	2	2 1/2S	25	2					
	S-MP6.3A	OM-3(1)R	×								YL	Type 3(1) R						7030080									
	S-MP6.3B	W1-2L	×						12	7	YL	Left Curve Symbol	30	30	6	RWM		6080005	1	2 1/2S	11						
	S-MP4.8	OM-3(1)R	×								YL	Type 3(1) R						7030080									
	S-MP4.5	OM-3(1)R	×								YL	Type 3(1) R						7030080									
	S-MP4.2	OM-3(1)R	×								YL	Type 3(1) R						7030080									
	S-MP3.8	OM-3(1)R	×								YL	Type 3(1) R						7030080									
	S-MP3.7	M1-10a	×				×		12	7	BL	INDIAN 1	24	24	4	RWM		6080005	1	2S	11						
	S-MP3.6	W14-3AZ	×						12	7	YL	NO PASSING ZONE	48	36	6	RWM		6080005	2	2 1/2S	25	2					
	S-MP3.1	OM-3(1)R	×								YL	Type 3(1) R						7030080									
	S-MP2.5	W8-103	×						12	7	YL	DO NOT ENTER WHEN FLOODED	48	24	8	RWM		6080005	2	2S	23						
	S-MP2.4A	W8-19	×								YL	Depth Gage	12	72	6	RWM		6080005	1	2S	7						
	S-MP2.4B	W14-3AZ	×						12	7	YL	NO PASSING ZONE	48	36	6	RWM		6080005	2	2 1/2S	25	2					
	S-MP2.0	OM-3(1)R	×								YL	Type 3(1) R						7030080									
	S-MP1.9A	OM-3(1)R	×								YL	Type 3(1) R						7030080									
	S-MP1.9B	W1-2L	×						12	7	YL	Left Curve Symbol	30	30	6	RWM		6080005	1	2 1/2S	11						
	S-MP1.0	W14-3AZ	×						12	7	YL	NO PASSING ZONE	48	36	6	RWM		6080005	2	2 1/2S	25	2					
	S-MP0.5	W11-2	×				×		12	7	YL	Pedestrian Crossing Symbol	30	30	6	RWM		6080005	1	2 1/2S	11						

F.H.W.A. REGION	STATE	PROJECT NO.	SHEET NO.	TOTAL SHEETS	RECORD DRAWINGS
9	ARIZ.	ITO-0(208)T	29	65	

0000 PM ITO

Notes:
1. The Contractor shall verify post lengths and elevations.
2. The Engineer may shift a sign in order to achieve a more desirable location.
3. Quantities are approximate and for the Contractor's information only.
4. Offsets are measured from white edge line to edge of sign panel closest to roadway. Where there is no white edge line, measurement shall be taken from face of curb.

Panel Types:
RWM: Regulatory, Warning, or Marker
F-DA: Flat-sheet aluminum with direct applied characters
FYP: Fluorescent Yellow Prismatic
EXT: Extruded Aluminum

Stringer Types:
P: Perforated square-tube post
T: T-section support

Structure Types:
TT: Tapered tube, single beam

Post Types:
2S: 2" Single Perforated
2 1/2S: 2 1/2" Single Perforated
2 1/2T: 2 1/2" Telescoping

	NAME	DATE
DESIGN	AE	06-16
DRAWN	AE	06-16
CHECKED	KEB	06-16

TRANSPORTATION
AECOM TECHNICAL SERVICES, Inc.
7720 North 16th Street, Suite 100
Phoenix, Arizona 85020
T 602.371.1100
AECOM
www.aecom.com

ARIZONA DEPARTMENT OF TRANSPORTATION
INFRASTRUCTURE DELIVERY AND OPERATIONS DIVISION
TRAFFIC DESIGN SERVICES

SIGN SUMMARY
SB-IRR 1

Registered Professional Engineer
C. E.
45815
KATE E. BONDY
Date Signed 6/15/2016
ARIZONA, U.S.A.
Expires 3/31/2018

LOCATION
TOHONO O'ODHAM NATION VARIOUS LOCATIONS

DWG NO. T-3.16

TRACS NO. SH643 01C | | ITO-0(208)T | ____ OF ____

6/16/2016 P:\60306196\900-Work\910-CAD\006_Civil\Sheets\SB-IR1_signsummary_07.dgn

NO.1 DESCRIPTION OF REVISION | NO.2 DESCRIPTION OF REVISION | MADE BY | DATE

Plan Sheet No.	Sign Number	MOAS Sign Code	Work						Offset (ft)	Mounting Height	Background Color	Panel							Ground Mounted			Stringer			Overhead		Remarks
				Existing																Post								
			New	Replace Panel	Relocate Panel	Modify Legend	Remove	To Remain				Legend	Width (in)	Height (in)	Area (sq ft)	Type	Sheeting Type	Bid Item Number	Foundations	Type	Total Length (ft)	New Slipbases	Type	Total Length (ft)	Structure Type	No. of Lights	
	N-MP0.1	M1-10a	×				×		12	7	BL	INDIAN 16	24	24	4	RWM		6080005	1	2S	11						
	N-MP0.1	W8-2	×				×		12	7	YL	DIP	30	30	6	RWM		6080005	2	2 1/2S	30	2					
	+	W8-103	×								YL	DO NOT ENTER WHEN FLOODED	48	24	8	RWM		6080005									
	N-MP0.15	W8-19	×								YL	Depth Gage	12	72	6	RWM		6080005	1	2S	7						
	N-MP0.2	R2-1	×				×		12	7	WH	SPEED LIMIT 50	24	30	5	RWM		6080005	1	2 1/2S	12						
	N-MP0.5A	OM-3(1)L	×				×				YL	Type 3(1) L						7030080									
	N-MP0.5B	OM-3(1)R	×				×				YL	Type 3(1) R						7030080									
	N-MP1.32	W14-3AZ	×				×		12	7	YL	NO PASSING ZONE	48	36	6	RWM		6080005	2	2 1/2S	25	2					
	N-MP1.35	W3-5aAZ	×				×		12	7	YL	SPEED REDUCED AHEAD	36	36	9	RWM		6080005	2	2 1/2S	27	2					
	N-MP1.5	R2-1	×				×		12	7	WH	SPEED LIMIT 25	24	30	5	RWM		6080005	1	2 1/2S	12						
	N-MP1.6	R1-1	×				×		12	7	RD	STOP	30	30	6	RWM		6080005	1	2 1/2S	12						
	N-MP2.4A	OM-3(1)L	×				×				YL	Type 3(1) L						7030080									
	N-MP2.4B	OM-3(1)R	×				×				YL	Type 3(1) R						7030080									
	N-MP2.5A	OM-3(1)L	×				×				YL	Type 3(1) L						7030080									
	N-MP2.5B	OM-3(1)R	×				×				YL	Type 3(1) R						7030080									
	N-MP2.8	R2-1	×				×		12	7	WH	SPEED LIMIT 50	24	30	5	RWM		6080005	1	2 1/2S	12						
	N-MP4.0	W14-3AZ	×				×		12	7	YL	NO PASSING ZONE	48	36	6	RWM		6080005	2	2 1/2S	25	2					
	N-MP4.4	R2-1	×				×		12	7	WH	SPEED LIMIT 35	24	30	5	RWM		6080005	1	2 1/2S	12						
	N-MP4.5	W14-3AZ	×				×		12	7	YL	NO PASSING ZONE	48	36	6	RWM		6080005	2	2 1/2S	25	2					
	N-MP4.60	W14-3AZ	×				×		12	7	YL	NO PASSING ZONE	48	36	6	RWM		6080005	2	2 1/2S	25	2					
	N-MP4.61	W8-2	×				×		12	7	YL	DIP	30	30	6	RWM		6080005	2	2 1/2S	30	2					
	+	W8-103	×								YL	DO NOT ENTER WHEN FLOODED	48	24	8	RWM		6080005									
	N-MP4.7	W8-19	×								YL	Depth Gage	12	72	6	RWM		6080005	1	2S	7						
	N-MP5.0	W14-3AZ	×				×		12	7	YL	NO PASSING ZONE	48	36	6	RWM		6080005	2	2 1/2S	25	2					
	N-MP6.3	R1-1	×				×		12	7	RD	STOP	30	30	6	RWM		6080005	1	2 1/2S	12						

F.H.W.A. REGION	STATE	PROJECT NO.	SHEET NO.	TOTAL SHEETS	RECORD DRAWINGS
9	ARIZ.	ITO-0(208)T	30	65	

0000 PM ITO

DATE | MADE BY | DESCRIPTION OF REVISION

NO.2 | DATE | MADE BY | DESCRIPTION OF REVISION

NO.1 | DESCRIPTION OF REVISION

Notes:
1. The Contractor shall verify post lengths and elevations.
2. The Engineer may shift a sign in order to achieve a more desirable location.
3. Quantities are approximate and for the Contractor's information only.
4. Offsets are measured from white edge line to edge of sign panel closest to roadway. Where there is no white edge line, measurement shall be taken from face of curb.

Panel Types:
- RWM: Regulatory, Warning, or Marker
- F-DA: Flat-sheet aluminum with direct applied characters
- FYP: Fluorescent Yellow Prismatic
- EXT: Extruded Aluminum

Stringer Types:
- P: Perforated square-tube post
- T: T-section support

Structure Types:
- TT: Tapered tube, single beam

Post Types:
- 2S: 2" Single Perforated
- 2 1/2S: 2 1/2" Single Perforated
- 2 1/2T: 2 1/2" Telescoping

	NAME	DATE
DESIGN	AE	06-16
DRAWN	AE	06-16
CHECKED	KEB	06-16

TRANSPORTATION
AECOM TECHNICAL SERVICES, Inc.
7720 North 16th Street, Suite 100
Phoenix, Arizona 85020
T 602.371.1100
AECOM
www.aecom.com

ARIZONA DEPARTMENT OF TRANSPORTATION
INFRASTRUCTURE DELIVERY AND OPERATIONS DIVISION
TRAFFIC DESIGN SERVICES

SIGN SUMMARY
NB-IRR 16

Registered Professional Engineer
C. E.
45815
KATE E. BONDY
Date Signed 6/15/2016
ARIZONA, U.S.A.
Expires 3/31/2018

LOCATION
TOHONO O'ODHAM NATION VARIOUS LOCATIONS

DWG NO. T-3.17

TRACS NO. SH643 01C | ITO-0(208)T | ____ OF ____

6/16/2016 P:\60306196\900-Work\910-CAD\006_Civil\Sheets\NB-IRR16_signsummary_01.dgn

Plan Sheet No.	Sign Number	MOAS Sign Code	Work						Offset (ft)	Mounting Height	Background Color	Panel							Ground Mounted			Stringer		Overhead		
				Existing																Post						
			New	Replace Panel	Relocate Panel	Modify Legend	Remove	To Remain				Legend	Width (in)	Height (in)	Area (sq ft)	Type	Sheeting Type	Bid Item Number	Foundations	Type	Total Length (ft)	New Slipbases	Type	Total Length (ft)	Structure Type	No. of Lights	Remarks
	S-MP5.5	R2-1	×				×		12	7	WH	SPEED LIMIT 50	24	30	5	RWM		6080005	1	2 1/2S	12						
	S-MP5.5	W14-3AZ	×				×		12	7	YL	NO PASSING ZONE	48	36	6	RWM		6080005	2	2 1/2S	25	2					
	S-MP4.8	W14-3AZ	×				×		12	7	YL	NO PASSING ZONE	48	36	6	RWM		6080005	2	2 1/2S	25	2					
	S-MP4.78	W8-2	×				×		12	7	YL	DIP	30	30	6	RWM		6080005	2	2 1/2S	30	2					
	+	W8-103	×								YL	DO NOT ENTER WHEN FLOODED	48	24	8	RWM		6080005									
	S-MP4.7	W8-19	×								YL	Depth Gage	12	72	6	RWM		6080005	1	2S	7						
	S-MP4.2	W14-3AZ	×				×		12	7	YL	NO PASSING ZONE	48	36	6	RWM		6080005	2	2 1/2S	25	2					
	S-MP2.8	W14-3AZ	×				×		12	7	YL	NO PASSING ZONE	48	36	6	RWM		6080005	2	2 1/2S	25	2					
	S-MP2.5B	OM-3(1)L	×				×				YL	Type 3(1) L						7030080									
	S-MP2.5A	OM-3(1)R	×				×				YL	Type 3(1) R						7030080									
	S-MP2.4B	OM-3(1)L	×				×				YL	Type 3(1) L						7030080									
	S-MP2.4A	OM-3(1)R	×				×				YL	Type 3(1) R						7030080									
	S-MP1.9	W3-5aAZ	×				×		12	7	YL	SPEED REDUCED AHEAD	36	36	9	RWM		6080005	2	2 1/2S	27	2					
	S-MP1.8	R2-1	×				×		12	7	WH	SPEED LIMIT 25	24	30	5	RWM		6080005	1	2 1/2S	12						
	S-MP0.7	W14-3AZ	×				×		12	7	YL	NO PASSING ZONE	48	36	6	RWM		6080005	2	2 1/2S	25	2					
	S-MP0.5B	OM-3(1)L	×				×				YL	Type 3(1) L						7030080									
	S-MP0.5A	OM-3(1)R	×				×				YL	Type 3(1) R						7030080									
	S-MP0.4	W3-5aAZ	×				×		12	7	YL	SPEED REDUCED AHEAD	36	36	9	RWM		6080005	2	2 1/2S	27	2					
	S-MP0.3	R2-1	×				×		12	7	WH	SPEED LIMIT 25	24	30	5	RWM		6080005	1	2 1/2S	12						
	S-MP0.2	W8-2	×				×		12	7	YL	DIP	30	30	6	RWM		6080005	2	2 1/2S	30	2					
	+	W8-103	×								YL	DO NOT ENTER WHEN FLOODED	48	24	8	RWM		6080005									
	S-MP0.15	W8-19	×								YL	Depth Gage	12	72	6	RWM		6080005	1	2S	7						
	S-MP0	R1-1	×				×		12	7	RD	STOP	30	30	6	RWM		6080005	1	2 1/2S	12						

F.H.W.A. REGION	STATE	PROJECT NO.	SHEET NO.	TOTAL SHEETS	RECORD DRAWINGS
9	ARIZ.	ITO-0(208)T	31	65	

0000 PM ITO

DATE | MADE BY | DESCRIPTION OF REVISION

NO.2 | DATE | MADE BY | DESCRIPTION OF REVISION

NO.1 | DESCRIPTION OF REVISION

Notes:
1. The Contractor shall verify post lengths and elevations.
2. The Engineer may shift a sign in order to achieve a more desirable location.
3. Quantities are approximate and for the Contractor's information only.
4. Offsets are measured from white edge line to edge of sign panel closest to roadway. Where there is no white edge line, measurement shall be taken from face of curb.

Panel Types:
- RWM: Regulatory, Warning, or Marker
- F-DA: Flat-sheet aluminum with direct applied characters
- FYP: Fluorescent Yellow Prismatic
- EXT: Extruded Aluminum

Stringer Types:
- P: Perforated square-tube post
- T: T-section support

Structure Types:
- TT: Tapered tube, single beam

Post Types:
- 2S: 2" Single Perforated
- 2 1/2S: 2 1/2" Single Perforated
- 2 1/2T: 2 1/2" Telescoping

	NAME	DATE
DESIGN	AE	06-16
DRAWN	AE	06-16
CHECKED	KEB	06-16

TRANSPORTATION
AECOM TECHNICAL SERVICES, Inc.
7720 North 16th Street, Suite 100
Phoenix, Arizona 85020
T 602.371.1100
AECOM
www.aecom.com

ARIZONA DEPARTMENT OF TRANSPORTATION
INFRASTRUCTURE DELIVERY AND OPERATIONS DIVISION
TRAFFIC DESIGN SERVICES

SIGN SUMMARY
SB-IRR 16

Registered Professional Engineer
C. E.
45815
KATE E. BONDY
Date Signed 6/16/2016
ARIZONA, U.S.A.
Expires 3/31/2018

LOCATION
TOHONO O'ODHAM NATION VARIOUS LOCATIONS

DWG NO. T-3.18

TRACS NO. SH643 01C | ITO-0(208)T | ____ OF ____

6/16/2016 P:\60306196\900-Work\910-CAD\006_Civil\Sheets\SB-IR16_signsummary_01.dgn

Plan Sheet No.	Sign Number	MOAS Sign Code	Work						Offset (ft)	Mounting Height	Background Color	Panel							Ground Mounted			Stringer		Overhead		Remarks
				Existing																Post							
			New	Replace Panel	Relocate Panel	Modify Legend	Remove	To Remain				Legend	Width (in)	Height (in)	Area (sq ft)	Type	Sheeting Type	Bid Item Number	Foundations	Type	Total Length (ft)	New Slipbases	Type	Total Length (ft)	Structure Type	No. of Lights	
	E-MP7.8	W14-3AZ	×				×		12	7	YL	NO PASSING ZONE	48	36	6	RWM		6080005	2	2 1/2S	25	2					
	E-MP7.8	W3-5aAZ					×				WH	SPEED REDUCED AHEAD															
	E-MP7.7	W1-1R	×						12	7	YL	Right Turn Symbol	30	30	6	RWM		6080005	1	2 1/2S	14						
	+	W13-1P	×								YL	40 M.P.H.	18	18	2	RWM		6080005									
	E-MP6.5	R2-1	×				×		12	7	WH	SPEED LIMIT 55	24	30	5	RWM		6080005	1	2 1/2S	12						
	E-MP3.8A	W14-3AZ	×						12	7	YL	NO PASSING ZONE	48	36	6	RWM		6080005	2	2 1/2S	25	2					
	E-MP3.8B	W1-4L	×						12	7	YL	Left Reverse Curve Symbol	30	30	6	RWM		6080005	1	2 1/2S	11						
	E-MP2.2	OM-3(1)R	×				×				YL	Type 3(1) R						7030080									
	E-MP2.0	OM-3(1)R	×				×				YL	Type 3(1) R						7030080									
	E-MP1.9	W14-3AZ	×						12	7	YL	NO PASSING ZONE	48	36	6	RWM		6080005	2	2 1/2S	25	2					
	E-MP1.8	OM-3(1)R	×				×				YL	Type 3(1) R						7030080									
	E-MP1.5	OM-3(1)R	×				×				YL	Type 3(1) R						7030080									
	E-MP1.2	W14-3AZ	×						12	7	YL	NO PASSING ZONE	48	36	6	RWM		6080005	2	2 1/2S	25	2					
	E-MP1.1A	OM-3(1)R	×								YL	Type 3(1) R						7030080									
	E-MP1.1B	OM-3(1)L	×								YL	Type 3(1) L						7030080									
	E-MP0.6	OM-3(1)R	×				×				YL	Type 3(1) R						7030080									
	E-MP0.5	OM-3(1)R	×				×				YL	Type 3(1) R						7030080									
	E-MP0.4	OM-3(1)R	×				×				YL	Type 3(1) R						7030080									
	E-MP0.3	OM-3(1)R	×				×				YL	Type 3(1) R						7030080									
	E-MP0.2	W14-3AZ	×				×		12	7	YL	NO PASSING ZONE	48	36	6	RWM		6080005	2	2 1/2S	25	2					
	E-MP0.0	R1-1	×				×		12	7	RD	STOP	30	30	6	RWM		6080005	1	2 1/2S	12						

F.H.W.A. REGION	STATE	PROJECT NO.	SHEET NO.	TOTAL SHEETS	RECORD DRAWINGS
9	ARIZ.	ITO-0(208)T	32	65	

0000 PM ITO

DATE | MADE BY | DESCRIPTION OF REVISION

NO.2 | DATE | MADE BY | DESCRIPTION OF REVISION

NO.1 | DESCRIPTION OF REVISION

Notes:
1. The Contractor shall verify post lengths and elevations.
2. The Engineer may shift a sign in order to achieve a more desirable location.
3. Quantities are approximate and for the Contractor's information only.
4. Offsets are measured from white edge line to edge of sign panel closest to roadway. Where there is no white edge line, measurement shall be taken from face of curb.

Panel Types:
- RWM: Regulatory, Warning, or Marker
- F-DA: Flat-sheet aluminum with direct applied characters
- FYP: Fluorescent Yellow Prismatic
- EXT: Extruded Aluminum

Stringer Types:
- P: Perforated square-tube post
- T: T-section support

Structure Types:
- TT: Tapered tube, single beam

Post Types:
- 2S: 2" Single Perforated
- 2 1/2S: 2 1/2" Single Perforated
- 2 1/2T: 2 1/2" Telescoping

	NAME	DATE
DESIGN	AE	06-16
DRAWN	AE	06-16
CHECKED	KEB	06-16

TRANSPORTATION
AECOM TECHNICAL SERVICES, Inc.
7720 North 16th Street, Suite 100
Phoenix, Arizona 85020
T 602.371.1100
AECOM
www.aecom.com

ARIZONA DEPARTMENT OF TRANSPORTATION
INFRASTRUCTURE DELIVERY AND OPERATIONS DIVISION
TRAFFIC DESIGN SERVICES

SIGN SUMMARY
EB-IRR 20

Registered Professional Engineer
C. D.
45815
KATE E. BONDY
Date Signed 6/15/2016
ARIZONA, U.S.A.
Expires 3/31/2018

LOCATION
TOHONO O'ODHAM NATION VARIOUS LOCATIONS

DWG NO. T-3.19

TRACS NO. SH643 01C | | ITO-0(208)T | ____ OF ____

6/16/2016 P:\60306196\900-Work\910-CAD\006_Civil\Sheets\EB-IR20_signsummary_01.dgn

Plan Sheet No.	Sign Number	MOAS Sign Code	Work						Offset (ft)	Mounting Height	Background Color	Panel							Ground Mounted			Stringer			Overhead		Remarks
			New	Existing								Legend	Width (in)	Height (in)	Area (sq ft)	Type	Sheeting Type	Bid Item Number	Foundations	Post		New Slipbases	Type	Total Length (ft)	Structure Type	No. of Lights	
				Replace Panel	Relocate Panel	Modify Legend	Remove	To Remain												Type	Total Length (ft)						
	W-MP0.1	R2-1	×				×		12	7	WH	SPEED LIMIT 55	24	30	5	RWM		6080005	1	2 1/2S	12						
	W-MP0.3	OM-3(1)R	×				×				YL	Type 3(1) R						7030080									
	W-MP0.5A	OM-3(1)R	×				×				YL	Type 3(1) R						7030080									
	W-MP0.5B	W14-3AZ	×						12	7	YL	NO PASSING ZONE	48	36	6	RWM		6080005	2	2 1/2S	25	2					
	W-MP0.6	OM-3(1)R	×				×				YL	Type 3(1) R						7030080									
	W-MP1	D10-1AZ	×				×		12		GR	MILE 1						7030095									
	+	D10-1AZ	×								GR	MILE 1						7030095									Mount Sign Panel Back to Back
	W-MP1.1A	OM-3(1)R	×								YL	Type 3(1) R						7030080									
	W-MP1.1B	OM-3(1)L	×								YL	Type 3(1) L						7030080									
	W-MP1.5A	OM-3(1)R	×				×				YL	Type 3(1) R						7030080									
	W-MP1.5B	W14-3AZ	×						12	7	YL	NO PASSING ZONE	48	36	6	RWM		6080005	2	2 1/2S	25	2					
	W-MP1.8	OM-3(1)R	×				×				YL	Type 3(1) R						7030080									
	W-MP2	D10-1AZ	×				×		12		GR	MILE 2						7030095									
	+	D10-1AZ	×								GR	MILE 2						7030095									Mount Sign Panel Back to Back
	W-MP2.0	OM-3(1)R	×				×				YL	Type 3(1) R						7030080									
	W-MP2.2	OM-3(1)R	×				×				YL	Type 3(1) R						7030080									
	W-MP3	D10-1AZ	×				×		12		GR	MILE 3						7030095									
	+	D10-1AZ	×								GR	MILE 3						7030095									Mount Sign Panel Back to Back
	W-MP3.0	W14-3AZ	×						12	7	YL	NO PASSING ZONE	48	36	6	RWM		6080005	2	2 1/2S	25	2					
	W-MP3.1A	W1-2R					×					Right Curve Symbol															
	W-MP3.1B	W1-4R	×						12	7	YL	Right Reverse Curve Symbol	30	30	6	RWM		6080005	1	2 1/2S	11						
	W-MP4	D10-1AZ	×				×		12		GR	MILE 4						7030095									
	+	D10-1AZ	×								GR	MILE 4						7030095									Mount Sign Panel Back to Back
	W-MP5	D10-1AZ	×				×		12		GR	MILE 5						7030095									
	+	D10-1AZ	×								GR	MILE 5						7030095									Mount Sign Panel Back to Back

F.H.W.A. REGION	STATE	PROJECT NO.	SHEET NO.	TOTAL SHEETS	RECORD DRAWINGS
9	ARIZ.	ITO-0(208)T	33	65	

0000 PM ITO

Notes:
1. The Contractor shall verify post lengths and elevations.
2. The Engineer may shift a sign in order to achieve a more desirable location.
3. Quantities are approximate and for the Contractor's information only.
4. Offsets are measured from white edge line to edge of sign panel closest to roadway. Where there is no white edge line, measurement shall be taken from face of curb.

Panel Types:
- RWM: Regulatory, Warning, or Marker
- F-DA: Flat-sheet aluminum with direct applied characters
- FYP: Fluorescent Yellow Prismatic
- EXT: Extruded Aluminum

Stringer Types:
- P: Perforated square-tube post
- T: T-section support

Structure Types:
- TT: Tapered tube, single beam

Post Types:
- 2S: 2" Single Perforated
- 2 1/2S: 2 1/2" Single Perforated
- 2 1/2T: 2 1/2" Telescoping

	NAME	DATE
DESIGN	AE	06-16
DRAWN	AE	06-16
CHECKED	KEB	06-16

TRANSPORTATION
AECOM TECHNICAL SERVICES, Inc.
7720 North 16th Street, Suite 100
Phoenix, Arizona 85020
T 602.371.1100
AECOM
www.aecom.com

ARIZONA DEPARTMENT OF TRANSPORTATION
INFRASTRUCTURE DELIVERY AND OPERATIONS DIVISION
TRAFFIC DESIGN SERVICES

SIGN SUMMARY
WB-IRR 20

Registered Professional Engineer
C. E.
45815
KATE E. BONDY
Date Signed 6/16/16
ARIZONA, U.S.A.
Expires 3/31/2018

LOCATION
TOHONO O'ODHAM NATION VARIOUS LOCATIONS

DWG NO. T-3.20

TRACS NO. SH643 01C | | ITO-0(208)T | ____ OF ____

6/16/2016 P:\60306196\900-Work\910-CAD\006_Civil\Sheets\WB-IR20_signsummary_01.dgn

NO.1 DESCRIPTION OF REVISION | MADE BY | DATE
NO.2 DESCRIPTION OF REVISION | MADE BY | DATE

Plan Sheet No.	Sign Number	MOAS Sign Code	Work						Offset (ft)	Mounting Height	Background Color	Panel							Ground Mounted			Stringer		Overhead		Remarks
				Existing																Post							
			New	Replace Panel	Relocate Panel	Modify Legend	Remove	To Remain				Legend	Width (in)	Height (in)	Area (sq ft)	Type	Sheeting Type	Bid Item Number	Foundations	Type	Total Length (ft)	New Slipbases	Type	Total Length (ft)	Structure Type	No. of Lights	
	W-MP6	D10-1AZ	×				×		12		GR	MILE 6						7030095								
	+	D10-1AZ	×								GR	MILE 6						7030095								Mount Sign Panel Back to Back
	W-MP7	D10-1AZ	×				×		12		GR	MILE 7						7030095								
	+	D10-1AZ	×								GR	MILE 7						7030095								Mount Sign Panel Back to Back
	W-MP7.4	W3-5aAZ					×		12	7	YL	SPEED REDUCED AHEAD	36	36	9	RWM		6080005	2	2 1/2S	27	2				
	W-MP7.6A	W1-1L	×				×		12	7	YL	Left Turn Symbol	30	30	6	RWM		6080005	1	2 1/2S	14					
	+	W13-1P	×								YL	40 M.P.H.	18	18	2	RWM		6080005								
	W-MP7.6B	W14-3AZ	×						12	7	YL	NO PASSING ZONE	48	36	6	RWM		6080005	2	2 1/2S	25	2				
	W-MP7.7A	W1-8L	×				×		12	5	YL	Left Chevron	24	30	5	RWM		6080005	1	2 1/2S	12					
	W-MP7.7B	W1-8L	×				×		12	5	YL	Left Chevron	24	30	5	RWM		6080005	1	2 1/2S	12					
	+	W1-8R	×				×			5	YL	Right Chevron	24	30	5	RWM		6080005								Mount Sign Panel Back to Back
	W-MP7.7C	W1-8L	×				×		12	5	YL	Left Chevron	24	30	5	RWM		6080005	1	2 1/2S	12					
	+	W1-8R	×				×			5	YL	Right Chevron	24	30	5	RWM		6080005								Mount Sign Panel Back to Back
	W-MP7.7D	W1-8L	×				×		12	5	YL	Left Chevron	24	30	5	RWM		6080005	1	2 1/2S	12					
	+	W1-8R	×				×			5	YL	Right Chevron	24	30	5	RWM		6080005								Mount Sign Panel Back to Back
	W-MP7.7E	W1-8L	×				×		12	5	YL	Left Chevron	24	30	5	RWM		6080005	1	2 1/2S	12					
	+	W1-8R	×				×			5	YL	Right Chevron	24	30	5	RWM		6080005								Mount Sign Panel Back to Back
	W-MP7.7F	W1-8L	×				×		12	5	YL	Left Chevron	24	30	5	RWM		6080005	1	2 1/2S	12					
	+	W1-8R	×				×			5	YL	Right Chevron	24	30	5	RWM		6080005								Mount Sign Panel Back to Back
	W-MP7.7G	W1-8L	×				×		12	5	YL	Left Chevron	24	30	5	RWM		6080005	1	2 1/2S	12					
	+	W1-8R	×				×			5	YL	Right Chevron	24	30	5	RWM		6080005								Mount Sign Panel Back to Back
	W-MP7.7H	W1-8R	×				×		12	5	YL	Right Chevron	24	30	5	RWM		6080005	1	2 1/2S	12					Faces EB Direction

F.H.W.A. REGION	STATE	PROJECT NO.	SHEET NO.	TOTAL SHEETS	RECORD DRAWINGS
9	ARIZ.	ITO-0(208)T	34	65	

0000 PM ITO

Notes:
1. The Contractor shall verify post lengths and elevations.
2. The Engineer may shift a sign in order to achieve a more desirable location.
3. Quantities are approximate and for the Contractor's information only.
4. Offsets are measured from white edge line to edge of sign panel closest to roadway. Where there is no white edge line, measurement shall be taken from face of curb.

Panel Types:
- RWM: Regulatory, Warning, or Marker
- F-DA: Flat-sheet aluminum with direct applied characters
- FYP: Fluorescent Yellow Prismatic
- EXT: Extruded Aluminum

Stringer Types:
- P: Perforated square-tube post
- T: T-section support

Structure Types:
- TT: Tapered tube, single beam

Post Types:
- 2S: 2" Single Perforated
- 2 1/2S: 2 1/2" Single Perforated
- 2 1/2T: 2 1/2" Telescoping

	NAME	DATE
DESIGN	AE	06-16
DRAWN	AE	06-16
CHECKED	KEB	06-16

TRANSPORTATION
AECOM TECHNICAL SERVICES, Inc.
7720 North 16th Street, Suite 100
Phoenix, Arizona 85020
T 602.371.1100
AECOM
www.aecom.com

ARIZONA DEPARTMENT OF TRANSPORTATION
INFRASTRUCTURE DELIVERY AND OPERATIONS DIVISION
TRAFFIC DESIGN SERVICES

SIGN SUMMARY
WB-IRR 20

Registered Professional Engineer
C. E.
45815
KATE E. BONDY
Date Signed 6/15/2016
ARIZONA, U.S.A.
Expires 3/31/2018

LOCATION
TOHONO O'ODHAM NATION VARIOUS LOCATIONS

DWG NO. T-3.21

TRACS NO. SH643 01C | ITO-0(208)T | ____ OF ____

6/16/2016 P:¢60306196¢900-Work¢910-CAD¢006_Civil¢Sheets¢WB-IR20_signsummary_02.dgn

NO.1 DESCRIPTION OF REVISION | MADE BY | DATE
NO.2 DESCRIPTION OF REVISION | MADE BY | DATE

Plan Sheet No.	Sign Number	MOAS Sign Code	Work						Offset (ft)	Mounting Height	Background Color	Panel							Ground Mounted			Stringer			Overhead		Remarks
				Existing																Post							
			New	Replace Panel	Relocate Panel	Modify Legend	Remove	To Remain				Legend	Width (in)	Height (in)	Area (sq ft)	Type	Sheeting Type	Bid Item Number	Foundations	Type	Total Length (ft)	New Slipbases	Type	Total Length (ft)	Structure Type	No. of Lights	
	N-MP11.5A	OM-3(1)R	×				×				YL	Type 3(1) R						7030080									
	N-MP11.5B	OM-3(1)L	×				×				YL	Type 3(1) L						7030080									
	N-MP11.8A	OM-3(1)R	×				×				YL	Type 3(1) R						7030080									
	N-MP11.8B	OM-3(1)L	×				×				YL	Type 3(1) L						7030080									
	N-MP12	D10-2AZ	×				×		12		GR	MILE 12						7030095									
	+	D10-2AZ	×								GR	MILE 12						7030095									Mount Sign Panel Back to Back
	N-MP12.3	D1-1	×				×		12	7	GR	Santa Cruz	60	18	7.5	F-DA		6080025	2	2S	22						See Format
	N-MP12.4	W3-5aAZ	×				×		12	7	YL	SPEED REDUCED AHEAD	36	36	9	RWM		6080005	2	2 1/2S	27	2					
	N-MP12.5	R2-1	×				×		12	7	WH	SPEED LIMIT 35	24	30	5	RWM		6080005	1	2 1/2S	12						
	N-MP12.9	R2-1	×				×		12	7	WH	SPEED LIMIT 55	24	30	5	RWM		6080005	1	2 1/2S	12						
	N-MP13	D10-2AZ	×				×		12		GR	MILE 13						7030095									
	+	D10-2AZ	×								GR	MILE 13						7030095									Mount Sign Panel Back to Back
	N-MP14	D10-2AZ	×				×		12		GR	MILE 14						7030095									
	+	D10-2AZ	×								GR	MILE 14						7030095									Mount Sign Panel Back to Back
	N-MP14.9	W2-2L	×						12	7	YL	Left Side Road Symbol	30	30	6	RWM		6080005	1	2 1/2S	11						
	N-MP15	D10-2AZ	×				×		12		GR	MILE 15						7030095									
	+	D10-2AZ	×								GR	MILE 15						7030095									Mount Sign Panel Back to Back
	N-MP16	D10-2AZ	×				×		12		GR	MILE 16						7030095									
	+	D10-2AZ	×								GR	MILE 16						7030095									Mount Sign Panel Back to Back
	N-MP16.2A	W1-2R	×				×		12	7	YL	Right Curve Symbol	30	30	6	RWM		6080005	1	2 1/2S	11						
	N-MP16.2B	W14-3AZ	×						12	7	YL	NO PASSING ZONE	48	36	6	RWM		6080005	2	2 1/2S	25	2					
	N-MP17	D10-2AZ	×				×		12		GR	MILE 17						7030095									
	+	D10-2AZ	×								GR	MILE 17						7030095									Mount Sign Panel Back to Back
	N-MP17.5	M1-10a	×				×		12	7	BL	INDIAN 21	24	24	4	RWM		6080005	1	2S	11						

F.H.W.A. REGION	STATE	PROJECT NO.	SHEET NO.	TOTAL SHEETS	RECORD DRAWINGS
9	ARIZ.	ITO-0(208)T	35	65	

0000 PM ITO

Notes:
1. The Contractor shall verify post lengths and elevations.
2. The Engineer may shift a sign in order to achieve a more desirable location.
3. Quantities are approximate and for the Contractor's information only.
4. Offsets are measured from white edge line to edge of sign panel closest to roadway. Where there is no white edge line, measurement shall be taken from face of curb.

Panel Types:
- RWM: Regulatory, Warning, or Marker
- F-DA: Flat-sheet aluminum with direct applied characters
- FYP: Fluorescent Yellow Prismatic
- EXT: Extruded Aluminum

Stringer Types:
- P: Perforated square-tube post
- T: T-section support

Structure Types:
- TT: Tapered tube, single beam

Post Types:
- 2S: 2" Single Perforated
- 2 1/2S: 2 1/2" Single Perforated
- 2 1/2T: 2 1/2" Telescoping

	NAME	DATE
DESIGN	AE	06-16
DRAWN	AE	06-16
CHECKED	KEB	06-16

TRANSPORTATION
AECOM TECHNICAL SERVICES, Inc.
7720 North 16th Street, Suite 100
Phoenix, Arizona 85020
T 602.371.1100
AECOM
www.aecom.com

ARIZONA DEPARTMENT OF TRANSPORTATION
INFRASTRUCTURE DELIVERY AND OPERATIONS DIVISION
TRAFFIC DESIGN SERVICES

SIGN SUMMARY
NB-IRR 21

Registered Professional Engineer
C. E.
45815
KATE E. BONDY
Date Signed 6/16/2016
ARIZONA, U.S.A.
Expires 3/31/2018

LOCATION
TOHONO O'ODHAM NATION VARIOUS LOCATIONS

DWG NO. T-3.22

TRACS NO. SH643 01C | | ITO-0(208)T | ____ OF ____

6/16/2016 P:\60306196\900-Work\910-CAD\006_Civil\Sheets\NB-IR21_signsummary_01.dgn

DATE | MADE BY | NO.2 DESCRIPTION OF REVISION | DATE | MADE BY | NO.1 DESCRIPTION OF REVISION

Plan Sheet No.	Sign Number	MOAS Sign Code	Work						Offset (ft)	Mounting Height	Background Color	Panel							Ground Mounted			Stringer		Overhead		Remarks
				Existing																Post							
			New	Replace Panel	Relocate Panel	Modify Legend	Remove	To Remain				Legend	Width (in)	Height (in)	Area (sq ft)	Type	Sheeting Type	Bid Item Number	Foundations	Type	Total Length (ft)	New Slipbases	Type	Total Length (ft)	Structure Type	No. of Lights	
	N-MP17.6	W3-5aAZ	×				×		12	7	YL	SPEED REDUCED AHEAD	36	36	9	RWM		6080005	2	2 1/2S	27	2					
	N-MP17.7	D1-1	×				×		12	7	GR	Pisinemo	54	18	7	F-DA		6080025	2	2S	22						See Format
	N-MP17.8	R2-1	×				×		12	7	WH	SPEED LIMIT 45	24	30	5	RWM		6080005	1	2 1/2S	12						
	N-MP17.9	R2-1	×				×		12	7	WH	SPEED LIMIT 35	24	30	5	RWM		6080005	1	2 1/2S	12						
	N-MP18	D10-2AZ	×				×		12		GR	MILE 18						7030095									
	+	D10-2AZ	×								GR	MILE 18						7030095									Mount Sign Panel Back to Back
	N-MP18.2	W14-3AZ	×						12	7	YL	NO PASSING ZONE	48	36	6	RWM		6080005	2	2 1/2S	25	2					
	N-MP18.3A	R1-1	×				×		12	7	RD	STOP	30	30	6	RWM		6080005	1	2 1/2S	12						Side Road
	N-MP18.3B				×							ROUTE 29															Relocate to Route 29
	N-MP18.6	R2-1	×				×		12	7	WH	SPEED LIMIT 55	24	30	5	RWM		6080005	1	2 1/2S	12						
	N-MP19	D10-2AZ	×				×		12		GR	MILE 19						7030095									
	+	D10-2AZ	×								GR	MILE 19						7030095									Mount Sign Panel Back to Back
	N-MP19.0	W1-2L	×				×		12	7	YL	Left Curve Symbol	30	30	6	RWM		6080005	1	2 1/2S	11						
	N-MP20	D10-2AZ	×				×		12		GR	MILE 20						7030095									
	+	D10-2AZ	×								GR	MILE 20						7030095									Mount Sign Panel Back to Back
	N-MP20.0	W11-4	×				×		12	7	YL	Cattle Crossing Symbol	30	30	6	RWM		6080005	1	2 1/2S	11						
	N-MP20.1	W14-3AZ	×						12	7	YL	NO PASSING ZONE	48	36	6	RWM		6080005	2	2 1/2S	25	2					
	N-MP20.7	W11-4	×				×		12	7	YL	Cattle Crossing Symbol	30	30	6	RWM		6080005	1	2 1/2S	11						
	N-MP21	D10-2AZ	×				×		12		GR	MILE 21						7030095									
	+	D10-2AZ	×								GR	MILE 21						7030095									Mount Sign Panel Back to Back
	N-MP21.8	W14-3AZ	×						12	7	YL	NO PASSING ZONE	48	36	6	RWM		6080005	2	2 1/2S	25	2					
	N-MP22	D10-2AZ	×				×		12		GR	MILE 22						7030095									
	+	D10-2AZ	×								GR	MILE 22						7030095									Mount Sign Panel Back to Back

F.H.W.A. REGION	STATE	PROJECT NO.	SHEET NO.	TOTAL SHEETS	RECORD DRAWINGS
9	ARIZ.	ITO-0(208)T	36	65	

0000 PM ITO

Notes:
1. The Contractor shall verify post lengths and elevations.
2. The Engineer may shift a sign in order to achieve a more desirable location.
3. Quantities are approximate and for the Contractor's information only.
4. Offsets are measured from white edge line to edge of sign panel closest to roadway. Where there is no white edge line, measurement shall be taken from face of curb.

Panel Types:
- RWM: Regulatory, Warning, or Marker
- F-DA: Flat-sheet aluminum with direct applied characters
- FYP: Fluorescent Yellow Prismatic
- EXT: Extruded Aluminum

Stringer Types:
- P: Perforated square-tube post
- T: T-section support

Structure Types:
- TT: Tapered tube, single beam

Post Types:
- 2S: 2" Single Perforated
- 2 1/2S: 2 1/2" Single Perforated
- 2 1/2T: 2 1/2" Telescoping

	NAME	DATE
DESIGN	AE	06-16
DRAWN	AE	06-16
CHECKED	KEB	06-16

TRANSPORTATION
AECOM TECHNICAL SERVICES, Inc.
7720 North 16th Street, Suite 100
Phoenix, Arizona 85020
T 602.371.1100
AECOM
www.aecom.com

ARIZONA DEPARTMENT OF TRANSPORTATION
INFRASTRUCTURE DELIVERY AND OPERATIONS DIVISION
TRAFFIC DESIGN SERVICES

SIGN SUMMARY
NB-IRR 21

Registered Professional Engineer
C. E.
45815
KATE E. BONDY
Date Signed 6/15/2016
ARIZONA, U.S.A.
Expires 3/31/2018

LOCATION
TOHONO O'ODHAM NATION VARIOUS LOCATIONS

DWG NO. T-3.23

TRACS NO. SH643 01C | | ITO-0(208)T | ____ OF ____

6/16/2016 P:\60306196\900-Work\910-CAD\006_Civil\Sheets\NB-IR21_signsummary_02.dgn

DATE | MADE BY | NO.2 DESCRIPTION OF REVISION | DATE | MADE BY | NO.1 DESCRIPTION OF REVISION

F.H.W.A. REGION	STATE	PROJECT NO.	SHEET NO.	TOTAL SHEETS	RECORD DRAWINGS
9	ARIZ.	IT0-0(208)T	37	65	

0000 PM IT0

Plan Sheet No.	Sign Number	MOAS Sign Code	Work						Offset (ft)	Mounting Height	Background Color	Panel							Ground Mounted			Stringer		Overhead		Remarks
				Existing																Post							
			New	Replace Panel	Relocate Panel	Modify Legend	Remove	To Remain				Legend	Width (in)	Height (in)	Area (sq ft)	Type	Sheeting Type	Bid Item Number	Foundations	Type	Total Length (ft)	New Slipbases	Type	Total Length (ft)	Structure Type	No. of Lights	
	N-MP23	D10-2AZ	×				×		12		GR	MILE 23						7030095								
	+	D10-2AZ	×								GR	MILE 23						7030095								Mount Sign Panel Back to Back
	N-MP23.0	W14-3AZ	×						12	7	YL	NO PASSING ZONE	48	36	6	RWM		6080005	2	2 1/2S	25	2				
	N-MP24	D10-2AZ	×				×		12		GR	MILE 24						7030095								
	+	D10-2AZ	×								GR	MILE 24						7030095								Mount Sign Panel Back to Back
	N-MP25	D10-2AZ	×				×		12		GR	MILE 25						7030095								
	+	D10-2AZ	×								GR	MILE 25						7030095								Mount Sign Panel Back to Back
	N-MP25.9	W8-2	×						12	7	YL	DIP	30	30	6	RWM		6080005	1	2 1/2S	11					
	N-MP26	D10-2AZ	×				×		12		GR	MILE 26						7030095								
	+	D10-2AZ	×								GR	MILE 26						7030095								Mount Sign Panel Back to Back
	N-MP26.0	W14-3AZ	×						12	7	YL	NO PASSING ZONE	48	36	6	RWM		6080005	2	2 1/2S	25	2				
	N-MP27	D10-2AZ	×				×		12		GR	MILE 27						7030095								
	+	D10-2AZ	×								GR	MILE 27						7030095								Mount Sign Panel Back to Back
	N-MP28	D10-2AZ	×				×		12		GR	MILE 28						7030095								
	+	D10-2AZ	×								GR	MILE 28						7030095								Mount Sign Panel Back to Back
	N-MP28.4	W8-2	×						12	7	YL	DIP	30	30	6	RWM		6080005	1	2 1/2S	11					
	N-MP28.84	W3-1	×				×		12	7	YL	Stop Ahead Symbol	30	30	6	RWM		6080005	1	2 1/2S	11					

Notes:
1. The Contractor shall verify post lengths and elevations.
2. The Engineer may shift a sign in order to achieve a more desirable location.
3. Quantities are approximate and for the Contractor's information only.
4. Offsets are measured from white edge line to edge of sign panel closest to roadway. Where there is no white edge line, measurement shall be taken from face of curb.

Panel Types:
- RWM: Regulatory, Warning, or Marker
- F-DA: Flat-sheet aluminum with direct applied characters
- FYP: Fluorescent Yellow Prismatic
- EXT: Extruded Aluminum

Stringer Types:
- P: Perforated square-tube post
- T: T-section support

Structure Types:
- TT: Tapered tube, single beam

Post Types:
- 2S: 2" Single Perforated
- 2 1/2S: 2 1/2" Single Perforated
- 2 1/2T: 2 1/2" Telescoping

	NAME	DATE
DESIGN	AE	06-16
DRAWN	AE	06-16
CHECKED	KEB	06-16

TRANSPORTATION
AECOM TECHNICAL SERVICES, Inc.
7720 North 16th Street, Suite 100
Phoenix, Arizona 85020
T 602.371.1100
AECOM
www.aecom.com

ARIZONA DEPARTMENT OF TRANSPORTATION
INFRASTRUCTURE DELIVERY AND OPERATIONS DIVISION
TRAFFIC DESIGN SERVICES

SIGN SUMMARY
NB-IRR 21

LOCATION
TOHONO O'ODHAM NATION VARIOUS LOCATIONS

DWG NO. T-3.24

TRACS NO. SH643 01C | ITO-0(208)T | ___ OF ___

Registered Professional Engineer
C.E.
45815
KATE E. BONDY
Date Signed 6/15/2016
ARIZONA, U.S.A.
Expires 3/31/2018

6/16/2016 P:\60306196\900-Work\910-CAD\006_Civil\Sheets\NB-IR21_signsummary_03.dgn

DATE | MADE BY | NO.2 DESCRIPTION OF REVISION | DATE | MADE BY | NO.1 DESCRIPTION OF REVISION

Plan Sheet No.	Sign Number	MOAS Sign Code	Work						Offset (ft)	Mounting Height	Background Color	Panel							Ground Mounted			Stringer			Overhead		Remarks
				Existing																Post								
			New	Replace Panel	Relocate Panel	Modify Legend	Remove	To Remain				Legend	Width (in)	Height (in)	Area (sq ft)	Type	Sheeting Type	Bid Item Number	Foundations	Type	Total Length (ft)	New Slipbases	Type	Total Length (ft)	Structure Type	No. of Lights	
	S-MP28.85	R2-1	×				×		12	7	WH	SPEED LIMIT 55	24	30	5	RWM		6080005	1	2 1/2S	12						
	S-MP28.75	M1-10a	×				×		12	7	BL	INDIAN 21	24	24	4	RWM		6080005	1	2S	11						
	S-MP28.2	W8-2	×				×		12	7	YL	DIP	30	30	6	RWM		6080005	1	2 1/2S	11						
	S-MP26.4	W14-3AZ	×						12	7	YL	NO PASSING ZONE	48	36	6	RWM		6080005	2	2 1/2S	25	2					
	S-MP26.35	W8-2	×				×		12	7	YL	DIP	30	30	6	RWM		6080005	1	2 1/2S	11						
	S-MP23.3	W14-3AZ	×						12	7	YL	NO PASSING ZONE	48	36	6	RWM		6080005	2	2 1/2S	25	2					
	S-MP22.2	W14-3AZ	×						12	7	YL	NO PASSING ZONE	48	36	6	RWM		6080005	2	2 1/2S	25	2					
	S-MP20.2	W1-2L	×				×		12	7	YL	Left Curve Symbol	30	30	6	RWM		6080005	1	2 1/2S	11						
	S-MP20.1A	W14-3AZ	×						12	7	YL	NO PASSING ZONE	48	36	6	RWM		6080005	2	2 1/2S	25	2					
	S-MP20.1B	W1-8L	×						12	5	YL	Left Chevron	24	30	5	RWM		6080005	1	2 1/2S	12						
	S-MP20.1C	W1-8L	×						12	5	YL	Left Chevron	24	30	5	RWM		6080005	1	2 1/2S	12						
	+	W1-8R	×				×			5	YL	Right Chevron	24	30	5	RWM		6080005									Mount Sign Panel Back to Back
	S-MP20.1D	W1-8L	×						12	5	YL	Left Chevron	24	30	5	RWM		6080005	1	2 1/2S	12						
	+	W1-8R	×				×			5	YL	Right Chevron	24	30	5	RWM		6080005									Mount Sign Panel Back to Back
	S-MP20.1E	W1-8L	×						12	5	YL	Left Chevron	24	30	5	RWM		6080005	1	2 1/2S	12						
	+	W1-8R	×				×			5	YL	Right Chevron	24	30	5	RWM		6080005									Mount Sign Panel Back to Back
	S-MP20.1F	W1-8L	×						12	5	YL	Left Chevron	24	30	5	RWM		6080005	1	2 1/2S	12						
	+	W1-8R	×				×			5	YL	Right Chevron	24	30	5	RWM		6080005									Mount Sign Panel Back to Back
	S-MP20.1G	W1-8R	×						12	5	YL	Right Chevron	24	30	5	RWM		6080005	1	2 1/2S	12						Faces NB Direction
	S-MP19.5	W1-2R	×				×		12	7	YL	Right Curve Symbol	30	30	6	RWM		6080005	1	2 1/2S	11						
	S-MP19.1	W3-5aAZ	×				×		12	7	YL	SPEED REDUCED AHEAD	36	36	9	RWM		6080005	2	2 1/2S	27	2					
	S-MP19.0	R2-1	×				×		12	7	WH	SPEED LIMIT 45	24	30	5	RWM		6080005	1	2 1/2S	12						
	S-MP18.8	R2-1	×				×		12	7	WH	SPEED LIMIT 35	24	30	5	RWM		6080005	1	2 1/2S	12						
	S-MP18.7	R1-1	×				×		12	7	RD	STOP	30	30	6	RWM		6080005	1	2 1/2S	12						Side Road
	S-MP18.5	W1-2R	×				×		12	7	YL	Right Curve Symbol	30	30	6	RWM		6080005	1	2 1/2S	11						

F.H.W.A. REGION	STATE	PROJECT NO.	SHEET NO.	TOTAL SHEETS	RECORD DRAWINGS
9	ARIZ.	ITO-0(208)T	38	65	
		0000 PM ITO			

DATE | MADE BY | NO.2 DESCRIPTION OF REVISION | DATE | MADE BY | NO.1 DESCRIPTION OF REVISION

Notes:
1. The Contractor shall verify post lengths and elevations.
2. The Engineer may shift a sign in order to achieve a more desirable location.
3. Quantities are approximate and for the Contractor's information only.
4. Offsets are measured from white edge line to edge of sign panel closest to roadway. Where there is no white edge line, measurement shall be taken from face of curb.

Panel Types:
RWM: Regulatory, Warning, or Marker
F-DA: Flat-sheet aluminum with direct applied characters
FYP: Fluorescent Yellow Prismatic
EXT: Extruded Aluminum

Stringer Types:
P: Perforated square-tube post
T: T-section support

Structure Types:
TT: Tapered tube, single beam

Post Types:
2S: 2" Single Perforated
2 1/2S: 2 1/2" Single Perforated
2 1/2T: 2 1/2" Telescoping

	NAME	DATE
DESIGN	AE	06-16
DRAWN	AE	06-16
CHECKED	KEB	06-16

TRANSPORTATION
AECOM TECHNICAL SERVICES, Inc.
7720 North 16th Street, Suite 100
Phoenix, Arizona 85020
T 602.371.1100
AECOM
www.aecom.com

ARIZONA DEPARTMENT OF TRANSPORTATION
INFRASTRUCTURE DELIVERY AND OPERATIONS DIVISION
TRAFFIC DESIGN SERVICES

SIGN SUMMARY
SB-IRR 21

Registered Professional Engineer
C. E. P.
45815
KATE E. BONDY
Date Signed 6/15/2016
ARIZONA, U.S.A.
Expires 3/31/2018

LOCATION
TOHONO O'ODHAM NATION VARIOUS LOCATIONS

DWG NO. T-3.25

TRACS NO. SH643 01C | ITO-0(208)T | ____ OF ____

6/16/2016 P:\60306196\900-Work\910-CAD\006_Civil\Sheets\SB-IR21_signsummary_01.dgn

Plan Sheet No.	Sign Number	MOAS Sign Code	Work						Offset (ft)	Mounting Height	Background Color	Panel							Ground Mounted			Stringer			Overhead		Remarks
			New	Existing																Post							
				Replace Panel	Relocate Panel	Modify Legend	Remove	To Remain				Legend	Width (in)	Height (in)	Area (sq ft)	Type	Sheeting Type	Bid Item Number	Foundations	Type	Total Length (ft)	New Slipbases	Type	Total Length (ft)	Structure Type	No. of Lights	
	S-MP18.4	D1-1	×				×		12	7	GR	Pisinemo	54	18	7	F-DA		6080025	2	2S	22						See Format
	S-MP18.3	W14-3AZ	×						12	7	YL	NO PASSING ZONE	48	36	6	RWM		6080005	2	2 1/2S	25	2					
	S-MP18.2	R1-1	×				×		12	7	RD	STOP	30	30	6	RWM		6080005	1	2 1/2S	12						Side Road
	S-MP18.1	R1-1	×				×		12	7	RD	STOP	30	30	6	RWM		6080005	1	2 1/2S	12						Side Road
	S-MP17.7	R2-1	×				×		12	7	WH	SPEED LIMIT 55	24	30	5	RWM		6080005	1	2 1/2S	12						
	S-MP16.5	W14-3AZ	×						12	7	YL	NO PASSING ZONE	48	36	6	RWM		6080005	2	2 1/2S	25	2					
	S-MP16.3	W1-2L	×				×		12	7	YL	Left Curve Symbol	30	30	6	RWM		6080005	1	2 1/2S	11						
	S-MP12.9	R2-1	×				×		12	7	WH	SPEED LIMIT 35	24	30	5	RWM		6080005	1	2 1/2S	12						
	S-MP12.7	D1-1	×				×		12	7	GR	Santa Cruz	60	18	8	F-DA		6080025	2	2S	22						See Format
	S-MP12.3	W14-3AZ	×						12	7	YL	NO PASSING ZONE	48	36	6	RWM		6080005	2	2 1/2S	25	2					
	S-MP12.2	W1-2L	×				×		12	7	YL	Left Curve Symbol	30	30	6	RWM		6080005	1	2 1/2S	11						
	S-MP12.1A	W1-8L	×						12	5	YL	Left Chevron	24	30	5	RWM		6080005	1	2 1/2S	12						
	S-MP12.1B	W1-8L	×						12	5	YL	Left Chevron	24	30	5	RWM		6080005	1	2 1/2S	12						
	+	W1-8R	×							5	YL	Right Chevron	24	30	5	RWM		6080005									Mount Sign Panel Back to Back
	S-MP12.1C	W1-8L	×						12	5	YL	Left Chevron	24	30	5	RWM		6080005	1	2 1/2S	12						
	+	W1-8R	×							5	YL	Right Chevron	24	30	5	RWM		6080005									Mount Sign Panel Back to Back
	S-MP12.1D	W1-8L	×						12	5	YL	Left Chevron	24	30	5	RWM		6080005	1	2 1/2S	12						
	+	W1-8R	×							5	YL	Right Chevron	24	30	5	RWM		6080005									Mount Sign Panel Back to Back
	S-MP12.1E	W1-8L	×						12	5	YL	Left Chevron	24	30	5	RWM		6080005	1	2 1/2S	12						
	+	W1-8R	×							5	YL	Right Chevron	24	30	5	RWM		6080005									Mount Sign Panel Back to Back
	S-MP12.1F	W1-8L	×						12	5	YL	Left Chevron	24	30	5	RWM		6080005	1	2 1/2S	12						
	+	W1-8R	×							5	YL	Right Chevron	24	30	5	RWM		6080005									Mount Sign Panel Back to Back
	S-MP12.1G	W1-8L	×						12	5	YL	Right Chevron	24	30	5	RWM		6080005	1	2 1/2S	12						Faces NB Direction
	S-MP11.8A	OM-3(1)R	×				×				YL	Type 3(1) R						7030080									
	S-MP11.8B	OM-3(1)L	×				×				YL	Type 3(1) L						7030080									
	S-MP11.5A	OM-3(1)R	×				×				YL	Type 3(1) R						7030080									
	S-MP11.5B	OM-3(1)L	×				×				YL	Type 3(1) L						7030080									

F.H.W.A. REGION	STATE	PROJECT NO.	SHEET NO.	TOTAL SHEETS	RECORD DRAWINGS
9	ARIZ.	ITO-0(208)T	39	65	

0000 PM ITO

Notes:
1. The Contractor shall verify post lengths and elevations.
2. The Engineer may shift a sign in order to achieve a more desirable location.
3. Quantities are approximate and for the Contractor's information only.
4. Offsets are measured from white edge line to edge of sign panel closest to roadway. Where there is no white edge line, measurement shall be taken from face of curb.

Panel Types:
- RWM: Regulatory, Warning, or Marker
- F-DA: Flat-sheet aluminum with direct applied characters
- FYP: Fluorescent Yellow Prismatic
- EXT: Extruded Aluminum

Stringer Types:
- P: Perforated square-tube post
- T: T-section support

Structure Types:
- TT: Tapered tube, single beam

Post Types:
- 2S: 2" Single Perforated
- 2 1/2S: 2 1/2" Single Perforated
- 2 1/2T: 2 1/2" Telescoping

	NAME	DATE
DESIGN	AE	06-16
DRAWN	AE	06-16
CHECKED	KEB	06-16

TRANSPORTATION
AECOM TECHNICAL SERVICES, Inc.
7720 North 16th Street, Suite 100
Phoenix, Arizona 85020
T 602.371.1100
AECOM
www.aecom.com

ARIZONA DEPARTMENT OF TRANSPORTATION
INFRASTRUCTURE DELIVERY AND OPERATIONS DIVISION
TRAFFIC DESIGN SERVICES

SIGN SUMMARY
SB-IRR 21

LOCATION
TOHONO O'ODHAM NATION VARIOUS LOCATIONS

Registered Professional Engineer
C.E.
45815
KATE E. BONDY
Date Signed 6/15/2016
ARIZONA, U.S.A.
Expires 3/31/2018

DWG NO. T-3.26

TRACS NO. SH643 01C | ITO-0(208)T | ____ OF ____

6/16/2016 P:\60306196\900-Work\910-CAD\006_Civil\Sheets\SB-IR21_signsummary_02.dgn

NO.2 DESCRIPTION OF REVISION | DATE | MADE BY
NO.1 DESCRIPTION OF REVISION | DATE | MADE BY

Plan Sheet No.	Sign Number	MOAS Sign Code	Work: New	Work: Existing: Replace Panel	Work: Existing: Relocate Panel	Work: Existing: Modify Legend	Work: Existing: Remove	Work: Existing: To Remain	Offset (ft)	Mounting Height	Background Color	Panel: Legend	Panel: Width (in)	Panel: Height (in)	Panel: Area (sq ft)	Panel: Type	Panel: Sheeting Type	Panel: Bid Item Number	Ground Mounted: Foundations	Ground Mounted: Post: Type	Ground Mounted: Post: Total Length (ft)	Stringer: New Slipbases	Stringer: Type	Stringer: Total Length (ft)	Overhead: Structure Type	Overhead: No. of Lights	Remarks
	E-MP10.8A	W8-2	×				×		12	7	YL	DIP	30	30	6	RWM		6080005	2	2 1/2S	30	2					
	+	W8-103	×								YL	DO NOT ENTER WHEN FLOODED	48	24	8	RWM		6080005									
	E-MP10.8B	W8-19	×								YL	Depth Gage	12	72	6	RWM		6080005	1	2S	7						
	E-MP10.7	R2-1	×				×		12	7	WH	SPEED LIMIT 35	24	30	5	RWM		6080005	1	2 1/2S	12						
	E-MP10.3A	W8-2	×				×		12	7	YL	DIP	30	30	6	RWM		6080005	2	2 1/2S	30	2					
	+	W8-103	×								YL	DO NOT ENTER WHEN FLOODED	48	24	8	RWM		6080005									
	E-MP10.3B	W8-19	×								YL	Depth Gage	12	72	6	RWM		6080005	1	2S	7						
	E-MP10.25	W1-2R	×				×		12	7	YL	Right Curve Symbol	30	30	6	RWM		6080005	1	2 1/2S	11						
	E-MP10.1A	OM-3(1)R	×				×				YL	Type 3(1) R						7030080									
	E-MP10.1B	W14-3AZ	×						12	7	YL	NO PASSING ZONE	48	36	6	RWM		6080005	2	2 1/2S	25	2					
	E-MP9.4	OM-3(1)R	×				×				YL	Type 3(1) R						7030080									
	E-MP9.3	W1-5R	×				×		12	7	YL	Right Winding Road Symbol	30	30	6	RWM		6080005	1	2 1/2S	11						
	E-MP9.1	R1-1	×						12	7	RD	STOP	30	30	6	RWM		6080005	1	2 1/2S	12						Side Road
	E-MP8.8	W14-3AZ	×						12	7	YL	NO PASSING ZONE	48	36	6	RWM		6080005	2	2 1/2S	25	2					
	E-MP8.3	R2-1	×				×		12	7	WH	SPEED LIMIT 35	24	30	5	RWM		6080005	1	2 1/2S	12						
	E-MP8.2	OM-3(1)R	×				×				YL	Type 3(1) R						7030080									
	E-MP8.1	W1-2R	×				×		12	7	YL	Right Curve Symbol	30	30	6	RWM		6080005	1	2 1/2S	11						
	E-MP7.1	R2-1	×				×		12	7	WH	SPEED LIMIT 55	24	30	5	RWM		6080005	1	2 1/2S	12						
	E-MP6.9	W11-4	×				×		12	7	YL	Cattle Crossing Symbol	30	30	6	RWM		6080005	1	2 1/2S	11						
	E-MP6.3	W14-3AZ	×						12	7	YL	NO PASSING ZONE	48	36	6	RWM		6080005	2	2 1/2S	25	2					
	E-MP5.3	W1-2L	×				×		12	7	YL	Left Curve Symbol	30	30	6	RWM		6080005	1	2 1/2S	11						
	E-MP5.1	W14-3AZ	×						12	7	YL	NO PASSING ZONE	48	36	6	RWM		6080005	2	2 1/2S	25	2					

F.H.W.A. REGION	STATE	PROJECT NO.	SHEET NO.	TOTAL SHEETS	RECORD DRAWINGS
9	ARIZ.	ITO-0(208)T	40	65	

0000 PM ITO

DATE | MADE BY | DESCRIPTION OF REVISION

NO.2 | DATE | MADE BY | DESCRIPTION OF REVISION

NO.1 | DATE | MADE BY | DESCRIPTION OF REVISION

Notes:
1. The Contractor shall verify post lengths and elevations.
2. The Engineer may shift a sign in order to achieve a more desirable location.
3. Quantities are approximate and for the Contractor's information only.
4. Offsets are measured from white edge line to edge of sign panel closest to roadway. Where there is no white edge line, measurement shall be taken from face of curb.

Panel Types:
- RWM: Regulatory, Warning, or Marker
- F-DA: Flat-sheet aluminum with direct applied characters
- FYP: Fluorescent Yellow Prismatic
- EXT: Extruded Aluminum

Stringer Types:
- P: Perforated square-tube post
- T: T-section support

Structure Types:
- TT: Tapered tube, single beam

Post Types:
- 2S: 2" Single Perforated
- 2 1/2S: 2 1/2" Single Perforated
- 2 1/2T: 2 1/2" Telescoping

	NAME	DATE
DESIGN	AE	06-16
DRAWN	AE	06-16
CHECKED	KEB	06-16

TRANSPORTATION
AECOM TECHNICAL SERVICES, Inc.
7720 North 16th Street, Suite 100
Phoenix, Arizona 85020
T 602.371.1100
AECOM
www.aecom.com

ARIZONA DEPARTMENT OF TRANSPORTATION
INFRASTRUCTURE DELIVERY AND OPERATIONS DIVISION
TRAFFIC DESIGN SERVICES

SIGN SUMMARY
EB-IRR 24

Registered Professional Engineer
45815
KATE E. BONDY
Date Signed 6/15/2016
ARIZONA, U.S.A.
Expires 3/31/2018

LOCATION
TOHONO O'ODHAM NATION VARIOUS LOCATIONS

DWG NO. T-3.27

TRACS NO. SH643 01C | ITO-0(208)T | ____ OF ____

6/16/2016 P:\60306196\900-Work\910-CAD\006_Civil\Sheets\EB-IR24_signsummary_01.dgn

Plan Sheet No.	Sign Number	MOAS Sign Code	Work						Offset (ft)	Mounting Height	Background Color	Panel							Ground Mounted			Stringer			Overhead		Remarks
			New	Existing								Legend	Width (in)	Height (in)	Area (sq ft)	Type	Sheeting Type	Bid Item Number	Foundations	Post		New Slipbases	Type	Total Length (ft)	Structure Type	No. of Lights	
				Replace Panel	Relocate Panel	Modify Legend	Remove	To Remain												Type	Total Length (ft)						
	E-MP5.0A	W1-8L	×				×		12	5	YL	Left Chevron	24	30	5	RWM		6080005	1	2 1/2S	12						
	E-MP5.0B	W1-8L	×				×		12	5	YL	Left Chevron	24	30	5	RWM		6080005	1	2 1/2S	12						
	+	W1-8R	×				×			5	YL	Right Chevron	24	30	5	RWM		6080005									Mount Sign Panel Back to Back
	E-MP5.0C	W1-8L	×				×		12	5	YL	Left Chevron	24	30	5	RWM		6080005	1	2 1/2S	12						
	+	W1-8R	×				×			5	YL	Right Chevron	24	30	5	RWM		6080005									Mount Sign Panel Back to Back
	E-MP5.0D	W1-8L	×				×		12	5	YL	Left Chevron	24	30	5	RWM		6080005	1	2 1/2S	12						
	+	W1-8R	×				×			5	YL	Right Chevron	24	30	5	RWM		6080005									Mount Sign Panel Back to Back
	E-MP5.0E	W1-8R	×				×		12	5	YL	Left Chevron	24	30	5	RWM		6080005	1	2 1/2S	12						
	+	W1-8R	×				×			5	YL	Right Chevron	24	30	5	RWM		6080005									Mount Sign Panel Back to Back
	E-MP5.0F	W1-8R	×				×		12	5	YL	Left Chevron	24	30	5	RWM		6080005	1	2 1/2S	12						
	+	W1-8R	×				×			5	YL	Right Chevron	24	30	5	RWM		6080005									Mount Sign Panel Back to Back
	E-MP5.0G	W1-8R	×				×		12	5	YL	Left Chevron	24	30	5	RWM		6080005	1	2 1/2S	12						
	+	W1-8R	×				×			5	YL	Right Chevron	24	30	5	RWM		6080005									Mount Sign Panel Back to Back
	E-MP5.0H	W1-8R	×				×		12	5	YL	Right Chevron	24	30	5	RWM		6080005	1	2 1/2S	12						Faces WB Direction
	E-MP4.0	OM-3(1)R	×				×				YL	Type 3(1) R						7030080									
	E-MP0.8	W3-5aAZ	×				×		12	7	YL	SPEED REDUCED AHEAD	36	36	9	RWM		6080005	2	2 1/2S	27	2					
	E-MP0.6	R2-1	×				×		12	7	WH	SPEED LIMIT 35	24	30	5	RWM		6080005	1	2 1/2S	12						
	E-M0.0	R1-1	×				×		12	7	RD	STOP	30	30	6	RWM		6080005	1	2 1/2S	12						

F.H.W.A. REGION	STATE	PROJECT NO.	SHEET NO.	TOTAL SHEETS	RECORD DRAWINGS
9	ARIZ.	ITO-0(208)T	41	65	

0000 PM ITO

DATE | MADE BY | NO.2 DESCRIPTION OF REVISION | DATE | MADE BY | NO.1 DESCRIPTION OF REVISION

Notes:
1. The Contractor shall verify post lengths and elevations.
2. The Engineer may shift a sign in order to achieve a more desirable location.
3. Quantities are approximate and for the Contractor's information only.
4. Offsets are measured from white edge line to edge of sign panel closest to roadway. Where there is no white edge line, measurement shall be taken from face of curb.

Panel Types:
- RWM: Regulatory, Warning, or Marker
- F-DA: Flat-sheet aluminum with direct applied characters
- FYP: Fluorescent Yellow Prismatic
- EXT: Extruded Aluminum

Stringer Types:
- P: Perforated square-tube post
- T: T-section support

Structure Types:
- TT: Tapered tube, single beam

Post Types:
- 2S: 2" Single Perforated
- 2 1/2S: 2 1/2" Single Perforated
- 2 1/2T: 2 1/2" Telescoping

	NAME	DATE
DESIGN	AE	06-16
DRAWN	AE	06-16
CHECKED	KEB	06-16

TRANSPORTATION
AECOM TECHNICAL SERVICES, Inc.
7720 North 16th Street, Suite 100
Phoenix, Arizona 85020
T 602.371.1100
AECOM
www.aecom.com

ARIZONA DEPARTMENT OF TRANSPORTATION
INFRASTRUCTURE DELIVERY AND OPERATIONS DIVISION
TRAFFIC DESIGN SERVICES

SIGN SUMMARY
EB-IRR 24

Registered Professional Engineer
C. E.
45815
KATE E. BONDY
Date Signed 6/17/2016
ARIZONA, U.S.A.
Expires 3/31/2018

LOCATION
TOHONO O'ODHAM NATION VARIOUS LOCATIONS

DWG NO. T-3.28

TRACS NO. SH643 01C | ITO-0(208)T | ____ OF ____

6/16/2016 P:\60306196\900-Work\910-CAD\006_Civil\Sheets\EB-IR24_signsummary_02.dgn

Plan Sheet No.	Sign Number	MOAS Sign Code	Work						Offset (ft)	Mounting Height	Background Color	Panel							Ground Mounted			Stringer			Overhead		Remarks
				Existing																Post								
			New	Replace Panel	Relocate Panel	Modify Legend	Remove	To Remain				Legend	Width (in)	Height (in)	Area (sq ft)	Type	Sheeting Type	Bid Item Number	Foundations	Type	Total Length (ft)	New Slipbases	Type	Total Length (ft)	Structure Type	No. of Lights	
	W-MP0.1	M1-10a	×				×		12	7	BL	INDIAN 24	24	24	4	RWM		6080005	1	2S	11						
	W-MP0.6	R2-1	×				×		12	7	WH	SPEED LIMIT 55	24	30	5	RWM		6080005	1	2 1/2S	12						
	W-MP0.8	W11-4	×				×		12	7	YL	Cattle Crossing Symbol	30	30	6	RWM		6080005	1	2 1/2S	11						
	W-MP1	D10-1AZ	×				×		12		GR	MILE 1						7030095									
	+	D10-1AZ	×								GR	MILE 1						7030095									Mount Sign Panel Back to Back
	W-MP1.6	W14-3AZ	×						12	7	YL	NO PASSING ZONE	48	36	6	RWM		6080005	2	2 1/2S	25	2					
	W-MP1.7	W1-2R	×				×		12	7	YL	Right Curve Symbol	30	30	6	RWM		6080005	1	2 1/2S	11						
	W-MP2	D10-1AZ	×				×		12		GR	MILE 2						7030095									
	+	D10-1AZ	×								GR	MILE 2						7030095									Mount Sign Panel Back to Back
	W-MP3	D10-1AZ	×				×		12		GR	MILE 3						7030095									
	+	D10-1AZ	×								GR	MILE 3						7030095									Mount Sign Panel Back to Back
	W-MP4	D10-1AZ	×				×		12		GR	MILE 4						7030095									
	+	D10-1AZ	×								GR	MILE 4						7030095									Mount Sign Panel Back to Back
	W-MP4.0	OM-3(1)R	×				×				YL	Type 3(1) R						7030080									
	W-MP4.9	W1-2R	×				×		12	7	YL	Right Curve Symbol	30	30	6	RWM		6080005	1	2 1/2S	11						
	W-MP5	D10-1AZ	×				×		12		GR	MILE 5						7030095									
	+	D10-1AZ	×								GR	MILE 5						7030095									Mount Sign Panel Back to Back
	W-MP5.0	W14-3AZ	×						12	7	YL	NO PASSING ZONE	48	36	6	RWM		6080005	2	2 1/2S	25	2					
	W-MP5.8	W1-2L	×				×		12	7	YL	Left Curve Symbol	30	30	6	RWM		6080005	1	2 1/2S	11						
	W-MP5.8A	W1-8L	×				×		12	5	YL	Left Chevron	24	30	5	RWM		6080005	1	2 1/2S	12						
	W-MP5.8B	W1-8L	×				×		12	5	YL	Left Chevron	24	30	5	RWM		6080005	1	2 1/2S	12						
	+	W1-8R	×				×			5	YL	Right Chevron	24	30	5	RWM		6080005									Mount Sign Panel Back to Back
	W-MP5.8C	W1-8L	×				×		12	5	YL	Left Chevron	24	30	5	RWM		6080005	1	2 1/2S	12						
	+	W1-8R	×				×			5	YL	Right Chevron	24	30	5	RWM		6080005									Mount Sign Panel Back to Back

F.H.W.A. REGION	STATE	PROJECT NO.	SHEET NO.	TOTAL SHEETS	RECORD DRAWINGS
9	ARIZ.	ITO-0(208)T	42	65	

0000 PM ITO

Notes:
1. The Contractor shall verify post lengths and elevations.
2. The Engineer may shift a sign in order to achieve a more desirable location.
3. Quantities are approximate and for the Contractor's information only.
4. Offsets are measured from white edge line to edge of sign panel closest to roadway. Where there is no white edge line, measurement shall be taken from face of curb.

Panel Types:
- RWM: Regulatory, Warning, or Marker
- F-DA: Flat-sheet aluminum with direct applied characters
- FYP: Fluorescent Yellow Prismatic
- EXT: Extruded Aluminum

Stringer Types:
- P: Perforated square-tube post
- T: T-section support

Structure Types:
- TT: Tapered tube, single beam

Post Types:
- 2S: 2" Single Perforated
- 2 1/2S: 2 1/2" Single Perforated
- 2 1/2T: 2 1/2" Telescoping

	NAME	DATE
DESIGN	AE	06-16
DRAWN	AE	06-16
CHECKED	KEB	06-16

TRANSPORTATION
AECOM TECHNICAL SERVICES, Inc.
7720 North 16th Street, Suite 100
Phoenix, Arizona 85020
T 602.371.1100
AECOM
www.aecom.com

ARIZONA DEPARTMENT OF TRANSPORTATION
INFRASTRUCTURE DELIVERY AND OPERATIONS DIVISION
TRAFFIC DESIGN SERVICES

SIGN SUMMARY
WB-IRR 24

Registered Professional Engineer
CERTIFICATE NO.
45815
KATE E. BONDY
Date Signed 6/15/2016
ARIZONA, U.S.A.
Expires 3/31/2018

LOCATION
TOHONO O'ODHAM NATION VARIOUS LOCATIONS

DWG NO. T-3.29

TRACS NO. SH643 01C | ITO-0(208)T | ____ OF ____

6/16/2016 P:\60306196\900-Work\910-CAD\006_Civil\Sheets\WB-IR24_signsummary_01.dgn

NO.1 DESCRIPTION OF REVISION MADE BY DATE
NO.2 DESCRIPTION OF REVISION MADE BY DATE

F.H.W.A. REGION	STATE	PROJECT NO.	SHEET NO.	TOTAL SHEETS	RECORD DRAWINGS
9	ARIZ.	IT0-0(208)T	43	65	

0000 PM IT0

Plan Sheet No.	Sign Number	MOAS Sign Code	Work: New	Work: Existing: Replace Panel	Work: Existing: Relocate Panel	Work: Existing: Modify Legend	Work: Existing: Remove	Work: Existing: To Remain	Offset (ft)	Mounting Height	Background Color	Panel: Legend	Panel: Width (in)	Panel: Height (in)	Panel: Area (sq ft)	Panel: Type	Panel: Sheeting Type	Panel: Bid Item Number	Ground Mounted: Foundations	Ground Mounted: Post: Type	Ground Mounted: Post: Total Length (ft)	Stringer: New Slipbases	Stringer: Type	Stringer: Total Length (ft)	Overhead: Structure Type	Overhead: No. of Lights	Remarks
	W-MP5.8D	W1-8L	×				×		12	5	YL	Left Chevron	24	30	5	RWM		6080005	1	2 1/2S	12						
	+	W1-8R	×				×			5	YL	Right Chevron	24	30	5	RWM		6080005									Mount Sign Panel Back to Back
	W-MP5.8E	W1-8L	×				×		12	5	YL	Left Chevron	24	30	5	RWM		6080005	1	2 1/2S	12						
	+	W1-8R	×				×			5	YL	Right Chevron	24	30	5	RWM		6080005									Mount Sign Panel Back to Back
	W-MP5.8F	W1-8L	×				×		12	5	YL	Left Chevron	24	30	5	RWM		6080005	1	2 1/2S	12						
	+	W1-8R	×				×			5	YL	Right Chevron	24	30	5	RWM		6080005									Mount Sign Panel Back to Back
	W-MP5.8G	W1-8L	×				×		12	5	YL	Left Chevron	24	30	5	RWM		6080005	1	2 1/2S	12						
	+	W1-8R	×				×			5	YL	Right Chevron	24	30	5	RWM		6080005									Mount Sign Panel Back to Back
	W-MP5.8H	W1-8R	×				×		12	5	YL	Right Chevron	24	30	5	RWM		6080005	1	2 1/2S	12						Faces EB Direction
	W-MP5.9	W14-3AZ	×						12	7	YL	NO PASSING ZONE	48	36	6	RWM		6080005	2	2 1/2S	25	2					
	W-MP6	D10-1AZ	×				×		12		GR	MILE 6						7030095									
	+	D10-1AZ	×								GR	MILE 6						7030095									Mount Sign Panel Back to Back
	W-MP6.8	D1-1	×				×		12	7	GR	Big Fields	54	18	7	F-DA		6080025	2	2S	22						See Format
	W-MP6.9	W3-5aAZ	×				×		12	7	YL	SPEED REDUCED AHEAD	36	36	9	RWM		6080005	2	2 1/2S	27	2					
	W-MP7	D10-1AZ	×				×		12		GR	MILE 7						7030095									
	+	D10-1AZ	×								GR	MILE 7						7030095									Mount Sign Panel Back to Back
	W-MP7.1	R2-1	×				×		12	7	WH	SPEED LIMIT 35	24	30	5	RWM		6080005	1	2 1/2S	12						
	W-MP7.2	W11-4	×				×		12	7	YL	Cattle Crossing Symbol	30	30	6	RWM		6080005	1	2 1/2S	11						
	W-MP7.6	W14-3AZ	×						12	7	YL	NO PASSING ZONE	48	36	6	RWM		6080005	2	2 1/2S	25	2					
	W-MP7.7	W1-2L	×				×		12	7	YL	Left Curve Symbol	30	30	6	RWM		6080005	1	2 1/2S	11						
	W-MP7.8	W8-2	×				×		12	7	YL	DIP	30	30	6	RWM		6080005	1	2 1/2S	11						
	W-MP8	D10-1AZ	×				×		12		GR	MILE 8						7030095									
	+	D10-1AZ	×								GR	MILE 8						7030095									Mount Sign Panel Back to Back
	W-MP8.2	OM-3(1)R	×				×				YL	Type 3(1) R						7030080									
	W-MP8.5	R2-1	×				×		12	7	WH	SPEED LIMIT 35	24	30	5	RWM		6080005	1	2 1/2S	12						

Notes:
1. The Contractor shall verify post lengths and elevations.
2. The Engineer may shift a sign in order to achieve a more desirable location.
3. Quantities are approximate and for the Contractor's information only.
4. Offsets are measured from white edge line to edge of sign panel closest to roadway. Where there is no white edge line, measurement shall be taken from face of curb.

Panel Types:
- RWM: Regulatory, Warning, or Marker
- F-DA: Flat-sheet aluminum with direct applied characters
- FYP: Fluorescent Yellow Prismatic
- EXT: Extruded Aluminum

Stringer Types:
- P: Perforated square-tube post
- T: T-section support

Structure Types:
- TT: Tapered tube, single beam

Post Types:
- 2S: 2" Single Perforated
- 2 1/2S: 2 1/2" Single Perforated
- 2 1/2T: 2 1/2" Telescoping

	NAME	DATE
DESIGN	AE	06-16
DRAWN	AE	06-16
CHECKED	KEB	06-16

TRANSPORTATION
AECOM TECHNICAL SERVICES, Inc.
7720 North 16th Street, Suite 100
Phoenix, Arizona 85020
T 602.371.1100
AECOM
www.aecom.com

ARIZONA DEPARTMENT OF TRANSPORTATION
INFRASTRUCTURE DELIVERY AND OPERATIONS DIVISION
TRAFFIC DESIGN SERVICES

SIGN SUMMARY
WB-IRR 24

Registered Professional Engineer
C. E.
45815
KATE E. BONDY
Date Signed 6/15/2016
ARIZONA, U.S.A.
Expires 3/31/2018

LOCATION
TOHONO O'ODHAM NATION VARIOUS LOCATIONS

DWG NO. T-3.30

TRACS NO. SH643 01C | | IT0-0(208)T | ____ OF ____

6/16/2016 P:\60306196\900-Work\910-CAD\006_Civil\Sheets\WB-IR24_signsummary_02.dgn

DATE | MADE BY | NO.2 DESCRIPTION OF REVISION | DATE | MADE BY | NO.1 DESCRIPTION OF REVISION

Plan Sheet No.	Sign Number	MOAS Sign Code	Work						Offset (ft)	Mounting Height	Background Color	Panel							Ground Mounted			Stringer			Overhead		Remarks
			New	Existing								Legend	Width (in)	Height (in)	Area (sq ft)	Type	Sheeting Type	Bid Item Number	Foundations	Post		New Slipbases	Type	Total Length (ft)	Structure Type	No. of Lights	
				Replace Panel	Relocate Panel	Modify Legend	Remove	To Remain												Type	Total Length (ft)						
	W-MP8.6	W1-5R	×				×		12	7	YL	Right Winding Road Symbol	30	30	6	RWM		6080005	1	2 1/2S	11						
	W-MP8.8	W14-3AZ	×						12	7	YL	NO PASSING ZONE	48	36	6	RWM		6080005	2	2 1/2S	25	2					
	W-MP9	D10-1AZ	×				×		12		GR	MILE 9						7030095									
	+	D10-1AZ	×								GR	MILE 9						7030095									Mount Sign Panel Back to Back
	W-MP9.1	W14-3AZ	×						12	7	YL	NO PASSING ZONE	48	36	6	RWM		6080005	2	2 1/2S	25	2					
	W-MP9.4	OM-3(1)R	×				×				YL	Type 3(1) R						7030080									
	W-MP9.6	W1-2L	×				×		12	7	YL	Left Curve Symbol	30	30	6	RWM		6080005	1	2 1/2S	11						
	W-MP10	D10-2AZ	×				×		12		GR	MILE 10						7030095									
	+	D10-2AZ	×								GR	MILE 10						7030095									Mount Sign Panel Back to Back
	W-MP10.1	OM-3(1)R	×				×				YL	Type 3(1) R						7030080									
	W-MP10.2A	W8-2	×				×		12	7	YL	DIP	30	30	6	RWM		6080005	2	2 1/2S	30	2					
	+	W8-103	×								YL	DO NOT ENTER WHEN FLOODED	48	24	8	RWM		6080005									
	W-MP10.2B	W8-19	×								YL	Depth Gage	12	72	6	RWM		6080005	1	2S	7						
	W-MP10.6A	W8-2	×						12	7	YL	DIP	30	30	6	RWM		6080005	2	2 1/2S	30						
	+	W8-103	×								YL	DO NOT ENTER WHEN FLOODED	48	24	8	RWM		6080005									
	W-MP10.6B	W8-19	×								YL	Depth Gage	12	72	6	RWM		6080005	1	2S	7						
	W-MP10.8	W8-3	×						12	7	YL	PAVEMENT ENDS	36	36	9	RWM		6080005	2	2 1/2S	27						

F.H.W.A. REGION	STATE	PROJECT NO.	SHEET NO.	TOTAL SHEETS	RECORD DRAWINGS
9	ARIZ.	ITO-0(208)T	44	65	

0000 PM ITO

DATE | MADE BY | DESCRIPTION OF REVISION

NO.2 | DESCRIPTION OF REVISION | DATE | MADE BY

NO.1 | DESCRIPTION OF REVISION

Notes:
1. The Contractor shall verify post lengths and elevations.
2. The Engineer may shift a sign in order to achieve a more desirable location.
3. Quantities are approximate and for the Contractor's information only.
4. Offsets are measured from white edge line to edge of sign panel closest to roadway. Where there is no white edge line, measurement shall be taken from face of curb.

Panel Types:
- RWM: Regulatory, Warning, or Marker
- F-DA: Flat-sheet aluminum with direct applied characters
- FYP: Fluorescent Yellow Prismatic
- EXT: Extruded Aluminum

Stringer Types:
- P: Perforated square-tube post
- T: T-section support

Structure Types:
- TT: Tapered tube, single beam

Post Types:
- 2S: 2" Single Perforated
- 2 1/2S: 2 1/2" Single Perforated
- 2 1/2T: 2 1/2" Telescoping

	NAME	DATE
DESIGN	AE	06-16
DRAWN	AE	06-16
CHECKED	KEB	06-16

TRANSPORTATION
AECOM TECHNICAL SERVICES, Inc.
7720 North 16th Street, Suite 100
Phoenix, Arizona 85020
T 602.371.1100
AECOM
www.aecom.com

ARIZONA DEPARTMENT OF TRANSPORTATION
INFRASTRUCTURE DELIVERY AND OPERATIONS DIVISION
TRAFFIC DESIGN SERVICES

SIGN SUMMARY
WB-IRR 24

Registered Professional Engineer
C. E.
45815
KATE E. BONDY
Date Signed 6/15/2016
ARIZONA, U.S.A.
Expires 3/31/2018

LOCATION
TOHONO O'ODHAM NATION VARIOUS LOCATIONS

DWG NO. T-3.31

TRACS NO. SH643 01C | ITO-0(208)T | ____ OF ____

6/16/2016 P:\60306196\900-Work\910-CAD\006_Civil\Sheets\WB-IR24_signsummary_03.dgn

Plan Sheet No.	Sign Number	MOAS Sign Code	Work						Offset (ft)	Mounting Height	Background Color	Panel							Ground Mounted			Stringer		Overhead		Remarks
			New	Existing								Legend	Width (in)	Height (in)	Area (sq ft)	Type	Sheeting Type	Bid Item Number	Foundations	Post Type	Post Total Length (ft)	New Slipbases	Type	Total Length (ft)	Structure Type	No. of Lights	
				Replace Panel	Relocate Panel	Modify Legend	Remove	To Remain																		
												NORTHBOUND														
	N-MP0.6	W3-5aAZ	×				×		12	7	YL	SPEED REDUCED AHEAD	36	36	9	RWM		6080005	2	2 1/2S	27	2					On Segment 1 of IRR 29
	N-MP0.8	R2-1	×				×		12	7	WH	SPEED LIMIT 35	24	30	5	RWM		6080005	1	2 1/2S	12						On Segment 1 of IRR 29
	N-MP2.1	M1-10a	×				×		12	7	BL	INDIAN 29	24	24	4	RWM		6080005	1	2S	11						On Segment 2 of IRR 29
	N-MP4.0	W8-3	×						12	7	YL	PAVEMENT ENDS	36	36	9	RWM		6080005	2	2 1/2S	27	2					On Segment 2 of IRR 29
												SOUTHBOUND														
	S-M2.1	R1-1	×				×		12	7	RD	STOP	30	30	6	RWM		6080005	1	2 1/2S	12						On Segment 2 of IRR 29
	S-MP1.2	W3-5aAZ	×				×		12	7	YL	SPEED REDUCED AHEAD	36	36	9	RWM		6080005	2	2 1/2S	27	2					On Segment 1 of IRR 29
	S-MP1.1	R2-1	×				×		12	7	WH	SPEED LIMIT 35	24	30	5	RWM		6080005	1	2 1/2S	12						On Segment 1 of IRR 29
	S-MP0.2	W3-1	×						12	7	YL	Stop Ahead Symbol	30	30	6	RWM		6080005	1	2 1/2S	11						On Segment 1 of IRR 29
	S-M0.0	R1-1	×				×		12	7	RD	STOP	30	30	6	RWM		6080005	1	2 1/2S	12						On Segment 1 of IRR 29

F.H.W.A. REGION	STATE	PROJECT NO.	SHEET NO.	TOTAL SHEETS	RECORD DRAWINGS
9	ARIZ.	ITO-0(208)T	45	65	

0000 PM ITO

Notes:

1. The Contractor shall verify post lengths and elevations.
2. The Engineer may shift a sign in order to achieve a more desirable location.
3. Quantities are approximate and for the Contractor's information only.
4. Offsets are measured from white edge line to edge of sign panel closest to roadway. Where there is no white edge line, measurement shall be taken from face of curb.

Panel Types:

RWM: Regulatory, Warning, or Marker
F-DA: Flat-sheet aluminum with direct applied characters
FYP: Fluorescent Yellow Prismatic
EXT: Extruded Aluminum

Stringer Types:

P: Perforated square-tube post
T: T-section support

Structure Types:

TT: Tapered tube, single beam

Post Types:

2S: 2" Single Perforated
2 1/2S: 2 1/2" Single Perforated
2 1/2T: 2 1/2" Telescoping

	NAME	DATE
DESIGN	AE	06-16
DRAWN	AE	06-16
CHECKED	KEB	06-16

TRANSPORTATION
AECOM TECHNICAL SERVICES, Inc.
7720 North 16th Street, Suite 100
Phoenix, Arizona 85020
T 602.371.1100
AECOM
www.aecom.com

ARIZONA DEPARTMENT OF TRANSPORTATION
INFRASTRUCTURE DELIVERY AND OPERATIONS DIVISION
TRAFFIC DESIGN SERVICES

SIGN SUMMARY
IRR 29

Registered Professional Engineer
C. E.
45815
KATE E. BONDY
Date Signed 6/15/2016
ARIZONA, U.S.A.
Expires 3/31/2018

LOCATION
TOHONO O'ODHAM NATION VARIOUS LOCATIONS

DWG NO. T-3.32

TRACS NO. SH643 01C | | ITO-0(208)T | ____ OF ____

6/16/2016 P:¢60306196¢900-Work¢910-CAD¢006_Civil¢Sheets¢NB & SB-IR29_signsummary_01.dgn

DATE | MADE BY | DESCRIPTION OF REVISION
NO.2
NO.1

Plan Sheet No.	Sign Number	MOAS Sign Code	Work						Offset (ft)	Mounting Height	Background Color	Panel							Ground Mounted			Stringer		Overhead		Remarks
				Existing																Post							
			New	Replace Panel	Relocate Panel	Modify Legend	Remove	To Remain				Legend	Width (in)	Height (in)	Area (sq ft)	Type	Sheeting Type	Bid Item Number	Foundations	Type	Total Length (ft)	New Slipbases	Type	Total Length (ft)	Structure Type	No. of Lights	
	E-MP0.5	W1-5L	×				×		12	7	YL	Left Winding Road Symbol	30	30	6	RWM		6080005	1	2 1/2S	11						
	E-MP1	D10-1AZ	×						12		GR	MILE 1						7030095									
	+	D10-1AZ	×								GR	MILE 1						7030095									Mount Sign Panel Back to Back
	E-MP1.1	W1-2L	×				×		12	7	YL	Left Curve Symbol	30	30	6	RWM		6080005	1	2 1/2S	11						
	E-MP1.5	W1-2L	×				×		12	7	YL	Right Curve Symbol	30	30	6	RWM		6080005	1	2 1/2S	11						
	E-MP1.7	W8-2	×				×		12	7	YL	DIP	30	30	6	RWM		6080005	1	2 1/2S	11						
	E-MP2	D10-1AZ	×						12		GR	MILE 2						7030095									
	+	D10-1AZ	×								GR	MILE 2						7030095									Mount Sign Panel Back to Back
	E-MP2.4	W11-2	×				×		12	7	YL	Pedestrian Crossing Symbol	30	30	6	RWM		6080005	1	2 1/2S	11						
	E-MP2.8	W1-2R	×						12	7	YL	Right Curve Symbol	30	30	6	RWM		6080005	1	2 1/2S	11						
	E-MP3	D10-1AZ	×						12		GR	MILE 3						7030095									
	+	D10-1AZ	×								GR	MILE 3						7030095									Mount Sign Panel Back to Back
	E-MP3.0	W8-2	×								YL	DIP															
	E-MP3.8	W1-1L	×				×		12	7	YL	Left Turn Symbol	30	30	6	RWM		6080005	1	2 1/2S	11						
	E-MP4	D10-1AZ	×						12		GR	MILE 4						7030095									
	+	D10-1AZ	×								GR	MILE 4						7030095									Mount Sign Panel Back to Back
	E-MP4.0	W1-5L	×						12	7	YL	Left Winding Road Symbol	30	30	6	RWM		6080005	1	2 1/2S	11						
	E-MP5	D10-1AZ	×						12		GR	MILE 5						7030095									
	+	D10-1AZ	×								GR	MILE 5						7030095									Mount Sign Panel Back to Back
	E-MP5.1	W11-4	×				×		12	7	YL	Cattle Crossing Symbol	30	30	6	RWM		6080005	1	2 1/2S	11						
	E-MP5.7	R2-1	×				×		12	7	WH	SPEED LIMIT 55	24	30	5	RWM		6080005	1	2 1/2S	12						
	E-MP6	D10-1AZ	×						12		GR	MILE 6						7030095									
	+	D10-1AZ	×								GR	MILE 6						7030095									Mount Sign Panel Back to Back

F.H.W.A. REGION	STATE	PROJECT NO.	SHEET NO.	TOTAL SHEETS	RECORD DRAWINGS
9	ARIZ.	ITO-0(208)T	46	65	

0000 PM ITO

Notes:
1. The Contractor shall verify post lengths and elevations.
2. The Engineer may shift a sign in order to achieve a more desirable location.
3. Quantities are approximate and for the Contractor's information only.
4. Offsets are measured from white edge line to edge of sign panel closest to roadway. Where there is no white edge line, measurement shall be taken from face of curb.

Panel Types:
- RWM: Regulatory, Warning, or Marker
- F-DA: Flat-sheet aluminum with direct applied characters
- FYP: Fluorescent Yellow Prismatic
- EXT: Extruded Aluminum

Stringer Types:
- P: Perforated square-tube post
- T: T-section support

Structure Types:
- TT: Tapered tube, single beam

Post Types:
- 2S: 2" Single Perforated
- 2 1/2S: 2 1/2" Single Perforated
- 2 1/2T: 2 1/2" Telescoping

	NAME	DATE
DESIGN	AE	06-16
DRAWN	AE	06-16
CHECKED	KEB	06-16

TRANSPORTATION
AECOM TECHNICAL SERVICES, Inc.
7720 North 16th Street, Suite 100
Phoenix, Arizona 85020
T 602.371.1100
AECOM
www.aecom.com

ARIZONA DEPARTMENT OF TRANSPORTATION
INFRASTRUCTURE DELIVERY AND OPERATIONS DIVISION
TRAFFIC DESIGN SERVICES

SIGN SUMMARY
EB-IRR 30 (SEGMENT 1)

Registered Professional Engineer
C. E.
45815
KATE E. BONDY
Date Signed 6/17/2016
ARIZONA, U.S.A.
Expires 3/31/2018

LOCATION
TOHONO O'ODHAM NATION VARIOUS LOCATIONS

DWG NO. T-3.33

TRACS NO. SH643 01C | | ITO-0(208)T | ____ OF ____

6/16/2016 P:\60306196\900-Work\910-CAD\006_Civil\Sheets\EB-IR30W_signsummary_01.dgn

DATE | MADE BY | NO.2 DESCRIPTION OF REVISION | DATE | MADE BY | NO.1 DESCRIPTION OF REVISION

F.H.W.A. REGION	STATE	PROJECT NO.	SHEET NO.	TOTAL SHEETS	RECORD DRAWINGS
9	ARIZ.	ITO-0(208)T	47	65	
		0000 PM ITO			

Plan Sheet No.	Sign Number	MOAS Sign Code	Work: New	Work: Existing: Replace Panel	Work: Existing: Relocate Panel	Work: Existing: Modify Legend	Work: Existing: Remove	Work: Existing: To Remain	Offset (ft)	Mounting Height	Background Color	Panel: Legend	Panel: Width (in)	Panel: Height (in)	Panel: Area (sq ft)	Panel: Type	Panel: Sheeting Type	Panel: Bid Item Number	Ground Mounted: Foundations	Ground Mounted: Post: Type	Ground Mounted: Post: Total Length (ft)	Ground Mounted: New Slipbases	Stringer: Type	Stringer: Total Length (ft)	Overhead: Structure Type	Overhead: No. of Lights	Remarks
	E-MP6.7	W1-5L	×				×		12	7	YL	Left Winding Road Symbol	30	30	6	RWM		6080005	1	2 1/2S	14						
	+	W13-1P	×								YL	45 M.P.H.	18	18	2	RWM		6080005									
	E-MP6.9	W3-5aAZ	×				×		12	7	YL	SPEED REDUCED AHEAD	36	36	9	RWM		6080005	2	2 1/2S	27	2					
	E-MP7	D10-1AZ	×						12		GR	MILE 7						7030095									
	+	D10-1AZ	×								GR	MILE 7						7030095									Mount Sign Panel Back to Back
	E-MP7.0	R2-1	×				×		12	7	WH	SPEED LIMIT 35	24	30	5	RWM		6080005	1	2 1/2S	12						
	E-MP7.5	W8-2	×						12	7	YL	DIP	30	30	6	RWM		6080005	1	2 1/2S	11						
	E-MP8	D10-1AZ	×						12		GR	MILE 8						7030095									
	+	D10-1AZ	×								GR	MILE 8						7030095									Mount Sign Panel Back to Back
	E-MP8.2A	OM-3(1)R	×				×				YL	Type 3(1) R						7030080									
	E-MP8.2B	OM-3(1)L	×				×				YL	Type 3(1) L						7030080									
	E-MP9	D10-1AZ	×						12		GR	MILE 9						7030095									
	+	D10-1AZ	×								GR	MILE 9						7030095									Mount Sign Panel Back to Back
	E-MP9.0	W8-3	×				×		12	7	YL	PAVEMENT ENDS	36	36	9	RWM		6080005	2	2 1/2S	27	2					

Notes:
1. The Contractor shall verify post lengths and elevations.
2. The Engineer may shift a sign in order to achieve a more desirable location.
3. Quantities are approximate and for the Contractor's information only.
4. Offsets are measured from white edge line to edge of sign panel closest to roadway. Where there is no white edge line, measurement shall be taken from face of curb.

Panel Types:
- RWM: Regulatory, Warning, or Marker
- F-DA: Flat-sheet aluminum with direct applied characters
- FYP: Fluorescent Yellow Prismatic
- EXT: Extruded Aluminum

Stringer Types:
- P: Perforated square-tube post
- T: T-section support

Structure Types:
- TT: Tapered tube, single beam

Post Types:
- 2S: 2" Single Perforated
- 2 1/2S: 2 1/2" Single Perforated
- 2 1/2T: 2 1/2" Telescoping

	NAME	DATE
DESIGN	AE	06-16
DRAWN	AE	06-16
CHECKED	KEB	06-16

TRANSPORTATION
AECOM TECHNICAL SERVICES, Inc.
7720 North 16th Street, Suite 100
Phoenix, Arizona 85020
T 602.371.1100
AECOM
www.aecom.com

ARIZONA DEPARTMENT OF TRANSPORTATION
INFRASTRUCTURE DELIVERY AND OPERATIONS DIVISION
TRAFFIC DESIGN SERVICES

SIGN SUMMARY
EB-IRR 30 (SEGMENT 1)

Registered Professional Engineer
C. E.
45815
KATE E. BONDY
Date Signed 6/16/2016
ARIZONA, U.S.A.
Expires 3/31/2018

LOCATION
TOHONO O'ODHAM NATION VARIOUS LOCATIONS

DWG NO. T-3.34

TRACS NO. SH643 01C | | ITO-0(208)T | ____ OF ____

6/16/2016 P:¢60306196¢900-Work¢910-CAD¢006_Civil¢Sheets¢EB-IR30W_signsummary_02.dgn

DATE | MADE BY | NO.2 DESCRIPTION OF REVISION | DATE | MADE BY | NO.1 DESCRIPTION OF REVISION

Plan Sheet No.	Sign Number	MOAS Sign Code	Work						Offset (ft)	Mounting Height	Background Color	Panel							Ground Mounted			Stringer			Overhead		Remarks
				Existing																Post								
			New	Replace Panel	Relocate Panel	Modify Legend	Remove	To Remain				Legend	Width (in)	Height (in)	Area (sq ft)	Type	Sheeting Type	Bid Item Number	Foundations	Type	Total Length (ft)	New Slipbases	Type	Total Length (ft)	Structure Type	No. of Lights	
	W-MP8.5	W1-2L	×				×		12	7	YL	Left Curve Symbol	30	30	6	RWM		6080005	1	2 1/2S	11						
	W-MP8.2A	OM-3(1)R	×				×				YL	Type 3(1) R						7030080									
	W-MP8.2B	OM-3(1)L	×				×				YL	Type 3(1) L						7030080									
	W-MP7.6	W3-5aAZ	×				×		12	7	YL	SPEED REDUCED AHEAD	36	36	9	RWM		6080005	2	2 1/2S	27	2					
	W-MP7.5	R2-1	×				×		12	7	WH	SPEED LIMIT 35	24	30	5	RWM		6080005	1	2 1/2S	12						
	W-MP7.4	W8-2	×				×		12	7	YL	DIP	30	30	6	RWM		6080005	1	2 1/2S	11						
	W-MP6.9	W1-5L	×				×		12	7	YL	Left Winding Road Symbol	30	30	6	RWM		6080005	1	2 1/2S	11						
	W-M5.0	R1-1	×				×		12	7	RD	STOP	30	30	6	RWM		6080005	1	2 1/2S	12						
	W-MP5.0	W1-7	×				×		12	7	YL	Two Direction Large Arrow	48	24	8	RWM		6080005	2	2S	23						
	W-MP4.9	W1-5L	×				×		12	7	YL	Left Winding Road Symbol	30	30	6	RWM		6080005	1	2 1/2S	11						
	W-MP4.1	W1-1R	×				×		12	7	YL	Right Turn Symbol	30	30	6	RWM		6080005	1	2 1/2S	11						
	W-MP2.8	W11-2	×				×		12	7	YL	Pedestrian Crossing Symbol	30	30	6	RWM		6080005	1	2 1/2S	11						
	W-MP2.5	W8-2	×						12	7	YL	DIP	30	30	6	RWM		6080005	1	2 1/2S	11						
	W-MP2.0	W1-5R	×						12	7	YL	Right Winding Road Symbol	30	30	6	RWM		6080005	1	2 1/2S	11						
	W-MP1.3	W1-2R	×				×		12	7	YL	Right Curve Symbol	30	30	6	RWM		6080005	1	2 1/2S	11						
	W-MP0.1	W3-1	×				×		12	7	YL	STOP AHEAD	30	30	6	RWM		6080005	1	2 1/2S	11						

F.H.W.A. REGION	STATE	PROJECT NO.	SHEET NO.	TOTAL SHEETS	RECORD DRAWINGS
9	ARIZ.	ITO-0(208)T	48	65	

0000 PM ITO

DATE | MADE BY | NO.2 DESCRIPTION OF REVISION | DATE | MADE BY | NO.1 DESCRIPTION OF REVISION

Notes:
1. The Contractor shall verify post lengths and elevations.
2. The Engineer may shift a sign in order to achieve a more desirable location.
3. Quantities are approximate and for the Contractor's information only.
4. Offsets are measured from white edge line to edge of sign panel closest to roadway. Where there is no white edge line, measurement shall be taken from face of curb.

Panel Types:
- RWM: Regulatory, Warning, or Marker
- F-DA: Flat-sheet aluminum with direct applied characters
- FYP: Fluorescent Yellow Prismatic
- EXT: Extruded Aluminum

Stringer Types:
- P: Perforated square-tube post
- T: T-section support

Structure Types:
- TT: Tapered tube, single beam

Post Types:
- 2S: 2" Single Perforated
- 2 1/2S: 2 1/2" Single Perforated
- 2 1/2T: 2 1/2" Telescoping

	NAME	DATE
DESIGN	AE	06-16
DRAWN	AE	06-16
CHECKED	KEB	06-16

TRANSPORTATION
AECOM TECHNICAL SERVICES, Inc.
7720 North 16th Street, Suite 100
Phoenix, Arizona 85020
T 602.371.1100
AECOM
www.aecom.com

ARIZONA DEPARTMENT OF TRANSPORTATION
INFRASTRUCTURE DELIVERY AND OPERATIONS DIVISION
TRAFFIC DESIGN SERVICES

SIGN SUMMARY
WB-IRR 30 (SEGMENT 1)

Registered Professional Engineer
C. E.
45815
KATE E. BONDY
Date Signed 6/15/2016
ARIZONA, U.S.A.
Expires 3/31/2018

LOCATION
TOHONO O'ODHAM NATION VARIOUS LOCATIONS

DWG NO. T-3.35

TRACS NO. SH643 01C | | ITO-0(208)T | ____ OF ____

6/16/2016 P:\60306196\900-Work\910-CAD\006_Civil\Sheets\WB-IR30W_signsummary_01.dgn

Plan Sheet No.	Sign Number	MOAS Sign Code	Work						Offset (ft)	Mounting Height	Background Color	Panel							Ground Mounted			Stringer			Overhead		Remarks
			New	Existing															Foundations	Post		New Slipbases	Type	Total Length (ft)	Structure Type	No. of Lights	
				Replace Panel	Relocate Panel	Modify Legend	Remove	To Remain				Legend	Width (in)	Height (in)	Area (sq ft)	Type	Sheeting Type	Bid Item Number		Type	Total Length (ft)						
	N-MP23.9	W11-4	×				×		12	7	YL	Cattle Crossing Symbol	30	30	6	RWM		6080005	1	2 1/2S	11						
	N-MP23.8	R2-1	×				×		12	7	WH	SPEED LIMIT 45	24	30	5	RWM		6080005	1	2 1/2S	12						
	N-MP23.7	W1-2R	×				×		12	7	YL	Right Curve Symbol	30	30	6	RWM		6080005	1	2 1/2S	11						
	N-MP23.6	Warning						×				SLOW/CHILDREN															
	N-MP23.5	W1-2L	×				×		12	7	YL	Left Curve Symbol	30	30	6	RWM		6080005	1	2 1/2S	11						
	N-MP23.1A	OM-3(1)R	×				×				YL	Type 3(1) R						7030080									
	N-MP23.1B	OM-3(1)L	×				×				YL	Type 3(1) L						7030080									
	N-MP22.5	W1-2L	×						12	7	YL	Left Curve Symbol	30	30	6	RWM		6080005	1	2 1/2S	11						
	N-MP19.2	W1-2R	×						12	7	YL	Right Curve Symbol	30	30	6	RWM		6080005	1	2 1/2S	11						
	N-MP18.9	W1-5R	×				×		12	7	YL	Right Winding Road Symbol	30	30	6	RWM		6080005	1	2 1/2S	11						
	N-MP18.6A	OM-3(1)R	×				×				YL	Type 3(1) R						7030080									
	N-MP18.6B	OM-3(1)L	×				×				YL	Type 3(1) L						7030080									
	N-MP18.2A	OM-3(1)R	×				×				YL	Type 3(1) R						7030080									
	N-MP18.2B	OM-3(1)L	×				×				YL	Type 3(1) L						7030080									
	N-MP18.1	W1-5R	×				×		12	7	YL	Right Winding Road Symbol	30	30	6	RWM		6080005	1	2 1/2S	11						
	N-MP17.3	W1-2R	×				×		12	7	YL	Right Curve Symbol	30	30	6	RWM		6080005	1	2 1/2S	11						
	N-MP17.2	R2-1	×				×		12	7	WH	SPEED LIMIT 45	24	30	5	RWM		6080005	1	2 1/2S	12						
	N-MP16.8	W1-2L	×				×		12	7	YL	Left Curve Symbol	30	30	6	RWM		6080005	1	2 1/2S	11						
	N-MP16.3	W1-2L	×				×		12	7	YL	Left Curve Symbol	30	30	6	RWM		6080005	1	2 1/2S	11						
	N-MP16.2A	OM-3(1)R	×				×				YL	Type 3(1) R						7030080									
	N-MP16.2B	OM-3(1)L	×				×				YL	Type 3(1) L						7030080									
	N-MP16.2	W3-5aAZ	×				×		12	7	YL	SPEED REDUCED AHEAD	36	36	9	RWM		6080005	2	2 1/2S	27	2					
	N-MP16.1	W1-2L	×				×		12	7	YL	Left Curve Symbol	30	30	6	RWM		6080005	1	2 1/2S	11						
	N-MP16.0	W11-2	×				×		12	7	YL	Pedestrian Crossing Symbol	30	30	6	RWM		6080005	1	2 1/2S	14						
	+	W13-1P	×								YL	10 M.P.H.	18	18	2	RWM		6080005									
	N-MP16.0	W8-3	×				×		12	7	YL	PAVEMENT ENDS	36	36	9	RWM		6080005	2	2 1/2S	27	2					

F.H.W.A. REGION	STATE	PROJECT NO.	SHEET NO.	TOTAL SHEETS	RECORD DRAWINGS
9	ARIZ.	ITO-0(208)T	49	65	

0000 PM ITO

DATE | MADE BY | DESCRIPTION OF REVISION

NO.2

DATE | MADE BY

NO.1 DESCRIPTION OF REVISION

Notes:
1. The Contractor shall verify post lengths and elevations.
2. The Engineer may shift a sign in order to achieve a more desirable location.
3. Quantities are approximate and for the Contractor's information only.
4. Offsets are measured from white edge line to edge of sign panel closest to roadway. Where there is no white edge line, measurement shall be taken from face of curb.

Panel Types:
RWM: Regulatory, Warning, or Marker
F-DA: Flat-sheet aluminum with direct applied characters
FYP: Fluorescent Yellow Prismatic
EXT: Extruded Aluminum

Stringer Types:
P: Perforated square-tube post
T: T-section support

Structure Types:
TT: Tapered tube, single beam

Post Types:
2S: 2" Single Perforated
2 1/2S: 2 1/2" Single Perforated
2 1/2T: 2 1/2" Telescoping

	NAME	DATE
DESIGN	AE	06-16
DRAWN	AE	06-16
CHECKED	KEB	06-16

TRANSPORTATION
AECOM TECHNICAL SERVICES, Inc.
7720 North 16th Street, Suite 100
Phoenix, Arizona 85020
T 602.371.1100
AECOM
www.aecom.com

ARIZONA DEPARTMENT OF TRANSPORTATION
INFRASTRUCTURE DELIVERY AND OPERATIONS DIVISION
TRAFFIC DESIGN SERVICES

SIGN SUMMARY
NB-IRR 30 (SEGMENT 2)

Registered Professional Engineer
C. E.
45815
KATE E. BONDY
Date Signed 6/15/2016
ARIZONA, U.S.A.
Expires 3/31/2018

LOCATION
TOHONO O'ODHAM NATION VARIOUS LOCATIONS

DWG NO. T-3.36

TRACS NO. SH643 01C | | ITO-0(208)T | ____ OF ____

6/16/2016 P:¢60306196¢900-Work¢910-CAD¢006_Civil¢Sheets¢NB-IR30E_signsummary_01.dgn

Plan Sheet No.	Sign Number	MOAS Sign Code	Work: New	Work: Existing: Replace Panel	Work: Existing: Relocate Panel	Work: Existing: Modify Legend	Work: Existing: Remove	Work: Existing: To Remain	Offset (ft)	Mounting Height	Background Color	Panel: Legend	Panel: Width (in)	Panel: Height (in)	Panel: Area (sq ft)	Panel: Type	Panel: Sheeting Type	Panel: Bid Item Number	Ground Mounted: Foundations	Ground Mounted: Post: Type	Ground Mounted: Post: Total Length (ft)	Stringer: New Slipbases	Stringer: Type	Stringer: Total Length (ft)	Overhead: Structure Type	Overhead: No. of Lights	Remarks
	S-MP15.92	M1-10a	×				×		12	7	BL	INDIAN 30	24	24	4	RWM		6080005	1	2S	11						
	S-MP15.97	W1-2R	×				×		12	7	YL	Right Curve Symbol	30	30	6	RWM		6080005	1	2 1/2S	11						
	S-MP16	D10-2AZ	×				×		12		GR	MILE 16						7030095									
	+	D10-2AZ	×								GR	MILE 16						7030095									Mount Sign Panel Back to Back
	S-MP16.2A	OM-3(1)R	×				×				YL	Type 3(1) R						7030080									
	S-MP16.2B	OM-3(1)L	×				×				YL	Type 3(1) L						7030080									
	S-MP16.5	W1-2R	×				×		12	7	YL	Right Curve Symbol	30	30	6	RWM		6080005	1	2 1/2S	11						
	S-MP16.9	W1-2L	×				×		12	7	YL	Left Curve Symbol	30	30	6	RWM		6080005	1	2 1/2S	11						
	S-MP17	D10-2AZ	×				×		12		GR	MILE 17						7030095									
	+	D10-2AZ	×								GR	MILE 17						7030095									Mount Sign Panel Back to Back
	S-MP17.2	R2-1	×				×		12	7	WH	SPEED LIMIT 45	24	30	5	RWM		6080005	1	2 1/2S	12						
	S-MP17.6	W1-5R	×				×		12	7	YL	Right Winding Road Symbol	30	30	6	RWM		6080005	1	2 1/2S	11						
	S-MP18	D10-2AZ	×				×		12		GR	MILE 18						7030095									
	+	D10-2AZ	×								GR	MILE 18						7030095									Mount Sign Panel Back to Back
	S-MP18.2A	OM-3(1)R	×				×				YL	Type 3(1) R						7030080									
	S-MP18.2B	OM-3(1)L	×				×				YL	Type 3(1) L						7030080									
	S-MP18.3	W1-5R	×				×		12	7	YL	Right Winding Road Symbol	30	30	6	RWM		6080005	1	2 1/2S	11						
	S-MP18.6A	OM-3(1)R	×				×				YL	Type 3(1) R						7030080									
	S-MP18.6B	OM-3(1)L	×				×				YL	Type 3(1) L						7030080									
	S-MP18.9	W1-2L	×						12	7	YL	Left Curve Symbol	30	30	6	RWM		6080005	1	2 1/2S	11						
	S-MP19	D10-2AZ	×				×		12		GR	MILE 19						7030095									
	+	D10-2AZ	×								GR	MILE 19						7030095									Mount Sign Panel Back to Back
	S-MP20	D10-2AZ	×				×		12		GR	MILE 20						7030095									
	+	D10-2AZ	×								GR	MILE 20						7030095									Mount Sign Panel Back to Back

F.H.W.A. REGION	STATE	PROJECT NO.	SHEET NO.	TOTAL SHEETS	RECORD DRAWINGS
9	ARIZ.	ITO-0(208)T	50	65	

0000 PM ITO

Notes:
1. The Contractor shall verify post lengths and elevations.
2. The Engineer may shift a sign in order to achieve a more desirable location.
3. Quantities are approximate and for the Contractor's information only.
4. Offsets are measured from white edge line to edge of sign panel closest to roadway. Where there is no white edge line, measurement shall be taken from face of curb.

Panel Types:
RWM: Regulatory, Warning, or Marker
F-DA: Flat-sheet aluminum with direct applied characters
FYP: Fluorescent Yellow Prismatic
EXT: Extruded Aluminum

Stringer Types:
P: Perforated square-tube post
T: T-section support

Structure Types:
TT: Tapered tube, single beam

Post Types:
2S: 2" Single Perforated
2 1/2S: 2 1/2" Single Perforated
2 1/2T: 2 1/2" Telescoping

	NAME	DATE
DESIGN	AE	06-16
DRAWN	AE	06-16
CHECKED	KEB	06-16

TRANSPORTATION
AECOM TECHNICAL SERVICES, Inc.
7720 North 16th Street, Suite 100
Phoenix, Arizona 85020
T 602.371.1100
AECOM
www.aecom.com

ARIZONA DEPARTMENT OF TRANSPORTATION
INFRASTRUCTURE DELIVERY AND OPERATIONS DIVISION
TRAFFIC DESIGN SERVICES

SIGN SUMMARY
SB-IRR 30 (SEGMENT 2)

Registered Professional Engineer
CERTIFICATE NO.
45815
KATE E. BONDY
ARIZONA, U.S.A.
Date Signed 6/16/2016
Expires 3/31/2018

LOCATION
TOHONO O'ODHAM NATION VARIOUS LOCATIONS

DWG NO. T-3.37

TRACS NO. SH643 01C | ITO-0(208)T | ____ OF ____

6/16/2016 P:\60306196\900-Work\910-CAD\006_Civil\Sheets\SB-IR30E_signsummary_01.dgn

NO.1 DESCRIPTION OF REVISION | NO.2 DESCRIPTION OF REVISION | MADE BY | DATE

Plan Sheet No.	Sign Number	MOAS Sign Code	Work						Offset (ft)	Mounting Height	Background Color	Panel							Ground Mounted			Stringer		Overhead		Remarks
			New	Existing								Legend	Width (in)	Height (in)	Area (sq ft)	Type	Sheeting Type	Bid Item Number	Foundations	Post Type	Post Total Length (ft)	New Slipbases	Type	Total Length (ft)	Structure Type	No. of Lights	
				Replace Panel	Relocate Panel	Modify Legend	Remove	To Remain																		
	S-MP21	D10-2AZ	×				×		12		GR	MILE 21						7030095								
	+	D10-2AZ	×								GR	MILE 21						7030095								Mount Sign Panel Back to Back
	S-MP22	D10-2AZ	×				×		12		GR	MILE 22						7030095								
	+	D10-2AZ	×								GR	MILE 22						7030095								Mount Sign Panel Back to Back
	S-MP22.4	W1-2R	×						12	7	YL	Right Curve Symbol	30	30	6	RWM		6080005	1	2 1/2S	11					
	S-MP22.8	Warning						×				SLOW/CHILDREN														
	S-MP23	D10-2AZ	×				×		12		GR	MILE 23						7030095								
	+	D10-2AZ	×								GR	MILE 23						7030095								Mount Sign Panel Back to Back
	S-MP23.1A	OM-3(1)R	×				×				YL	Type 3(1) R						7030080								
	S-MP23.1B	OM-3(1)L	×				×				YL	Type 3(1) L						7030080								
	S-MP23.5	W1-2R	×						12	7	YL	Right Curve Symbol	30	30	6	RWM		6080005	1	2 1/2S	11					
	S-MP23.6	W1-2L	×				×		12	7	YL	Left Curve Symbol	30	30	6	RWM		6080005	1	2 1/2S	11					
	S-MP23.9	W3-1	×				×		12	7	YL	STOP AHEAD	36	36	9	RWM		6080005	2	2 1/2S	27	2				
	S-MP24	D10-2AZ	×				×		12		GR	MILE 24						7030095								
	+	D10-2AZ	×								GR	MILE 24						7030095								Mount Sign Panel Back to Back

F.H.W.A. REGION	STATE	PROJECT NO.	SHEET NO.	TOTAL SHEETS	RECORD DRAWINGS
9	ARIZ.	ITO-0(208)T	51	65	

0000 PM ITO

Notes:
1. The Contractor shall verify post lengths and elevations.
2. The Engineer may shift a sign in order to achieve a more desirable location.
3. Quantities are approximate and for the Contractor's information only.
4. Offsets are measured from white edge line to edge of sign panel closest to roadway. Where there is no white edge line, measurement shall be taken from face of curb.

Panel Types:
- RWM: Regulatory, Warning, or Marker
- F-DA: Flat-sheet aluminum with direct applied characters
- FYP: Fluorescent Yellow Prismatic
- EXT: Extruded Aluminum

Stringer Types:
- P: Perforated square-tube post
- T: T-section support

Structure Types:
- TT: Tapered tube, single beam

Post Types:
- 2S: 2" Single Perforated
- 2 1/2S: 2 1/2" Single Perforated
- 2 1/2T: 2 1/2" Telescoping

	NAME	DATE
DESIGN	AE	06-16
DRAWN	AE	06-16
CHECKED	KEB	06-16

TRANSPORTATION
AECOM TECHNICAL SERVICES, Inc.
7720 North 16th Street, Suite 100
Phoenix, Arizona 85020
T 602.371.1100
AECOM
www.aecom.com

ARIZONA DEPARTMENT OF TRANSPORTATION
INFRASTRUCTURE DELIVERY AND OPERATIONS DIVISION
TRAFFIC DESIGN SERVICES

SIGN SUMMARY
SB-IRR 30 (SEGMENT 2)

Registered Professional Engineer
C. E.
45815
KATE E. BONDY
Date Signed 6/15/2016
ARIZONA, U.S.A.
Expires 3/31/2018

LOCATION
TOHONO O'ODHAM NATION VARIOUS LOCATIONS

DWG NO. T-3.38

TRACS NO. SH643 01C | ITO-0(208)T | ____ OF ____

6/16/2016 P:\60306196\900-Work\910-CAD\006_Civil\Sheets\SB-IR30E_signsummary_02.dgn

NO.1 DESCRIPTION OF REVISION | MADE BY | DATE | NO.2 DESCRIPTION OF REVISION | MADE BY | DATE

Plan Sheet No.	Sign Number	MOAS Sign Code	Work						Offset (ft)	Mounting Height	Background Color	Panel							Ground Mounted			Stringer			Overhead		Remarks
				Existing																Post								
			New	Replace Panel	Relocate Panel	Modify Legend	Remove	To Remain				Legend	Width (in)	Height (in)	Area (sq ft)	Type	Sheeting Type	Bid Item Number	Foundations	Type	Total Length (ft)	New Slipbases	Type	Total Length (ft)	Structure Type	No. of Lights	
	N-MP0.1	M1-10a	×				×		12	7	BL	INDIAN 35	24	24	4	RWM		6080005	1	2S	11						
	N-MP0.3	R2-1	×				×		12	7	WH	SPEED LIMIT 55	24	30	5	RWM		6080005	1	2 1/2S	12						
	N-MP0.41	W8-18aAZ	×				×		12	7	YL	FLASH FLOOD AREA	36	36	9	RWM		6080005	2	2 1/2S	27	2					
	N-MP0.42	W8-19	×								YL	Depth Gage	12	72	6	RWM		6080005	1	2S	7						
	N-MP1	D10-1AZ	×				×		12		GR	MILE 1						7030095									
	+	D10-1AZ	×								GR	MILE 1						7030095									Mount Sign Panel Back to Back
	N-MP2	D10-1AZ	×				×		12		GR	MILE 2						7030095									
	+	D10-1AZ	×								GR	MILE 2						7030095									Mount Sign Panel Back to Back
	N-MP3	D10-1AZ	×				×		12		GR	MILE 3						7030095									
	+	D10-1AZ	×								GR	MILE 3						7030095									Mount Sign Panel Back to Back
	N-MP3.9	W8-2	×						12	7	YL	DIP	30	30	6	RWM		6080005	1	2 1/2S	11						
	N-MP4	D10-1AZ	×				×		12		GR	MILE 4						7030095									
	+	D10-1AZ	×								GR	MILE 4						7030095									Mount Sign Panel Back to Back
	N-MP5	D10-1AZ	×				×		12		GR	MILE 5						7030095									
	+	D10-1AZ	×								GR	MILE 5						7030095									Mount Sign Panel Back to Back
	N-MP6	D10-1AZ	×				×		12		GR	MILE 6						7030095									
	+	D10-1AZ	×								GR	MILE 6						7030095									Mount Sign Panel Back to Back
	N-MP7	D10-1AZ	×				×		12		GR	MILE 7						7030095									
	+	D10-1AZ	×								GR	MILE 7						7030095									Mount Sign Panel Back to Back
	N-MP7.05	W3-5aAZ	×				×		12	7	YL	SPEED REDUCED AHEAD	36	36	9	RWM		6080005	2	2 1/2S	27	2					
	N-MP7.1	W8-2	×						12	7	YL	DIP	30	30	6	RWM		6080005	1	2 1/2S	11						
	N-MP7.2	R2-1	×				×		12	7	WH	SPEED LIMIT 45	24	30	5	RWM		6080005	1	2 1/2S	12						
	N-MP7.3	R2-1	×				×		12	7	WH	SPEED LIMIT 35	24	30	5	RWM		6080005	1	2 1/2S	12						
	N-MP7.4	W14-3AZ	×				×		12	7	YL	NO PASSING ZONE	48	36	6	RWM		6080005	2	2 1/2S	25	2					
	N-MP7.6	S1-1	×				×		12	7	YL	School Crossing Symbol	36	36	9	RWM		6080005	2	2 1/2S	27	2					
	N-MP7.9	R1-1	×				×		12	7	RD	STOP	30	30	6	RWM		6080005	1	2 1/2S	12						Side Road
	N-MP8	D10-1AZ	×				×		12		GR	MILE 8						7030095									
	+	D10-1AZ	×								GR	MILE 8						7030095									Mount Sign Panel Back to Back
	N-MP8.5	W2-2R	×				×		12	7	YL	Right Side Road Symbol	30	30	6	RWM		6080005	1	2 1/2S	11						

F.H.W.A. REGION	STATE	PROJECT NO.	SHEET NO.	TOTAL SHEETS	RECORD DRAWINGS
9	ARIZ.	IT0-0(208)T	52	65	

0000 PM IT0

Notes:
1. The Contractor shall verify post lengths and elevations.
2. The Engineer may shift a sign in order to achieve a more desirable location.
3. Quantities are approximate and for the Contractor's information only.
4. Offsets are measured from white edge line to edge of sign panel closest to roadway. Where there is no white edge line, measurement shall be taken from face of curb.

Panel Types:
RWM: Regulatory, Warning, or Marker
F-DA: Flat-sheet aluminum with direct applied characters
FYP: Fluorescent Yellow Prismatic
EXT: Extruded Aluminum

Stringer Types:
P: Perforated square-tube post
T: T-section support

Structure Types:
TT: Tapered tube, single beam

Post Types:
2S: 2" Single Perforated
2 1/2S: 2 1/2" Single Perforated
2 1/2T: 2 1/2" Telescoping

	NAME	DATE
DESIGN	AE	06-16
DRAWN	AE	06-16
CHECKED	KEB	06-16

TRANSPORTATION
AECOM TECHNICAL SERVICES, Inc.
7720 North 16th Street, Suite 100
Phoenix, Arizona 85020
T 602.371.1100
AECOM
www.aecom.com

ARIZONA DEPARTMENT OF TRANSPORTATION
INFRASTRUCTURE DELIVERY AND OPERATIONS DIVISION
TRAFFIC DESIGN SERVICES

SIGN SUMMARY
NB-IRR 35

Registered Professional Engineer
CERTIFICATE NO.
45815
KATE E. BONDY
Date Signed 6/15/2016
ARIZONA, U.S.A.
Expires 3/31/2018

LOCATION
TOHONO O'ODHAM NATION VARIOUS LOCATIONS

DWG NO. T-3.39

TRACS NO. SH643 01C | | IT0-0(208)T | ____ OF ____

6/16/2016 P:¢60306196¢900-Work¢910-CAD¢006_Civil¢Sheets¢NB-IR35_signsummary_01.dgn

NO.1 DESCRIPTION OF REVISION | DATE | MADE BY
NO.2 DESCRIPTION OF REVISION | DATE | MADE BY

Plan Sheet No.	Sign Number	MOAS Sign Code	Work						Offset (ft)	Mounting Height	Background Color	Panel							Ground Mounted			Stringer			Overhead		Remarks
			New	Existing								Legend	Width (in)	Height (in)	Area (sq ft)	Type	Sheeting Type	Bid Item Number	Foundations	Post Type	Post Total Length (ft)	New Slipbases	Type	Total Length (ft)	Structure Type	No. of Lights	
				Replace Panel	Relocate Panel	Modify Legend	Remove	To Remain																			
	N-MP8.6	W14-3AZ	×				×		12	7	YL	NO PASSING ZONE	48	36	6	RWM		6080005	2	2 1/2S	25	2					
	N-MP8.8	M1-10a	×				×		12	7	BL	INDIAN 35	24	24	4	RWM		6080005	1	2S	11						
	N-MP8.9	R2-1	×				×		12	7	WH	SPEED LIMIT 55	24	30	5	RWM		6080005	1	2 1/2S	12						
	N-MP9	D10-1AZ	×				×		12		GR	MILE 9						7030095									
	+	D10-1AZ	×								GR	MILE 9						7030095									Mount Sign Panel Back to Back
	N-MP10	D10-2AZ	×				×		12		GR	MILE 10						7030095									
	+	D10-2AZ	×								GR	MILE 10						7030095									Mount Sign Panel Back to Back
	N-MP10.5	W14-3AZ	×				×		12	7	YL	NO PASSING ZONE	48	36	6	RWM		6080005	2	2 1/2S	25	2					
	N-MP10.6	W1-4L	×						12	7	YL	Left Reverse Curve Symbol	30	30	6	RWM		6080005	1	2 1/2S	11						
	N-MP11	D10-2AZ	×				×		12		GR	MILE 11						7030095									
	+	D10-2AZ	×								GR	MILE 11						7030095									Mount Sign Panel Back to Back
	N-MP11.5	W14-3AZ	×				×		12	7	YL	NO PASSING ZONE	48	36	6	RWM		6080005	2	2 1/2S	25	2					
	N-MP12	D10-2AZ	×				×		12		GR	MILE 12						7030095									
	+	D10-2AZ	×								GR	MILE 12						7030095									Mount Sign Panel Back to Back
	N-MP13	D10-2AZ	×				×		12		GR	MILE 13						7030095									
	+	D10-2AZ	×								GR	MILE 13						7030095									Mount Sign Panel Back to Back
	N-MP13.9	W11-4	×				×		12	7	YL	Cattle Crossing Symbol	30	30	6	RWM		6080005	1	2 1/2S	11						
	N-MP14	D10-2AZ	×				×		12		GR	MILE 14						7030095									
	+	D10-2AZ	×								GR	MILE 14						7030095									Mount Sign Panel Back to Back
	N-MP15	D10-2AZ	×				×		12		GR	MILE 15						7030095									
	+	D10-2AZ	×								GR	MILE 15						7030095									Mount Sign Panel Back to Back
	N-MP16	D10-2AZ	×				×		12		GR	MILE 16						7030095									
	+	D10-2AZ	×								GR	MILE 16						7030095									Mount Sign Panel Back to Back
	N-MP17	D10-2AZ	×				×		12		GR	MILE 17						7030095									
	+	D10-2AZ	×								GR	MILE 17						7030095									Mount Sign Panel Back to Back
	N-MP17.5	W8-2	×						12	7	YL	DIP	30	30	6	RWM		6080005	1	2 1/2S	11						
	N-MP18	D10-2AZ	×				×		12		GR	MILE 18						7030095									
	+	D10-2AZ	×								GR	MILE 18						7030095									Mount Sign Panel Back to Back
	N-MP18.8	W8-3	×				×		12	7	YL	PAVEMENT ENDS	36	36	9	RWM		6080005	2	2 1/2S	27	2					

F.H.W.A. REGION	STATE	PROJECT NO.	SHEET NO.	TOTAL SHEETS	RECORD DRAWINGS
9	ARIZ.	ITO-0(208)T	53	65	

0000 PM ITO

Notes:
1. The Contractor shall verify post lengths and elevations.
2. The Engineer may shift a sign in order to achieve a more desirable location.
3. Quantities are approximate and for the Contractor's information only.
4. Offsets are measured from white edge line to edge of sign panel closest to roadway. Where there is no white edge line, measurement shall be taken from face of curb.

Panel Types:
RWM: Regulatory, Warning, or Marker
F-DA: Flat-sheet aluminum with direct applied characters
FYP: Fluorescent Yellow Prismatic
EXT: Extruded Aluminum

Stringer Types:
P: Perforated square-tube post
T: T-section support

Structure Types:
TT: Tapered tube, single beam

Post Types:
2S: 2" Single Perforated
2 1/2S: 2 1/2" Single Perforated
2 1/2T: 2 1/2" Telescoping

	NAME	DATE
DESIGN	AE	06-16
DRAWN	AE	06-16
CHECKED	KEB	06-16

TRANSPORTATION
AECOM TECHNICAL SERVICES, Inc.
7720 North 16th Street, Suite 100
Phoenix, Arizona 85020
T 602.371.1100
AECOM
www.aecom.com

ARIZONA DEPARTMENT OF TRANSPORTATION
INFRASTRUCTURE DELIVERY AND OPERATIONS DIVISION
TRAFFIC DESIGN SERVICES

SIGN SUMMARY
NB-IRR 35

LOCATION
TOHONO O'ODHAM NATION VARIOUS LOCATIONS

Registered Professional Engineer
45815
KATE E. BONDY
Date Signed 6/15/2016
ARIZONA, U.S.A.
Expires 3/31/2018

DWG NO. T-3.40

TRACS NO. SH643 01C | ITO-0(208)T | ____ OF ____

6/16/2016 P:\60306196\900-Work\910-CAD\006_Civil\Sheets\NB-IR35_signsummary_02.dgn

NO.1 DESCRIPTION OF REVISION MADE BY DATE
NO.2 DESCRIPTION OF REVISION MADE BY DATE

Plan Sheet No.	Sign Number	MOAS Sign Code	Work: New	Work: Existing: Replace Panel	Work: Existing: Relocate Panel	Work: Existing: Modify Legend	Work: Existing: Remove	Work: Existing: To Remain	Offset (ft)	Mounting Height	Background Color	Panel: Legend	Panel: Width (in)	Panel: Height (in)	Panel: Area (sq ft)	Panel: Type	Panel: Sheeting Type	Panel: Bid Item Number	Ground Mounted: Foundations	Ground Mounted: Post: Type	Ground Mounted: Post: Total Length (ft)	Ground Mounted: New Slipbases	Stringer: Type	Stringer: Total Length (ft)	Overhead: Structure Type	Overhead: No. of Lights	Remarks
	S-MP17.7	M1-10a	×				×		12	7	BL	INDIAN 35	24	24	4	RWM		6080005	1	2S	11						
	S-MP17.6	R2-1	×				×		12	7	WH	SPEED LIMIT 55	24	30	5	RWM		6080005	1	2 1/2S	12						
	S-MP17.4	W8-2	×						12	7	YL	DIP	30	30	6	RWM		6080005	1	2 1/2S	11						
	S-MP12.0	W1-2R	×						12	7	YL	Right Curve Symbol	30	30	6	RWM		6080005	1	2 1/2S	11						
	S-MP11.7	W14-3AZ	×				×		12	7	YL	NO PASSING ZONE	48	36	6	RWM		6080005	2	2 1/2S	25	2					
	S-MP11.0	W1-4R	×						12	7	YL	Right Reverse Curve Symbol	30	30	6	RWM		6080005	1	2 1/2S	11						
	S-MP10.5	W14-3AZ	×				×		12	7	YL	NO PASSING ZONE	48	36	6	RWM		6080005	2	2 1/2S	25	2					
	S-MP8.9	W2-4	×				×		12	7	YL	T (Intersection) Symbol	30	30	6	RWM		6080005	1	2 1/2S	11						
	S-MP8.8	W14-3AZ	×				×		12	7	YL	NO PASSING ZONE	48	36	6	RWM		6080005	2	2 1/2S	25	2					
	S-MP8.7	W3-1	×				×		12	7	YL	Stop Ahead Symbol	30	30	6	RWM		6080005	1	2 1/2S	11						
	S-MP8.6	R1-1	×				×		12	7	RD	STOP	30	30	6	RWM		6080005	1	2 1/2S	12						Side Road
	S-MP8.5	M1-10a	×				×		12	7	BL	INDIAN 35	24	24	4	RWM		6080005	1	2S	11						
	S-MP8.3	W3-5aAZ	×				×		12	7	YL	SPEED REDUCED AHEAD	36	36	9	RWM		6080005	2	2 1/2S	27	2					
	S-MP8.2	R2-1	×				×		12	7	WH	SPEED LIMIT 45	24	30	5	RWM		6080005	1	2 1/2S	12						
	S-MP8.0	R2-1	×				×		12	7	WH	SPEED LIMIT 35	24	30	5	RWM		6080005	1	2 1/2S	12						
	S-MP7.8	W14-3AZ	×				×		12	7	YL	NO PASSING ZONE	48	36	6	RWM		6080005	2	2 1/2S	25	2					
	S-MP7.3	W11-4	×				×		12	7	YL	Cattle Crossing Symbol	30	30	6	RWM		6080005	1	2 1/2S	11						
	S-MP7.1	W8-2	×						12	7	YL	DIP	30	30	6	RWM		6080005	1	2 1/2S	11						
	S-MP7.0	R2-1	×				×		12	7	WH	SPEED LIMIT 55	24	30	5	RWM		6080005	1	2 1/2S	12						
	S-MP6.0	W8-2	×						12	7	YL	DIP	30	30	6	RWM		6080005	1	2 1/2S	11						
	S-MP2.8	W11-4	×				×		12	7	YL	Cattle Crossing Symbol	30	30	6	RWM		6080005	1	2 1/2S	11						
	S-MP0.0	R1-1	×				×		12	7	RD	STOP	30	30	6	RWM		6080005	1	2 1/2S	12						

F.H.W.A. REGION	STATE	PROJECT NO.	SHEET NO.	TOTAL SHEETS	RECORD DRAWINGS
9	ARIZ.	ITO-0(208)T	54	65	

0000 PM ITO

Notes:
1. The Contractor shall verify post lengths and elevations.
2. The Engineer may shift a sign in order to achieve a more desirable location.
3. Quantities are approximate and for the Contractor's information only.
4. Offsets are measured from white edge line to edge of sign panel closest to roadway. Where there is no white edge line, measurement shall be taken from face of curb.

Panel Types:
- RWM: Regulatory, Warning, or Marker
- F-DA: Flat-sheet aluminum with direct applied characters
- FYP: Fluorescent Yellow Prismatic
- EXT: Extruded Aluminum

Stringer Types:
- P: Perforated square-tube post
- T: T-section support

Structure Types:
- TT: Tapered tube, single beam

Post Types:
- 2S: 2" Single Perforated
- 2 1/2S: 2 1/2" Single Perforated
- 2 1/2T: 2 1/2" Telescoping

	NAME	DATE
DESIGN	AE	06-16
DRAWN	AE	06-16
CHECKED	KEB	06-16

TRANSPORTATION
AECOM TECHNICAL SERVICES, Inc.
7720 North 16th Street, Suite 100
Phoenix, Arizona 85020
T 602.371.1100
AECOM
www.aecom.com

ARIZONA DEPARTMENT OF TRANSPORTATION
INFRASTRUCTURE DELIVERY AND OPERATIONS DIVISION
TRAFFIC DESIGN SERVICES

SIGN SUMMARY
SB-IRR 35

Registered Professional Engineer
CERTIFICATE NO.
45815
KATE E. BONDY
Date Signed 6/15/2016
ARIZONA, U.S.A.
Expires 3/31/2018

LOCATION
TOHONO O'ODHAM NATION VARIOUS LOCATIONS

DWG NO. T-3.41

TRACS NO. SH643 01C | ITO-0(208)T | ____ OF ____

6/16/2016 P:¢60306196¢900-Work¢910-CAD¢006_Civil¢Sheets¢SB-IR35_signsummary_01.dgn

NO.1 DESCRIPTION OF REVISION | MADE BY | DATE
NO.2 DESCRIPTION OF REVISION | MADE BY | DATE

Plan Sheet No.	Sign Number	MOAS Sign Code	Work						Offset (ft)	Mounting Height	Background Color	Panel							Ground Mounted			Stringer			Overhead		Remarks
				Existing																Post								
			New	Replace Panel	Relocate Panel	Modify Legend	Remove	To Remain				Legend	Width (in)	Height (in)	Area (sq ft)	Type	Sheeting Type	Bid Item Number	Foundations	Type	Total Length (ft)	New Slipbases	Type	Total Length (ft)	Structure Type	No. of Lights	
	N-MP0.1	M1-10A	×				×		12	7	BL	INDIAN 42	24	24	4	RWM		6080005	1	2S	11						
	N-MP0.2	R2-1	×				×		12	7	WH	SPEED LIMIT 55	24	30	5	RWM		6080005	1	2 1/2S	12						
	N-MP0.5	W14-3AZ	×				×		12	7	YL	NO PASSING ZONE	48	36	6	RWM		6080005	2	2 1/2S	25	2					
	N-MP0.7	W8-2	×				×		12	7	YL	DIP	30	30	6	RWM		6080005	1	2 1/2S	11						
	N-MP0.8	OM-3(1)R	×				×				YL	Type 3(1) R						7030080									
	N-MP1	D10-1AZ	×				×		12		GR	MILE 1						7030095									
	+	D10-1AZ	×								GR	MILE 1						7030095									Mount Sign Panel Back to Back
	N-MP1.2	W14-3AZ	×				×		12	7	YL	NO PASSING ZONE	48	36	6	RWM		6080005	2	2 1/2S	25	2					
	N-MP1.5	W11-4	×				×		12	7	YL	Cattle Crossing Symbol	30	30	6	RWM		6080005	1	2 1/2S	11						
	N-MP2	D10-1AZ	×				×		12		GR	MILE 2						7030095									
	+	D10-1AZ	×								GR	MILE 2						7030095									Mount Sign Panel Back to Back
	N-MP2.2	W14-3AZ	×				×		12	7	YL	NO PASSING ZONE	48	36	6	RWM		6080005	2	2 1/2S	25	2					
	N-MP3	D10-1AZ	×				×		12		GR	MILE 3						7030095									
	+	D10-1AZ	×								GR	MILE 3						7030095									Mount Sign Panel Back to Back
	N-MP4	D10-1AZ	×				×		12		GR	MILE 4						7030095									
	+	D10-1AZ	×								GR	MILE 4						7030095									Mount Sign Panel Back to Back
	N-MP5	D10-1AZ	×				×		12		GR	MILE 5						7030095									
	+	D10-1AZ	×								GR	MILE 5						7030095									Mount Sign Panel Back to Back
	N-MP5.0A	W1-2R	×				×		12	7	YL	Right Curve Symbol	30	30	6	RWM		6080005	1	2 1/2S	14						
	+	W13-1P	×								YL	45 M.P.H.	18	18	2	RWM		6080005									
	N-MP5.0B	W14-3AZ	×				×		12	7	YL	NO PASSING ZONE	48	36	6	RWM		6080005	2	2 1/2S	25	2					
	N-MP5.4	OM-3(1)R	×				×				YL	Type 3(1) R						7030080									
	N-MP5.5	OM-3(1)R	×				×				YL	Type 3(1) R						7030080									
	N-MP5.6	OM-3(1)R	×				×				YL	Type 3(1) R						7030080									
	N-MP5.65	OM-3(1)R	×				×				YL	Type 3(1) R						7030080									
	N-MP5.7	OM-3(1)R	×				×				YL	Type 3(1) R						7030080									
	N-MP5.8	OM-3(1)R	×				×				YL	Type 3(1) R						7030080									
	N-MP6	D10-1AZ	×				×		12		GR	MILE 6						7030095									
	+	D10-1AZ	×								GR	MILE 6						7030095									Mount Sign Panel Back to Back

F.H.W.A. REGION	STATE	PROJECT NO.	SHEET NO.	TOTAL SHEETS	RECORD DRAWINGS
9	ARIZ.	ITO-0(208)T	55	65	

0000 PM ITO

Notes:
1. The Contractor shall verify post lengths and elevations.
2. The Engineer may shift a sign in order to achieve a more desirable location.
3. Quantities are approximate and for the Contractor's information only.
4. Offsets are measured from white edge line to edge of sign panel closest to roadway. Where there is no white edge line, measurement shall be taken from face of curb.

Panel Types:
- RWM: Regulatory, Warning, or Marker
- F-DA: Flat-sheet aluminum with direct applied characters
- FYP: Fluorescent Yellow Prismatic
- EXT: Extruded Aluminum

Stringer Types:
- P: Perforated square-tube post
- T: T-section support

Structure Types:
- TT: Tapered tube, single beam

Post Types:
- 2S: 2" Single Perforated
- 2 1/2S: 2 1/2" Single Perforated
- 2 1/2T: 2 1/2" Telescoping

	NAME	DATE
DESIGN	AE	06-16
DRAWN	AE	06-16
CHECKED	KEB	06-16

TRANSPORTATION
AECOM TECHNICAL SERVICES, Inc.
7720 North 16th Street, Suite 100
Phoenix, Arizona 85020
T 602.371.1100
AECOM
www.aecom.com

ARIZONA DEPARTMENT OF TRANSPORTATION
INFRASTRUCTURE DELIVERY AND OPERATIONS DIVISION
TRAFFIC DESIGN SERVICES

SIGN SUMMARY
NB-IRR 42

LOCATION
TOHONO O'ODHAM NATION VARIOUS LOCATIONS

Registered Professional Engineer
C.V. E.
45815
KATE E. BONDY
Date Signed 6/15/2016
ARIZONA, U.S.A.
Expires 3/31/2018

DWG NO. T-3.42

TRACS NO. SH643 01C | | ITO-0(208)T | ____ OF ____

6/16/2016 P:\60306196\900-Work\910-CAD\006_Civil\Sheets\NB-IR42_signsummary_01.dgn

NO.1 DESCRIPTION OF REVISION | MADE BY | DATE
NO.2 DESCRIPTION OF REVISION | MADE BY | DATE

Plan Sheet No.	Sign Number	MOAS Sign Code	Work						Offset (ft)	Mounting Height	Background Color	Panel							Ground Mounted			Stringer		Overhead		
				Existing																Post							
			New	Replace Panel	Relocate Panel	Modify Legend	Remove	To Remain				Legend	Width (in)	Height (in)	Area (sq ft)	Type	Sheeting Type	Bid Item Number	Foundations	Type	Total Length (ft)	New Slipbases	Type	Total Length (ft)	Structure Type	No. of Lights	Remarks
	N-MP6.0	W14-3AZ	×				×		12	7	YL	NO PASSING ZONE	48	36	6	RWM		6080005	2	2 1/2S	25	2					
	N-MP6.1	W8-2	×				×		12	7	YL	DIP	30	30	6	RWM		6080005	1	2 1/2S	11						
	N-MP6.6	OM-3(1)R	×				×				YL	Type 3(1) R						7030080									
	N-MP6.7	W14-3AZ	×				×		12	7	YL	NO PASSING ZONE	48	36	6	RWM		6080005	2	2 1/2S	25	2					
	N-MP7	D10-1AZ	×				×		12		GR	MILE 7						7030095									
	+	D10-1AZ	×								GR	MILE 7						7030095									Mount Sign Panel Back to Back
	N-MP7.4	OM-3(1)R	×				×				YL	Type 3(1) R						7030080									
	N-MP7.53	W14-3AZ	×				×		12	7	YL	NO PASSING ZONE	48	36	6	RWM		6080005	2	2 1/2S	25	2					
	N-MP7.57	D1-1	×				×		12	7	GR	Kohatk (Right Arrow)	60	18	8	F-DA		6080025	2	2S	22						See Format
	N-MP7.6	R1-1	×				×		12	7	RD	STOP	30	30	6	RWM		6080005	1	2 1/2S	12						Side Road
	N-MP7.71	W8-2	×				×		12	7	YL	DIP	30	30	6	RWM		6080005	1	2 1/2S	11						
	N-MP7.72	W8-1	×				×		12	7	YL	BUMP	30	30	6	RWM		6080005	1	2 1/2S	14						
	+	W13-1P	×								YL	45 M.P.H.	18	18	2	RWM		6080005									
	N-MP7.8A	OM-3(1)L	×				×				YL	Type 3(1) L						7030080									
	N-MP7.8B	OM-3(1)R	×				×				YL	Type 3(1) R						7030080									
	N-MP8	D10-1AZ	×				×		12		GR	MILE 8						7030095									
	+	D10-1AZ	×								GR	MILE 8						7030095									Mount Sign Panel Back to Back
	N-MP8.0	OM-3(1)R	×				×				YL	Type 3(1) R						7030080									
	N-MP8.13	W11-4	×				×		12	7	YL	Cattle Crossing Symbol	30	30	6	RWM		6080005	1	2 1/2S	11						
	N-MP8.17	OM-3(1)R	×				×				YL	Type 3(1) R						7030080									
	N-MP8.23	OM-3(1)R	×				×				YL	Type 3(1) R						7030080									
	N-MP8.27	R2-1	×				×		12	7	WH	SPEED LIMIT 55	24	30	5	RWM		6080005	1	2 1/2S	12						
	N-MP8.3A	OM-3(1)L	×				×				YL	Type 3(1) L						7030080									
	N-MP8.3B	OM-3(1)R	×				×				YL	Type 3(1) R						7030080									

F.H.W.A. REGION	STATE	PROJECT NO.	SHEET NO.	TOTAL SHEETS	RECORD DRAWINGS
9	ARIZ.	ITO-0(208)T	56	65	

0000 PM ITO

Notes:
1. The Contractor shall verify post lengths and elevations.
2. The Engineer may shift a sign in order to achieve a more desirable location.
3. Quantities are approximate and for the Contractor's information only.
4. Offsets are measured from white edge line to edge of sign panel closest to roadway. Where there is no white edge line, measurement shall be taken from face of curb.

Panel Types:
- RWM: Regulatory, Warning, or Marker
- F-DA: Flat-sheet aluminum with direct applied characters
- FYP: Fluorescent Yellow Prismatic
- EXT: Extruded Aluminum

Stringer Types:
- P: Perforated square-tube post
- T: T-section support

Structure Types:
- TT: Tapered tube, single beam

Post Types:
- 2S: 2" Single Perforated
- 2 1/2S: 2 1/2" Single Perforated
- 2 1/2T: 2 1/2" Telescoping

	NAME	DATE
DESIGN	AE	06-16
DRAWN	AE	06-16
CHECKED	KEB	06-16

TRANSPORTATION
AECOM TECHNICAL SERVICES, Inc.
7720 North 16th Street, Suite 100
Phoenix, Arizona 85020
T 602.371.1100
AECOM
www.aecom.com

ARIZONA DEPARTMENT OF TRANSPORTATION
INFRASTRUCTURE DELIVERY AND OPERATIONS DIVISION
TRAFFIC DESIGN SERVICES

SIGN SUMMARY
NB-IRR 42

Registered Professional Engineer
C. E.
45815
KATE E. BONDY
Date Signed 6/16/2016
ARIZONA, U.S.A.
Expires 3/31/2018

LOCATION
TOHONO O'ODHAM NATION VARIOUS LOCATIONS

DWG NO. T-3.43

TRACS NO. SH643 01C | ITO-0(208)T | ____ OF ____

6/16/2016 P:\60306196\900-Work\910-CAD\006_Civil\Sheets\NB-IR42_signsummary_02.dgn

DATE | MADE BY | NO.2 DESCRIPTION OF REVISION | DATE | MADE BY | NO.1 DESCRIPTION OF REVISION

Plan Sheet No.	Sign Number	MOAS Sign Code	Work						Offset (ft)	Mounting Height	Background Color	Panel							Ground Mounted			Stringer		Overhead		Remarks
			New	Existing: Replace Panel	Existing: Relocate Panel	Existing: Modify Legend	Existing: Remove	Existing: To Remain				Legend	Width (in)	Height (in)	Area (sq ft)	Type	Sheeting Type	Bid Item Number	Foundations	Post: Type	Post: Total Length (ft)	New Slipbases	Type	Total Length (ft)	Structure Type	No. of Lights	
	N-MP8.4	W8-2	×				×		12	7	YL	DIP	30	30	6	RWM		6080005	2	2 1/2S	27	2					
	+	W16-104aP	×								YL	NEXT 6 MILES	36	18	4	RWM		6080005									
	N-MP9	D10-1AZ	×				×		12		GR	MILE 9						7030095									
	+	D10-1AZ	×								GR	MILE 9						7030095									Mount Sign Panel Back to Back
	N-MP9.0	OM-3(1)R	×				×				YL	Type 3(1) R						7030080									
	N-MP9.1	OM-3(1)R	×				×				YL	Type 3(1) R						7030080									
	N-MP9.2	OM-3(1)R	×				×				YL	Type 3(1) R						7030080									
	N-MP9.7A	OM-3(1)L	×				×				YL	Type 3(1) L						7030080									
	N-MP9.7B	OM-3(1)R	×				×				YL	Type 3(1) R						7030080									
	N-MP10	D10-2AZ	×				×		12		GR	MILE 10						7030095									
	+	D10-2AZ	×								GR	MILE 10						7030095									Mount Sign Panel Back to Back
	N-MP10.3A	OM-3(1)L	×				×				YL	Type 3(1) L						7030080									
	N-MP10.3B	OM-3(1)R	×				×				YL	Type 3(1) R						7030080									
	N-MP10.4	OM-3(1)R	×				×				YL	Type 3(1) R						7030080									
	N-MP10.7	OM-3(1)R	×				×				YL	Type 3(1) R						7030080									
	N-MP11	D10-2AZ	×				×		12		GR	MILE 11						7030095									
	+	D10-2AZ	×								GR	MILE 11						7030095									Mount Sign Panel Back to Back
	N-MP11.2	OM-3(1)R	×				×				YL	Type 3(1) R						7030080									
	N-MP11.3	W1-2L	×				×		12	7	YL	Left Curve Symbol	30	30	6	RWM		6080005	1	2 1/2S	11						
	N-MP11.4	OM-3(1)R	×				×				YL	Type 3(1) R						7030080									
	N-MP11.5A	OM-3(1)R	×				×				YL	Type 3(1) R						7030080									
	N-MP11.5B	W14-3AZ	×				×		12	7	YL	NO PASSING ZONE	48	36	6	RWM		6080005	2	2 1/2S	25	2					
	N-MP11.6	OM-3(1)R	×				×				YL	Type 3(1) R						7030080									
	N-MP11.7	OM-3(1)R	×				×				YL	Type 3(1) R						7030080									
	N-MP11.8	OM-3(1)R	×				×				YL	Type 3(1) R						7030080									
	N-MP11.9	OM-3(1)R	×				×				YL	Type 3(1) R						7030080									
	N-MP12	D10-2AZ	×				×		12		GR	MILE 12						7030095									
	+	D10-2AZ	×								GR	MILE 12						7030095									Mount Sign Panel Back to Back

F.H.W.A. REGION	STATE	PROJECT NO.	SHEET NO.	TOTAL SHEETS	RECORD DRAWINGS
9	ARIZ.	IT0-0(208)T	57	65	

0000 PM IT0

Notes:
1. The Contractor shall verify post lengths and elevations.
2. The Engineer may shift a sign in order to achieve a more desirable location.
3. Quantities are approximate and for the Contractor's information only.
4. Offsets are measured from white edge line to edge of sign panel closest to roadway. Where there is no white edge line, measurement shall be taken from face of curb.

Panel Types:
- RWM: Regulatory, Warning, or Marker
- F-DA: Flat-sheet aluminum with direct applied characters
- FYP: Fluorescent Yellow Prismatic
- EXT: Extruded Aluminum

Stringer Types:
- P: Perforated square-tube post
- T: T-section support

Structure Types:
- TT: Tapered tube, single beam

Post Types:
- 2S: 2" Single Perforated
- 2 1/2S: 2 1/2" Single Perforated
- 2 1/2T: 2 1/2" Telescoping

	NAME	DATE
DESIGN	AE	06-16
DRAWN	AE	06-16
CHECKED	KEB	06-16

TRANSPORTATION
AECOM TECHNICAL SERVICES, Inc.
7720 North 16th Street, Suite 100
Phoenix, Arizona 85020
T 602.371.1100
AECOM
www.aecom.com

ARIZONA DEPARTMENT OF TRANSPORTATION
INFRASTRUCTURE DELIVERY AND OPERATIONS DIVISION
TRAFFIC DESIGN SERVICES

SIGN SUMMARY
NB-IRR 42

Registered Professional Engineer
C. E.
45815
KATE E. BONDY
Date Signed 6/15/2016
ARIZONA, U.S.A.
Expires 3/31/2018

LOCATION
TOHONO O'ODHAM NATION VARIOUS LOCATIONS

DWG NO. T-3.44

TRACS NO. SH643 01C | | IT0-0(208)T | ____ OF ____

6/16/2016 P:\60306196\900-Work\910-CAD\006_Civil\Sheets\NB-IR42_signsummary_03.dgn

NO.1 DESCRIPTION OF REVISION | NO.2 DESCRIPTION OF REVISION | MADE BY | DATE | DATE

Plan Sheet No.	Sign Number	MOAS Sign Code	Work						Offset (ft)	Mounting Height	Background Color	Panel							Ground Mounted			Stringer			Overhead		Remarks
			New	Existing								Legend	Width (in)	Height (in)	Area (sq ft)	Type	Sheeting Type	Bid Item Number	Foundations	Post Type	Post Total Length (ft)	New Slipbases	Type	Total Length (ft)	Structure Type	No. of Lights	
				Replace Panel	Relocate Panel	Modify Legend	Remove	To Remain																			
	N-MP12.1	OM-3(1)R	×				×				YL	Type 3(1) R						7030080									
	N-MP12.22	W11-4	×				×		12	7	YL	Cattle Crossing Symbol	30	30	6	RWM		6080005	1	2 1/2S	11						
	N-MP12.25	OM-3(1)R	×				×				YL	Type 3(1) R						7030080									
	N-MP12.28	OM-3(1)R	×				×				YL	Type 3(1) R						7030080									
	N-MP12.3	OM-3(1)R	×				×				YL	Type 3(1) R						7030080									
	N-MP12.3A	OM-3(1)L	×				×				YL	Type 3(1) L						7030080									
	N-MP12.3B	OM-3(1)R	×				×				YL	Type 3(1) R						7030080									
	N-MP13	D10-2AZ	×				×		12		GR	MILE 13						7030095									
	+	D10-2AZ	×								GR	MILE 13						7030095									Mount Sign Panel Back to Back
	N-MP13.0	W14-3AZ	×				×		12	7	YL	NO PASSING ZONE	48	36	6	RWM		6080005	2	2 1/2S	25	2					
	N-MP13.1A	OM-3(1)L	×				×				YL	Type 3(1) L						7030080									
	N-MP13.1B	OM-3(1)R	×				×				YL	Type 3(1) R						7030080									
	N-MP13.1C	W1-2L	×				×		12	7	YL	Left Curve Symbol	30	30	6	RWM		6080005	1	2 1/2S	11						
	N-MP13.3	OM-3(1)R	×				×				YL	Type 3(1) R						7030080									
	N-MP13.4	OM-3(1)R	×				×				YL	Type 3(1) R						7030080									
	N-MP13.6	OM-3(1)R	×				×				YL	Type 3(1) R						7030080									
	N-MP14	D10-2AZ	×				×		12		GR	MILE 14						7030095									
	+	D10-2AZ	×								GR	MILE 14						7030095									Mount Sign Panel Back to Back
	N-MP14.03	R1-1	×				×		12	7	RD	STOP	30	30	6	RWM		6080005	1	2 1/2S	12						Side Road
	N-MP14.05	OM-3(1)R	×				×				YL	Type 3(1) R						7030080									
	N-MP14.07	R2-1	×				×		12	7	WH	SPEED LIMIT 55	24	30	5	RWM		6080005	1	2 1/2S	12						
	N-MP14.1	OM-3(1)R	×				×				YL	Type 3(1) R						7030080									
	N-MP14.2	W11-4	×				×		12	7	YL	Cattle Crossing Symbol	30	30	6	RWM		6080005	1	2 1/2S	11						
	N-MP14.9	W8-2	×				×		12	7	YL	DIP	30	30	6	RWM		6080005	1	2 1/2S	11						
	N-MP15	D10-2AZ	×				×		12		GR	MILE 15						7030095									
	+	D10-2AZ	×								GR	MILE 15						7030095									Mount Sign Panel Back to Back
	N-MP15.2	W14-3AZ	×				×		12	7	YL	NO PASSING ZONE	48	36	6	RWM		6080005	2	2 1/2S	25	2					

F.H.W.A. REGION	STATE	PROJECT NO.	SHEET NO.	TOTAL SHEETS	RECORD DRAWINGS
9	ARIZ.	IT0-0(208)T	58	65	

0000 PM IT0

Notes:
1. The Contractor shall verify post lengths and elevations.
2. The Engineer may shift a sign in order to achieve a more desirable location.
3. Quantities are approximate and for the Contractor's information only.
4. Offsets are measured from white edge line to edge of sign panel closest to roadway. Where there is no white edge line, measurement shall be taken from face of curb.

Panel Types:
- RWM: Regulatory, Warning, or Marker
- F-DA: Flat-sheet aluminum with direct applied characters
- FYP: Fluorescent Yellow Prismatic
- EXT: Extruded Aluminum

Stringer Types:
- P: Perforated square-tube post
- T: T-section support

Structure Types:
- TT: Tapered tube, single beam

Post Types:
- 2S: 2" Single Perforated
- 2 1/2S: 2 1/2" Single Perforated
- 2 1/2T: 2 1/2" Telescoping

	NAME	DATE
DESIGN	AE	06-16
DRAWN	AE	06-16
CHECKED	KEB	06-16

TRANSPORTATION
AECOM TECHNICAL SERVICES, Inc.
7720 North 16th Street, Suite 100
Phoenix, Arizona 85020
T 602.371.1100
AECOM
www.aecom.com

ARIZONA DEPARTMENT OF TRANSPORTATION
INFRASTRUCTURE DELIVERY AND OPERATIONS DIVISION
TRAFFIC DESIGN SERVICES

SIGN SUMMARY
NB-IRR 42

Registered Professional Engineer
CERTIFICATE NO.
45815
KATE E. BONDY
Date Signed 6/15/2016
ARIZONA, U.S.A.
Expires 3/31/2018

LOCATION
TOHONO O'ODHAM NATION VARIOUS LOCATIONS

DWG NO. T-3.45

TRACS NO. SH643 01C | | IT0-0(208)T | ____ OF ____

6/16/2016 P:¢60306196¢900-Work¢910-CAD¢006_Civil¢Sheets¢NB-IR42_signsummary_04.dgn

NO.1 NO.2 DESCRIPTION OF REVISION | MADE BY | DATE

F.H.W.A. REGION	STATE	PROJECT NO.	SHEET NO.	TOTAL SHEETS	RECORD DRAWINGS
9	ARIZ.	IT0-0(208)T	59	65	

0000 PM IT0

Plan Sheet No.	Sign Number	MOAS Sign Code	Work						Offset (ft)	Mounting Height	Background Color	Panel							Ground Mounted			Stringer		Overhead		Remarks
			New	Existing															Foundations	Post		New Slipbases				
				Replace Panel	Relocate Panel	Modify Legend	Remove	To Remain				Legend	Width (in)	Height (in)	Area (sq ft)	Type	Sheeting Type	Bid Item Number		Type	Total Length (ft)		Type	Total Length (ft)	Structure Type	No. of Lights	
	N-MP15.4A	OM-3(1)L	×				×				YL	Type 3(1) L						7030080									
	N-MP15.4B	OM-3(1)R	×				×				YL	Type 3(1) R						7030080									
	N-MP15.8	W8-2	×				×		12	7	YL	DIP	30	30	6	RWM		6080005	2	2 1/2S	27	2					
	+	W16-104aP	×								YL	NEXT 2 MILES	36	18	5	RWM		6080005									
	N-MP16	D10-2AZ	×				×		12		GR	MILE 16						7030095									
	+	D10-2AZ	×								GR	MILE 16						7030095									Mount Sign Panel Back to Back
	N-MP16.8	W14-3AZ	×				×		12	7	YL	NO PASSING ZONE	48	36	6	RWM		6080005	2	2 1/2S	25	2					
	N-MP17	D10-2AZ	×				×		12		GR	MILE 17						7030095									
	+	D10-2AZ	×								GR	MILE 17						7030095									Mount Sign Panel Back to Back
	N-MP17.0A	OM-3(1)L	×				×				YL	Type 3(1) L						7030080									
	N-MP17.0B	OM-3(1)R	×				×				YL	Type 3(1) R						7030080									
	N-MP17.7	W14-3AZ	×				×		12	7	YL	NO PASSING ZONE	48	36	6	RWM		6080005	2	2 1/2S	25	2					
	N-MP18	D10-2AZ	×				×		12		GR	MILE 18						7030095									
	+	D10-2AZ	×								GR	MILE 18						7030095									Mount Sign Panel Back to Back
	N-MP18.1	OM-3(1)R	×				×				YL	Type 3(1) R						7030080									
	N-MP18.2	OM-3(1)R	×				×				YL	Type 3(1) R						7030080									
	N-MP18.4	OM-3(1)R	×				×				YL	Type 3(1) R						7030080									
	N-MP18.7A	W14-3AZ	×				×		12	7	YL	NO PASSING ZONE	48	36	6	RWM		6080005	2	2 1/2S	25	2					
	N-MP18.7B	OM-3(1)R	×				×				YL	Type 3(1) R						7030080									
	N-MP18.8	W1-2L	×				×		12	7	YL	Left Curve Symbol	30	30	6	RWM		6080005	1	2 1/2S	11						
	N-MP18.9	OM-3(1)R	×				×				YL	Type 3(1) R						7030080									
	N-MP18.95	D1-1	×				×		12	7	GR	Cockelbur (Right Arrow)	72	18	9	F-DA		6080025	2	2S	22						See Format
	N-MP18.97	OM-3(1)R	×				×				YL	Type 3(1) R						7030080									
	N-MP19	D10-2AZ	×				×		12		GR	MILE 19						7030095									
	+	D10-2AZ	×								GR	MILE 19						7030095									Mount Sign Panel Back to Back
	N-MP19.1	R1-1	×				×		12	7	RD	STOP	30	30	6	RWM		6080005	1	2 1/2S	12						

Notes:
1. The Contractor shall verify post lengths and elevations.
2. The Engineer may shift a sign in order to achieve a more desirable location.
3. Quantities are approximate and for the Contractor's information only.
4. Offsets are measured from white edge line to edge of sign panel closest to roadway. Where there is no white edge line, measurement shall be taken from face of curb.

Panel Types:
- RWM: Regulatory, Warning, or Marker
- F-DA: Flat-sheet aluminum with direct applied characters
- FYP: Fluorescent Yellow Prismatic
- EXT: Extruded Aluminum

Stringer Types:
- P: Perforated square-tube post
- T: T-section support

Structure Types:
- TT: Tapered tube, single beam

Post Types:
- 2S: 2" Single Perforated
- 2 1/2S: 2 1/2" Single Perforated
- 2 1/2T: 2 1/2" Telescoping

	NAME	DATE
DESIGN	AE	06-16
DRAWN	AE	06-16
CHECKED	KEB	06-16

TRANSPORTATION
AECOM TECHNICAL SERVICES, Inc.
7720 North 16th Street, Suite 100
Phoenix, Arizona 85020
T 602.371.1100
AECOM
www.aecom.com

ARIZONA DEPARTMENT OF TRANSPORTATION
INFRASTRUCTURE DELIVERY AND OPERATIONS DIVISION
TRAFFIC DESIGN SERVICES

SIGN SUMMARY
NB-IRR 42

LOCATION
TOHONO O'ODHAM NATION VARIOUS LOCATIONS

Registered Professional Engineer
C. E.
45815
KATE E. BONDY
Date Signed 6/15/2016
ARIZONA, U.S.A.
Expires 3/31/2018

DWG NO. T-3.46

TRACS NO. SH643 01C | ITO-0(208)T | ____ OF ____

6/16/2016 P:\60306196\900-Work\910-CAD\006_Civil\Sheets\NB-IR42_signsummary_05.dgn

NO.1 DESCRIPTION OF REVISION | NO.2 DESCRIPTION OF REVISION | MADE BY | DATE

F.H.W.A. REGION	STATE	PROJECT NO.	SHEET NO.	TOTAL SHEETS	RECORD DRAWINGS
9	ARIZ.	ITO-0(208)T	60	65	

0000 PM ITO

Plan Sheet No.	Sign Number	MOAS Sign Code	Work						Offset (ft)	Mounting Height	Background Color	Panel							Ground Mounted			Stringer		Overhead		Remarks
				Existing																Post							
			New	Replace Panel	Relocate Panel	Modify Legend	Remove	To Remain				Legend	Width (in)	Height (in)	Area (sq ft)	Type	Sheeting Type	Bid Item Number	Foundations	Type	Total Length (ft)	New Slipbases	Type	Total Length (ft)	Structure Type	No. of Lights	
	S-MP19.0	OM-3(1)R	×				×				YL	Type 3(1) R						7030080									
	S-MP18.99	OM-3(1)R	×				×				YL	Type 3(1) R						7030080									
	S-MP18.97	OM-3(1)R	×				×				YL	Type 3(1) R						7030080									
	S-MP18.93	W11-4	×				×		12	7	YL	Cattle Crossing Symbol	30	30	6	RWM		6080005	1	2 1/2S	11						
	S-MP18.8	R2-1	×				×		12	7	WH	SPEED LIMIT 55	24	30	5	RWM		6080005	1	2 1/2S	12						
	S-MP18.7	OM-3(1)R	×				×				YL	Type 3(1) R						7030080									
	S-MP18.4	OM-3(1)R	×				×				YL	Type 3(1) R						7030080									
	S-MP18.2A	W14-3AZ	×				×		12	7	YL	NO PASSING ZONE	48	36	6	RWM		6080005	2	2 1/2S	25	2					
	S-MP18.2B	OM-3(1)R	×				×				YL	Type 3(1) R						7030080									
	S-MP18.1	OM-3(1)R	×				×				YL	Type 3(1) R						7030080									
	S-MP17.8	W8-2	×				×		12	7	YL	DIP	30	30	6	RWM		6080005	2	2 1/2S	27	2					
	+	W16-104aP	×								YL	NEXT 2 MILES	36	18	5	RWM		6080005									
	S-MP17.7	W14-3AZ	×				×		12	7	YL	NO PASSING ZONE	48	36	6	RWM		6080005	2	2 1/2S	25	2					
	S-MP17.1	W14-3AZ	×				×		12	7	YL	NO PASSING ZONE	48	36	6	RWM		6080005	2	2 1/2S	25	2					
	S-MP17.0A	OM-3(1)L	×				×				YL	Type 3(1) L						7030080									
	S-MP17.0B	OM-3(1)R	×				×				YL	Type 3(1) R						7030080									
	S-MP15.5	W14-3AZ	×				×		12	7	YL	NO PASSING ZONE	48	36	6	RWM		6080005	2	2 1/2S	25	2					
	S-MP15.4A	OM-3(1)L	×				×				YL	Type 3(1) L						7030080									
	S-MP15.4B	OM-3(1)R	×				×				YL	Type 3(1) R						7030080									
	S-MP15.2	W8-2	×				×		12	7	YL	DIP	30	30	6	RWM		6080005	1	2 1/2S	11						
	S-MP14.1	OM-3(1)R	×				×				YL	Type 3(1) R						7030080									
	S-MP14.0A	OM-3(1)R	×				×				YL	Type 3(1) R						7030080									
	S-MP14.0B	W14-3AZ	×				×		12	7	YL	NO PASSING ZONE	48	36	6	RWM		6080005	2	2 1/2S	25	2					
	S-MP13.8	W8-2	×				×		12	7	YL	DIP	30	30	6	RWM		6080005	2	2 1/2S	27	2					
	+	W16-104aP	×								YL	NEXT 6 MILES	36	18	5	RWM		6080005									

Notes:
1. The Contractor shall verify post lengths and elevations.
2. The Engineer may shift a sign in order to achieve a more desirable location.
3. Quantities are approximate and for the Contractor's information only.
4. Offsets are measured from white edge line to edge of sign panel closest to roadway. Where there is no white edge line, measurement shall be taken from face of curb.

Panel Types:
- RWM: Regulatory, Warning, or Marker
- F-DA: Flat-sheet aluminum with direct applied characters
- FYP: Fluorescent Yellow Prismatic
- EXT: Extruded Aluminum

Stringer Types:
- P: Perforated square-tube post
- T: T-section support

Structure Types:
- TT: Tapered tube, single beam

Post Types:
- 2S: 2" Single Perforated
- 2 1/2S: 2 1/2" Single Perforated
- 2 1/2T: 2 1/2" Telescoping

	NAME	DATE
DESIGN	AE	06-16
DRAWN	AE	06-16
CHECKED	KEB	06-16

TRANSPORTATION
AECOM TECHNICAL SERVICES, Inc.
7720 North 16th Street, Suite 100
Phoenix, Arizona 85020
T 602.371.1100
AECOM
www.aecom.com

ARIZONA DEPARTMENT OF TRANSPORTATION
INFRASTRUCTURE DELIVERY AND OPERATIONS DIVISION
TRAFFIC DESIGN SERVICES

SIGN SUMMARY
SB-IRR 42

Registered Professional Engineer
C. E.
45815
KATE E. BONDY
Date Signed 6/15/2016
ARIZONA, U.S.A.
Expires 3/31/2018

LOCATION
TOHONO O'ODHAM NATION VARIOUS LOCATIONS

DWG NO. T-3.47

TRACS NO. SH643 01C | ITO-0(208)T | ____ OF ____

6/16/2016 P:¢60306196¢900-Work¢910-CAD¢006_Civil¢Sheets¢SB-IR42_signsummary_01.dgn

DATE | MADE BY | NO.2 DESCRIPTION OF REVISION | DATE | MADE BY | NO.1 DESCRIPTION OF REVISION

Plan Sheet No.	Sign Number	MOAS Sign Code	Work						Offset (ft)	Mounting Height	Background Color	Panel							Ground Mounted			Stringer		Overhead		Remarks
			New	Existing								Legend	Width (in)	Height (in)	Area (sq ft)	Type	Sheeting Type	Bid Item Number	Foundations	Post		New Slipbases	Type	Total Length (ft)	Structure Type	No. of Lights	
				Replace Panel	Relocate Panel	Modify Legend	Remove	To Remain												Type	Total Length (ft)						
	S-MP13.7	R2-1	×				×		12	7	WH	SPEED LIMIT 55	24	30	5	RWM		6080005	1	2 1/2S	12					
	S-MP13.6	OM-3(1)R	×				×				YL	Type 3(1) R						7030080								
	S-MP13.5	W1-2R	×						12	7	YL	Right Curve Symbol	30	30	6	RWM		6080005	1	2 1/2S	11					
	S-MP13.4	OM-3(1)R	×				×				YL	Type 3(1) R						7030080								
	S-MP13.3	OM-3(1)R	×				×				YL	Type 3(1) R						7030080								
	S-MP13.1A	OM-3(1)L	×				×				YL	Type 3(1) L						7030080								
	S-MP13.1B	OM-3(1)R	×				×				YL	Type 3(1) R						7030080								
	S-MP12.4	W14-3AZ	×				×		12	7	YL	NO PASSING ZONE	48	36	6	RWM		6080005	2	2 1/2S	25	2				
	S-MP12.3A	OM-3(1)L	×				×				YL	Type 3(1) L						7030080								
	S-MP12.3B	OM-3(1)R	×				×				YL	Type 3(1) R						7030080								
	S-MP12.22	OM-3(1)R	×				×				YL	Type 3(1) R						7030080								
	S-MP12.24	OM-3(1)R	×				×				YL	Type 3(1) R						7030080								
	S-MP12.26	OM-3(1)R	×				×				YL	Type 3(1) R						7030080								
	S-MP12.28	W11-4	×				×		12	7	YL	Cattle Crossing Symbol	30	30	6	RWM		6080005	1	2 1/2S	11					
	S-MP12.1	OM-3(1)R	×				×				YL	Type 3(1) R						7030080								
	S-MP12.05	W11-4	×				×		12	7	YL	Cattle Crossing Symbol	30	30	6	RWM		6080005	1	2 1/2S	11					
	S-MP11.9	OM-3(1)R	×				×				YL	Type 3(1) R						7030080								
	S-MP11.8	OM-3(1)R	×				×				YL	Type 3(1) R						7030080								
	S-MP11.7A	W14-3AZ	×				×		12	7	YL	NO PASSING ZONE	48	36	6	RWM		6080005	2	2 1/2S	25	2				
	S-MP11.7B	W1-2R	×				×		12	7	YL	Right Curve Symbol	30	30	6	RWM		6080005	1	2 1/2S	11					
	S-MP11.7C	OM-3(1)R	×				×				YL	Type 3(1) R						7030080								
	S-MP11.6	OM-3(1)R	×				×				YL	Type 3(1) R						7030080								
	S-MP11.5	OM-3(1)R	×				×				YL	Type 3(1) R						7030080								
	S-MP11.4	OM-3(1)R	×				×				YL	Type 3(1) R						7030080								
	S-MP11.3	OM-3(1)R	×				×				YL	Type 3(1) R						7030080								

F.H.W.A. REGION	STATE	PROJECT NO.	SHEET NO.	TOTAL SHEETS	RECORD DRAWINGS
9	ARIZ.	ITO-0(208)T	61	65	

0000 PM ITO

DATE | MADE BY | NO.2 DESCRIPTION OF REVISION | DATE | MADE BY | NO.1 DESCRIPTION OF REVISION

Notes:
1. The Contractor shall verify post lengths and elevations.
2. The Engineer may shift a sign in order to achieve a more desirable location.
3. Quantities are approximate and for the Contractor's information only.
4. Offsets are measured from white edge line to edge of sign panel closest to roadway. Where there is no white edge line, measurement shall be taken from face of curb.

Panel Types:
RWM: Regulatory, Warning, or Marker
F-DA: Flat-sheet aluminum with direct applied characters
FYP: Fluorescent Yellow Prismatic
EXT: Extruded Aluminum

Stringer Types:
P: Perforated square-tube post
T: T-section support

Structure Types:
TT: Tapered tube, single beam

Post Types:
2S: 2" Single Perforated
2 1/2S: 2 1/2" Single Perforated
2 1/2T: 2 1/2" Telescoping

	NAME	DATE
DESIGN	AE	06-16
DRAWN	AE	06-16
CHECKED	KEB	06-16

TRANSPORTATION
AECOM TECHNICAL SERVICES, Inc.
7720 North 16th Street, Suite 100
Phoenix, Arizona 85020
T 602.371.1100
AECOM
www.aecom.com

ARIZONA DEPARTMENT OF TRANSPORTATION
INFRASTRUCTURE DELIVERY AND OPERATIONS DIVISION
TRAFFIC DESIGN SERVICES

SIGN SUMMARY
SB-IRR 42

Registered Professional Engineer
C. E.
45815
KATE E. BONDY
Date Signed 6/15/2016
ARIZONA, U.S.A.
Expires 3/31/2018

LOCATION
TOHONO O'ODHAM NATION VARIOUS LOCATIONS

DWG NO. T-3.48

TRACS NO. SH643 01C | ITO-0(208)T | ____ OF ____

6/16/2016 P:\60306196\900-Work\910-CAD\006_Civil\Sheets\SB-IR42_signsummary_02.dgn

Plan Sheet No.	Sign Number	MOAS Sign Code	Work						Offset (ft)	Mounting Height	Background Color	Panel							Ground Mounted			Stringer			Overhead		Remarks
			New	Existing															Foundations	Post		New Slipbases					
				Replace Panel	Relocate Panel	Modify Legend	Remove	To Remain				Legend	Width (in)	Height (in)	Area (sq ft)	Type	Sheeting Type	Bid Item Number		Type	Total Length (ft)		Type	Total Length (ft)	Structure Type	No. of Lights	
	S-MP10.6	OM-3(1)R	×				×				YL	Type 3(1) R						7030080									
	S-MP10.7	OM-3(1)R	×				×				YL	Type 3(1) R						7030080									
	S-MP10.4A	OM-3(1)L	×				×				YL	Type 3(1) L						7030080									
	S-MP10.4B	OM-3(1)R	×				×				YL	Type 3(1) R						7030080									
	S-MP9.7A	OM-3(1)L	×				×				YL	Type 3(1) L						7030080									
	S-MP9.7B	OM-3(1)R	×				×				YL	Type 3(1) R						7030080									
	S-MP9.2	OM-3(1)R	×				×				YL	Type 3(1) R						7030080									
	S-MP9.0	OM-3(1)R	×				×				YL	Type 3(1) R						7030080									
	S-MP8.4	W14-3AZ	×				×		12	7	YL	NO PASSING ZONE	48	36	6	RWM		6080005	2	2 1/2S	25	2					
	S-MP8.3A	OM-3(1)L	×				×				YL	Type 3(1) L						7030080									
	S-MP8.3B	OM-3(1)R	×				×				YL	Type 3(1) R						7030080									
	S-MP8.2	OM-3(1)R	×				×				YL	Type 3(1) R						7030080									
	S-MP8.1	OM-3(1)R	×				×				YL	Type 3(1) R						7030080									
	S-MP7.95	W8-2	×				×		12	7	YL	DIP	30	30	6	RWM		6080005	1	2 1/2S	11						
	S-MP7.9	W8-1	×				×		12	7	YL	BUMP	30	30	6	RWM		6080005	1	2 1/2S	14						
	+	W13-1P	×								YL	45 M.P.H.	18	18	2	RWM		6080005									
	S-MP7.8A	OM-3(1)L	×				×				YL	Type 3(1) L						7030080									
	S-MP7.8B	OM-3(1)R	×				×				YL	Type 3(1) R						7030080									
	S-MP7.8	D1-1	×				×		12	7	GR	(Left Arrow) Kohatk	60	18	8	F-DA		6080025	2	2S	22						See Format
	S-MP7.5	W14-3AZ	×				×		12	7	YL	NO PASSING ZONE	48	36	6	RWM		6080005	2	2 1/2S	25	2					
	S-MP7.4	OM-3(1)R	×				×				YL	Type 3(1) R						7030080									
	S-MP7.2	R2-1	×				×		12	7	WH	SPEED LIMIT 55	24	30	5	RWM		6080005	1	2 1/2S	12						
	S-MP7.1	W11-4	×				×		12	7	YL	Cattle Crossing Symbol	30	30	6	RWM		6080005	1	2 1/2S	11						
	S-MP6.7A	OM-3(1)R	×				×				YL	Type 3(1) R						7030080									
	S-MP6.7B	W14-3AZ	×				×		12	7	YL	NO PASSING ZONE	48	36	6	RWM		6080005	2	2 1/2S	25	2					

F.H.W.A. REGION	STATE	PROJECT NO.	SHEET NO.	TOTAL SHEETS	RECORD DRAWINGS
9	ARIZ.	ITO-0(208)T	62	65	

0000 PM ITO

DATE | MADE BY | NO.2 DESCRIPTION OF REVISION | DATE | MADE BY | NO.1 DESCRIPTION OF REVISION

Notes:
1. The Contractor shall verify post lengths and elevations.
2. The Engineer may shift a sign in order to achieve a more desirable location.
3. Quantities are approximate and for the Contractor's information only.
4. Offsets are measured from white edge line to edge of sign panel closest to roadway. Where there is no white edge line, measurement shall be taken from face of curb.

Panel Types:
- RWM: Regulatory, Warning, or Marker
- F-DA: Flat-sheet aluminum with direct applied characters
- FYP: Fluorescent Yellow Prismatic
- EXT: Extruded Aluminum

Stringer Types:
- P: Perforated square-tube post
- T: T-section support

Structure Types:
- TT: Tapered tube, single beam

Post Types:
- 2S: 2" Single Perforated
- 2 1/2S: 2 1/2" Single Perforated
- 2 1/2T: 2 1/2" Telescoping

	NAME	DATE
DESIGN	AE	06-16
DRAWN	AE	06-16
CHECKED	KEB	06-16

TRANSPORTATION
AECOM TECHNICAL SERVICES, Inc.
7720 North 16th Street, Suite 100
Phoenix, Arizona 85020
T 602.371.1100
AECOM
www.aecom.com

ARIZONA DEPARTMENT OF TRANSPORTATION
INFRASTRUCTURE DELIVERY AND OPERATIONS DIVISION
TRAFFIC DESIGN SERVICES

SIGN SUMMARY
SB-IRR 42

Registered Professional Engineer
C. P. E.
45815
KATE E. BONDY
Date Signed 6/15/2016
ARIZONA, U.S.A.
Expires 3/31/2018

LOCATION
TOHONO O'ODHAM NATION VARIOUS LOCATIONS

DWG NO. T-3.49

TRACS NO. SH643 01C | ITO-0(208)T | ____ OF ____

6/16/2016 P:\60306196\900-Work\910-CAD\006_Civil\Sheets\SB-IR42_signsummary_03.dgn

Plan Sheet No.	Sign Number	MOAS Sign Code	Work						Offset (ft)	Mounting Height	Background Color	Panel							Ground Mounted			Stringer		Overhead		
				Existing																Post						
			New	Replace Panel	Relocate Panel	Modify Legend	Remove	To Remain				Legend	Width (in)	Height (in)	Area (sq ft)	Type	Sheeting Type	Bid Item Number	Foundations	Type	Total Length (ft)	New Slipbases	Type	Total Length (ft)	Structure Type	No. of Lights	Remarks
	S-MP6.6A	W1-8L	×				×		12	5	YL	Left Chevron	24	30	5	RWM		6080005	1	2 1/2S	12						
	S-MP6.6B	W1-8L	×				×		12	5	YL	Left Chevron	24	30	5	RWM		6080005	1	2 1/2S	12						
	+	W1-8R	×				×			5	YL	Right Chevron	24	30	5	RWM		6080005									Mount Sign Panel Back to Back
	S-MP6.6C	W1-8L	×				×		12	5	YL	Left Chevron	24	30	5	RWM		6080005	1	2 1/2S	12						
	+	W1-8R	×				×			5	YL	Right Chevron	24	30	5	RWM		6080005									Mount Sign Panel Back to Back
	S-MP6.6D	W1-8L	×				×		12	5	YL	Left Chevron	24	30	5	RWM		6080005	1	2 1/2S	12						
	+	W1-8R	×				×			5	YL	Right Chevron	24	30	5	RWM		6080005									Mount Sign Panel Back to Back
	S-MP6.6E	W1-8L	×				×		12	5	YL	Left Chevron	24	30	5	RWM		6080005	1	2 1/2S	12						
	+	W1-8R	×				×			5	YL	Right Chevron	24	30	5	RWM		6080005									Mount Sign Panel Back to Back
	S-MP6.6F	W1-8R	×				×		12	5	YL	Rigth Chevron	24	30	5	RWM		6080005	1	2 1/2S	12						Faces NB Direction
	S-MP6.5	W8-2	×				×		12	7	YL	DIP	30	30	6	RWM		6080005	1	2 1/2S	11						
	S-MP5.8	OM-3(1)R	×				×				YL	Type 3(1) R						7030080									
	S-MP5.7	OM-3(1)R	×				×				YL	Type 3(1) R						7030080									
	S-MP5.65	OM-3(1)R	×				×				YL	Type 3(1) R						7030080									
	S-MP5.6A	W14-3AZ	×				×		12	7	YL	NO PASSING ZONE	48	36	6	RWM		6080005	2	2 1/2S	25	2					
	S-MP5.6B	W1-2L	×				×		12	7	YL	Left Curve Symbol	30	30	6	RWM		6080005	1	2 1/2S	14						
	+	W13-1P	×								YL	45 M.P.H.	18	18	2	RWM		6080005									
	S-MP5.59	OM-3(1)R	×				×				YL	Type 3(1) R						7030080									
	S-MP5.57	OM-3(1)R	×				×				YL	Type 3(1) R						7030080									
	S-MP5.53	OM-3(1)R	×				×				YL	Type 3(1) R						7030080									
	S-MP5.2A	W1-8L	×				×		12	5	YL	Left Chevron	24	30	5	RWM		6080005	1	2 1/2S	12						
	S-MP5.2B	W1-8L	×				×		12	5	YL	Left Chevron	24	30	5	RWM		6080005	1	2 1/2S	12						
	+	W1-8R	×				×			5	YL	Right Chevron	24	30	5	RWM		6080005									Mount Sign Panel Back to Back
	S-MP5.2C	W1-8L	×				×		12	5	YL	Left Chevron	24	30	5	RWM		6080005	1	2 1/2S	12						
	+	W1-8R	×				×			5	YL	Right Chevron	24	30	5	RWM		6080005									Mount Sign Panel Back to Back
	S-MP5.2D	W1-8L	×				×		12	5	YL	Left Chevron	24	30	5	RWM		6080005	1	2 1/2S	12						
	+	W1-8R	×				×			5	YL	Right Chevron	24	30	5	RWM		6080005									Mount Sign Panel Back to Back
	S-MP5.2E	W1-8L	×				×		12	5	YL	Left Chevron	24	30	5	RWM		6080005	1	2 1/2S	12						
	+	W1-8R	×				×			5	YL	Right Chevron	24	30	5	RWM		6080005									Mount Sign Panel Back to Back
	S-MP5.2F	W1-8L	×				×		12	5	YL	Left Chevron	24	30	5	RWM		6080005	1	2 1/2S	12						
	+	W1-8R	×				×			5	YL	Right Chevron	24	30	5	RWM		6080005									Mount Sign Panel Back to Back

F.H.W.A. REGION	STATE	PROJECT NO.	SHEET NO.	TOTAL SHEETS	RECORD DRAWINGS
9	ARIZ.	ITO-0(208)T	63	65	

0000 PM ITO

DATE | MADE BY | DESCRIPTION OF REVISION

NO.2 | DATE | MADE BY | DESCRIPTION OF REVISION

NO.1 | DATE | MADE BY | DESCRIPTION OF REVISION

Notes:
1. The Contractor shall verify post lengths and elevations.
2. The Engineer may shift a sign in order to achieve a more desirable location.
3. Quantities are approximate and for the Contractor's information only.
4. Offsets are measured from white edge line to edge of sign panel closest to roadway. Where there is no white edge line, measurement shall be taken from face of curb.

Panel Types:
RWM: Regulatory, Warning, or Marker
F-DA: Flat-sheet aluminum with direct applied characters
FYP: Fluorescent Yellow Prismatic
EXT: Extruded Aluminum

Stringer Types:
P: Perforated square-tube post
T: T-section support

Structure Types:
TT: Tapered tube, single beam

Post Types:
2S: 2" Single Perforated
2 1/2S: 2 1/2" Single Perforated
2 1/2T: 2 1/2" Telescoping

	NAME	DATE
DESIGN	AE	06-16
DRAWN	AE	06-16
CHECKED	KEB	06-16

TRANSPORTATION
AECOM TECHNICAL SERVICES, Inc.
7720 North 16th Street, Suite 100
Phoenix, Arizona 85020
T 602.371.1100
AECOM
www.aecom.com

ARIZONA DEPARTMENT OF TRANSPORTATION
INFRASTRUCTURE DELIVERY AND OPERATIONS DIVISION
TRAFFIC DESIGN SERVICES

SIGN SUMMARY
SB-IRR 42

Registered Professional Engineer
CERTIFICATE NO.
45815
KATE E. BONDY
Date Signed 6/15/2016
ARIZONA, U.S.A.
Expires 3/31/2018

LOCATION
TOHONO O'ODHAM NATION VARIOUS LOCATIONS

DWG NO. T-3.50

TRACS NO. SH643 01C | ITO-0(208)T | ____ OF ____

6/16/2016 P:¢60306196¢900-Work¢910-CAD¢006_Civil¢Sheets¢SB-IR42_signsummary_04.dgn

Plan Sheet No.	Sign Number	MOAS Sign Code	Work						Offset (ft)	Mounting Height	Background Color	Panel							Ground Mounted			Stringer			Overhead		Remarks
			New	Existing															Foundations	Post		New Slipbases	Type	Total Length (ft)	Structure Type	No. of Lights	
				Replace Panel	Relocate Panel	Modify Legend	Remove	To Remain				Legend	Width (in)	Height (in)	Area (sq ft)	Type	Sheeting Type	Bid Item Number		Type	Total Length (ft)						
	S-MP5.2G	W1-8L	×				×		12	5	YL	Left Chevron	24	30	5	RWM		6080005	1	2 1/2S	12						
	+	W1-8R	×				×			5	YL	Right Chevron	24	30	5	RWM		6080005									Mount Sign Panel Back to Back
	S-MP5.2H	W1-8L	×				×		12	5	YL	Left Chevron	24	30	5	RWM		6080005	1	2 1/2S	12						
	+	W1-8R	×				×			5	YL	Right Chevron	24	30	5	RWM		6080005									Mount Sign Panel Back to Back
	S-MP5.2I	W1-8L	×				×		12	5	YL	Left Chevron	24	30	5	RWM		6080005	1	2 1/2S	12						
	+	W1-8R	×				×			5	YL	Right Chevron	24	30	5	RWM		6080005									Mount Sign Panel Back to Back
	S-MP5.2J	W1-8R	×				×		12	5	YL	Right Chevron	24	30	5	RWM		6080005	1	2 1/2S	12						Faces NB Direction
	S-MP5.0	W14-3AZ	×				×		12	7	YL	NO PASSING ZONE	48	36	6	RWM		6080005	2	2 1/2S	25	2					
	S-MP2.8	W14-3AZ	×				×		12	7	YL	NO PASSING ZONE	48	36	6	RWM		6080005	2	2 1/2S	25	2					
	S-MP1.5A	W11-4	×				×		12	7	YL	Cattle Crossing Symbol	30	30	6	RWM		6080005	1	2 1/2S	11						
	S-MP1.5B	W14-3AZ	×				×		12	7	YL	NO PASSING ZONE	48	36	6	RWM		6080005	2	2 1/2S	25	2					
	S-MP1.2	W8-2	×				×		12	7	YL	DIP	30	30	6	RWM		6080005	1	2 1/2S	11						
	S-MP0.8A	OM-3(1)R	×								YL	Type 3(1) R						7030080									
	S-MP0.8B	W14-3AZ	×				×		12	7	YL	NO PASSING ZONE	48	36	6	RWM		6080005	2	2 1/2S	25						
	S-MP0.1	W3-1	×				×		12	7	YL	Stop Ahead Symbol	30	30	6	RWM		6080005	1	2 1/2S	11						
	S-M0.0	R1-1	×				×		12	7	RD	STOP	30	30	6	RWM		6080005	1	2 1/2S	12						

F.H.W.A. REGION	STATE	PROJECT NO.	SHEET NO.	TOTAL SHEETS	RECORD DRAWINGS
9	ARIZ.	ITO-0(208)T	64	65	

0000 PM ITO

Notes:
1. The Contractor shall verify post lengths and elevations.
2. The Engineer may shift a sign in order to achieve a more desirable location.
3. Quantities are approximate and for the Contractor's information only.
4. Offsets are measured from white edge line to edge of sign panel closest to roadway. Where there is no white edge line, measurement shall be taken from face of curb.

Panel Types:
- RWM: Regulatory, Warning, or Marker
- F-DA: Flat-sheet aluminum with direct applied characters
- FYP: Fluorescent Yellow Prismatic
- EXT: Extruded Aluminum

Stringer Types:
- P: Perforated square-tube post
- T: T-section support

Structure Types:
- TT: Tapered tube, single beam

Post Types:
- 2S: 2" Single Perforated
- 2 1/2S: 2 1/2" Single Perforated
- 2 1/2T: 2 1/2" Telescoping

	NAME	DATE
DESIGN	AE	06-16
DRAWN	AE	06-16
CHECKED	KEB	06-16

TRANSPORTATION
AECOM TECHNICAL SERVICES, Inc.
7720 North 16th Street, Suite 100
Phoenix, Arizona 85020
T 602.371.1100
AECOM
www.aecom.com

ARIZONA DEPARTMENT OF TRANSPORTATION
INFRASTRUCTURE DELIVERY AND OPERATIONS DIVISION
TRAFFIC DESIGN SERVICES

SIGN SUMMARY
SB-IRR 42

Registered Professional Engineer
C. E.
45815
KATE E. BONDY
Date Signed 6/15/2016
ARIZONA, U.S.A.
Expires 3/31/2018

LOCATION
TOHONO O'ODHAM NATION VARIOUS LOCATIONS

DWG NO. T-3.51

TRACS NO. SH643 01C | | ITO-0(208)T | ____ OF ____

6/16/2016 P:¢60306196¢900-Work¢910-CAD¢006_Civil¢Sheets¢SB-IR42_signsummary_05.dgn

DATE | MADE BY | NO.2 DESCRIPTION OF REVISION | DATE | MADE BY | NO.1 DESCRIPTION OF REVISION

F.H.W.A. REGION	STATE	PROJECT NO.	SHEET NO.	TOTAL SHEETS	RECORD DRAWINGS
9	ARIZ.	ITO-0(208)T	65	65	

0000 PM ITO

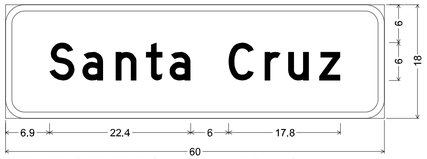

IRR21-N12.3, S12.7; 3.0" Radius, 1.0" Border, White on Green;
[Santa Cruz] D;

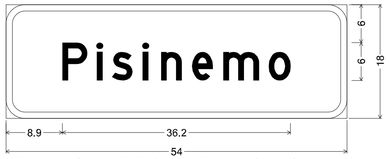

IRR21-N17.7, S18.4; 3.0" Radius, 1.0" Border, White on Green;
[Pisinemo] D;

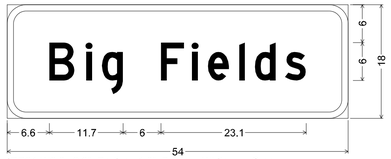

IRR24-W6.8; 3.0" Radius, 1.0" Border, White on Green;
[Big Fields] D;

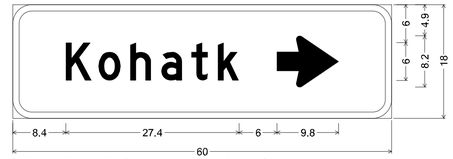

IRR42-N7.57; 3.0" Radius, 1.0" Border, White on Green;
[Kohatk] D; Arrow 6" Type D1 - 9.8" 0°;

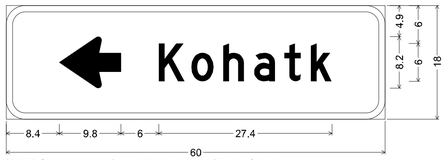

IRR42-S7.8; 3.0" Radius, 1.0" Border, White on Green;
Arrow 6" Type D1 - 9.8" 180°; [Kohatk] D;

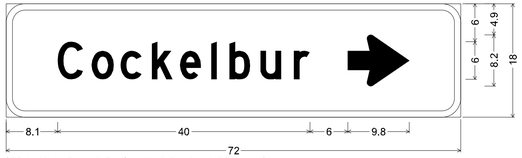

IRR42-N18.95; 3.0" Radius, 1.0" Border, White on Green;
[Cockelbur] D; Arrow 6" Type D1 - 9.8" 0°;

	NAME	DATE
DESIGN	AE	06-16
DRAWN	AE	06-16
CHECKED	KEB	06-16

TRANSPORTATION

AECOM TECHNICAL SERVICES, Inc.
7720 North 16th Street, Suite 100
Phoenix, Arizona 85020
T 602.371.1100
AECOM
www.aecom.com

ARIZONA DEPARTMENT OF TRANSPORTATION
INFRASTRUCTURE DELIVERY AND OPERATIONS DIVISION
TRAFFIC DESIGN SERVICES

SIGN FORMAT SHEETS

LOCATION
TOHONO O'ODHAM NATION VARIOUS LOCATIONS

Registered Professional Engineer
KATE E. BONDY
45815
Date Signed 6/14/2016
ARIZONA, U.S.A.
Expires 3/31/2018

DWG NO. T-4.01

TRACS NO. SH643 01C | | ITO-0(208)T | ___ OF ___

SURVEY NO. | FINISHED PLANS | REVISIONS | LOCATION | DATE

6/14/2016 P:\60306196\900-Work\910-CAD\001_General\Sheets\Phase 3\t06196f01(Phase3).dgn