STATE OF ARIZONA
DEPARTMENT OF TRANSPORTATION
INFRASTRUCTURE DELIVERY AND OPERATIONS DIVISION

ADOT

PROJECT PLANS

STATE HIGHWAY
TUCSON – BENSON HIGHWAY
INTERSTATE 10

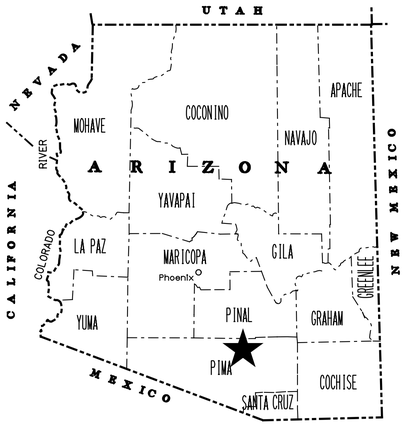

BRIDGE DECK REHABILITATION
MP 267.81 to MP 268.36

T15S R14E

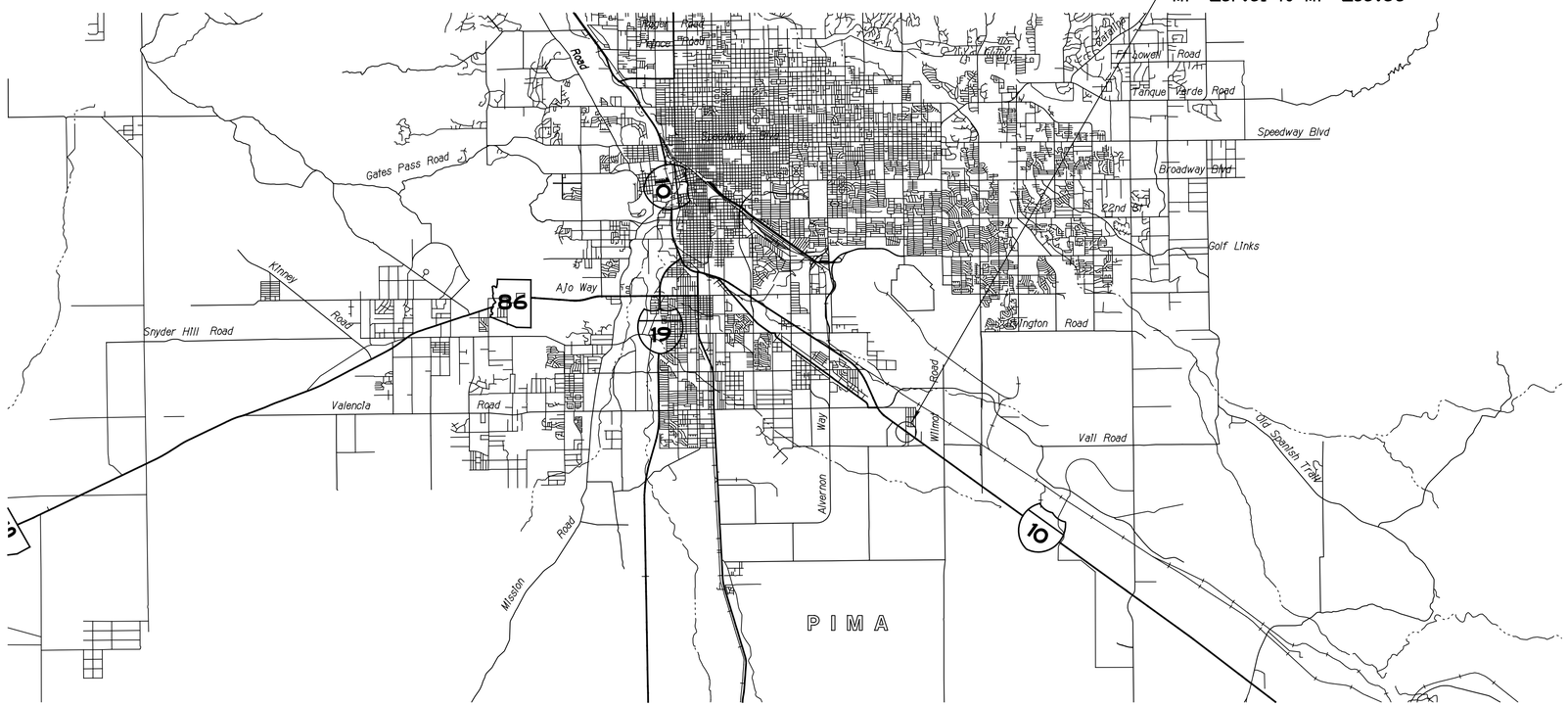

Constructed by:

Construction Company

Completion Date

Red-Lines by:

Construction Administrator Name & Company

Completion Date

Record Drawing by:

Record Drawing Designer Name & Company

Completion Date

CRAYCROFT RD TI OP STR #594 & #595

PROJECT NO. 010 PM 267 H8774 01 C
FEDERAL AID NO. NHPP–010–E(219)T

ARIZONA DEPARTMENT OF TRANSPORTATION
INFRASTRUCTURE DELIVERY AND OPERATIONS DIVISION
DALLAS HAMMIT, P.E., STATE ENGINEER

RECORD DRAWING DATA	RECORD DRAWING DATE	_____ OF _____

ADOT STANDARD DRAWINGS
C STANDARDS

ISSUE OR REVISION DATE	STANDARD NO.	SUBJECT
		CONSTRUCTION
5/12	C-01.10 SH 1	SYMBOL LEGEND
5/12	C-01.10 SH 2	SYMBOL LEGEND
5/12	C-01.10 SH 3	SYMBOL LEGEND
5/12	C-01.10 SH 4	SYMBOL LEGEND
5/12	C-01.30 SH 1	GENERAL ABBREVIATIONS
5/12	C-01.30 SH 2	GENERAL ABBREVIATIONS
5/12	C-01.30 SH 3	GENERAL ABBREVIATIONS
5/12	C-02.10	SLOPES, RURAL DIVIDED HIGHWAYS
5/12	C-02.20	SLOPES, RURAL UNDIVIDED AND FRINGE-URBAN HIGHWAYS
5/12	C-02.30	SLOPES, MISCELLANEOUS ROADWAYS
5/12	C-03.10 SH 1	DITCHES, CHANNELS, DIKES AND BERMS, DITCHES AND CHANNELS
5/12	C-03.10 SH 2	DITCHES, CHANNELS, DIKES AND BERMS, DIKES
5/12	C-03.10 SH 3	DITCHES, CHANNELS, DIKES AND BERMS, DITCH DIKE
5/12	C-03.10 SH 4	DITCHES, CHANNELS, DIKES AND BERMS, PIPE BERMS
5/12	C-03.10 SH 5	DITCHES, CHANNELS, DIKES AND BERMS, HEADWALL BERMS
5/12	C-04.10 SH 1	SPILLWAY, EMBANKMENT SINGLE INLET
5/12	C-04.10 SH 2	SPILLWAY, EMBANKMENT DOUBLE INLET
5/12	C-04.20 SH 1	DOWNDRAIN, EMBANKMENT SINGLE INLET
5/12	C-04.20 SH 2	DOWNDRAIN, EMBANKMENT DOUBLE INLET
5/12	C-04.30	SPILLWAY LENGTH TABLE
5/12	C-04.40	DOWNDRAIN LENGTH TABLE
5/12	C-04.50	DOWNDRAIN ENERGY DISSIPATOR
5/12	C-05.10	CURB & GUTTER, CURB, GUTTER
5/12	C-05.12 SH 1	CURB & GUTTER TRANSITIONS
5/12	C-05.12 SH 2	CURB & GUTTER TRANSITIONS
5/12	C-05.12 SH 3	CURB AND GUTTER TRANSITIONS
5/12	C-05.20 SH 1	CONCRETE DRIVEWAYS & SIDEWALKS, DRIVEWAYS
5/12	C-05.20 SH 2	CONCRETE DRIVEWAYS & SIDEWALKS, SIDEWALKS
5/12	C-05.30 SH 1	SIDEWALK RAMP, TYPE A
5/12	C-05.30 SH 2	SIDEWALK RAMP, TYPE B
5/12	C-05.30 SH 3	SIDEWALK RAMP, TYPE C
5/12	C-05.30 SH 4	SIDEWALK RAMP, TYPE D
5/12	C-05.30 SH 5	SIDEWALK RAMP, TYPE E
5/12	C-05.30 SH 6	SIDEWALK RAMP, TYPE F
5/12	C-05.30 SH 7	SIDEWALK RAMP, DETECTABLE WARNING STRIP
5/12	C-05.40	MEDIAN PAVING AND NOSE TAPER
5/12	C-05.50	CONCRETE BUS BAY
5/12	C-06.10 SH 1	DRIVEWAY & TURNOUT LAYOUTS
5/12	C-06.10 SH 2	DRIVEWAY & TURNOUT LAYOUTS
5/12	C-07.01 SH 1	PCCP JOINTS
5/12	C-07.01 SH 2	PCCP JOINTS
5/12	C-07.02	LOAD TRANSFER DOWEL ASSEMBLY
5/12	C-07.03 SH 1	PCCP JOINT LOCATIONS, MAINLINE SKEWED JOINTS
5/12	C-07.03 SH 2	PCCP JOINT LOCATIONS, MAINLINE SKEWED JOINTS
5/12	C-07.03 SH 3	PCCP JOINT LOCATIONS, MAINLINE SKEWED JOINTS
5/12	C-07.03 SH 4	PCCP JOINT LOCATIONS, MAINLINE SKEWED JOINTS
5/12	C-07.03 SH 5	PCCP JOINT LOCATIONS, MAINLINE NON-SKEWED JOINTS
5/12	C-07.03 SH 6	PCCP JOINT LOCATIONS, MAINLINE NON-SKEWED JOINTS
5/12	C-07.03 SH 7	PCCP JOINT LOCATIONS, MAINLINE NON-SKEWED JOINTS
5/12	C-07.03 SH 8	PCCP JOINT LOCATIONS, MAINLINE NON-SKEWED JOINTS
5/12	C-07.04 SH 1	PCCP JOINT LOCATIONS, PARALLEL TYPE ENTRANCE RAMP WITH AUXILIARY LANE
5/12	C-07.04 SH 2	PCCP JOINT LOCATIONS, PARALLEL TYPE EXIT RAMP WITH AUXILIARY LANE
5/12	C-07.04 SH 3	PCCP JOINT LOCATIONS, TAPER TYPE ENTRANCE RAMP
5/12	C-07.04 SH 4	PCCP JOINT LOCATIONS, TAPER TYPE EXIT RAMP
5/12	C-07.04 SH 5	PCCP JOINT LOCATIONS, CROSSROAD AND RAMP TERMINI
5/12	C-07.06	TRENCH BACKFILL AND PAVEMENT REPLACEMENT
5/12	C-08.20	PAVED GORE AREA
5/12	C-10.00	GUARDRAIL MEASUREMENT LIMITS
5/12	C-10.01	GUARDRAIL INSTALLATION, TYPE A AND REFLECTOR TAB
5/12	C-10.02	GUARDRAIL INSTALLATION, TYPE B AND REFLECTOR TAB
5/12	C-10.03	W-BEAM GUARDRAIL, G4(1W) AND G4(2W), BLOCKED-OUT TIMBER POST
5/12	C-10.04	W-BEAM GUARDRAIL, G4(1S), BLOCKED-OUT STEEL POST
5/12	C-10.05 SH 1	W-BEAM GUARDRAIL, G4(MODIFIED) WITH FREEWAY CURB AND GUTTER
5/12	C-10.05 SH 2	W-BEAM GUARDRAIL, G4(MODIFIED) WITH FREEWAY CURB AND GUTTER
5/12	C-10.06 SH 1	W-BEAM GUARDRAIL, NESTED, TYPES 1 AND 2
5/12	C-10.06 SH 2	W-BEAM GUARDRAIL, NESTED, TYPE 3
5/12	C-10.07 SH 1	W-BEAM GUARDRAIL, BOLTED ANCHOR
5/12	C-10.07 SH 2	W-BEAM GUARDRAIL, BOLTED ANCHOR
5/12	C-10.08	W-BEAM GUARDRAIL, END ANCHOR
5/12	C-10.20	THRIE-BEAM GUARDRAIL, G9, BLOCKED-OUT STEEL POST
5/12	C-10.30 SH 1	GUARDRAIL TRANSITION, THRIE BEAM TO CONCRETE HALF BARRIER, 32" TYPE 'F'
5/12	C-10.30 SH 2	GUARDRAIL TRANSITION, THRIE BEAM TO CONCRETE HALF BARRIER, 32" TYPE 'F'
5/12	C-10.40	CONCRETE MEDIAN BARRIER, 32" TYPE 'F', CAST-IN-PLACE
5/12	C-10.41	CONCRETE MEDIAN BARRIER, 42" TYPE 'F', CAST-IN-PLACE
5/12	C-10.42 SH 1	GLARE SCREEN, CONCRETE MEDIAN BARRIER
5/12	C-10.42 SH 2	GLARE SCREEN, CONCRETE MEDIAN BARRIER
5/12	C-10.42 SH 3	GLARE SCREEN, CONCRETE MEDIAN BARRIER
5/12	C-10.50 SH 1	CONCRETE HALF BARRIER, 32" TYPE 'F', CAST-IN-PLACE
5/12	C-10.50 SH 2	CONCRETE HALF BARRIER, 32" TYPE 'F', PRECAST
5/12	C-10.51	CONCRETE HALF BARRIER, 32" TYPE 'F' WITH SIDEWALK
5/12	C-10.52	CONCRETE HALF BARRIER, 32" TYPE 'F' WITH GUTTER
5/12	C-10.53	CONCRETE HALF BARRIER, 42" TYPE 'F' WITH GUTTER
5/12	C-10.54 SH 1	CONCRETE HALF BARRIER, 32" TYPE 'F' AT PIERS, CAST-IN-PLACE
5/12	C-10.54 SH 2	CONCRETE HALF BARRIER, 32" TYPE 'F' AT PIERS, PRECAST
5/12	C-10.54 SH 3	CONCRETE HALF BARRIER, 32" TYPE 'F' AT PIERS, LAYOUT
5/12	C-10.55 SH 1	CONCRETE HALF BARRIER, 42" TYPE 'F' AT PIERS, CAST-IN-PLACE
5/12	C-10.55 SH 2	CONCRETE HALF BARRIER, 42" TYPE 'F' AT PIERS, PRECAST
5/12	C-10.55 SH 3	CONCRETE HALF BARRIER, 42" TYPE 'F' AT PIERS, LAYOUT
5/12	C-10.70 SH 1	CONCRETE HALF-BARRIER TRANSITION TO VERTICAL, 32" TYPE 'F' WITH CAISSONS
5/12	C-10.70 SH 2	CONCRETE HALF-BARRIER TRANSITION TO VERTICAL, 32" TYPE 'F' WITH CAISSONS
5/12	C-10.70 SH 3	CONCRETE HALF-BARRIER TRANSITION TO VERTICAL, 32" TYPE 'F' WITH CAISSONS
5/12	C-10.71 SH 1	CONCRETE HALF-BARRIER TRANSITION TO VERTICAL, 32" TYPE 'F' WITH CURB & GUTTER
5/12	C-10.71 SH 2	CONCRETE HALF-BARRIER TRANSITION TO VERTICAL, 32" TYPE 'F' WITH CURB & GUTTER
5/12	C-10.72 SH 1	CONCRETE HALF-BARRIER TRANSITION TO VERTICAL, 42" TO 32" TYPE 'F' WITH CAISSONS
5/12	C-10.72 SH 2	CONCRETE HALF-BARRIER TRANSITION TO VERTICAL, 42" TO 32" TYPE 'F' WITH CAISSONS
5/12	C-10.72 SH 3	CONCRETE HALF-BARRIER TRANSITION TO VERTICAL, 42" TO 32" TYPE 'F' WITH CAISSONS
5/12	C-10.73 SH 1	CONCRETE HALF-BARRIER TRANSITION TO VERTICAL, 42" TO 32" TYPE 'F' WITH GUTTER
5/12	C-10.73 SH 2	CONCRETE HALF-BARRIER TRANSITION TO VERTICAL, 42" TO 32" TYPE 'F' WITH GUTTER
5/12	C-10.74	CONCRETE HALF-BARRIER TRANSITION, 42" TO 32" TYPE 'F'
5/12	C-10.75 SH 1	CONCRETE HALF-BARRIER TRANSITION, TYPE 'F', TANGENT DEPARTURE TYPE 1
5/12	C-10.75 SH 2	CONCRETE HALF-BARRIER TRANSITION, TYPE 'F', TANGENT DEPARTURE TYPE 2
5/12	C-10.76	CONCRETE HALF-BARRIER TRANSITION, TYPE 'F' AT RADIUS, 32" TO 0"
5/12	C-10.77	CONCRETE HALF-BARRIER TRANSITION, END TERMINAL CURB AND GUTTER
5/12	C-11.10 SH 1	ROADWAY CATTLE GUARD
5/12	C-11.10 SH 2	ROADWAY CATTLE GUARD
5/12	C-11.10 SH 3	ROADWAY CATTLE GUARD
5/12	C-11.10 SH 4	ROADWAY CATTLE GUARD
5/12	C-11.20	CATTLE GUARD, DRAINAGE
5/12	C-12.10 SH 1	FENCE, WOVEN WIRE
5/12	C-12.10 SH 2	FENCE, BARBED WIRE
5/12	C-12.10 SH 3	FENCE, TYPES 1 AND 2 GATES, FLOOD GATE
5/12	C-12.10 SH 4	FENCE, FLOOD GATE INSTALLATION
5/12	C-12.10 SH 5	FENCE, MISCELLANEOUS DETAILS
5/12	C-12.20 SH 1	FENCE, CHAIN LINK, TYPE 1
5/12	C-12.20 SH 2	FENCE, CHAIN LINK, TYPE 2
5/12	C-12.20 SH 3	FENCE, CHAIN LINK, GATES
5/12	C-12.30 SH 1	FENCE, CHAIN LINK CABLE BARRIER
5/12	C-12.30 SH 2	FENCE, CHAIN LINK CABLE BARRIER
5/12	C-12.30 SH 3	FENCE, CHAIN LINK CABLE BARRIER
5/12	C-13.10 SH 1	PIPE CULVERT INSTALLATION
5/12	C-13.10 SH 2	PIPE CULVERT INSTALLATION
5/12	C-13.15	TYPICAL PIPE INSTALLATION
5/12	C-13.20	PIPE, REINFORCED CONCRETE END SECTION
5/12	C-13.25	PIPE, CORRUGATED METAL END SECTION
5/12	C-13.30	PIPE AND PIPE ARCH, CORRUGATED METAL, CONCRETE INVERT PAVING
5/12	C-13.55	PIPE, CATTLE-VEHICLE PASS, MITERED END TREATMENT
5/12	C-13.60	SLOTTED DRAIN DETAILS
5/12	C-13.65	SLOTTED DRAIN INSTALLATION DETAILS
5/12	C-13.70	STORM DRAIN CONNECTION DETAILS
5/12	C-13.75	STORM DRAIN OUTLET BARRIER GATE
5/12	C-13.76	STORM DRAIN OUTLET AND STORM DRAIN PLUG
5/12	C-13.80	PIPE COLLAR DETAILS
5/12	C-15.10	CATCH BASIN, TYPE 1
5/12	C-15.20 SH 1	CATCH BASIN, TYPE 3
5/12	C-15.20 SH 2	CATCH BASIN, TYPE 3
5/12	C-15.20 SH 3	CATCH BASIN, ACCESS FRAME AND COVER DETAILS
5/12	C-15.30	CATCH BASIN, TYPE 4
5/12	C-15.40 SH 1	CATCH BASIN, TYPE 5
5/12	C-15.40 SH 2	CATCH BASIN, TYPE 5
5/12	C-15.50	CATCH BASIN, FRAME AND GRATE
5/12	C-15.70 SH 1	CATCH BASIN, MISCELLANEOUS DETAILS
5/12	C-15.70 SH 2	CATCH BASIN, MISCELLANEOUS DETAILS
5/12	C-15.75	CATCH BASIN, DROP INLET
5/12	C-15.80	CATCH BASIN, FLUSH
5/12	C-15.81	CATCH BASIN, SIDE SLOPE
5/12	C-15.90	CATCH BASIN, MEDIAN DIKE, PRECAST
5/12	C-15.91 SH 1	FREEWAY CATCH BASIN DETAILS
5/12	C-15.91 SH 2	FREEWAY CATCH BASIN DETAILS
5/12	C-15.92 SH 1	CATCH BASIN WITH TYPE 'F' CONCRETE HALF BARRIER
5/12	C-15.92 SH 2	CATCH BASIN WITH TYPE 'F' CONCRETE HALF BARRIER
5/12	C-16.40	IRRIGATION SLEEVES
5/12	C-17.10	RAIL BANK PROTECTION FOR DRAINAGEWAYS, TYPES 1, 2 & 3
5/12	C-17.15	RAIL BANK PROTECTION AT ABUTMENTS, TYPES 4, 5 & 6
5/12	C-17.20	BANK PROTECTION FOR DRAINAGEWAYS, TYPES 7, 8 & 9
5/12	C-18.10 SH 1	MANHOLE, RISER DETAILS
5/12	C-18.10 SH 2	MANHOLE, BASE DETAILS, NORMAL INSTALLATION
5/12	C-18.10 SH 3	MANHOLE, FRAME AND COVER DETAILS
5/12	C-19.10 SH 1	FORD, CONCRETE WALLS
5/12	C-19.10 SH 2	FORD, TYPES 1 AND 2
5/12	C-21.10	SURVEY MONUMENT FRAME AND COVER
5/12	C-21.20	SURVEY MARKER

REV.: 05/12

ADOT STANDARD DRAWINGS REVISION DATES and STANDARD NO.'s REVIEW		
	NAME	DATE
CONSTRUCTION Standards	CHRIS MILNER	06/2016
PROJECT NO. 010 PM 267 H 8774 01 C	IA OF 82	
RECORD DRAWING DATA / FEDERAL AID NO. 010-E(219)T / RECORD DRAWING DATE	OF	

ADOT STANDARD DRAWINGS

TRAFFIC SIGNING & MARKING STANDARDS
(SHEET 1 OF 2)
EFFECTIVE MAY 2015

REVISION	STANDARD	SUBJECT: SIGNING & MARKING DETAILS
6/14	M-1	CURB MARKINGS FOR RAISED MEDIAN AND ISLANDS
6/14	M-2 SHT 1	INTERSECTION STRIPING
5/15	M-2 SHT 2	INTERSECTION STRIPING (TWO-LANE RURAL)
6/14	M-2 SHT 3	CENTERLINE & REVERSE CURVE DETAILS
6/14	M-3	STRIPING AND DELINEATION FOR FREEWAY TERMINALS
6/14	M-4	PASSING LANE STRIPING DETAILS
6/14	M-5	RAILROAD PAVEMENT MARKINGS
6/14	M-6	WORD MARKINGS
6/14	M-7	PAVEMENT LETTERS
6/14	M-8	PAVEMENT LETTERS
6/14	M-9	PAVEMENT NUMBERS
6/14	M-10 SHT 1	PAVEMENT MARKING SYMBOLS
6/14	M-10 SHT 2	PAVEMENT MARKING SYMBOLS
6/14	M-11	TURN LANE PAVEMENT MARKINGS
6/14	M-12	WRONG-WAY ARROWS
6/14	M-13	PREFERENTIAL LANE PAVEMENT MARKINGS
6/14	M-14	STRIPING AND DELINEATION FOR TRUCK ESCAPE RAMPS
6/14	M-15 SHT 1	PAVEMENT MARKING FOR FREEWAY ENTRANCE RAMP - TAPERED ACCELERATION LANE
6/14	M-15 SHT 2	PAVEMENT MARKING FOR FREEWAY ENTRANCE RAMP - PARALLEL ACCELERATION LANE
6/14	M-15 SHT 3	PAVEMENT MARKING FOR FREEWAY ENTRANCE RAMP - PARALLEL ACCELERATION LANE WITH HOV BYPASS
6/14	M-15 SHT 4	PAVEMENT MARKING FOR FREEWAY PARALLEL - ACCELERATION LANE
6/14	M-16 SHT 1	PAVEMENT MARKING FOR FREEWAY EXIT RAMPS - TAPERED DECELERATION LANE
6/14	M-16 SHT 2	PAVEMENT MARKING FOR FREEWAY EXIT RAMP - PARALLEL DECELERATION LANE
5/15	M-17	FREEWAY LANE DROP PAVEMENT MARKINGS
6/14	M-18	RECESSED PAVEMENT MARKER DETAILS
6/14	M-19 SHT 1	RAISED PAVEMENT MARKER PLAN LEGEND
6/14	M-19 SHT 2	NON-REFLECTIVE RAISED PAVEMENT MARKER DETAILS
6/14	M-19 SHT 3	RETROREFLECTIVE RAISED PAVEMENT MARKER DETAILS
6/14	M-19 SHT 4	RETROREFLECTIVE RAISED PAVEMENT MARKER DETAILS
5/15	M-19 SHT 5	PAVEMENT MARKING DETAILS FOR UNDIVIDED HIGHWAYS
6/14	M-19 SHT 6	RETROREFLECTIVE RAISED PAVEMENT MARKERS (RPM) FOR UNDIVIDED HIGHWAYS
6/14	M-19 SHT 7	FREEWAY AND DIVIDED HIGHWAY EDGE LINE AND LANE STRIPING
5/15	M-19 SHT 8	LANE DROP MARKING AND RAMP OR INTERSECTION GUIDE STRIPING
6/14	M-19 SHT 9	PAVEMENT MARKING CROSS-SECTION DETAILS FOR HIGHWAYS AND FREEWAYS

REVISION	STANDARD	SUBJECT: SIGNING & MARKING DETAILS
6/14	M-20 SHT 1	CHIP SEAL MARKER USAGE FOR TEMPORARY MARKERS
6/14	M-20 SHT 2	CHIP SEAL MARKER USAGE FOR TEMPORARY MARKERS
6/14	M-21	TRANSVERSE RUMBLE STRIP DETAILS
6/14	M-22 SHT 1	LONGITUDINAL RUMBLE STRIP GROOVE, PATTERN - AND LOCATION DETAILS
6/14	M-22 SHT 2	LONGITUDINAL RUMBLE STRIP EXCEPTION DETAILS
6/14	M-22 SHT 3	CENTERLINE RUMBLE STRIP GROOVE, PATTERN - AND LOCATION DETAILS
6/14	M-23	OBJECT MARKER DETAILS
6/14	M-24	OBJECT MARKER PLACEMENT DETAILS
6/14	M-26 SHT 1	DELINEATOR PLACEMENT AND SPACING
6/14	M-26 SHT 2	DELINEATOR PLACEMENT AND SPACING
6/14	M-26 SHT 3	FLEXIBLE DELINEATOR ASSEMBLIES
6/14	M-26 SHT 4	SQUARE STEEL POST DELINEATOR
6/14	M-26 SHT 5	DELINEATOR FOUNDATION DETAILS
6/14	M-27	DELINEATION DETAILS FOR MEDIAN CROSSOVERS
6/14	M-29	OFF-MAINLINE REFERENCE MARKER LOCATION DETAIL
6/14	M-30	OFF-MAINLINE REFERENCE MARKER DETAILS
6/14	M-32	BRIDGE AND BARRIER MARKER DETAILS
6/14	M-33	BRIDGE & BARRIER MARKER PLACEMENT AND INSTALLATION DETAILS
6/14	M-34	GUARDRAIL END TERMINAL DELINEATION DETAILS
6/14	M-35	OBJECT MARKER FOR SAND BARREL CRASH CUSHION

NO.	DESCRIPTION OF REVISION	MADE BY	DATE
NO.1	REVISED ALL DRAWINGS AND RE-ISSUED, CREATED SHEET 2.	L. LOPEZ	5/15
NO.2	REVISED M-2 SHT1, M-11, M-19 SHT5, SHA, REVISED C-7 SHT1 ON PDG, UPDATED BORDER TITLE BLOCK.	L. LOPEZ	6/14

ADOT STANDARD DRAWINGS
REVISION DATES and STANDARD NO.'s REVIEW

	NAME	DATE
SIGNING & MARKING STANDARDS	CHRIS MILNER	06/2016

PROJECT NO.			
010 PM 267 H 8774 01 C	1B-1	OF	82
RECORD DRAWING DATA / FEDERAL AID NO. 010-E(219)T	REC. DWG. DATE	OF	

ADOT STANDARD DRAWINGS

TRAFFIC SIGNING & MARKING STANDARDS
(SHEET 2 OF 2)
EFFECTIVE MAY 2015

REVISION	STANDARD	SUBJECT: SIGNING & MARKING DETAILS
6/14	S-1 SHT 1	GENERAL SIGNING NOTES
6/14	S-2 SHT 1	S & W BREAKAWAY POST SELECTION CHART
6/14	S-2 SHT 2	S & W BREAKAWAY POST INSTALLATION DETAILS
6/14	S-3 SHT 1	FLAT SHEET SIGNS SQUARE TUBE POST GENERAL NOTES
6/14	S-3 SHT 2	SINGLE POST FLAT SHEET RECTANGULAR SIGN ASSEMBLY - 12, 18 AND 24 INCH WIDTHS
6/14	S-3 SHT 3	SINGLE POST FLAT SHEET RECTANGULAR SIGN ASSEMBLY - 30, 36, 42 AND 54 INCH WIDTHS
6/14	S-3 SHT 4	TWO POST FLAT SHEET RECTANGULAR SIGN ASSEMBLY - 36, 42 AND 48 INCH WIDTHS
6/14	S-3 SHT 5	TWO POST FLAT SHEET RECTANGULAR SIGN ASSEMBLY - 54, 60 AND 72 INCH WIDTHS
6/14	S-3 SHT 6	TWO POST FLAT SHEET RECTANGULAR SIGN ASSEMBLY - 84 - 144 INCH WIDTHS
6/14	S-3 SHT 7	THREE POST FLAT SHEET RECTANGULAR SIGN ASSEMBLY - 48, 60 AND 72 INCH WIDTHS
6/14	S-3 SHT 8	THREE POST FLAT SHEET RECTANGULAR SIGN ASSEMBLY - 84 - 144 INCH WIDTHS
6/14	S-3 SHT 9	WARNING SIGN ASSEMBLY - SINGLE POST
6/14	S-3 SHT 10	WARNING SIGN ASSEMBLY - TWO POST
6/14	S-3 SHT 11	WARNING SIGN ASSEMBLY - THREE POST
6/14	S-3 SHT 12	MULTIPLE ROUTE MARKER ASSEMBLIES
6/14	S-3 SHT 13	SPECIAL SIGN ASSEMBLIES
6/14	S-3 SHT 14	STRINGER DETAILS FOR SQUARE TUBE POSTS
6/14	S-3 SHT 15	SQUARE TUBE SIGN POST FOUNDATION
6/14	S-3 SHT 16	SQUARE TUBE POST SLIP BASE DETAILS
6/14	S-4	W SHAPE BREAKAWAY POST FUSE PLATE AND HINGE DETAILS
6/14	S-5	W SHAPE BREAKAWAY POST DETAILS
6/14	S-6	S4x7.7 BREAKAWAY POST DETAILS
6/14	S-7 SHT 1	ALUMINUM EXTRUSION SIGN PANEL DETAILS
6/14	S-7 SHT 2	ALUMINUM EXTRUSION AUXILIARY SIGN INSTALLATION DETAILS
5/15	S-7 SHT 3	ALUMINUM EXTRUSION EXIT PANEL INSTALLATION DETAIL
6/14	S-8 SHT 1	FLAT SHEET ALUMINUM PANEL ON BREAKAWAY POSTS INSTALLATION DETAIL
6/14	S-8 SHT 2	ALUMINUM EXTRUSION SIGN TO PERFORATED POSTS INSTALLATION DETAIL
6/14	S-9 SHT 1	SIGN INSTALLATION ON POLE
6/14	S-9 SHT 2	SIGN INSTALLATION ON SIGNAL POLE
6/14	S-9 SHT 3	SIGN INSTALLATION ON POLE BAND-TYPE CLAMP
6/14	S-10	MILEPOST AND REFERENCE LOCATION SIGNS
6/14	S-11 SHT 1	TAPERED TUBE SIGN STRUCTURE CANTILEVER
6/14	S-11 SHT 2	TAPERED TUBE SIGN STRUCTURE CANTILEVER POST AND MAST ARM DETAILS
6/14	S-11 SHT 3	TAPERED TUBE SIGN STRUCTURE SINGLE BEAM
6/14	S-11 SHT 4	TAPERED TUBE SIGN STRUCTURE SINGLE BEAM POST AND BEAM DETAILS

REVISION	STANDARD	SUBJECT: SIGNING & MARKING DETAILS
6/14	S-12 SHT 1	TYPE A, B, AND DOWN ARROWS
6/14	S-12 SHT 2	TYPE C AND D ARROWS
6/14	S-12 SHT 3	C2 ARROW DETAIL
6/14	S-13	SIGN IDENTIFICATION DETAILS
6/14	S-14 SHT 1	ROTATING OPEN/CLOSED SIGN
6/14	S-14 SHT 2	ROTATING OPEN/CLOSED SIGN DETAILS
6/14	S-14 SHT 3	ROTATING OPEN/CLOSED SIGN MOUNTING DETAILS
6/14	S-15 SHT 1	FOLDING RECTANGULAR SIGN ASSEMBLY
6/14	S-15 SHT 2	FOLDING RECTANGULAR SIGN OPERATION
6/14	S-15 SHT 3	FOLDING DIAMOND SIGN ASSEMBLY
6/14	S-16 SHT 1	TEMPORARY WOOD POSTS
6/14	S-16 SHT 2	TEMPORARY WOOD POSTS SELECTION CHART
6/14	S-17	END OF ROAD BARRICADE
6/14	C-1	SAND BARREL CRASH CUSHION
6/14	C-2	SAND BARREL CRASH CUSHION TYPICAL INSTALLATION
6/14	C-3 SHT 1	PRECAST CONCRETE BARRIER STRUCTURAL DETAILS
6/14	C-3 SHT 2	PRECAST CONCRETE BARRIER PIN AND LOOP ASSEMBLY
6/14	C-4 SHT 1	MEDIAN CROSSOVER
6/14	C-4 SHT 2	TYPICAL END TREATMENTS FOR DETOURS USING TEMPORARY CONCRETE BARRIER (TCB)
6/14	C-5 SHT 1	APPROACH PLATE AND TRANSITION SECTION FOR TEMPORARY CONCRETE BARRIER
6/14	C-5 SHT 2	APPROACH PLATE AND TRANSITION SECTION FOR TEMPORARY CONCRETE BARRIER

NO.	DESCRIPTION OF REVISION	MADE BY	DATE
NO.1	REVISED ALL DRAWINGS AND RE-ISSUED, CREATED SHEET 2.	L. LOPEZ	6/14
NO.2	REVISED S-1 SHT1, REVISED W-2 SHT2, W-13, W-16 SHTS S&W ON POL, UPDATED BORDER TITLE BLOCK.	L. LOPEZ	5/15

ADOT STANDARD DRAWINGS
REVISION DATES and STANDARD NO.'s REVIEW

	NAME	DATE
SIGNING & MARKING STANDARDS	CHRIS MILNER	06/2016

PROJECT NO. 010 PM 267 H 8774 01 C — 1B-2 OF 82

RECORD DRAWING DATA — FEDERAL AID NO. 010-E(219)T — REC. DWG. DATE — OF

1:30:22 PM 6/16/2016 T:\Tempe\Projects\221867.00\600_CADD\05_Official\Delv Files\Cover\H8774fs.dgn

ADOT STANDARD DRAWINGS

TRAFFIC SIGNAL AND LIGHTING STANDARDS
(SHEET 1 OF 2)
EFFECTIVE MAY 2015

REVISION DATE	STANDARD NUMBER		SUBJECT: TRAFFIC SIGNALS AND LIGHTING DETAILS
	T.S. 0		**ABBREVIATIONS, SYMBOLS AND DEFINITIONS**
05/15	0-1		STANDARD ABBREVIATIONS
01/12	0-2	SHT 1	PLAN SYMBOLS
01/12	0-2	SHT 2	PLAN SYMBOLS
01/12	0-2	SHT 3	PLAN SYMBOLS
03/10	0-3	SHT 1	STANDARD DEFINITIONS
03/10	0-3	SHT 2	STANDARD DEFINITIONS
03/10	0-4		REFERENCE DOCUMENTS AND GENERAL REQUIREMENTS
	T.S. 1		**PULL BOXES**
09/11	1-1	SHT 1	LIGHT DUTY - LIGHT WEIGHT NO. 5 AND NO. 7 PULL BOX
09/11	1-1	SHT 2	LIGHT DUTY - LIGHT WEIGHT NO. 5 AND NO. 7 SLOPE WALL BODY PULL BOX DETAILS
03/15	1-2		HEAVY DUTY NO. 5 AND NO. 7 STRAIGHT BODY WALL PULL BOX DETAILS
09/11	1-3		REPLACEMENT LID SIZING FOR EXISTING NO. 5 AND NO. 7 PULL BOXES
09/11	1-4	SHT 1	TYPICAL PULL BOX INSTALLATION AND WIRING DETAILS
09/11	1-4	SHT 2	TYPICAL PULL BOX INSTALLATION AND WIRING DETAILS
09/11	1-4	SHT 3	TYPICAL PULL BOX INSTALLATION DETAILS
09/11	1-5	SHT 1	ELECTRICAL CONDUIT COVER AND TRENCH REQUIREMENTS
09/11	1-5	SHT 2	CONDUIT EXPANSION COUPLINGS
09/11	1-6		CONDUCTOR REQUIREMENTS
03/10	1-7		TRAFFIC SIGNAL IMSA CABLE COLOR CODES
09/11	1-8	SHT 1	FRONT OF BARRIER JUNCTION BOX
09/11	1-8	SHT 2	BACK OF BARRIER JUNCTION BOX
09/11	1-9		TOP OF BARRIER JUNCTION BOX DETAILS
09/11	1-10		TOP OF BARRIER JUNCTION BOX DETAILS
10/13	1-11	SHT 1	HEAVY DUTY LIGHTING NO. 4 AND NO. 6 PULL BOX
10/13	1-11	SHT 2	HEAVY DUTY LIGHTING NO. 4 AND NO. 6 PULL BOX
03/15	1-11	SHT 3	HEAVY DUTY LIGHTING NO. 4 AND NO. 6 PULL BOX LID
03/15	1-12	SHT 1	PRECAST HEAVY DUTY LIGHTING NO. 4B AND NO. 6B PULL BOX
03/15	1-12	SHT 2	PRECAST HEAVY DUTY LIGHTING NO. 4B AND NO. 6B PULL BOX
	T.S. 2		**FOUNDATIONS**
03/10	2-1		FOUNDATION FOR TYPE II LOAD CENTER CABINET
03/10	2-2		FOUNDATION FOR TYPE IV LOAD CENTER CABINET
03/10	2-3		FOUNDATION FOR TYPE III CONTROL CABINET
03/10	2-4		FOUNDATION FOR TYPE IV AND V CONTROL CABINETS
03/10	2-5		FOUNDATION FOR TYPE 340 CONTROL CABINET
03/10	2-6		METER PEDESTAL CABINET FOUNDATION AND BASE
03/15	2-7		TRAFFIC SIGNAL UPS CABINET FOUNDATION DETAIL
	T.S. 3		**CABINETS**
12/12	3-0		NOTES FOR TYPE II AND IV LOAD CENTER CABINETS
03/10	3-1		TYPE II LOAD CENTER CABINET
03/10	3-2		TYPE IV LOAD CENTER CABINET
03/10	3-3		TYPE II OR IV LOAD CENTER CABINET WIRING DETAILS 240/480 3W W/DISCONNECT
03/10	3-4	SHT 1	PHOTO ELECTRIC CELL MOUNTING DETAILS
03/10	3-4	SHT 2	PHOTO ELECTRIC CELL MOUNTING DETAILS
03/10	3-5	SHT 1	TYPE I AND II METER PEDESTAL CABINET
12/12	3-5	SHT 2	METER PEDESTAL CABINET
03/10	3-6		TYPE III CONTROL CABINET
03/10	3-7		POLE MOUNTED TYPE III CONTROL CABINET
03/10	3-8	SHT 1	POLE MOUNT DETAILS FOR TYPE III CONTROL CABINET
03/10	3-8	SHT 2	POLE MOUNT DETAILS FOR TYPE III CONTROL CABINET
03/10	3-9	SHT 1	TYPE IV AND V CONTROL CABINET NOTES
03/10	3-9	SHT 2	TYPE IV CONTROL CABINET
03/10	3-9	SHT 3	TYPE V CONTROL CABINET
03/10	3-10		CABINET EXTENSION OR ELEVATOR BASE
03/10	3-11		CONTROL CABINET MOUNTED SERVICE ENCLOSURE
03/10	3-12	SHT 1	120/240 OR 240/480 VOLT, SINGLE PHASE UTILITY PULL SECTION AND SERVICE DISCONNECT DETAILS
03/10	3-12	SHT 2	120/240 OR 240/480 VOLT, SINGLE PHASE UTILITY PULL SECTION AND SERVICE DISCONNECT DETAILS
03/10	3-13	SHT 1	TRAFFIC SIGNALS AND LIGHTING MODEL 345 CABINET DETAILS
03/10	3-13	SHT 2	TRAFFIC SIGNALS AND LIGHTING MODEL 345 CABINET DETAILS
03/10	3-13	SHT 3	TRAFFIC SIGNALS AND LIGHTING MODEL 345 CABINET CAGE DETAILS

REVISION DATE	STANDARD NUMBER		SUBJECT: TRAFFIC SIGNALS AND LIGHTING DETAILS
	T.S. 4		**POLES AND POSTS**
10/13	4-1		TYPE "A" POLE
10/13	4-2		TYPE "E" POLE
10/13	4-3		TYPE "F" POLE
10/13	4-4		TYPE "G" POLE
10/13	4-5		ALUMINUM TYPE "G" POLE
10/13	4-6		ALUMINUM TYPE "H" POLE
10/13	4-7		ALUMINUM TYPE "I" POLE
10/13	4-8		TYPE "J" POLE
10/13	4-9		TYPE "K" POLE
10/13	4-10		TYPE "Q" POLE
10/13	4-11		TYPE "R" POLE
10/13	4-12		TYPE "S" POLE
10/13	4-13		ALUMINUM TYPE "S" POLE
10/13	4-14	SHT 1	TYPE "T" POLE
10/13	4-14	SHT 2	TYPE "S" AND "T" STEEL TWIN LUMINAIRE MOUNTING BRACKET AND EXTENSIONS
10/13	4-15		ALUMINUM TYPE "T" POLE
10/13	4-16		TYPE "U" POLE ELLIPTICAL BASE DETAILS
10/13	4-17	SHT 1	TYPE "U" POLE SQUARE BASE
10/13	4-17	SHT 2	TYPE "U" POLE ROUND POLE / SQUARE BASE
03/10	4-17	SHT 3	TYPE "U" POLE ROUND POLE / SQUARE BASE
10/13	4-17	SHT 4	TYPE "U" POLE ROUND POLE / SQUARE BASE
10/13	4-17	SHT 5	TYPE "U" POLE ROUND POLE / SQUARE BASE
10/13	4-17	SHT 6	TYPE "U" POLE ROUND POLE / SQUARE BASE
10/13	4-18		TYPE "V" POLE AND 60' OR 65' MAST ARM
10/13	4-19		TYPE "W" POLE AND 60' OR 65' MAST ARM
03/10	4-20		POLE HAND HOLE DETAIL
03/10	4-21		EQUIPMENT MOUNTING HEIGHT DETAILS
03/15	4-22		PEDESTRIAN PUSH BUTTON POST "TYPE PB POLE"
10/13	4-23		POLE FOUNDATION ANCHOR BOLTS
03/10	4-26		STEEL MAST ARM DETAILS LUMINAIRE AND SIGNAL ARMS TO 20'
03/10	4-27		ALUMINUM TRUSS ARM DETAILS TYPE G, H, AND I POLES
03/10	4-28		SIGNAL MAST ARM CONNECTION DETAIL TYPE J AND Q POLES
03/10	4-29		SIGNAL MAST ARM CONNECTION DETAIL TYPE K AND R POLES
03/10	4-30		MAST ARM CONNECTION DETAIL TYPE V AND W POLES
03/10	4-31		SIGNAL MAST ARM TENON DETAIL
12/12	4-32		TYPICAL HIGHWAY LIGHTING OFFSETS IN CUT AND FILL SECTIONS
	T.S. 5		**POLE BASES - SPECIAL**
03/15	5-0		TYPE 2 AND 3 CAST ALUMINUM BREAK-AWAY BASES
12/12	5-1		TYPE 2 CAST ALUMINUM BREAK-AWAY BASE
12/12	5-2		TYPE 3 CAST ALUMINUM BREAK-AWAY BASE
12/12	5-3		INSTALLATION DETAILS FOR POLE FOUNDATIONS WITH TYPE 2 AND 3 BREAK-AWAY BASES
	T.S. 6		**HIGHWAY TRAFFIC DATA DETECTORS**
03/10	6-1		TYPE C VEHICLE DETECTOR LOOPS FOR TRAFFIC COUNTERS
03/10	6-2	SHT 1	TYPE SA AND SB SPEED/VEHICLE CLASSIFICATION SYSTEMS
03/10	6-2	SHT 2	TYPE SA SPEED/VEHICLE CLASSIFICATION SYSTEMS
03/10	6-2	SHT 3	TYPE SB SPEED/VEHICLE CLASSIFICATION SYSTEMS
12/12	6-3		PIEZOELECTRIC WEIGHT SENSOR AND LOOP LANE LAYOUT
12/12	6-4	SHT 1	DETECTOR LOOPS AND PIEZOELECTRIC SENSOR DETAILS
12/12	6-4	SHT 2	DETECTOR LOOPS AND PIEZOELECTRIC SENSOR DETAILS
03/15	6-4	SHT 3	DETAIL A PIEZOELECTRIC SENSOR DETAILS
12/12	6-4	SHT 4	DETAIL B DETECTOR LOOP DETAILS
12/12	6-4	SHT 5	DETECTOR LOOPS AND PIEZOELECTRIC SENSOR DETAILS
03/10	6-5		MICROLOOPS FOR SPEED/VEHICLE CLASSIFICATION
03/10	6-6		QUARTZ PIEZOELECTRIC WEIGHT SENSOR AND LOOP LANE LAYOUT
03/10	6-7		TRAFFIC DATA COLLECTION CABINET INSTALLATION DETAILS
03/10	6-8		TYPE MPD CABINET POLE, BASE AND FOUNDATION INSTALLATION DETAILS

NO.1	DESCRIPTION OF REVISION	NO.2	DESCRIPTION OF REVISION	MADE BY	DATE	MADE BY	DATE
	REVISED STDS 1-2, 1-11, 2-7, 4-22, 5-0, 5-4.		REVISED TS 0-1, UPDATED BORDER TITLE BLOCK.	L. LOPEZ	03/15	L. LOPEZ	05/15

ADOT STANDARD DRAWINGS
REVISION DATES and STANDARD NO.'s REVIEW

	NAME	DATE
TRAFFIC SIGNAL & LIGHTING STANDARDS	CHRIS MILNER	06/2016

PROJECT NO. 010 PM 267 H 8774 01 C — 1C-1 OF 82

RECORD DRAWING DATA — FEDERAL AID NO. 010-E(219)T — REC. DWG. DATE — OF

1:30:22 PM 6/16/2016 T:\Tempe\Projects\221867.00\600_CADD\05_Official\Delv Files\Cover\H8774fs.dgn

ADOT STANDARD DRAWINGS

TRAFFIC SIGNAL AND LIGHTING STANDARDS
(SHEET 2 OF 2)
EFFECTIVE MAY 2015

REVISION DATE	STANDARD NUMBER	SUBJECT: TRAFFIC SIGNALS AND LIGHTING DETAILS
	T.S. 7	**TRAFFIC SIGNAL DETECTORS**
03/10	7-1 SHT 1	LOOP DETECTOR LOCATION SAWCUT PATTERNS AND INSTALLATION DETAILS
03/10	7-1 SHT 2	SAW CUT AND CORING DETAILS
03/15	7-1 SHT 3	SAW CUT AND CORING DETAILS
03/10	7-1 SHT 4	TYPICAL DETECTOR LOOP LEAD-IN ROAD TO PULL BOX DETAIL
03/10	7-1 SHT 5	LOOP DETECTOR LOCATION AND INSTALLATION DETAILS
03/10	7-2	PRE-FORMED LOOP DETECTORS FOR RAMP METERING AND COUNTING
03/10	7-3	PRE-FORMED LOOP DETECTORS IN BRIDGE DECK
03/10	7-4	PRE-FORMED LOOP DETECTORS IN PCCP
03/10	7-5	TYPICAL PRE-FORMED LOOP DETECTOR STUB-OUT DETAIL
	T.S. 8	**SIGNAL ASSEMBLIES**
01/12	8-0	TRAFFIC SIGNAL VEHICLE FACE ASSEMBLY REQUIREMENTS AND DETAILS
01/12	8-1	VEHICLE TRAFFIC SIGNAL FACE ASSEMBLY
01/12	8-2	VEHICLE TRAFFIC SIGNAL FACE ASSEMBLY
01/12	8-3	VEHICLE TRAFFIC SIGNAL FACE ASSEMBLY
10/13	8-4 SHT 1	12-INCH VEHICLE TRAFFIC SIGNAL HOUSING/SECTION
01/12	8-4 SHT 2	12-INCH VEHICLE TRAFFIC SIGNAL HOUSING/SECTION NOTES
01/12	8-4 SHT 3	VEHICLE TRAFFIC SIGNAL HOUSING/SECTION DETAILS
03/10	8-4 SHT 4	VISORS FOR 8-INCH AND 12-INCH VEHICLE TRAFFIC SIGNAL FACE ASSEMBLIES
01/12	8-5	FLASHING BEACON SIGNAL FACE ASSEMBLY
01/12	8-6	LED LAMP FOR PROGRAMMED VISIBILITY SIGNAL
01/12	8-7 SHT 1	PEDESTRIAN SIGNAL ASSEMBLY REQUIREMENTS AND DETAILS
01/12	8-7 SHT 2	PEDESTRIAN SIGNAL ASSEMBLY HOUSING
01/12	8-7 SHT 3	PEDESTRIAN SIGNAL ASSEMBLY VISOR
	T.S. 9	**MOUNTING ASSEMBLIES - SIGNAL**
03/10	9-0 SHT 1	MOUNTING ASSEMBLY GENERAL REQUIREMENTS
03/10	9-0 SHT 2	MOUNTING ASSEMBLY GENERAL REQUIREMENTS
03/10	9-1	TYPE I AND II MOUNTING ASSEMBLIES
03/10	9-2	TYPE III AND IV MOUNTING ASSEMBLIES
10/13	9-3	TYPE V MOUNTING ASSEMBLY
03/10	9-4	TYPE VI MOUNTING ASSEMBLY
03/10	9-5	TYPE VII MOUNTING ASSEMBLY
03/10	9-6	TYPE VIII MOUNTING ASSEMBLY
03/10	9-7	TYPE IX MOUNTING ASSEMBLY
03/10	9-8	TYPE X MOUNTING ASSEMBLY
03/10	9-9	TYPE XI MOUNTING ASSEMBLY
	T.S. 10	**MOUNTING CASTINGS - SIGNAL**
03/10	10-1	MISCELLANEOUS SIGNAL MOUNTING PARTS
03/10	10-2	MAST ARM SIGNAL MOUNTING PLUMBIZER
03/10	10-3	SIGNAL MOUNTING POLE PLATE DETAILS
03/10	10-4	TERMINAL COMPARTMENT, SIDE MOUNTED AND POLE TOP MOUNTED
	T.S. 11	**PEDESTRIAN DETAILS**
03/15	11-1	TYPE I PEDESTRIAN PUSH BUTTON HOUSING ASSEMBLY
03/15	11-2	CAN STYLE PEDESTRIAN PUSH BUTTON
	T.S. 12	**FLASHERS**
03/10	12-1 SHT 1	ADVANCE WARNING FLASHER POLE DETAIL
03/10	12-1 SHT 2	ADVANCE WARNING FLASHER POLE SIGN MOUNTING DETAILS
03/10	12-1 SHT 3	ADVANCE WARNING FLASHER POLE DETAIL
	T.S. 13	**ILLUMINATION - SIGNS**
03/10	13-1	SIGN LIGHTING DETAIL FOR TUBULAR SIGN STRUCTURES
03/10	13-2	FUSE PANEL DETAILS FOR SIGN LIGHTING
03/15	13-3	PLACEMENT OF LIGHTING FIXTURES FOR OVERHEAD SIGNS
	T.S. 14	**ILLUMINATION - SPECIAL**
03/10	14-1 SHT 1	HIGH PRESSURE SODIUM (HPS) LAMPS
03/10	14-1 SHT 2	HIGH PRESSURE SODIUM (HPS) LAMPS
03/10	14-1 SHT 3	HIGH PRESSURE SODIUM (HPS) LAMPS
03/10	14-2	PEDESTRIAN BRIDGE LIGHTING DETAILS

REVISION DATE	STANDARD NUMBER	SUBJECT: TRAFFIC SIGNALS AND LIGHTING DETAILS
	T.S. 15	**SPAN WIRE SIGNALS AND LIGHTING**
01/12	15-0 SHT 1	GENERAL NOTES
01/12	15-0 SHT 2	GENERAL NOTES
01/12	15-0 SHT 3	GENERAL NOTES
01/12	15-1 SHT 1	STEEL POLE TYPICAL DETAILS
01/12	15-1 SHT 2	STEEL POLE FOUNDATION DETAILS
01/12	15-1 SHT 3	STEEL POLE ATTACHMENT DETAILS
01/12	15-1 SHT 4	WOOD POLE TYPICAL DETAILS
01/12	15-1 SHT 5	WOOD POLE TYPICAL DETAILS
01/12	15-1 SHT 6	TYPICAL DETAILS
01/12	15-2	HANGER AND BALANCE ADJUSTER TYPICAL DETAILS
01/12	15-3 SHT 1	SIGNAL ASSEMBLY DETAILS
01/12	15-3 SHT 2	CONDUCTOR ENTRANCE HEADS TYPE A, B AND C
01/12	15-3 SHT 3	ALUMINUM PIPE EXTENSION AND TYPICAL DETAILS
01/12	15-4 SHT 1	ADJUSTABLE SIGN HANGER TYPICAL DETAILS
01/12	15-4 SHT 2	ADJUSTABLE SIGN HANGER TYPICAL DETAILS
01/12	15-4 SHT 3	ADJUSTABLE SIGN HANGER TYPICAL DETAILS
01/12	15-5	ADJUSTABLE HANGER TOP AND EXTENSION DETAILS
01/12	15-6	SIGNAL TETHER CLAMP TYPICAL DETAILS
01/12	15-7	POLE BAND TYPICAL DETAILS
01/12	15-8	WEATHERHEAD TYPICAL DETAILS

NO.	DESCRIPTION OF REVISION	MADE BY	DATE
NO.1	REVISED STDS 7-1, 11-1, 11-2, 13-3. ADDED NEW STD 1-12.	L. LOPEZ	3/15
NO.2	REVISED TS 0-1 ON SHT1. UPDATED BORDER TITLE BLOCK.	L. LOPEZ	5/15

ADOT STANDARD DRAWINGS
REVISION DATES AND STANDARD NO.'s REVIEW

	NAME	DATE
TRAFFIC SIGNAL AND LIGHTING STANDARDS	CHRIS MILNER	06/2016

PROJECT NO. 010 PM 267 H 8774 01 C — 1C-2 OF 82

RECORD DRAWING DATA — FEDERAL AID NO. 010-E(219)T — REC. DWG. DATE ____ OF ____

ADOT STANDARD DRAWINGS

STRUCTURE DETAIL DRAWINGS

REVISION DATE	SD NUMBER	SUBJECT
RAILINGS		
6/12	SD 1.01	F-SHAPE BRIDGE CONCRETE BARRIER AND TRANSITION (34")
6/12	SD 1.02	F-SHAPE BRIDGE CONCRETE BARRIER AND TRANSITION (44")
6/12	SD 1.03	THRIE BEAM GUARD RAIL TRANSITION SYSTEM
3/09	SD 1.04	COMBINATION PEDESTRIAN-TRAFFIC BRIDGE RAILING
3/09	SD 1.05	PEDESTRIAN FENCE FOR BRIDGE RAILING SD1.04
6/09	SD 1.06 (1 OF 4)	TWO TUBE BRIDGE RAIL
6/09	SD 1.06 (2 OF 4)	TWO TUBE BRIDGE RAIL
6/09	SD 1.06 (3 OF 4)	TWO TUBE BRIDGE RAIL
6/09	SD 1.06 (4 OF 4)	TWO TUBE BRIDGE RAIL
4/10	SD 1.11	BARRIER JUNCTION BOX
APPROACHES		
12/07	SD 2.01	APPROACH SLAB DETAILS
12/07	SD 2.02	TYPE 1 ANCHOR SLAB DETAILS
12/07	SD 2.03	TYPE 2 ANCHOR SLAB DETAILS
9/09	SD 2.04	SLOPE PAVING DETAILS
DECK JOINTS		
6/09	SD 3.01	DECK JOINT ASSEMBLY - COMPRESSION SEAL
12/09	SD 3.02	DECK JOINT ASSEMBLY - STRIP SEAL
12/09	SD 3.03	DECK JOINT ASSEMBLY - RAISED STRIP SEAL
SUBSTRUCTURE		
11/12	SD 5.01	STRUCTURAL EXCAVATION - PAYMENT LIMITS
11/12	SD 5.02	STRUCTURE BACKFILL - PAYMENT LIMITS
DRAINAGE STRUCTURES		
5/15	SD 6.01 (1 OF 5)	REINFORCED CONCRETE BOX CULVERTS - MISCELLANEOUS DETAILS
2/12	SD 6.01 (2 OF 5)	REINFORCED CONCRETE BOX CULVERTS - MISCELLANEOUS DETAILS
2/12	SD 6.01 (3 OF 5)	REINFORCED CONCRETE BOX CULVERTS - EXTENSION DETAILS
2/12	SD 6.01 (4 OF 5)	REINFORCED CONCRETE BOX CULVERTS - STRUCTURAL EXCAVATION & STRUCTURE BACKFILL
5/15	SD 6.01 (5 OF 5)	REINFORCED CONCRETE BOX CULVERTS - SINGLE BARREL (0'-30' FILLS)
5/15	SD 6.02 (1 OF 2)	REINFORCED CONCRETE BOX CULVERTS - DOUBLE BARREL (0'-15' FILLS)
5/15	SD 6.02 (2 OF 2)	REINFORCED CONCRETE BOX CULVERTS - DOUBLE BARREL (15'-30' FILLS)
5/15	SD 6.03 (1 OF 2)	REINFORCED CONCRETE BOX CULVERTS - TRIPLE BARREL (0'-15' FILLS)
5/15	SD 6.03 (2 OF 2)	REINFORCED CONCRETE BOX CULVERTS - TRIPLE BARREL (15'-30' FILLS)
5/15	SD 6.04 (1 OF 2)	REINFORCED CONCRETE BOX CULVERTS - FOUR BARREL (0'-15' FILLS)
5/15	SD 6.04 (2 OF 2)	REINFORCED CONCRETE BOX CULVERTS - FOUR BARREL (15'-30' FILLS)
5/15	SD 6.05 (1 OF 2)	REINFORCED CONCRETE BOX CULVERTS - FIVE BARREL (0'-15' FILLS)
5/15	SD 6.05 (2 OF 2)	REINFORCED CONCRETE BOX CULVERTS - FIVE BARREL (15'-30' FILLS)
5/15	SD 6.06 (1 OF 2)	REINFORCED CONCRETE BOX CULVERTS - SIX BARREL (0'-15' FILLS)
5/15	SD 6.06 (2 OF 2)	REINFORCED CONCRETE BOX CULVERTS - SIX BARREL (15'-30' FILLS)
2/12	SD 6.07	REINFORCED CONCRETE BOX CULVERTS - 16'x 14' EQUIPMENT PASS (0'-20' FILLS)
5/15	SD 6.08 (1 OF 8)	REINFORCED CONCRETE BOX CULVERTS - OUTLET WINGS - SKEW 0°to 20° - CULVERT HEIGHT 3'to 7'
2/12	SD 6.08 (2 OF 8)	REINFORCED CONCRETE BOX CULVERTS - OUTLET WINGS - SKEW 0°to 20° - CULVERT HEIGHT 8'to 12'
5/15	SD 6.08 (3 OF 8)	REINFORCED CONCRETE BOX CULVERTS - INLET WINGS - SKEW 0°to 20° - CULVERT HEIGHT 3'to 7'
2/12	SD 6.08 (4 OF 8)	REINFORCED CONCRETE BOX CULVERTS - INLET WINGS - SKEW 0°to 20° - CULVERT HEIGHT 8'to 12'
5/15	SD 6.08 (5 OF 8)	REINFORCED CONCRETE BOX CULVERTS - OUTLET WINGS - SKEW 25°to 45° - CULVERT HEIGHT 3'to 7'
2/12	SD 6.08 (6 OF 8)	REINFORCED CONCRETE BOX CULVERTS - OUTLET WINGS - SKEW 25°to 45° - CULVERT HEIGHT 8'to 12'
5/15	SD 6.08 (7 OF 8)	REINFORCED CONCRETE BOX CULVERTS - INLET WINGS - SKEW 25°to 45° - CULVERT HEIGHT 3'to 7'
2/12	SD 6.08 (8 OF 8)	REINFORCED CONCRETE BOX CULVERTS - INLET WINGS - SKEW 25°to 45° - CULVERT HEIGHT 8'to 12'
5/15	SD 6.09 (1 OF 3)	REINFORCED CONCRETE BOX CULVERTS - HEADWALL QUANTITIES - 2 :1 SLOPE
5/15	SD 6.09 (2 OF 3)	REINFORCED CONCRETE BOX CULVERTS - HEADWALL QUANTITIES - 4 :1 SLOPE
5/15	SD 6.09 (3 OF 3)	REINFORCED CONCRETE BOX CULVERTS - HEADWALL QUANTITIES - 6 :1 SLOPE
5/15	SD 6.10 (1 OF 2)	REINFORCED CONCRETE BOX CULVERTS - INLET OR OUTLET - LEVEL WINGS - CULVERT HEIGHT 3'to 7'
2/12	SD 6.10 (2 OF 2)	REINFORCED CONCRETE BOX CULVERTS - INLET OR OUTLET - LEVEL WINGS - CULVERT HEIGHT 8'to 12'
2/12	SD 6.11 (1 OF 4)	REINFORCED CONCRETE BOX CULVERTS - OUTLET APRON DETAILS
5/15	SD 6.11 (2 OF 4)	REINFORCED CONCRETE BOX CULVERTS - OUTLET APRON - DIMENSIONS & QUANTITIES (2 :1 SLOPE)
5/15	SD 6.11 (3 OF 4)	REINFORCED CONCRETE BOX CULVERTS - OUTLET APRON - DIMENSIONS & QUANTITIES (4 :1 SLOPE)
5/15	SD 6.11 (4 OF 4)	REINFORCED CONCRETE BOX CULVERTS - OUTLET APRON - DIMENSIONS & QUANTITIES (6 :1 SLOPE)
7/12	SD 6.30 (1 OF 5)	PIPE CULVERT HEADWALLS - MISCELLANEOUS DETAILS
7/12	SD 6.30 (2 OF 5)	PIPE CULVERT HEADWALLS - INLET AND OUTLET - 18" to 42" PIPES
7/12	SD 6.30 (3 OF 5)	PIPE CULVERT HEADWALLS - RIGHT ANGLE INLET AND OUTLET - 48" to 84" PIPES
7/12	SD 6.30 (4 OF 5)	PIPE CULVERT HEADWALLS - SKEWED INLET AND OUTLET - 48" to 84" PIPES
7/12	SD 6.30 (5 OF 5)	PIPE CULVERT HEADWALLS - MULTI-PIPE - 48" to 84" PIPES
7/12	SD 6.31 (1 OF 8)	PIPE CULVERT HEADWALLS - RIGHT ANGLE INLET
7/12	SD 6.31 (2 OF 8)	PIPE CULVERT HEADWALLS - RIGHT ANGLE INLET - 2 :1 SLOPE
7/12	SD 6.31 (3 OF 8)	PIPE CULVERT HEADWALLS - RIGHT ANGLE INLET - 4 :1 SLOPE
7/12	SD 6.31 (4 OF 8)	PIPE CULVERT HEADWALLS - RIGHT ANGLE INLET - 6 :1 SLOPE
7/12	SD 6.31 (5 OF 8)	PIPE CULVERT HEADWALLS - RIGHT ANGLE OUTLET
7/12	SD 6.31 (6 OF 8)	PIPE CULVERT HEADWALLS - RIGHT ANGLE OUTLET - 2 :1 SLOPE
7/12	SD 6.31 (7 OF 8)	PIPE CULVERT HEADWALLS - RIGHT ANGLE OUTLET - 4 :1 SLOPE
7/12	SD 6.31 (8 OF 8)	PIPE CULVERT HEADWALLS - RIGHT ANGLE OUTLET - 6 :1 SLOPE

STRUCTURE DETAIL DRAWINGS

REVISION DATE	SD NUMBER	SUBJECT
DRAINAGE STRUCTURES (Continued)		
7/12	SD 6.32 (1 OF 8)	PIPE CULVERT HEADWALLS - 15° SKEW INLET
7/12	SD 6.32 (2 OF 8)	PIPE CULVERT HEADWALLS - 15° SKEW INLET - 2 :1 SLOPE
7/12	SD 6.32 (3 OF 8)	PIPE CULVERT HEADWALLS - 15° SKEW INLET - 4 :1 SLOPE
7/12	SD 6.32 (4 OF 8)	PIPE CULVERT HEADWALLS - 15° SKEW INLET - 6 :1 SLOPE
7/12	SD 6.32 (5 OF 8)	PIPE CULVERT HEADWALLS - 15° SKEW OUTLET
7/12	SD 6.32 (6 OF 8)	PIPE CULVERT HEADWALLS - 15° SKEW OUTLET - 2 :1 SLOPE
7/12	SD 6.32 (7 OF 8)	PIPE CULVERT HEADWALLS - 15° SKEW OUTLET - 4 :1 SLOPE
7/12	SD 6.32 (8 OF 8)	PIPE CULVERT HEADWALLS - 15° SKEW OUTLET - 6 :1 SLOPE
7/12	SD 6.33 (1 OF 8)	PIPE CULVERT HEADWALLS - 30° SKEW INLET
7/12	SD 6.33 (2 OF 8)	PIPE CULVERT HEADWALLS - 30° SKEW INLET - 2 :1 SLOPE
7/12	SD 6.33 (3 OF 8)	PIPE CULVERT HEADWALLS - 30° SKEW INLET - 4 :1 SLOPE
7/12	SD 6.33 (4 OF 8)	PIPE CULVERT HEADWALLS - 30° SKEW INLET - 6 :1 SLOPE
7/12	SD 6.33 (5 OF 8)	PIPE CULVERT HEADWALLS - 30° SKEW OUTLET
7/12	SD 6.33 (6 OF 8)	PIPE CULVERT HEADWALLS - 30° SKEW OUTLET - 2 :1 SLOPE
7/12	SD 6.33 (7 OF 8)	PIPE CULVERT HEADWALLS - 30° SKEW OUTLET - 4 :1 SLOPE
7/12	SD 6.33 (8 OF 8)	PIPE CULVERT HEADWALLS - 30° SKEW OUTLET - 6 :1 SLOPE
7/12	SD 6.34 (1 OF 8)	PIPE CULVERT HEADWALLS - 45° SKEW INLET
7/12	SD 6.34 (2 OF 8)	PIPE CULVERT HEADWALLS - 45° SKEW INLET - 2 :1 SLOPE
7/12	SD 6.34 (3 OF 8)	PIPE CULVERT HEADWALLS - 45° SKEW INLET - 4 :1 SLOPE
7/12	SD 6.34 (4 OF 8)	PIPE CULVERT HEADWALLS - 45° SKEW INLET - 6 :1 SLOPE
7/12	SD 6.34 (5 OF 8)	PIPE CULVERT HEADWALLS - 45° SKEW OUTLET
7/12	SD 6.34 (6 OF 8)	PIPE CULVERT HEADWALLS - 45° SKEW OUTLET - 2 :1 SLOPE
7/12	SD 6.34 (7 OF 8)	PIPE CULVERT HEADWALLS - 45° SKEW OUTLET - 4 :1 SLOPE
7/12	SD 6.34 (8 OF 8)	PIPE CULVERT HEADWALLS - 45° SKEW OUTLET - 6 :1 SLOPE
7/12	SD 6.35 (1 OF 2)	PIPE CULVERT HEADWALLS - MULTI-PIPE WITHOUT APRON
7/12	SD 6.35 (2 OF 2)	PIPE CULVERT HEADWALLS - MULTI-PIPE WITH OUTLET APRON
7/12	SD 6.36 (1 OF 4)	PIPE CULVERT HEADWALLS - OUTLET APRONS
7/12	SD 6.36 (2 OF 4)	PIPE CULVERT HEADWALLS - OUTLET APRON STEEL LIST - 2 :1 SLOPE
7/12	SD 6.36 (3 OF 4)	PIPE CULVERT HEADWALLS - OUTLET APRON STEEL LIST - 4 :1 SLOPE
7/12	SD 6.36 (4 OF 4)	PIPE CULVERT HEADWALLS - OUTLET APRON STEEL LIST - 6 :1 SLOPE
RETAINING WALLS		
1/15	SD 7.01 (1 OF 5)	RETAINING WALL (REINFORCED CONCRETE CANTILEVER)
1/15	SD 7.01 (2 OF 5)	RETAINING WALL (REINFORCED CONCRETE CANTILEVER)
1/15	SD 7.01 (3 OF 5)	RETAINING WALL (REINFORCED CONCRETE CANTILEVER)
1/15	SD 7.01 (4 OF 5)	RETAINING WALL (REINFORCED CONCRETE CANTILEVER)
1/15	SD 7.01 (5 OF 5)	RETAINING WALL (REINFORCED CONCRETE CANTILEVER)
9/10	SD 7.02 (1 OF 2)	RETAINING WALL (MASONRY CANTILEVER)
9/10	SD 7.02 (2 OF 2)	RETAINING WALL (MASONRY CANTILEVER)
SOUND BARRIER WALLS		
4/10	SD 8.01	SOUND BARRIER WALL (CONCRETE)
1/13	SD 8.02 (1 OF 2)	SOUND BARRIER WALL (MASONRY)
1/13	SD 8.02 (2 OF 2)	SOUND BARRIER WALL (MASONRY)
TRAFFIC STRUCTURES		
11/04	SD 9.01 (1 OF 5)	MEDIAN SIGN STRUCTURE (TWO SIDED) - ELEVATION & NOTES
4/00	SD 9.01 (2 OF 5)	MEDIAN SIGN STRUCTURE (TWO SIDED) - FOUNDATION DETAILS
4/00	SD 9.01 (3 OF 5)	MEDIAN SIGN STRUCTURE (TWO SIDED) - TYPE A SIGN MOUNT ASSEMBLY
4/00	SD 9.01 (4 OF 5)	MEDIAN SIGN STRUCTURE (TWO SIDED) - TYPE B SIGN MOUNT ASSEMBLY
4/00	SD 9.01 (5 OF 5)	MEDIAN SIGN STRUCTURE (TWO SIDED) - LIGHT SUPPORT AND MISC. DETAILS
11/04	SD 9.02 (1 OF 5)	MEDIAN SIGN STRUCTURE (ONE SIDED) - ELEVATION & NOTES
5/00	SD 9.02 (2 OF 5)	MEDIAN SIGN STRUCTURE (ONE SIDED) - FOUNDATION DETAILS
5/00	SD 9.02 (3 OF 5)	MEDIAN SIGN STRUCTURE (ONE SIDED) - TYPE A SIGN MOUNT ASSEMBLY
5/00	SD 9.02 (4 OF 5)	MEDIAN SIGN STRUCTURE (ONE SIDED) - TYPE B SIGN MOUNT ASSEMBLY
5/00	SD 9.02 (5 OF 5)	MEDIAN SIGN STRUCTURE (ONE SIDED) - LIGHT SUPPORT AND MISC. DETAILS
3/11	SD 9.10 (1 OF 5)	TUBULAR SIGN STRUCTURES - TUBULAR CANTILEVER - GENERAL PLAN
3/11	SD 9.10 (2 OF 5)	TUBULAR SIGN STRUCTURES - TUBULAR CANTILEVER - FOUNDATION DETAILS
3/11	SD 9.10 (3 OF 5)	TUBULAR SIGN STRUCTURES - TUBULAR CANTILEVER - POST AND MAST ARM DETAILS
3/11	SD 9.10 (4 OF 5)	TUBULAR SIGN STRUCTURES - TUBULAR CANTILEVER - SIGN SUPPORT DETAILS
3/11	SD 9.10 (5 OF 5)	TUBULAR SIGN STRUCTURES - TUBULAR CANTILEVER - LIGHT SUPPORT DETAILS
3/11	SD 9.20 (1 OF 5)	TUBULAR SIGN STRUCTURES - TUBULAR FRAME - GENERAL PLAN
3/11	SD 9.20 (2 OF 5)	TUBULAR SIGN STRUCTURES - TUBULAR FRAME - FOUNDATION DETAILS
3/11	SD 9.20 (3 OF 5)	TUBULAR SIGN STRUCTURES - TUBULAR FRAME - POST AND MAST ARM DETAILS
3/11	SD 9.20 (4 OF 5)	TUBULAR SIGN STRUCTURES - TUBULAR FRAME - SIGN SUPPORT DETAILS
3/11	SD 9.20 (5 OF 5)	TUBULAR SIGN STRUCTURES - TUBULAR FRAME - LIGHT SUPPORT AND MISC. DETAILS
8/02	SD 9.50 (1 OF 5)	VARIABLE MESSAGE SIGN - TUBULAR FRAME - PLAN & ELEVATION
8/02	SD 9.50 (2 OF 5)	VARIABLE MESSAGE SIGN - TUBULAR FRAME - MOUNTING DETAILS
8/02	SD 9.50 (3 OF 5)	VARIABLE MESSAGE SIGN - TUBULAR FRAME - MOUNTING & SIGN BRACKET DETAILS
7/00	SD 9.50 (4 OF 5)	VARIABLE MESSAGE SIGN - CATWALK - HANDRAIL DETAILS
7/00	SD 9.50 (5 OF 5)	VARIABLE MESSAGE SIGN - CATWALK - MISCELLANEOUS DETAILS
8/02	SD 9.51	DUAL VARIABLE MESSAGE SIGN - TUBULAR FRAME
5/07	SD 9.52 (1 of 5)	DYNAMIC MESSAGE SIGN - TUBULAR FRAME - PLAN & ELEVATION
5/07	SD 9.52 (2 of 5)	DYNAMIC MESSAGE SIGN - TUBULAR FRAME - MOUNTING DETAILS
5/07	SD 9.52 (3 of 5)	DYNAMIC MESSAGE SIGN - TUBULAR FRAME - MOUNTING DETAILS
5/07	SD 9.52 (4 of 5)	DYNAMIC MESSAGE SIGN - CATWALK - HANDRAIL DETAILS
5/07	SD 9.52 (5 of 5)	DYNAMIC MESSAGE SIGN - CATWALK - MISCELLANEOUS DETAILS
1/15	SD 9.53 (1 of 5)	DWS (VARIABLE TILT CABINET) - TUBULAR FRAME - PLAN & ELEVATION
1/15	SD 9.53 (2 of 5)	DWS (VARIABLE TILT CABINET) - TUBULAR FRAME - MOUNTING DETAILS
1/15	SD 9.53 (3 of 5)	DWS (VARIABLE TILT CABINET) - TUBULAR FRAME - MOUNTING DETAILS
1/15	SD 9.53 (4 of 5)	DWS (VARIABLE TILT CABINET) - CATWALK - HANDRAIL DETAILS
1/15	SD 9.53 (5 of 5)	DWS (VARIABLE TILT CABINET) - CATWALK - MISCELLANEOUS DETAILS

REV.: 5/15

ADOT STANDARD DRAWINGS
REVISION DATES and STANDARD NO.'s REVIEW

	NAME	DATE
STRUCTURES Standards	JIM PYNE	06/2016

PROJECT NO. 010 PM 267 H 8774 01 C — 1D OF 82

RECORD DRAWING DATA — FEDERAL AID NO. 010-E(219)T — REC. DWG. DATE — OF

ADOT STANDARD DRAWINGS

ITS STANDARDS
EFFECTIVE JULY 2014

REVISION DATE	STANDARD NUMBER	SUBJECT: ITS DETAILS
July-14	FM-0.01	SYMBOLS AND ABBREVIATIONS
Aug-13	FM-1.01	TRENCH DETAILS, FMS TRUNKLINE
Aug-13	FM-1.02	TRENCH UNDER PAVEMENT, FMS TRUNKLINE
Aug-13	FM-1.03	BURIED CONDUIT AROUND OBSTRUCTION, DIRECTIONAL DRILLING
Aug-13	FM-1.04	CONDUIT REQUIREMENTS FOR DMS, RMC TO PVC CONDUIT CONNECTION, THROUGH WALL CONDUIT
Aug-13	FM-1.05	CONDUIT MOUNTING DETAILS
Aug-13	FM-1.06	CONDUIT EXPANSION, COUPLING AND JUNCTION BOX, INSTALLATION PLAN
Aug-13	FM-1.07	FMS TRUNK LINE IN BOX GIRDER BRIDGE
Aug-13	FM-1.08	FMS TRUNKLINE IN I-BEAM OR I-GIRDER BRIDGE
Aug-13	FM-2.01	PULL BOX ADJACENT TO FMS PULL BOX
Aug-13	FM-2.02	PULL BOX NO. 9 CABINET CONDUIT INTERFACE PLANS
Aug-13	FM-2.03	PULL BOX NO. 9 DETAILS
Aug-13	FM-2.04	NO. 9 PULL BOX CONDUIT ROUTING AND CABLE RACKING DETAILS
Aug-13	FM-2.05	No. 9 PULL BOX TORSION ASSIST COVER
Aug-13	FM-2.06	PULL BOX NO. 7 TYPICAL INSTALLATION
Aug-13	FM-2.07	BURIED PULL BOX NO. 7 TYPICAL INSTALLATION
Aug-13	FM-2.08	SPLIT NO. 9 PULL BOX
Aug-13	FM-3.01	RAMP METER CABINET DETAILS (SHEET 1 of 2)
Aug-13	FM-3.02	RAMP METER CABINET DETAILS (SHEET 2 of 2)
Aug-13	FM-3.03	RAMP METER CABINET SPECIAL DETAILS
Aug-13	FM-3.04	RAMP METER CABINET ACCESSORIES
Aug-13	FM-3.05	RAMP METER FIELD PANEL DETAILS
Aug-13	FM-3.06	RAMP METER FIELD PANEL CONNECTIONS
Aug-13	FM-3.07	RAMP METER SIGNAL POWER INTERRUPT RELAY AND PIN ASSIGNMENTS
Aug-13	FM-3.08	POWER DISTRIBUTION ASSEMBLY CONNECTOR AND INSTALLATION DETAILS
Aug-13	FM-3.09	POWER DISTRIBUTION ASSEMBLY #4 (PDA4) SCHEMATIC DIAGRAM
Aug-13	FM-3.10	RAMP METER CI HARNESS CONNECTIONS
Aug-13	FM-3.11	CCTV CABINET DETAILS (SHEET 1 of 2)
Aug-13	FM-3.12	CCTV CABINET DETAILS (SHEET 2 of 2)
Aug-13	FM-3.13	CABINET NUMBER DECAL DETAIL
Aug-13	FM-3.14	TRANSFORMER CABINET, EXTERNAL POWER DISCONNECT
Aug-13	FM-3.15	TRANSFORMER, 3kVA & 7.5kVA, DRY TYPE DETAILS AND WIRING DIAGRAMS
Aug-13	FM-3.16	TRANSFORMER, 10kVA & 25kVA, DRY TYPE DETAILS AND WIRING DIAGRAMS
Aug-13	FM-3.17	CLEAR ZONES, UNPROTECTED EQUIPMENT
Aug-13	FM-3.18	TYPE II LOAD CENTER
Aug-13	FM-3.19	TYPE IV LOAD CENTER FOUNDATION AND CABINET DETAIL
Aug-13	FM-3.20	TYPE IV MODIFIED LOAD CENTER
July-14	FM-3.21	RAMP METER CABINET FOUNDATION W/O TRANSFORMER
July-14	FM-3.22	RAMP METER CABINET WITH TRANSFORMER, FOUNDATION
July-14	FM-3.23	SKYLINE 336S DMS CABINET FOUNDATION DETAILS
July-14	FM-3.23A	SKYLINE 332 DMS CABINET FOUNDATION DETAILS
July-14	FM-3.24	SKYLINE 336S DMS & TRANSFORMER CABINET FOUNDATION DETAILS
July-14	FM-3.24A	SKYLINE 332 DMS & TRANSFORMER CABINET FOUNDATION DETAILS
July-14	FM-3.25	NOT USED
Aug-13	FM-3.26	TRANSFORMER CABINET FOUNDATION
July-14	FM-3.27	DAKTRONICS DMS CABINET FOUNDATION DETAILS
July-14	FM-3.28	DAKTRONICS DMS & TRANSFORMER CABINET FOUNDATION DETAILS
Aug-13	FM-3.29	DMS CABINET ADPATER AND ELEVATOR BASE DETAILS
Aug-13	FM-4.01	CCTV CABINET BLOCK DIAGRAM
Aug-13	FM-4.02	FREEWAY MANAGEMENT SYSTEM CABINET BLOCK ETHERNET DIAGRAM
Aug-13	FM-4.03	DMS CABINET ETHERNET BLOCK DIAGRAM
Aug-13	FM-5.01	DETECTION DEFINITION
Aug-13	FM-5.02	TYPICAL DETECTOR LOOP INSTALLATION DETAILS
Aug-13	FM-5.03	TYPICAL PREFORMED DETECTOR LOOP INSTALLATION DETAILS
Aug-13	FM-5.04	DETECTOR LOOP IN AC PAVEMENT INSTALLATION LAYOUT
Aug-13	FM-5.05	DETECTOR LOOP IN PCCP PAVEMENT INSTALLATION LAYOUT
Aug-13	FM-5.06	DETECTOR LOOP TEST FORM 1
Aug-13	FM-5.07	DETECTOR LOOP TEST FORM 2 PART A
Aug-13	FM-5.08	DETECTOR LOOP TEST FORM 2 PART B
Aug-13	FM-6.01	RAMP METER DETAILS
Aug-13	FM-6.02	SINGLE-LANE RAMP METER
Aug-13	FM-6.03	SINGLE-LANE RAMP METER WITH FRONTAGE ROAD
Aug-13	FM-6.04	TWO-LANE RAMP METER
Aug-13	FM-6.05	TWO-LANE RAMP METER WITH FRONTAGE ROAD
Aug-13	FM-6.06	RAMP METER WITH OBSTRUCTION INSTALLATION DETAILS
Aug-13	FM-7.01	CCTV POLE CCTV CABINET MOUNTING DETAILS AND FIELD ORIENTATION
Aug-13	FM-7.02	CCTV POLE AND MOUNTING DETAILS
Aug-13	FM-7.03	CCTV POLE MOUNTING PLATE DETAILS

NO.	Revised Details: 0.01, 3.21, 3.22, 3.23, 3.23a, 3.24, 3.24a, 3.27 and 3.28. Deleted 3.25.	MADE BY: Bruggeman	DATE: 7/31/14	NO. 2	DESCRIPTION OF REVISION:	MADE BY:	DATE:

ADOT STANDARD DRAWINGS
REVISION DATES and STANDARD NO.'s REVIEW

	NAME	DATE
ITS STANDARD DRAWINGS	CHRIS MILNER	06/2016

PROJECT NO.			
010 PM 267 H 8774 01 C	1E	OF	82
RECORD DRAWING DATA / FEDERAL AID NO. 010-E(219)T	REC. DWG. DATE	OF	

F.H.W.A. REGION	STATE	PROJECT NO.	SHEET NO.	TOTAL SHEETS	RECORD DRAWING
9	ARIZ.	010-E(219)T	2	82	
		010 PM 267			

REFERENCES

IR-I-10-5(40)
I 010-E-701
IR-10-5(62)
N-900-0-543
I-010-E-504
STP-IM-010-E(209)T

MIDPOINT OF PROJECT

CENTRAL ZONE
STATE PLANE COORDINATES

X = 1,022,600
Y = 410,900

LENGTH OF PROJECT

EB I-10 Survey ℄ Sta 359+40.13 to
WB I-10 Survey ℄ Sta 388+28.82 =
Gross & Net Length = 2,888.69' (0.55 Miles)
Mile Post 267.81 to 268.36

DESIGN DATA

2015 AADT = 59,000
2036 AADT = 90,700
Design Speed:
Mainline = 75 MPH
Detour = 55 MPH
Detour Entrance = 65 MPH

pH AND RESISTIVITY			
Boring	Station	ph	Resistivity
B-1	373+30±	8.6	1,496
B-2	375+30±	8.5	1,050

SURVEY CONTROL POINTS			
Name	Ground (E)	Ground (N)	Elevation
N 419	442703.978	987293.600	2377.037
X 419	431449.027	1001309.968	2501.459
C 317	418350.538	1019118.046	2668.007
WILMOT	407226.526	1027903.638	2778.287
E 430	387806.614	1054415.924	3050.642
IRENE	369961.575	1078887.702	3427.783
PA 12	363321.191	1106898.159	3663.043

BASIS OF BEARINGS:

ADOT Engineering Survey Crew surveyed and provided the coordinates for the project. Coordinates were based on NAD83/2011 Horizontal and NAVD88 Vertical Datum with GAF of 1.00016. NGS Control Points used for this project include: N 419, X 419, C 317, WILMOT, E 430, IRENE, PA 12.

BASIS OF ALIGNMENT:

Best Fit Alignments are based on split of existing edge of pavement survey points and R/W Markers located in the field.

BASIS OF STATIONS:

The alignments are tied to Station: POE 488+05.12 (POT 3878 Phase 2 I-10EB) and POE 488+04.34 (POT 3878 Phase 2 I-10WB). 3878 Phase 2 are tied to Station: POT a678+51.41 (POB 3878 Phase 1 I-10EB) and POT a678+51.30 (POB 3878 Phase 1 I-10WB). 3878 Phase 1 alignments are tied to R/W marker Station: BC STA. 775+00.00 (I-10 EB/WB).

BASIS OF ELEVATION:

NGS Monument Stamped N 419 with elevation 2,377.037', was held as basis of elevation for the project.

INDEX OF SHEETS

Sheet No.	Sheet Type
1	Face Sheet
1A-1E	ADOT Standard Drawings
2-4	Design Sheets
5	Barrier Summary Sheet
6-11	Detail Sheets
12-14	Removal Sheets
15-17	Detour Sheets
18-20	Detour Staking Sheets
21-23	Detour Removal & Final Paving Sheets
24-36	Traffic Control Sheets
37-42	Pavement Marking and Signing Sheets
43	FMS Conduit Plan
44-52	Erosion Control Sheets
53-82	Bridge Sheets

GENERAL NOTES

1. The roadway plans have been designed utilizing the 2012 Construction Standard Drawings (C-Series) and current revisions. Refer to the 1A sheet for a listing of current revision dates.
2. The project roadway shall be striped by the contractor in accordance with the current edition of the Signing and Marking Standard Drawings (M&S-Series) and the pavement marking plans.
3. Bench markers will be furnished by the State and shall be placed by the contractor: Std C-21.20 at no additional cost to the Department.
4. Pavement lift thickness is nominal for pavement structural sections No. 4 and No. 5.
5. Where only the horizontal location of existing utility is shown, the location is approximate. Where both the horizontal and vertical location of an existing utility is shown, the location has been verified by field survey methods. The contractor shall comply with all current Blue Stake laws and Section 107.15 of the Specifications.
6. Delineators, object markers and mile post markers, if present, shall be removed and reset as required at no additional cost to the Department.
7. The average project elevation is 2,738'.
8. New Right-of-Way and easements are not required.
9. Survey monuments in median must not be disturbed.
10. The permanent pavement shoulders shall be treated with a rumble strip: see ADOT Std. Dwg M-22 (Sheet 1 of 2).

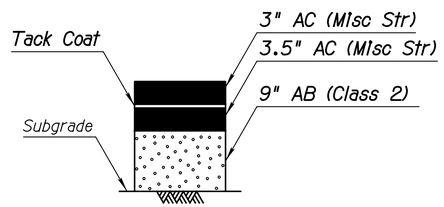

Total Thickness = 15½"

SECTION NO. 1
TEMPORARY DETOUR

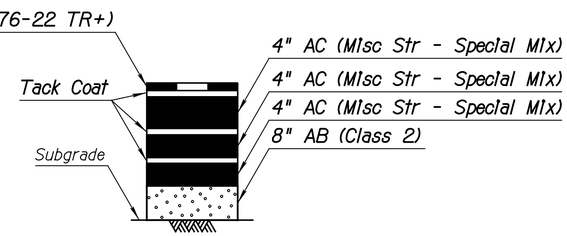

Total Thickness = 20½"

SECTION NO. 2
MAINLINE PAVEMENT REPLACEMENT

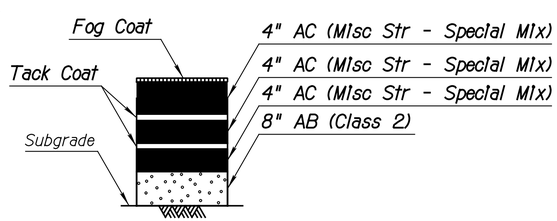

Total Thickness = 20"

SECTION NO. 3
SHOULDER PAVEMENT REPLACEMENT

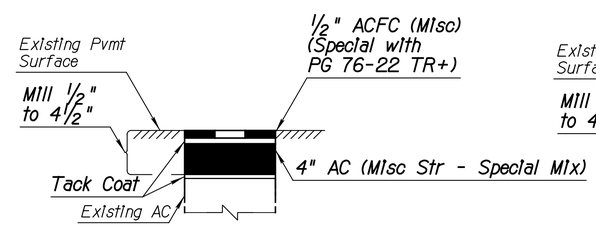

Total Thickness = 4½"

SECTION NO. 4
MAINLINE MILL AND REPLACE

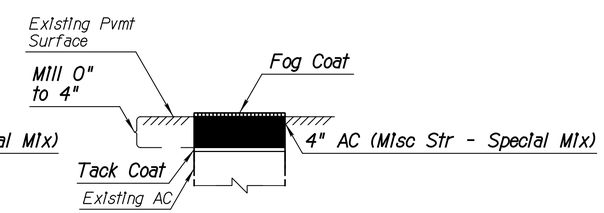

Total Thickness = 4"

SECTION NO. 5
SHOULDER MILL AND REPLACE

EARTHWORK QUANTITIES	
Roadway Excavation	2,647 CY
Shrink 5%	133 CY
Embankment	8,514 CY
Ground Compaction (0.2)	1,099 CY
Borrow (In Place)	8,214 CY

Note: I-10 EB & WB Roadway to remain open to traffic during placement of embankment for temporary detour. As a result, I-10 EB & WB Roadway Excavation (1,174 CY, 59 CY Shrink 5%) is unavailable for use as embankment for this project.

EARTHWORK FACTORS			
Station	Shrink/Swell	Ground Compaction	Slopes
Project Limits	5% Shrink	0.2 '	Fill Slopes: 2:1 or Flatter

PAVEMENT STRUCTURAL SECTIONS

	NAME	DATE
DESIGN	CEM	05-16
DRAWN	WKH	05-16
CHECKED	FLM	05-16

T.Y. LIN INTERNATIONAL
engineers | planners | scientists
60 E. Rio Salado Parkway, Suite 501
Tempe, Arizona 85281, Tel. 480-968-8814

ARIZONA DEPARTMENT OF TRANSPORTATION
INFRASTRUCTURE DELIVERY AND OPERATIONS DIVISION
ROADWAY DESIGN SERVICES

DESIGN SHEET

ROUTE: I-10
LOCATION: CRAYCROFT RD TI OP STR #594 & #595

Registered Professional Engineer (Civil) CERTIFICATE NO. 51336 CHRISTOPHER E. MILNER Date Signed 06/16/16 ARIZONA, U.S.A. Expires 9/30/2016

DWG NO. G-01.01

TRACS NO. H 8774 01C | 010-E(219)T | ___ OF ___

Workspace: T:\Tempe\Legacy\CADD Standards\station\projects\221867.00 Craycroft - Wilmot.pcf | Plot Driver: ...\Plotcfg\ADOT PDF_FULL.pltt | Pentable: STDPLOT.TBL
SURVEY NO. | FINISHED PLANS- | REVISIONS- | SURVEY NO. | LOCATION- | DATE- | REVISIONS- | LOCATION-

F.H.W.A. REGION	STATE	PROJECT NO.	SHEET NO.	TOTAL SHEETS	RECORD DRAWING
9	ARIZ.	010-E(219)T	3	82	

010 PM 267

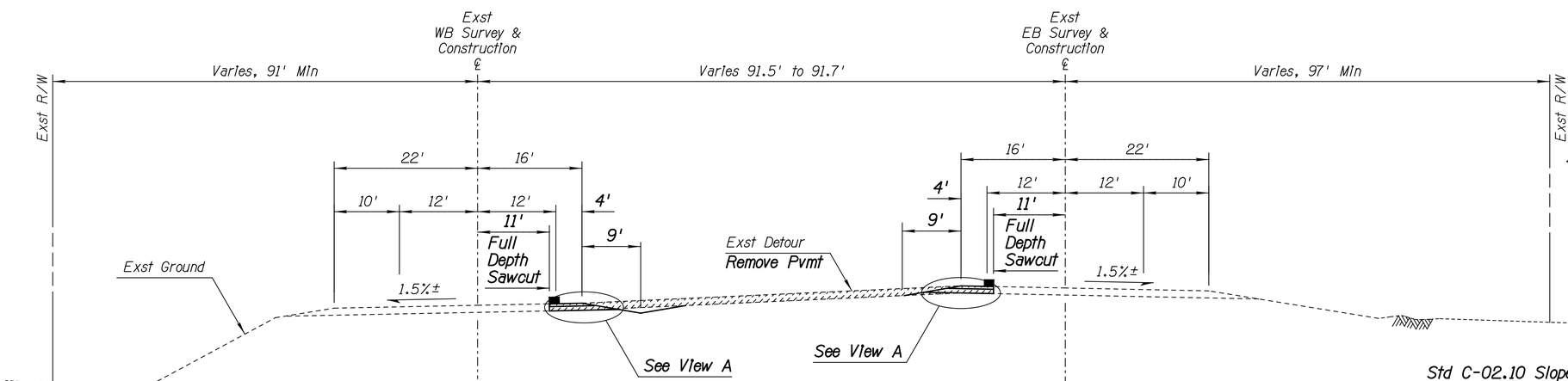

I-10 TYPICAL SECTION

WB Sta 361+11.18 to 369+00.00
WB Sta 380+00.00 to 388+28.82

EB Sta 359+40.13 to 369+00.00
EB Sta 380+00.00 to 388+00.61

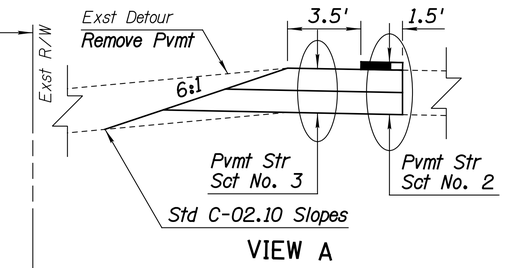

VIEW A

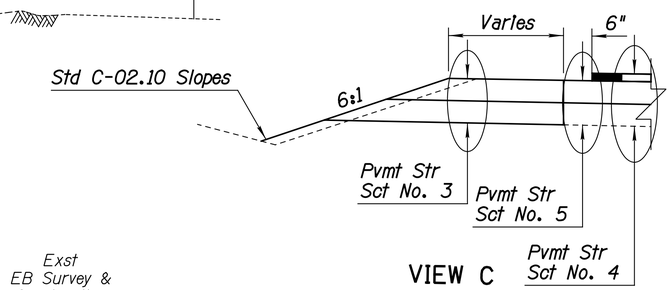

VIEW C

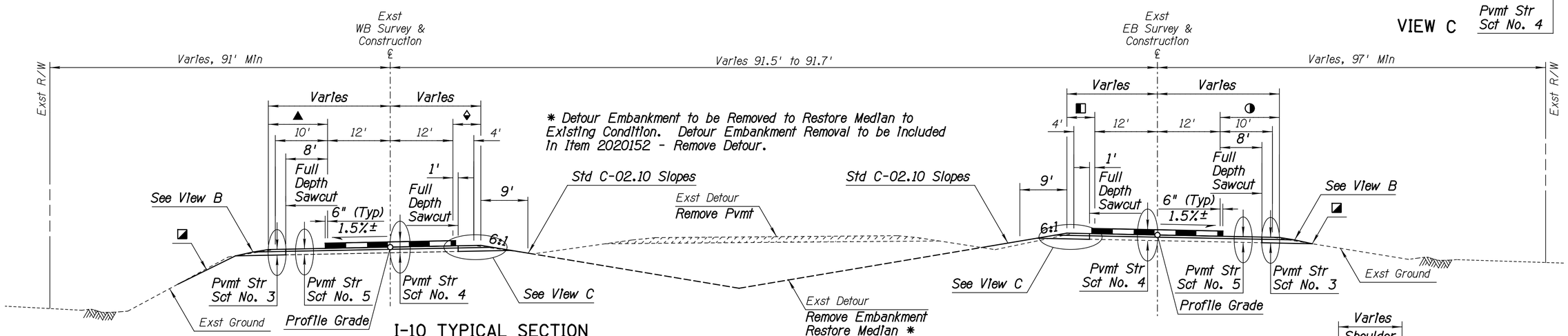

* Detour Embankment to be Removed to Restore Median to Existing Condition. Detour Embankment Removal to be Included In Item 2020152 - Remove Detour.

I-10 TYPICAL SECTION

WB	Sta 370+78.59	to 371+48.32	▲ Varies 10.4' to 11.3' ◆ 4.0' ◪ 3:1	EB	Sta 371+49.64	to 371+75.00	◑ Varies 10.9' to 11.3' ◧ 5.3' ◪ 3:1
WB	Sta 371+48.32	to 371+52.92	▲ 11.3' ◆ 4.0' ◪ 3:1	EB	Sta 371+75.00	to 373+61.12	◑ 11.3' ◧ 5.3' ◪ 3:1
WB	Sta 371+52.92	to 372+52.92	▲ 11.3' ◆ Varies 4.0' to 5.3' ◪ 3:1	EB	Sta 373+61.12	to 375+80.34	SEE STRUCTURAL BRIDGE PLANS
				EB	Sta 375+80.34	to 376+10.08	◑ 11.3' ◧ 5.3' ◪ Slope Varies. Hold 14' from Hinge Point.
WB	Sta 372+52.92	to 372+94.44	▲ 11.3' ◆ 5.3' ◪ 3:1	EB	Sta 376+10.08	to 377+10.08	◑ 11.3' ◧ Varies 5.3' to 4.0' ◪ Slope Varies. Hold 14' from Hinge Point.
WB	Sta 372+94.44	to 375+01.88	SEE STRUCTURAL BRIDGE PLANS				
WB	Sta 375+01.88	to 376+76.53	▲ 11.3' ◆ 5.3' ◪ Slope Varies. Hold 14' from Hinge Point.	EB	Sta 377+10.08	to 377+39.68	◑ 11.3' ◧ 4.0' ◪ Slope Varies. Hold 14' from Hinge Point.
WB	Sta 376+76.53	to 377+13.36	▲ Varies 11.3' to 10.0' ◆ 5.3' ◪ Slope Varies. Hold 14' from Hinge Point.	EB	Sta 377+39.68	to 377+84.41	◑ Varies 11.3' to 10.7' ◧ 4.0' ◪ Slope Varies. Hold 14' from Hinge Point.

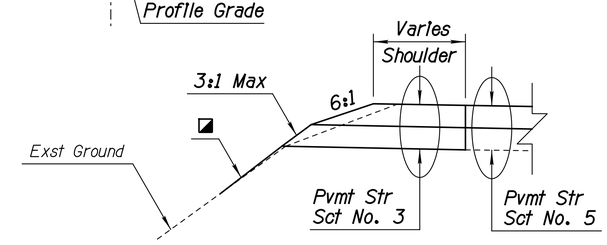

VIEW B

	NAME	DATE
DESIGN	CEM	05-16
DRAWN	WKH	05-16
CHECKED	FLM	05-16

T·Y·LIN INTERNATIONAL
engineers | planners | scientists
60 E. Rio Salado Parkway, Suite 501
Tempe, Arizona 85281, Tel. 480-968-8814

ARIZONA DEPARTMENT OF TRANSPORTATION
INFRASTRUCTURE DELIVERY AND OPERATIONS DIVISION
ROADWAY DESIGN SERVICES

TYPICAL SECTION SHEET

Registered Professional Engineer (Civil) CERTIFICATE NO. 51336 CHRISTOPHER E. MILNER Date Signed 06/16/16 ARIZONA, U.S.A. Expires 9/30/2016

ROUTE	LOCATION	DWG NO.
I-10	CRAYCROFT RD TI OP STR #594 & #595	G-02.01

TRACS NO. H 8774 01C | 010-E(219)T | ___ OF ___

Workspace: T:\Tempe\Legacy\CADD_Standards\station\projects\221867.00 Craycroft - Wilmot.pcf | Plot Driver: ...\Plotcfg\ADOT_PDF_FULL.pltl | Pentable: STDPLOT.TBL
SURVEY NO. | FINISHED PLANS- | REVISIONS- | LOCATION- | DATE- | SURVEY NO. | REVISIONS- | LOCATION-

CMilner 1:30:25 PM 6/16/2016 t:\tempe\projects\221867.00\600_cadd\05_official\delv files\Typicals\H8774typ01.dgn

F.H.W.A. REGION	STATE	PROJECT NO.	SHEET NO.	TOTAL SHEETS	RECORD DRAWING
9	ARIZ.	010-E(219)T	4	82	
		010 PM 267			

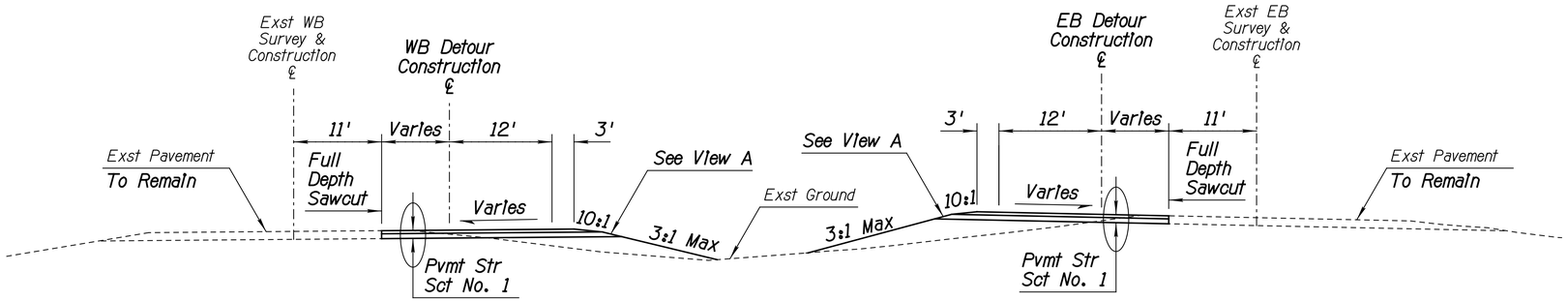

WB Detour Sta 51+61.43 to 57+40.72
WB Detour Sta 72+23.29 to 78+80.59

EB Detour Sta 11+15.26 to 18+65.80
EB Detour Sta 33+48.19 to 39+77.42

DETOUR TYPICAL SECTION

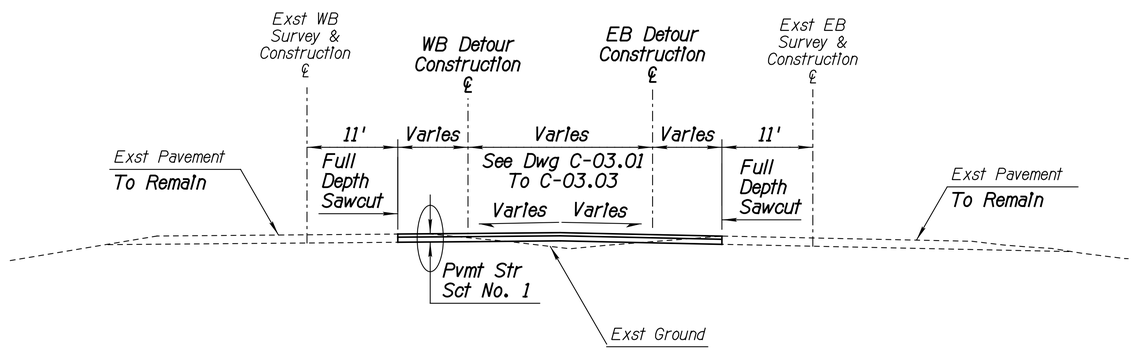

DETOUR TYPICAL SECTION

WB Detour Sta 57+40.72 to 58+09.45
WB Detour Sta 71+52.83 to 72+23.29

EB Detour Sta 18+65.80 to 19+13.93
EB Detour Sta 33+00.13 to 33+48.19

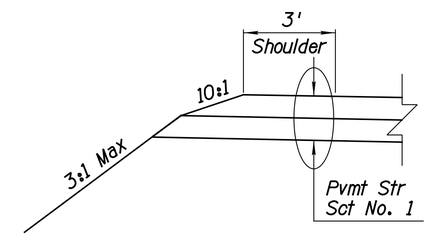

VIEW A

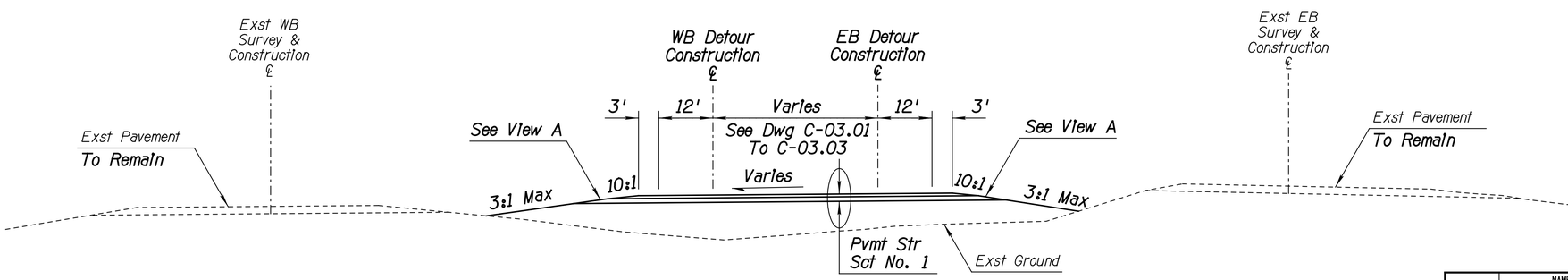

DETOUR TYPICAL SECTION

WB Detour Sta 58+09.45 to 63+66.30
WB Detour Sta 65+98.80 to 71+52.83

EB Detour Sta 19+13.93 to 24+91.21
EB Detour Sta 27+23.71 to 33+00.13

	NAME	DATE
DESIGN	CEM	05-16
DRAWN	WKH	05-16
CHECKED	FLM	05-16

T.Y. LIN INTERNATIONAL
engineers | planners | scientists
60 E. Rio Salado Parkway, Suite 501
Tempe, Arizona 85281, Tel. 480-968-8814

ARIZONA DEPARTMENT OF TRANSPORTATION
INFRASTRUCTURE DELIVERY AND OPERATIONS DIVISION
ROADWAY DESIGN SERVICES

TYPICAL SECTION SHEET

Registered Professional Engineer (Civil) CERTIFICATE NO. 51336 CHRISTOPHER E. MILNER Date Signed 06/16/16 ARIZONA, U.S.A. Expires 9/30/2016

ROUTE	LOCATION
I-10	CRAYCROFT RD TI OP STR #594 & #595

DWG NO. G-02.02

TRACS NO. H 8774 01C | 010-E(219)T | ___ OF ___

Workspace: T:\Tempe\Legacy\CADD_Standards\station\projects\221867.00 Craycroft - Willmot.pcf
Plot Driver: ...\Plotcfg\ADOT PDF FULL.plt
Pentable: STDPLOT.TBL
SURVEY NO. | FINISHED PLANS- | REVISIONS- | LOCATION- | DATE- | SURVEY NO. | REVISIONS- | LOCATION-

CMilner 1:30:27 PM 6/16/2016 t:\tempe\projects\221867.00\600_cadd\05_official\delv files\Typicals\H8774typ02.dgn

F.H.W.A. REGION	STATE	PROJECT NO.	SHEET NO.	TOTAL SHEETS	RECORD DRAWING
9	ARIZ.	010-E(219)T	5	82	
		010 PM 267			

ONE-WAY ROADWAY

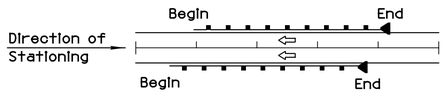

TWO-WAY ROADWAY WITH STRUCTURE ◒

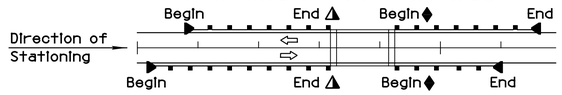

DIVIDED ROADWAY WITH HIGH TENSION MEDIAN CABLE BARRIER

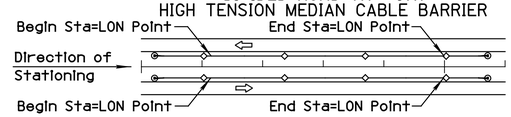

LOCATION		BARRIER																										TRANSITION		END TREATMENT																							
		NEW GUARDRAIL										EXISTING GUARDRAIL			CABLE BARRIER													RAIL	CONC BARRIER	NEW										EXISTING											
																												Each	Each	Each ◪										Action	Each ◪										
Begin Station (Approximate) (0)	Plan Reference Number ◇	Type "A" C-10.01, Type "B" C-10.02	C-10.03 (Timber)	C-10.04 (Steel)	Detail C - Exst GR Connection	Length (Linear Feet) (0.0)	C-10.06 Nested W-Beam ▲ Length (Linear Feet) (0.0)	C-10.07 Bolted Anchor (Each)	Shop Curved Guardrail Length (Linear Feet) (0.0)	Reconstruct-Exst Post, Block Length (Linear Feet) (0.0)	Reconstruct-New Post, Block Length (Linear Feet) (0.0)	Remove and Salvage Length (Linear Feet) (0.0)	Construct from Salvage Length (Linear Feet) (0.0)	Remove Length (Linear Feet) (0.0)	C-12.30 Chain-Link Cable Barrier Concrete Foundation (Each)	C-12.30 Chain-Link Cable Barrier Concrete Anchor Block (Each)	Remove Existing Concrete Foundation (Each)	Remove Existing Concrete Anchor Block (Each)	Remove and Salvage Existing Chain-Link Cable Barrier Length (Linear Feet) (0)	Construct from Salvage C-12.30 Chain-Link Cable Barrier Length (Linear Feet) (0)		Begin = Treatment at Beginning End = Treatment at End	Reconstruct Thrie Beam	Reconstruct Rub Rail	C-10.70 32" or C-10.72 42"	C-10.74 42" to 32"	Detail	Tangent Details A01 or A02 ◧	Flared Details or	End Anchor C-10.08 or Detail ◧	High-Tension Cable Terminal	Sand Barrels C-1 or Detail ◆	Attenuator Detail	Reconstruct (See Special Prv)	Remove and Salvage	Construct from Salvage	Remove	Tangent	Flared	End Anchor C-10.08 or Detail	High-Tension Cable Terminal	Sand Barrels C-1 or Detail ◆	Attenuator Detail	BCT (L=12.5')	REMARKS
WB 370+73 Lt	1	A			X							187.5	187.5									Begin																											
																						End																											
WB 372+53 Rt	2	A	X			25.0																Begin								1																			
																						End																											
WB 375+02 Lt	3	A			X	12.5						200.0	200.0									Begin																											
																						End																											
WB 375+49 Rt	4	A										287.5	287.5	12.5								Begin																											Install New End Terminal on Exst Pad
																						End					1										X	1										
EB 369+76 Lt	5	A										287.5	287.5	12.5								Begin					1										X	1										Install New End Terminal on Exst Pad
																						End																											
EB 371+36 Rt	6	A			X	12.5	37.5					212.5	212.5									Begin																											
																						End																											
EB 372+59 Lt	7														7	2				48		Begin																											Install Salvaged Chain-Link Cable Barrier with New Foundations and New Anchors
																						End																											
EB 372+72 Lt	8																8	2	66			Begin																											
																						End																											
EB 375+47 Lt	9																8	2	66			Begin																											
																						End																											
EB 375+73 Lt	10	A	X			25.0																Begin																											Install Salvaged Chain-Link Cable Barrier with New Foundations and New Anchors
																						End								1																			
EB 376+02 Rt	11	A			X							187.5	187.5									Begin																											
																						End																											
EB 376+03 Lt	12														7	2				48		Begin																											
																						End																											
																						Begin																											
																						End																											
Sheet Total						75.0	37.5					1362.5	1362.5	25.0	14	4	16	4	132	96							2		2								2											

THE ZEROS IN PARENTHESES (0.0) INDICATE THE DIMENSIONAL PRECISION FOR THAT COLUMN

▲ THE LENGTH OF NESTED W-BEAM IS FOR TYPES 2 OR 3 (37.5'). DETERMINATION OF TYPE (1, 2 or 3) TO USE IS MADE IN THE FIELD. THE PAY QUANTITY IS THE LENGTH INSTALLED PER STD. C-10.06 (25.0' or 37.5')

◭ END STATION BEFORE BRIDGE TRANSITION

◆ BEGIN STATION AFTER BRIDGE TRANSITION

◒ SEE BRIDGE SHEETS FOR BRIDGE BARRIER DETAILS AND QUANTITIES

● LENGTH IS FROM LENGTH OF NEED (LON) POINT TO LON POINT. ACTUAL SEGMENT LENGTH VARIES DEPENDING ON TERMINAL TYPE. SEE SPECIAL PROVISIONS.

◪ ALLOWABLE END TREATMENT OPTIONS ARE INDICATED WITH THE NUMBER '1' IN THE SPACE. BLANK SPACES ARE NOT VIABLE ALTERNATIVES

■ ARRAY TYPE AND ANGLE IS NOTED UNDER 'REMARKS'

◧ NOTE: FOR RECORD DRAWING PREPARATION - CIRCLE END TREATMENT INSTALLED

	NAME	DATE
DESIGN	CEM	05-16
DRAWN	WKH	05-16
CHECKED	FLM	05-16

T·Y·LIN INTERNATIONAL
engineers | planners | scientists
60 E. Rio Salado Parkway, Suite 501
Tempe, Arizona 85281, Tel. 480-968-8814

ARIZONA DEPARTMENT OF TRANSPORTATION
INFRASTRUCTURE DELIVERY AND OPERATIONS DIVISION
ROADWAY DESIGN SERVICES

BARRIER SUMMARY SHEET

Registered Professional Engineer (Civil)
CERTIFICATE NO. 51336
CHRISTOPHER E. MILNER
Date Signed 06/16/16
ARIZONA, U.S.A.
Expires 9/30/2016

ROUTE	LOCATION
I-10	CRAYCROFT RD TI OP STR #594 & #595

DWG NO. G-03.01

TRACS NO. H 8774 01C | 010-E(219)T | ___ OF ___

Workspace: T:\Tempe\Legacy\CADD Standards\station\projects\221867.00 Craycroft - Willmot.pcf | Plot Driver: ...\Plotcfg\ADOT_PDF_FULL.pll | Pentable: STDPLOT.TBL
SURVEY NO. | FINISHED PLANS- | REVISIONS- | LOCATION- | DATE- | SURVEY NO. | REVISIONS- | LOCATION-
REV. DATE: 01/12/2015

F.H.W.A. REGION	STATE	PROJECT NO.	SHEET NO.	TOTAL SHEETS	RECORD DRAWING
9	ARIZ.	010-E(219)T	6	82	
		010 PM 267			

● FOR ELEVATIONS ABOVE 4,000', USE THE VALUES IN PARENTHESES

GENERAL NOTES

1. This detail is for roadway layout only.
2. The SKT-350 shall be installed in accordance with the manufacturer's specifications and current approved drawings including all details, hardware, hardware quantities, and other information.

   The current manufacturer's approved drawing is number SKT-W-2US-AZ, 06/04/11. Visit the Roadway Design web site to view and print the drawing.
3. The 50' W-Beam length shall consist of four 12'-6" sections, the end section being a proprietary split rail.
4. See specifications and Traffic Signing and Marking Standard Drawings.
5. ③ "Leaveouts" in asphaltic concrete shall be provided in the AC pavement around the guardrail posts at the locations and dimensions specified on the manufacturer approved drawings. "Leaveout" material shall consist of a 1-sack grout mix or other non-cohesive material as approved by the Engineer.

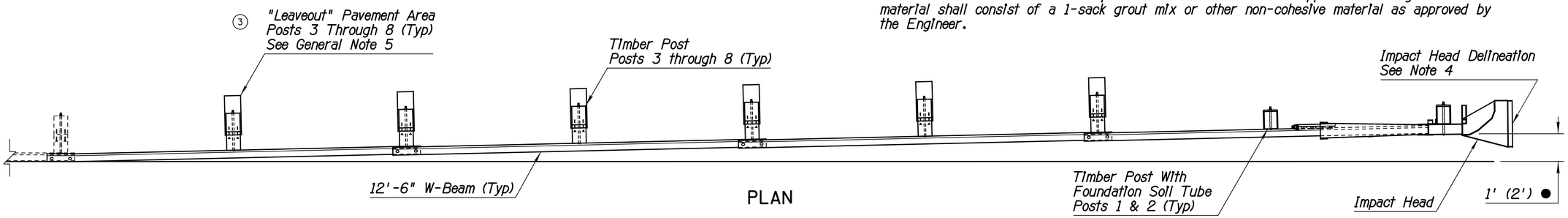

PLAN

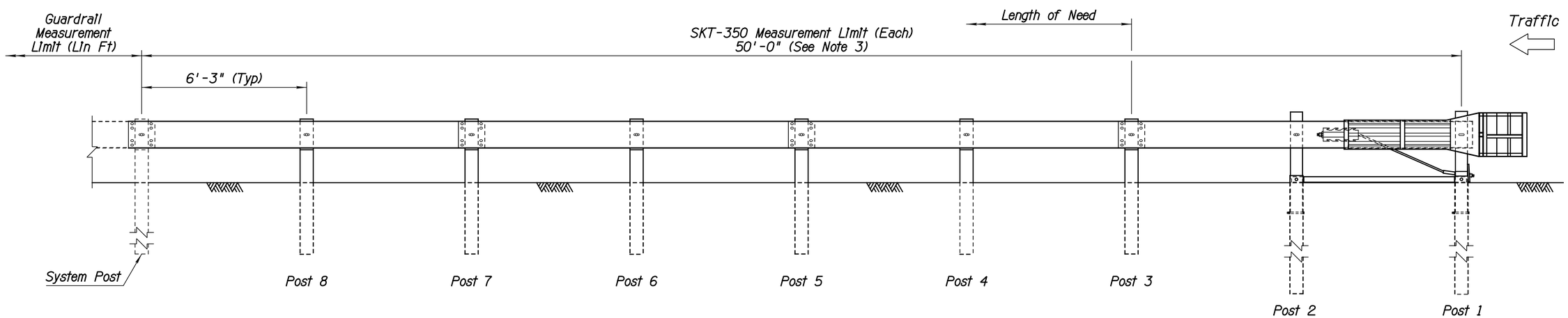

ELEVATION

DETAIL A01

Sheet 1 of 2

LAYOUT FOR SKT-350
2 FOUNDATION SOIL TUBES ①
(AC PAVEMENT)

DESIGN APPROVED J.C. Cooper	ARIZONA DEPARTMENT OF TRANSPORTATION INFRASTRUCTURE DELIVERY AND OPERATIONS DIVISION ROADWAY GROUP PLANS DETAIL
APPROVED FOR DISTRIBUTION Mary Viparina	DETAIL SHEET DETAIL A01 (SHEET 1 OF 2)
ROUTE I-10 / LOCATION CRAYCROFT RD TI OP STR #594 &#595	DWG NO. G-04.01
TRACS NO. H 8774 01C	010-E(219)T ____ OF ____

Date: 6/06/11

Note to Designer:
The information presented in this Roadway Plans Detail is for general use. Designers should satisfy themselves that their project site conditions are appropriate for use of this drawing. Contents within the inner border shall not be altered, except for the addition of the Detail designation.

NO	DESCRIPTION OF REVISIONS	MADE BY	DATE
1	REISSUED DRAWING WITH MODIFIED APPROACH TAPER	RLF	5/22/07
2	REVISED TITLE BLOCK NAME & DRAWING DATE	RLF	7/09/09
3	ADDED "LEAVEOUT" CALLOUT & NEW GENERAL NOTE 5	RLF	6/06/11
4			

● FOR ELEVATIONS ABOVE 4,000 FT, USE THE VALUES IN PARENTHESES

▲ Top of Rail = 28"
See General Note 1
Std Dwg C-10.03

F.H.W.A. REGION	STATE	PROJECT NO.	SHEET NO.	TOTAL SHEETS	RECORD DRAWING
9	ARIZ.	010-E(219)T	7	82	
		010 PM 267			

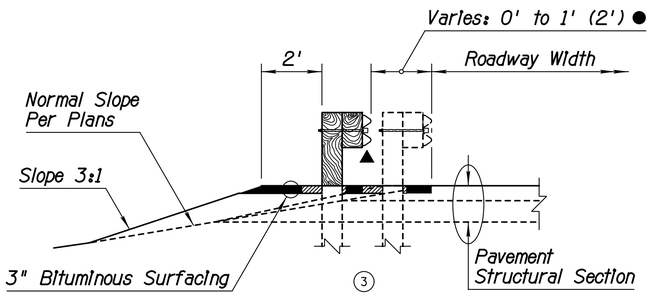

TYPE A SECTION

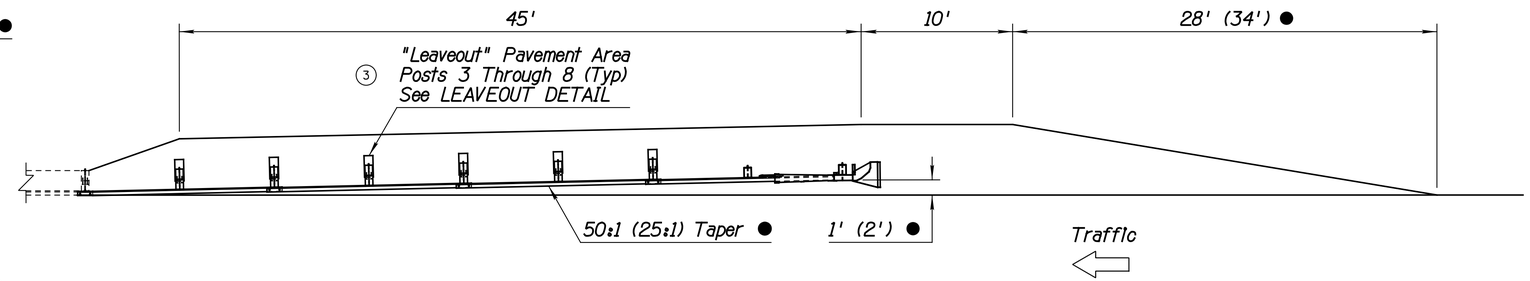

TYPE A GUARDRAIL INSTALLATION
(FACE OF RAIL AT EDGE OF PAVEMENT)

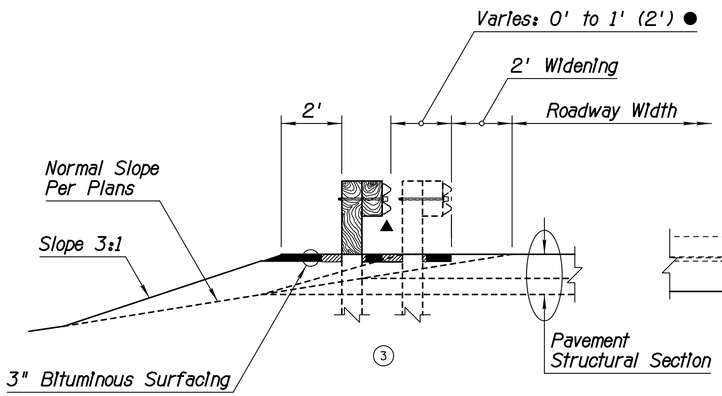

TYPE B SECTION

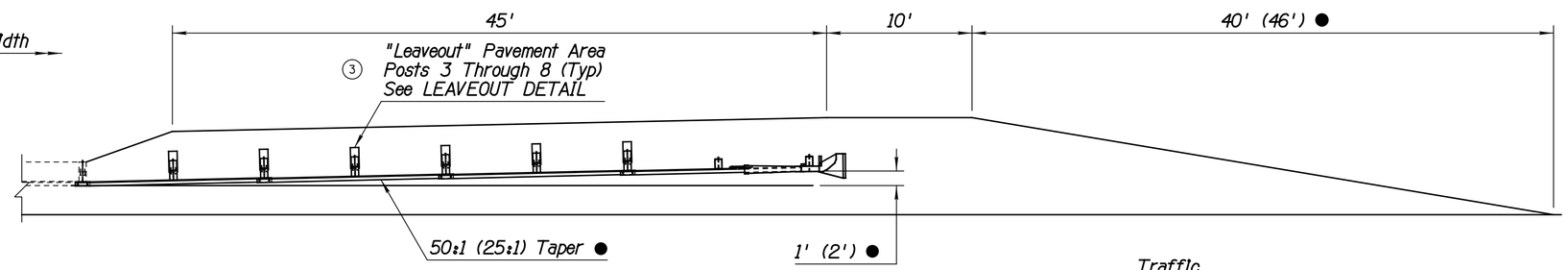

Traffic

TYPE B GUARDRAIL INSTALLATION
(FACE OF RAIL OFFSET 2' FROM NORMAL EDGE OF PAVEMENT)

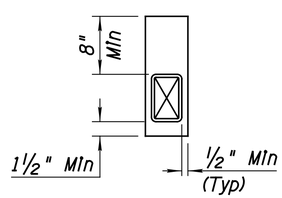

LEAVEOUT DETAIL

4

DETAIL A01

Sheet 2 of 2

LAYOUT FOR SKT-350
2 FOUNDATION SOIL TUBES
(AC PAVEMENT)

DESIGN APPROVED J.C. Cooper	ARIZONA DEPARTMENT OF TRANSPORTATION INFRASTRUCTURE DELIVERY AND OPERATIONS DIVISION ROADWAY GROUP PLANS DETAIL
APPROVED FOR DISTRIBUTION Mary Viparina	DETAIL SHEET DETAIL A01 (SHEET 2 OF 2)
ROUTE I-10 / LOCATION CRAYCROFT RD TI OP STR #594 & #595	DWG NO. G-04.02
TRACS NO. H 8774 01C	010-E(219)T ___ OF ___

Note to Designer:
The information presented in this Roadway Plans Detail is for general use. Designers should satisfy themselves that their project site conditions are appropriate for use of this drawing. Contents within the inner border shall not be altered, except for the addition of the Detail designation.

Date: 6/06/11

NO.	DESCRIPTION OF REVISIONS	MADE BY	DATE
1	REISSUED DRAWING WITH MODIFIED APPROACH TAPER	RLF	5/22/07
2	REVISED APPROACH TAPER CRITERIA	RLF	7/09/09
3	ADDED "LEAVEOUT" CALLOUT & REVISED SECTION VIEWS	RLF	6/06/11
4	ADDED "LEAVEOUT" DETAIL	RLF	6/06/11

F.H.W.A. REGION	STATE	PROJECT NO.	SHEET NO.	TOTAL SHEETS	RECORD DRAWING
9	ARIZ.	010-E(219)T	8	82	
		010 PM 267			

- FOR ELEVATIONS ABOVE 4,000', USE THE VALUES IN PARENTHESES

GENERAL NOTES

1. This detail is for roadway layout only.
2. The X-LITE shall be installed in accordance with the manufacturer's specifications and current approved drawings including all details, hardware, hardware quantities, and other information.

   The current manufacturer's approved drawing is number XLTSUS-50, 10/2014. Visit the Roadway Design web site to view and print the drawing.
3. The 50' W-Beam length shall consist of four 12'-6" sections.
4. See specifications and Traffic Signing and Marking Standard Drawings.
5. "Leaveouts" shall be provided in the AC pavement around guardrail posts 1 through 8. "Leaveouts" shall be filled flush to top of pavement with 3" (6" max) of CLSM grout having a 28 day compressive strength between 40 and 120 psi.
6. Posts 4 - 8 shall be steel line posts. Posts 1 - 3 are proprietary.
7. Post 9 shall be a CRT post for runs with wood line posts.

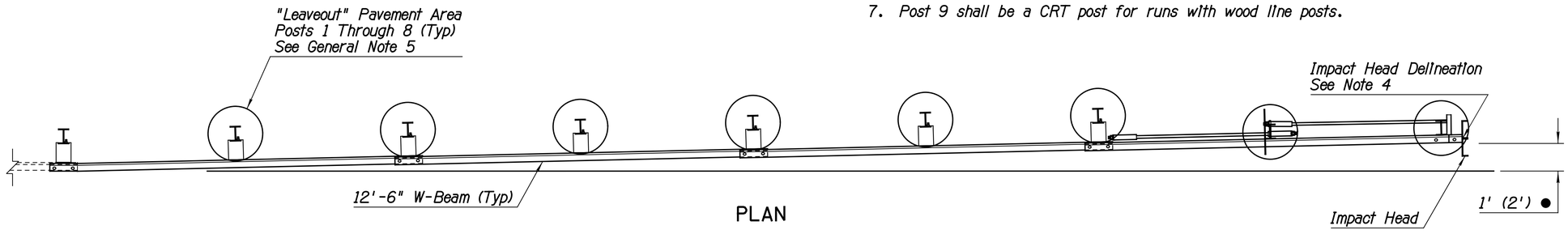

PLAN

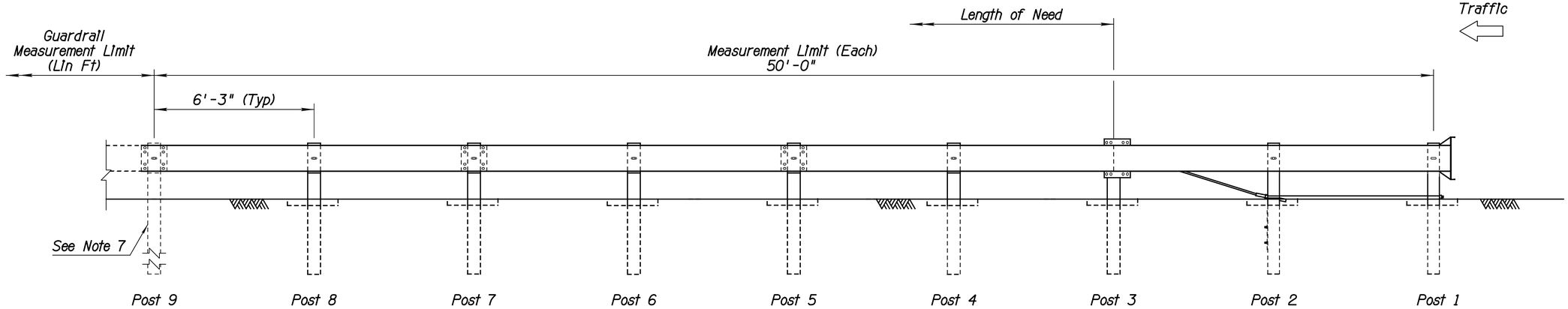

ELEVATION

DETAIL A02

Sheet 1 of 2

LAYOUT FOR X-LITE
TANGENT
(AC PAVEMENT)

DESIGN APPROVED J.C. Cooper	ARIZONA DEPARTMENT OF TRANSPORTATION INFRASTRUCTURE DELIVERY AND OPERATIONS DIVISION ROADWAY GROUP PLANS DETAIL
APPROVED FOR DISTRIBUTION Annette Riley	DETAIL SHEET DETAIL A02 (SHEET 1 OF 2)
ROUTE I-10 / LOCATION CRAYCROFT RD TI OP STR #594 & #595	DWG NO. G-04.03
TRACS NO. H 8774 01C	010-E(219)T / ___ OF ___

Date: 12/12/14

Note to Designer:
The information presented in this Roadway Plans Detail is for general use. Designers should satisfy themselves that their project site conditions are appropriate for use of this drawing. Contents within the inner border shall not be altered, except for the addition of the Detail designation.

NO	DESCRIPTION OF REVISIONS	MADE BY	DATE
1			
2			
3			
4			

● FOR ELEVATIONS ABOVE 4,000 FT, USE THE VALUES IN PARENTHESES

▲ Top of Rail = 28"
See General Note 1
Std Dwg C-10.03

F.H.W.A. REGION	STATE	PROJECT NO.	SHEET NO.	TOTAL SHEETS	RECORD DRAWING
9	ARIZ.	010-E(219)T	9	82	
		010 PM 267			

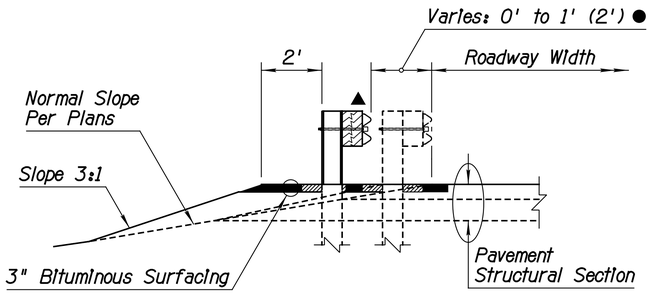

TYPE A SECTION

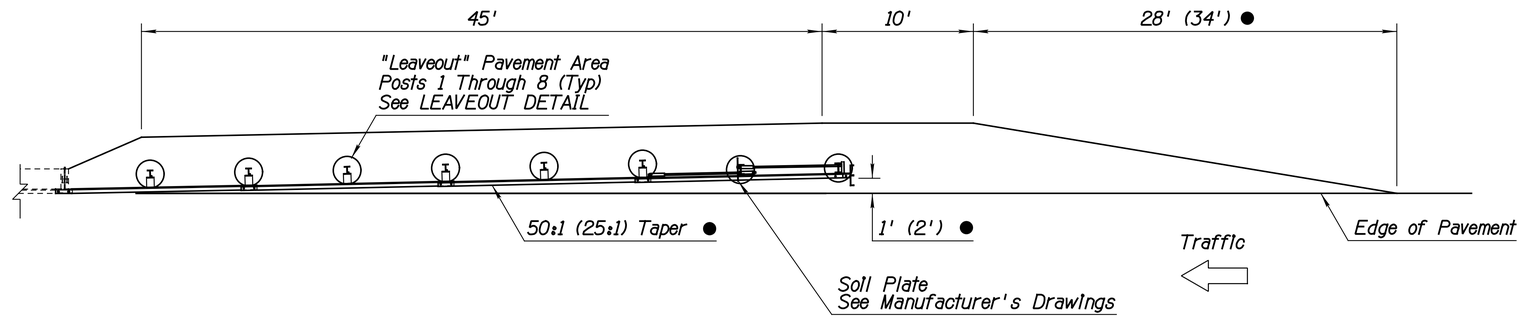

TYPE A GUARDRAIL INSTALLATION
(FACE OF RAIL AT EDGE OF PAVEMENT)

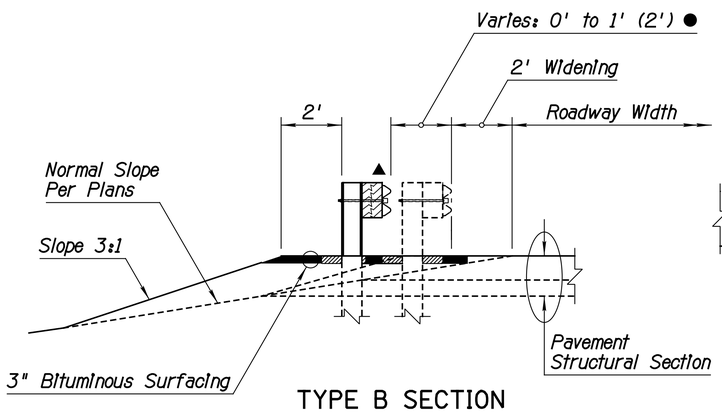

TYPE B SECTION

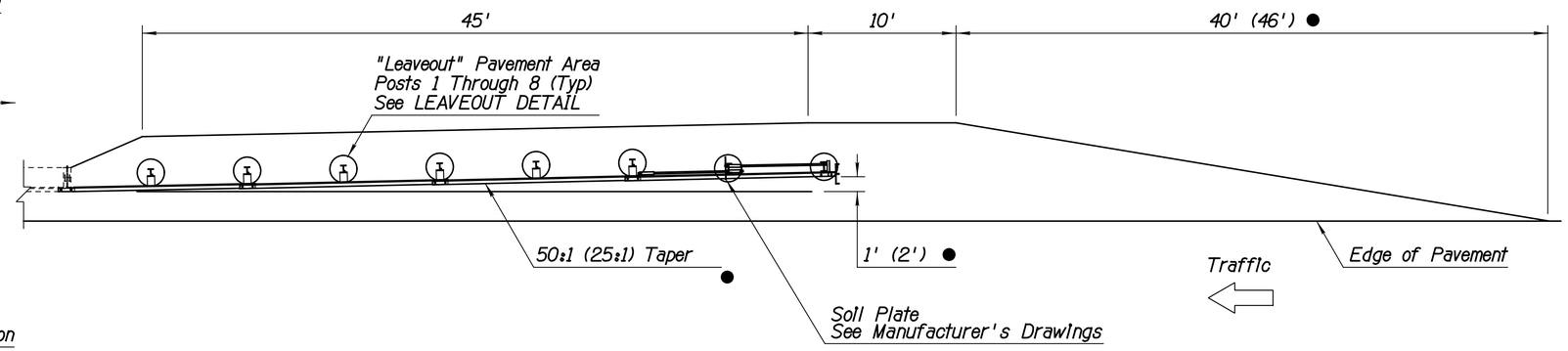

TYPE B GUARDRAIL INSTALLATION
(FACE OF RAIL OFFSET 2' FROM NORMAL EDGE OF PAVEMENT)

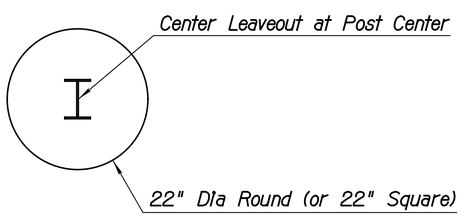

LEAVEOUT DETAIL

DETAIL A02

Sheet 2 of 2

LAYOUT FOR X-LITE
TANGENT
(AC PAVEMENT)

DESIGN APPROVED: J.C. Cooper	ARIZONA DEPARTMENT OF TRANSPORTATION INFRASTRUCTURE DELIVERY AND OPERATIONS DIVISION ROADWAY GROUP PLANS DETAIL
APPROVED FOR DISTRIBUTION: Annette Riley	DETAIL SHEET DETAIL A02 (SHEET 2 OF 2)
ROUTE: I-10 / LOCATION: CRAYCROFT RD TI OP STR #594 & #595	DWG NO. G-04.04
TRACS NO. H 8774 01C	010-E(219)T ___ OF ___

Date: 12/12/14

Note to Designer:
The information presented in this Roadway Plans Detail is for general use. Designers should satisfy themselves that their project site conditions are appropriate for use of this drawing. Contents within the inner border shall not be altered, except for the addition of the Detail designation.

NO	DESCRIPTION OF REVISIONS	MADE BY	DATE
1			
2			
3			
4			

F.H.W.A. REGION	STATE	PROJECT NO.	SHEET NO.	TOTAL SHEETS	RECORD DRAWING
9	ARIZ.	010-E(219)T	10	82	

010 PM 267

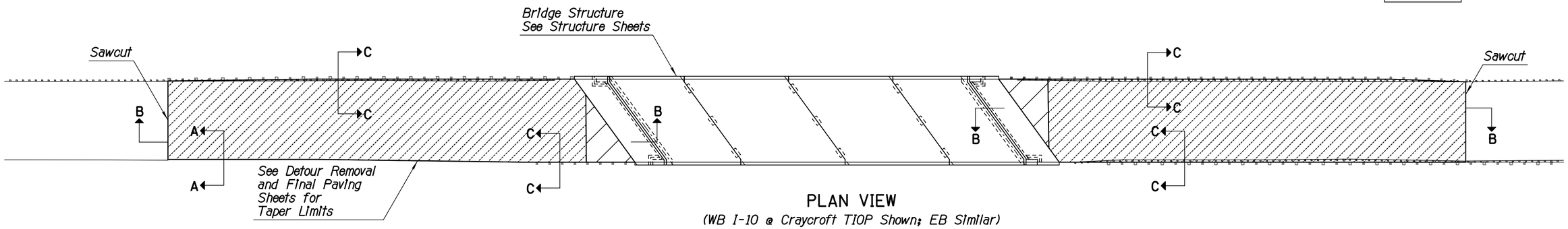

PLAN VIEW

(WB I-10 @ Craycroft TIOP Shown; EB Similar)

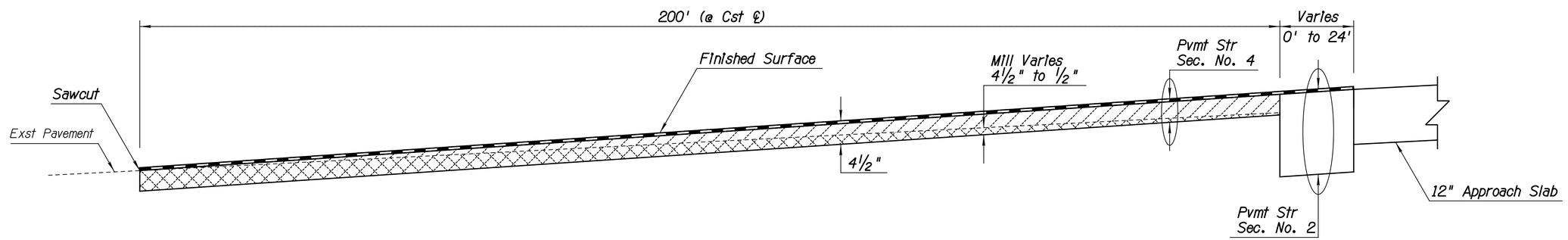

SECTION B-B

N.T.S.

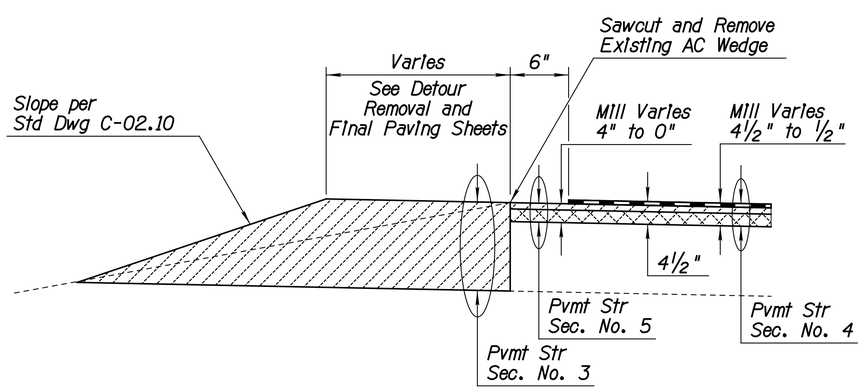

SECTION A-A

N.T.S.

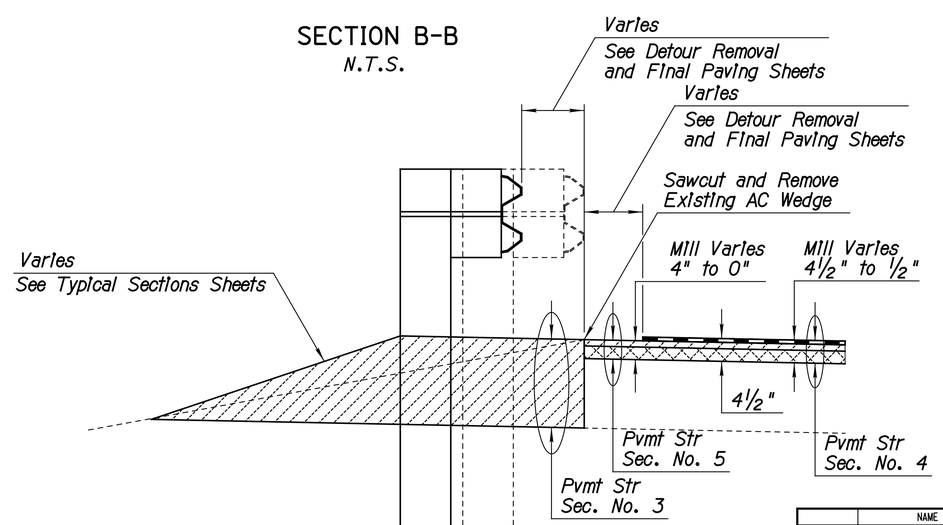

SECTION C-C

N.T.S.

LEGEND

- Final Paving Limits
- Mill and Replace
- Remove Approach Slab and Construct New Pavment

DETAIL B

PAVEMENT TRANSITION

	NAME	DATE
DESIGN	CEM	05-16
DRAWN	WKH	05-16
CHECKED	FLM	05-16

T.Y. LIN INTERNATIONAL
engineers | planners | scientists
60 E. Rio Salado Parkway, Suite 501
Tempe, Arizona 85281, Tel. 480-968-8814

ARIZONA DEPARTMENT OF TRANSPORTATION
INFRASTRUCTURE DELIVERY AND OPERATIONS DIVISION
ROADWAY DESIGN SERVICES

DETAIL SHEET
DETAIL B

Registered Professional Engineer (Civil) CERTIFICATE NO. 51336 CHRISTOPHER E. MILNER Date Signed 06/16/16 ARIZONA, U.S.A. Expires 9/30/2016

ROUTE	LOCATION
I-10	CRAYCROFT RD TI OP STR #594 & #595

DWG NO. G-04.05

TRACS NO. H 8774 01C | 010-E(219)T | ___ OF ___

Workspace: T:\Tempe\Legacy\CADD Standard\astation\projects\221867.00 Craycroft - Wilmot.pcf | Plot Driver: ...\Plotcfg\ADOT PDF FULL.pltl | Pentable: STDPLOT.TBL
SURVEY NO. | FINISHED PLANS- | REVISIONS- | LOCATION- | DATE- | SURVEY NO. | REVISIONS- | LOCATION-

CMilner 1:30:37 PM 6/16/2016 t:\tempe\projects\221867.00\600_cadd\05_official\delv files\Details\H8774detB.dgn

F.H.W.A. REGION	STATE	PROJECT NO.	SHEET NO.	TOTAL SHEETS	RECORD DRAWING
9	ARIZ.	010-E(219)T	11	82	
		010 PM 267			

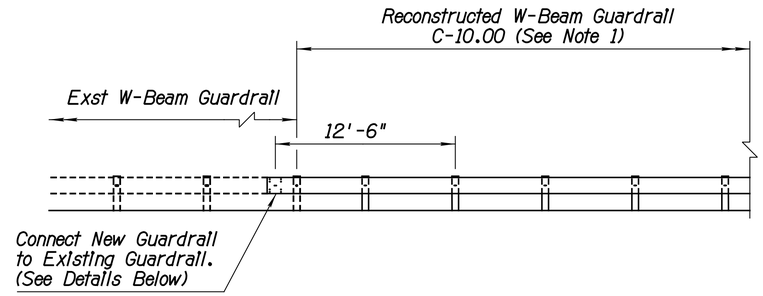

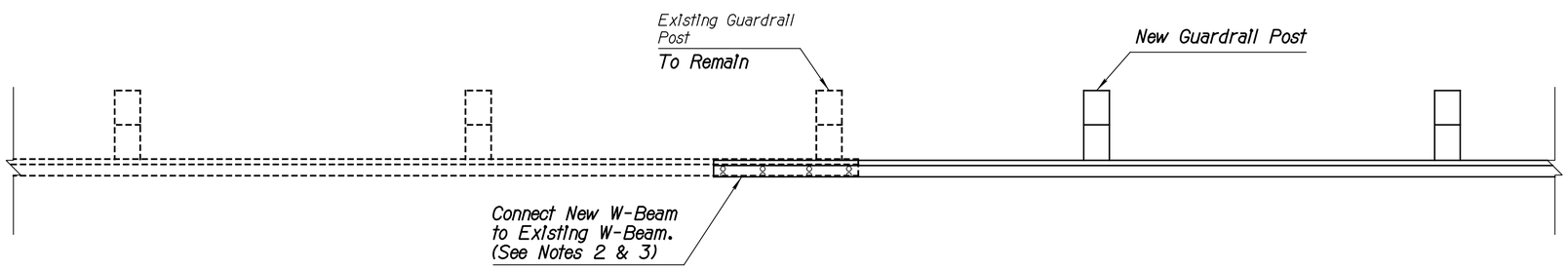

CONNECTION DETAIL - PLAN

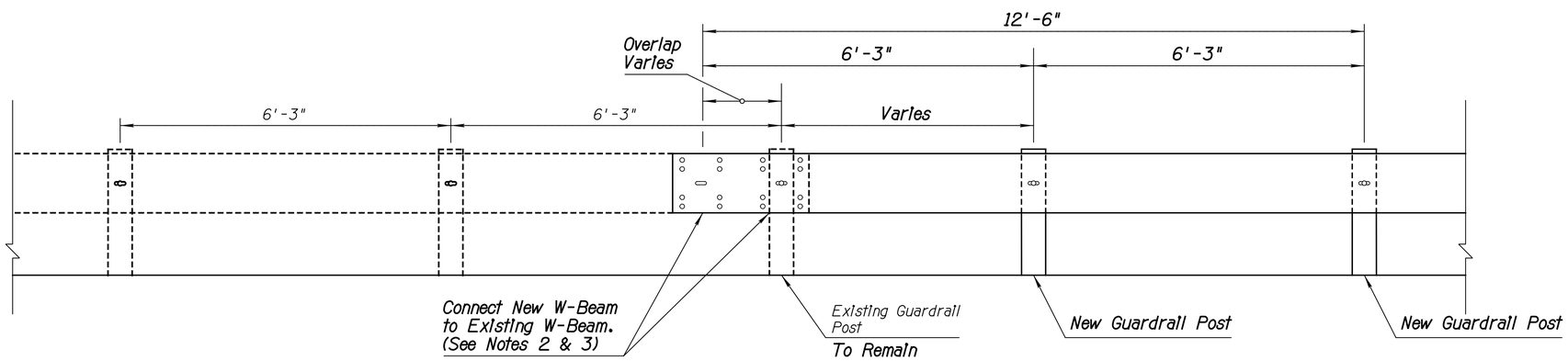

CONNECTION DETAIL - ELEVATION

DETAIL C

EXISTING GUARDRAIL CONNECTION

NOTES:

1. The contractor to Field Verify Distance Between Existing Guardrail Runs and Determine the Number of W-Beam Panels Required.
2. Lap W-Beam In the Direction of Adjacent Traffic and Field Drill for Connection to Existing W-Beam and Posts. Standard Length W-Beam Guardrail Shall be Used. Cutting of Guardrail Is Not Allowed.
3. Drill Holes and Bolt Panels Together at Both Ends of Overlap Per Std. C-10.03. If Overlap Is Less Than 2 Feet, Drill and Bolt at End Facing Roadway Only.
4. Field Drilled Holes Shall be Treated with 2 Coats of an Approved Zinc Paint. This Work Will Not be a Separate Pay Item and Will Be Included With Other Contract Pay Items.
5. No Additional Measurement or Payment will be made for Guardrail Connection. Cost of work considered to be Included In Guardrail Items.

	NAME	DATE
DESIGN	CEM	05-16
DRAWN	WKH	05-16
CHECKED	FLM	05-16

T·Y·LIN INTERNATIONAL
engineers | planners | scientists
60 E. Rio Salado Parkway, Suite 501
Tempe, Arizona 85281, Tel. 480-968-8814

ARIZONA DEPARTMENT OF TRANSPORTATION
INFRASTRUCTURE DELIVERY AND OPERATIONS DIVISION
ROADWAY DESIGN SERVICES

DETAIL SHEET
DETAIL C

Registered Professional Engineer (Civil)
CERTIFICATE NO. 51336
CHRISTOPHER E. MILNER
Date Signed 06/16/16
ARIZONA, U.S.A.
Expires 9/30/2016

ROUTE	LOCATION
I-10	CRAYCROFT RD TI OP STR #594 & #595

DWG NO. G-04.06

TRACS NO. H 8774 01C | 010-E(219)T | ___ OF ___

Workspace: T:\Tempe\Legacy\CADD_Standard\station\projects\221867.00 Craycroft - Willmot.pcf | Plot Driver: ...\Plotcfg\ADOT_PDF_FULL.plt | Pentable: STDPLOT.TBL
SURVEY NO. | FINISHED PLANS- | REVISIONS- | LOCATION- | DATE- | SURVEY NO. | REVISIONS- | LOCATION-

F.H.W.A. REGION	STATE	PROJECT NO.	SHEET NO.	TOTAL SHEETS	RECORD DRAWING
9	ARIZ.	010-E(219)T	12	82	

010 PM 267

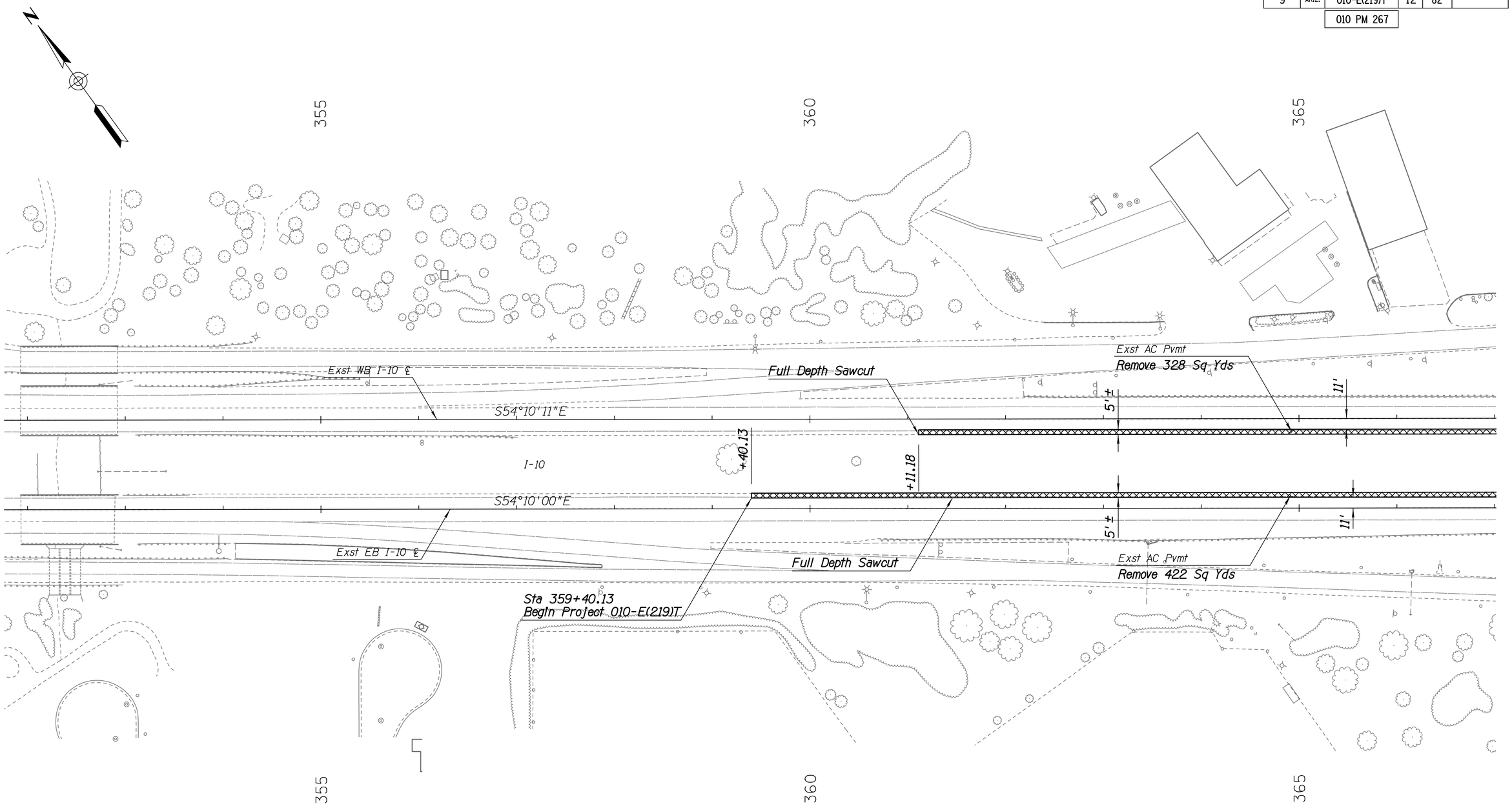

	NAME	DATE
DESIGN	CEM	05-16
DRAWN	WKH	05-16
CHECKED	FLM	05-16

T·Y·LIN INTERNATIONAL
engineers | planners | scientists
60 E. Rio Salado Parkway, Suite 501
Tempe, Arizona 85281, Tel. 480-968-8814

ARIZONA DEPARTMENT OF TRANSPORTATION
INFRASTRUCTURE DELIVERY AND OPERATIONS DIVISION
ROADWAY DESIGN SERVICES

I-10 CRAYCROFT
REMOVAL SHEETS

Registered Professional Engineer (Civil)
CERTIFICATE NO. 51336
CHRISTOPHER E. MILNER
Date Signed 06/16/16
ARIZONA, U.S.A.
Expires 9/30/2016

ROUTE	LOCATION
I-10	CRAYCROFT RD TI OP STR #594 & #595

DWG NO. C-01.01

TRACS NO. H 8774 01C | 010-E(219)T | ___ OF ___

Workspace: T:\Tempe\Legacy\CADD Standards\station\projects\221867.00 Craycroft - Wilmot.pcf | Plot Driver: ...\Plotdrg\ADOT PDF_FULL.plt | Pentable: STDPLOT.TBL
SURVEY NO. | FINISHED PLANS- | REVISIONS- | LOCATION- | DATE- | SURVEY NO. | REVISIONS- | LOCATION-

CMilner 1:30:44 PM 6/16/2016 t:\tempe\projects\221867.00\600_cadd\05_official\delv files\Paving\H8774r01.dgn

F.H.W.A. REGION	STATE	PROJECT NO.	SHEET NO.	TOTAL SHEETS	RECORD DRAWING
9	ARIZ.	010-E(219)T	13	82	

010 PM 267

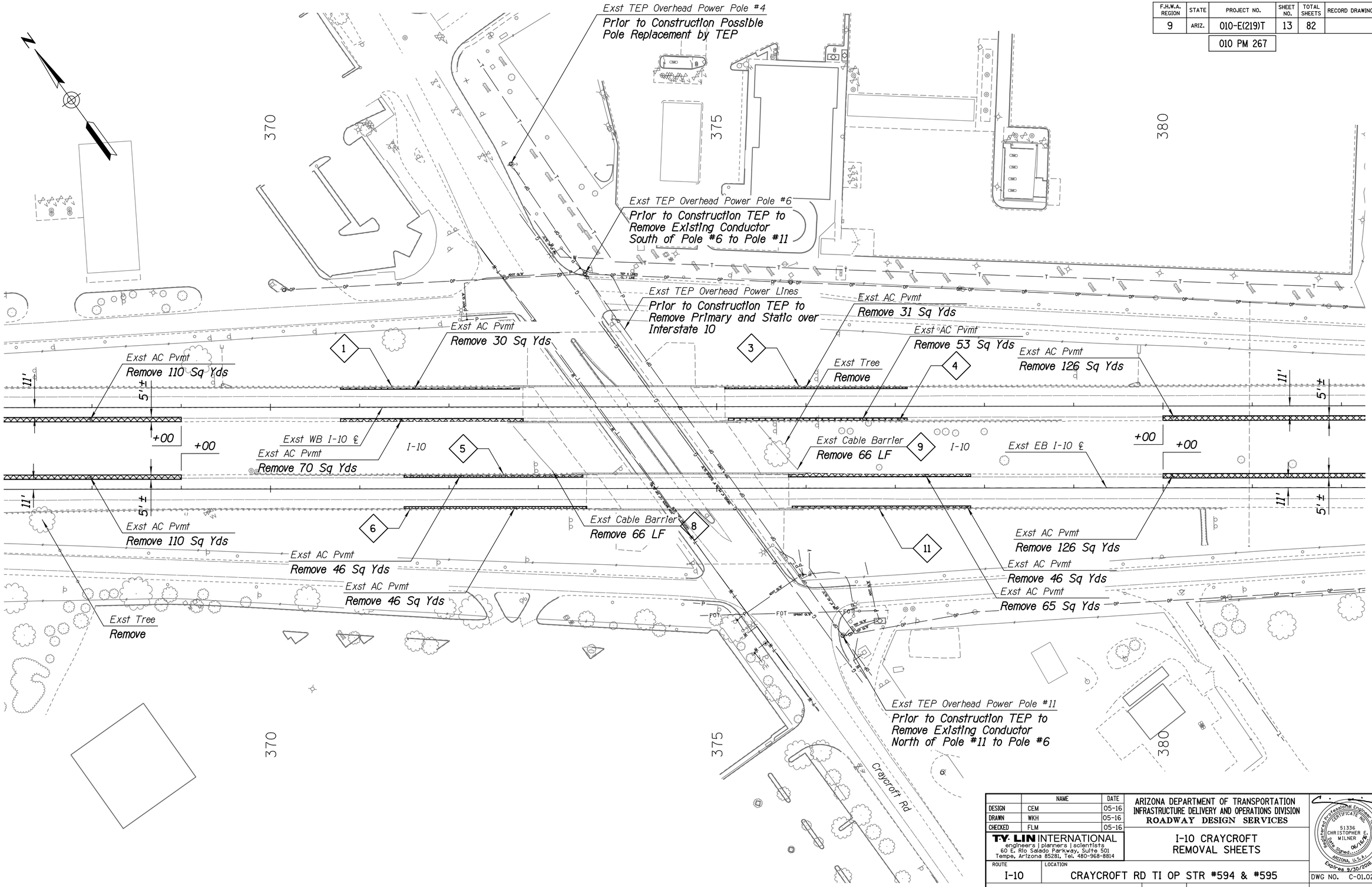

	NAME	DATE
DESIGN	CEM	05-16
DRAWN	WKH	05-16
CHECKED	FLM	05-16

T·Y·LIN INTERNATIONAL
engineers | planners | scientists
60 E. Rio Salado Parkway, Suite 501
Tempe, Arizona 85281, Tel. 480-968-8814

ARIZONA DEPARTMENT OF TRANSPORTATION
INFRASTRUCTURE DELIVERY AND OPERATIONS DIVISION
ROADWAY DESIGN SERVICES

I-10 CRAYCROFT
REMOVAL SHEETS

Registered Professional Engineer (Civil)
CERTIFICATE NO. 51336
CHRISTOPHER E. MILNER
Date Signed 06/16/16
ARIZONA, U.S.A.
Expires 9/30/2016

ROUTE	LOCATION
I-10	CRAYCROFT RD TI OP STR #594 & #595

DWG NO. C-01.02

TRACS NO. H 8774 01C | 010-E(219)T | ___ OF ___

Workspace: T:\Tempe\Legacy\CADD_Standard\station\projects\221867.00 Craycroft - Willmot.pcf | Plot Driver: ...\Plotdrg\ADOT PDF_FULL.pltt | Pentable: STDPLOT.TBL
SURVEY NO. | FINISHED PLANS | REVISIONS | LOCATION | DATE | SURVEY NO. | REVISIONS | LOCATION

CMilner 1:30:46 PM 6/16/2016 t:\tempe\projects\221867.00\600_cadd\05_official\delv files\Paving\H8774r02.dgn

F.H.W.A. REGION	STATE	PROJECT NO.	SHEET NO.	TOTAL SHEETS	RECORD DRAWING
9	ARIZ.	010-E(219)T	14	82	

010 PM 267

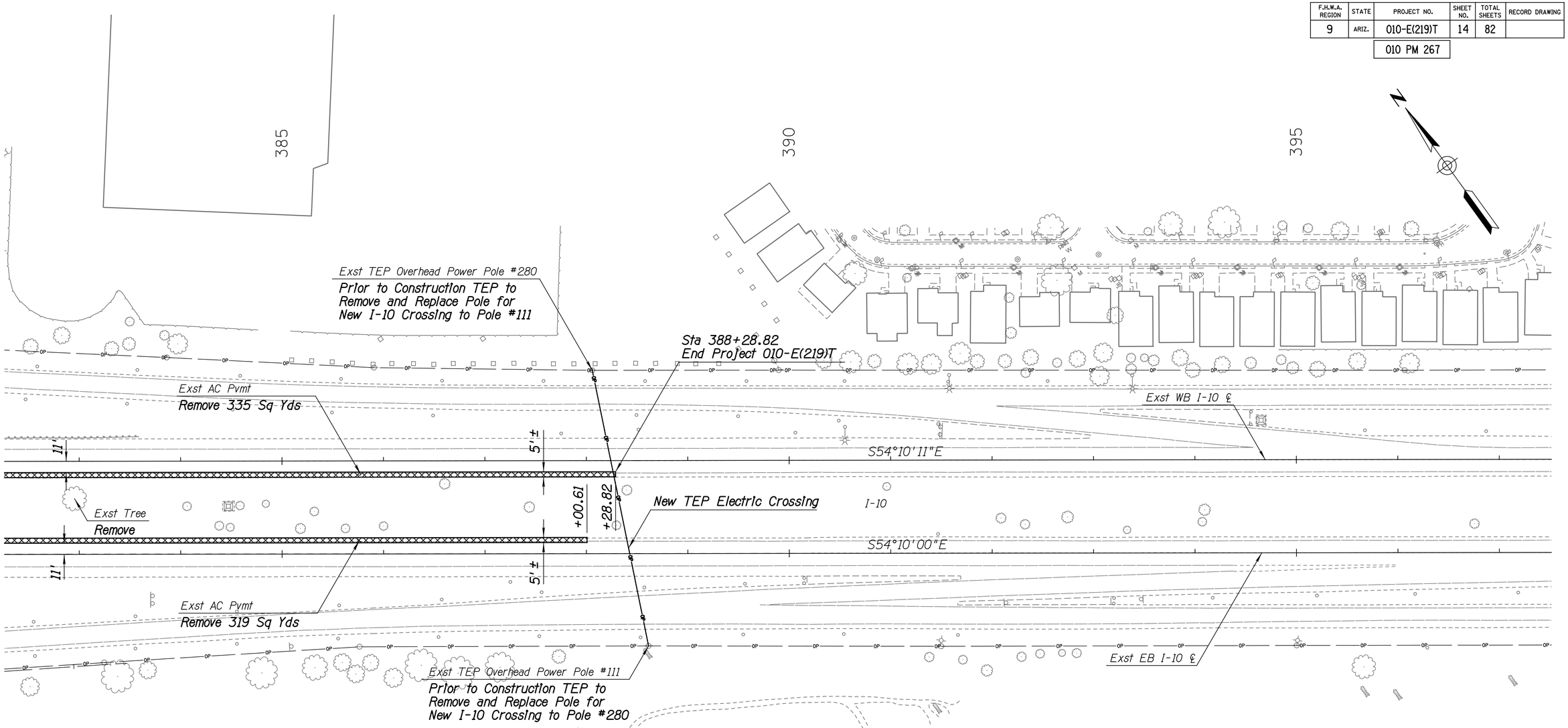

	NAME	DATE
DESIGN	CEM	05-16
DRAWN	WKH	05-16
CHECKED	FLM	05-16

T.Y. LIN INTERNATIONAL
engineers | planners | scientists
60 E. Rio Salado Parkway, Suite 501
Tempe, Arizona 85281, Tel. 480-968-8814

ARIZONA DEPARTMENT OF TRANSPORTATION
INFRASTRUCTURE DELIVERY AND OPERATIONS DIVISION
ROADWAY DESIGN SERVICES

I-10 CRAYCROFT
REMOVAL SHEETS

Registered Professional Engineer (Civil)
CERTIFICATE NO. 51336
CHRISTOPHER E. MILNER
Date Signed 06/16/16
ARIZONA, U.S.A.
Expires 9/30/2016

ROUTE	LOCATION
I-10	CRAYCROFT RD TI OP STR #594 & #595

DWG NO. C-01.03

TRACS NO. H 8774 01C | 010-E(219)T | ____ OF ____

Workspace: T:\Tempe\Legacy\CADD Standards\standards\projects\221867.00 Craycroft - Wilmot.pcf | Plot Driver: ...\Plotcfg\ADOT_PDF_FULL.pltl | Pentable: STDPLOT.TBL
SURVEY NO. | FINISHED PLANS- | REVISIONS- | LOCATION- | DATE- | REVISIONS- | LOCATION-

CMilner 1:30:48 PM 6/16/2016 t:\tempe\projects\221867.00\600_cadd\05_official\delv files\Paving\H8774r03.dgn

F.H.W.A. REGION	STATE	PROJECT NO.	SHEET NO.	TOTAL SHEETS	RECORD DRAWING
9	ARIZ.	010-E(219)T	15	82	

010 PM 267

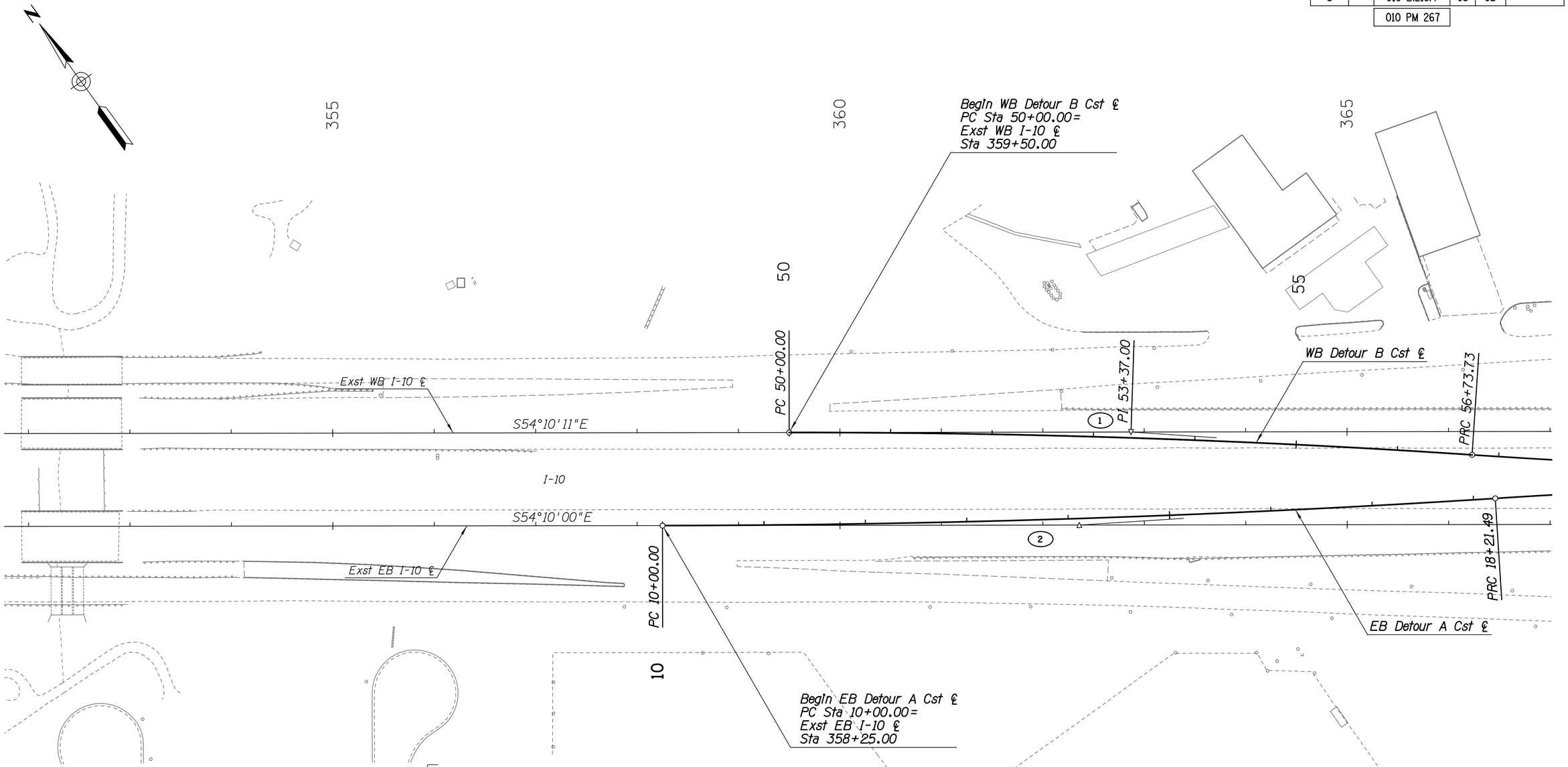

① CURVE DATA

PI Sta 53+37.00

Main Curve
Δ=3°53'54"
D=0°34'43"
R=9,902.00
L=673.73
T=337.00
Ext=5.73
Super=N/A

② CURVE DATA

PI Sta 14+10.88

Main Curve
Δ=3°35'23"
D=0°26'13"
R=13,112.00
L=821.49
T=410.88
Ext=6.44
Super=N/A

	NAME	DATE
DESIGN	CEM	05-16
DRAWN	WKH	05-16
CHECKED	FLM	05-16

T.Y. LIN INTERNATIONAL
engineers | planners | scientists
60 E. Rio Salado Parkway, Suite 501
Tempe, Arizona 85281, Tel. 480-968-8814

ARIZONA DEPARTMENT OF TRANSPORTATION
INFRASTRUCTURE DELIVERY AND OPERATIONS DIVISION
ROADWAY DESIGN SERVICES

I-10 CRAYCROFT
DETOUR GEOMETRY PLANS

Registered Professional Engineer (Civil)
CERTIFICATE NO. 51336
CHRISTOPHER E. MILNER
Date Signed 06/16/16
ARIZONA, U.S.A.
Expires 9/30/2016

ROUTE	LOCATION
I-10	CRAYCROFT RD TI OP STR #594 & #595

DWG NO. C-02.01

TRACS NO. H 8774 01C | 010-E(219)T | ___ OF ___

Workspace: T:\Tempe\Legacy\CADD_Standards\station\projects\221867.00 Craycroft - Wilmot.pcf
Plot Driver: ...\Plotcfg\ADOT PDF FULL.plt
Pentable: STDPLOT.TBL
SURVEY NO. | FINISHED PLANS- | REVISIONS- | LOCATION- | DATE- | SURVEY NO. | REVISIONS- | LOCATION-

CMilner 1:30:49 PM 6/16/2016 t:\tempe\projects\221867.00\600_cadd\05_official\delv files\Paving\H8774p01_DET.dgn

F.H.W.A. REGION	STATE	PROJECT NO.	SHEET NO.	TOTAL SHEETS	RECORD DRAWING
9	ARIZ.	010-E(219)T	16	82	

010 PM 267

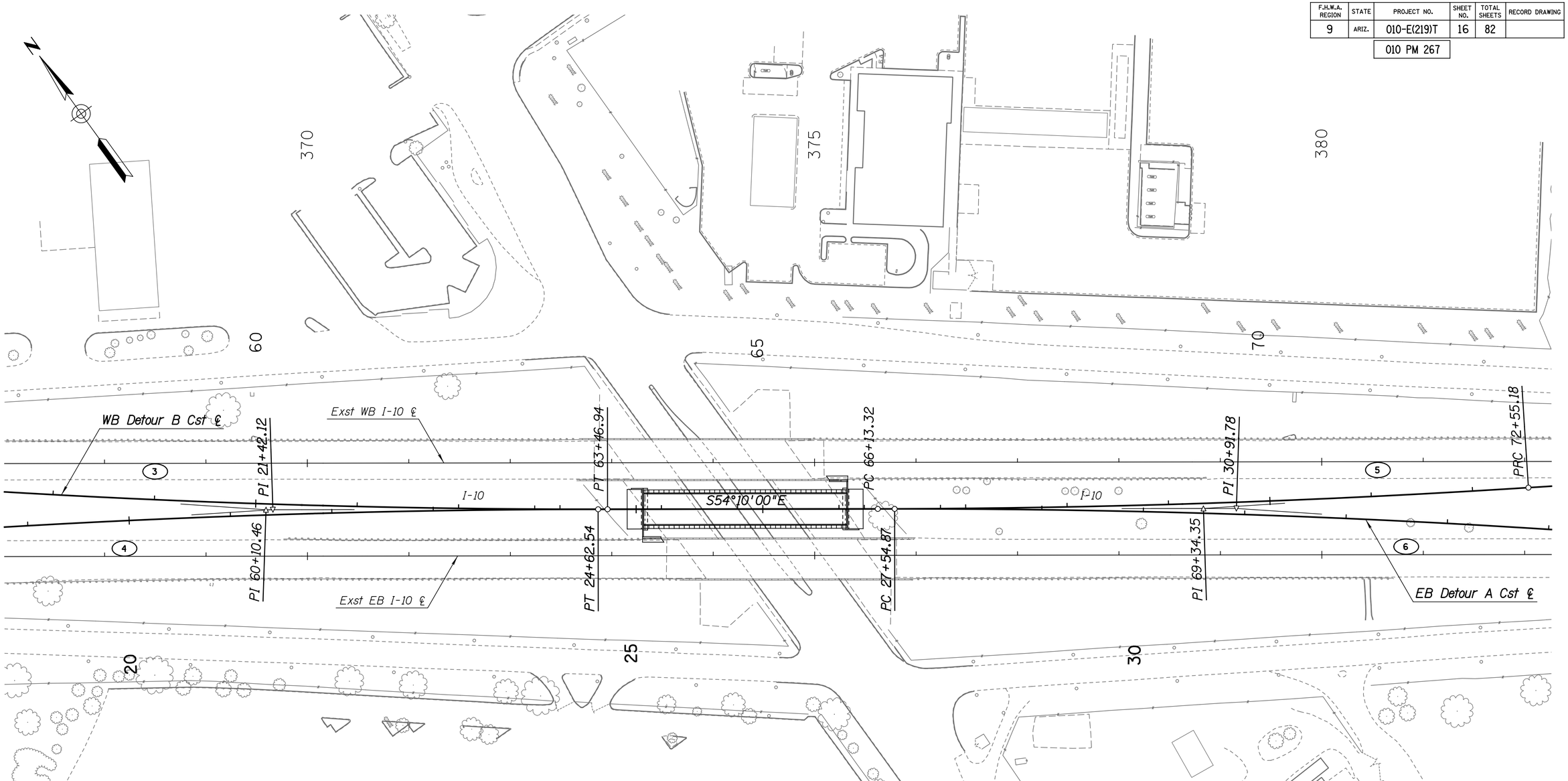

3 CURVE DATA

PI Sta 60+10.46

Main Curve
Δ=3°53'43"
D=0°34'43"
R=9,902.00
L=673.20
T=336.73
Ext=5.72
Super=N/A

4 CURVE DATA

PI Sta 21+42.12

Main Curve
Δ=3°35'23"
D=0°33'36"
R=10,232.00
L=641.05
T=320.63
Ext=5.02
Super=N/A

5 CURVE DATA

PI Sta 69+34.35

Main Curve
Δ=3°35'39"
D=0°33'36"
R=10,232.00
L=641.86
T=321.03
Ext=5.04
Super=N/A

6 CURVE DATA

PI Sta 30+91.78

Main Curve
Δ=3°53'51"
D=0°34'43"
R=9,902.00
L=673.56
T=336.91
Ext=5.73
Super=N/A

	NAME	DATE
DESIGN	CEM	05-16
DRAWN	WKH	05-16
CHECKED	FLM	05-16

T.Y. LIN INTERNATIONAL
engineers | planners | scientists
60 E. Rio Salado Parkway, Suite 501
Tempe, Arizona 85281, Tel. 480-968-8814

ARIZONA DEPARTMENT OF TRANSPORTATION
INFRASTRUCTURE DELIVERY AND OPERATIONS DIVISION
ROADWAY DESIGN SERVICES

I-10 CRAYCROFT
DETOUR GEOMETRY PLANS

Registered Professional Engineer (Civil) CERTIFICATE NO. 51336 CHRISTOPHER E. MILNER Date Signed 06/16/16 ARIZONA, U.S.A. Expires 9/30/2016

ROUTE	LOCATION
I-10	CRAYCROFT RD TI OP STR #594 & #595

DWG NO. C-02.02

TRACS NO. H 8774 01C | 010-E(219)T | ___ OF ___

Workspace: T:\Tempe\Legacy\CADD_Standards\astation\projects\221867.00 Craycroft - Wllmd.pcf | Plot Driver: ...\Plotcfg\ADOT PDF FULL.plt | Pentable: STDPLOT.TBL
SURVEY NO. | FINISHED PLANS- | REVISIONS- | LOCATION- | DATE- | SURVEY NO. | REVISIONS- | LOCATION-

CMilner 1:30:50 PM 6/16/2016 t:\tempe\projects\221867.00\600_cadd\05_official\delv files\Paving\H8774p02_DET.dgn

F.H.W.A. REGION	STATE	PROJECT NO.	SHEET NO.	TOTAL SHEETS	RECORD DRAWING
9	ARIZ.	010-E(219)T	17	82	

010 PM 267

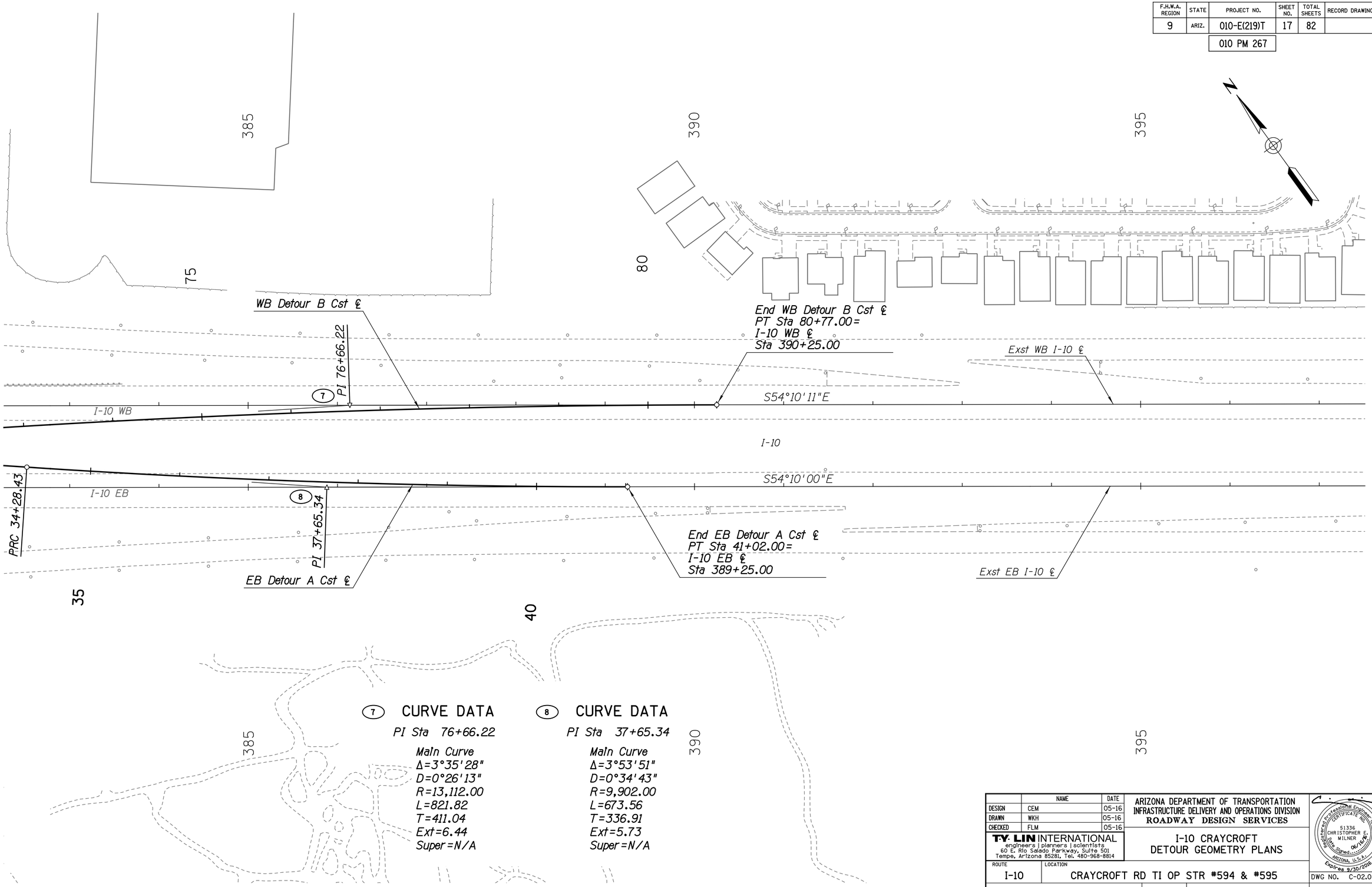

7 CURVE DATA

PI Sta 76+66.22

Main Curve
Δ=3°35'28"
D=0°26'13"
R=13,112.00
L=821.82
T=411.04
Ext=6.44
Super=N/A

8 CURVE DATA

PI Sta 37+65.34

Main Curve
Δ=3°53'51"
D=0°34'43"
R=9,902.00
L=673.56
T=336.91
Ext=5.73
Super=N/A

	NAME	DATE
DESIGN	CEM	05-16
DRAWN	WKH	05-16
CHECKED	FLM	05-16

T·Y·LIN INTERNATIONAL
engineers | planners | scientists
60 E. Rio Salado Parkway, Suite 501
Tempe, Arizona 85281, Tel. 480-968-8814

ARIZONA DEPARTMENT OF TRANSPORTATION
INFRASTRUCTURE DELIVERY AND OPERATIONS DIVISION
ROADWAY DESIGN SERVICES

I-10 CRAYCROFT
DETOUR GEOMETRY PLANS

Registered Professional Engineer (Civil)
CERTIFICATE NO. 51336
CHRISTOPHER E. MILNER
06/16/16
Date Signed
ARIZONA, U.S.A.
Expires 9/30/2016

ROUTE	LOCATION
I-10	CRAYCROFT RD TI OP STR #594 & #595

DWG NO. C-02.03

TRACS NO. H 8774 01C | 010-E(219)T | ___ OF ___

Workspace: T:\Tempe\Legacy\CADD_Standard\station\projects\221867.00 Craycroft - Willmot.pcf
Plot Driver: ...\Plotcfg\ADOT PDF_FULL.plt
Pentable: STDPLOT.TBL
SURVEY NO.
FINISHED PLANS
REVISIONS
LOCATION
DATE
SURVEY NO.
REVISIONS
LOCATION

CMilner 1:30:51 PM 6/16/2016 t:\tempe\projects\221867.00\600_cadd\05_official\delv files\Paving\H8774p03_DET.dgn

F.H.W.A. REGION	STATE	PROJECT NO.	SHEET NO.	TOTAL SHEETS	RECORD DRAWING
9	ARIZ.	010-E(219)T	18	82	
		010 PM 267			

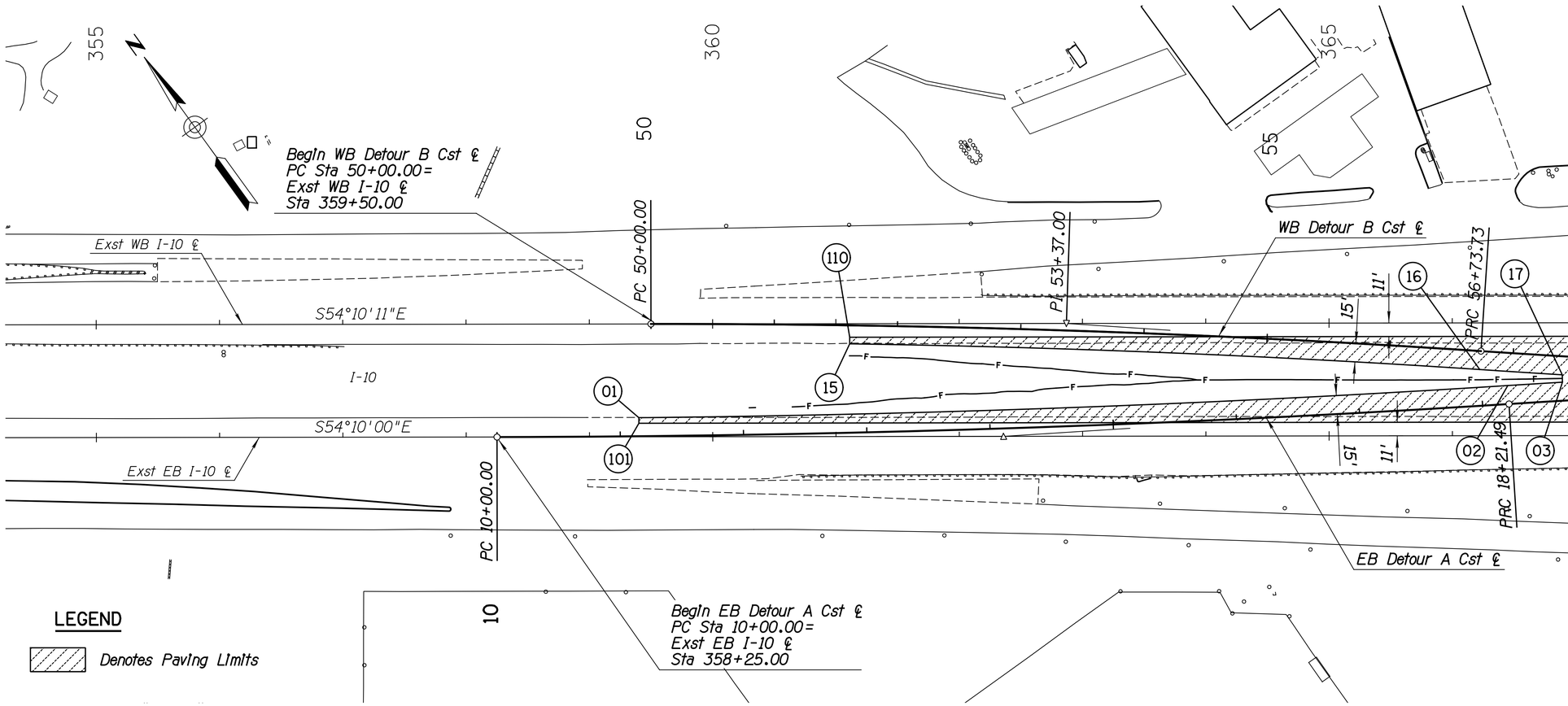

LEGEND

Denotes Paving Limits

WB I-10 Edge			
Point ID	Station	Offset	Elevation
110	361+11.18	11.00	2715.58
	361+25.00	11.00	2715.97
	361+50.00	11.00	2716.63
	361+75.00	11.00	2717.32
	362+00.00	11.00	2718.08
	362+25.00	11.00	2718.79
	362+50.00	11.00	2719.52
	362+75.00	11.00	2720.25
	363+00.00	11.00	2720.97
	363+25.00	11.00	2721.74
	363+50.00	11.00	2722.41
	363+75.00	11.00	2723.08
	364+00.00	11.00	2723.79
	364+25.00	11.00	2724.49
	364+50.00	11.00	2725.19
	364+75.00	11.00	2725.96
	365+00.00	11.00	2726.72
	365+25.00	11.00	2727.45
	365+50.00	11.00	2728.14
	365+75.00	11.00	2728.77
	366+00.00	11.00	2729.34
	366+25.00	11.00	2729.96
	366+50.00	11.00	2730.60
	366+75.00	11.00	2731.26
	367+00.00	11.00	2731.82

EB Detour A Edge			
Point ID	Station	Offset	Elevation
01	11+15.26	-15.00	2711.91
	11+25.00	-15.00	2712.06
	11+50.00	-15.00	2712.44
	11+75.00	-15.00	2712.88
	12+00.00	-15.00	2713.39
	12+25.00	-15.00	2713.90
	12+50.00	-15.00	2714.45
	12+75.00	-15.00	2715.03
	13+00.00	-15.00	2715.64
	13+25.00	-15.00	2716.29
	13+50.00	-15.00	2716.97
	13+75.00	-15.00	2717.64
	14+00.00	-15.00	2718.31
	14+25.00	-15.00	2718.98
	14+50.00	-15.00	2719.69
	14+75.00	-15.00	2720.42
	15+00.00	-15.00	2721.07
	15+25.00	-15.00	2721.73
	15+50.00	-15.00	2722.43
	15+75.00	-15.00	2723.11
	16+00.00	-15.00	2723.81
	16+25.00	-15.00	2724.54
	16+50.00	-15.00	2725.27
	16+75.00	-15.00	2725.93
	17+00.00	-15.00	2726.58

EB Detour A Edge			
Point ID	Station	Offset	Elevation
	17+25.00	-15.00	2727.26
	17+50.00	-15.00	2727.99
	17+75.00	-15.00	2728.65
	18+00.00	-15.00	2729.28
02	18+21.49	-15.00	2729.81
	18+25.00	-15.00	2729.90
	18+50.00	-15.00	2730.52
03	18+65.80	-15.00	2730.97

WB Detour B Edge			
Point ID	Station	Offset	Elevation
15	51+61.43	15.00	2715.51
	52+00.00	15.00	2716.53
	52+25.00	15.00	2717.22
	52+50.00	15.00	2717.96
	52+75.00	15.00	2718.67
	53+00.00	15.00	2719.38
	53+25.00	15.00	2720.11
	53+50.00	15.00	2720.81
	53+75.00	15.00	2721.56
	54+00.00	15.00	2722.22
	54+25.00	15.00	2722.88
	54+50.00	15.00	2723.57
	54+75.00	15.00	2724.25
	55+00.00	15.00	2724.94
	55+25.00	15.00	2725.69
	55+50.00	15.00	2726.43
	55+75.00	15.00	2727.14
	56+00.00	15.00	2727.81
	56+25.00	15.00	2728.42
	56+50.00	15.00	2728.97
16	56+73.73	15.00	2729.54
	56+75.00	15.00	2729.57
	57+00.00	15.00	2730.18
	57+25.00	15.00	2730.82
17	57+40.72	15.00	2731.08

EB I-10 Edge			
Point ID	Station	Offset	Elevation
101	359+40.13	-11.00	2711.84
	359+50.00	-11.00	2711.92
	359+75.00	-11.00	2712.36
	360+00.00	-11.00	2712.80
	360+25.00	-11.00	2713.30
	360+50.00	-11.00	2713.82
	360+75.00	-11.00	2714.36
	361+00.00	-11.00	2714.93
	361+25.00	-11.00	2715.53
	361+50.00	-11.00	2716.17
	361+75.00	-11.00	2716.84
	362+00.00	-11.00	2717.51
	362+25.00	-11.00	2718.17
	362+50.00	-11.00	2718.83
	362+75.00	-11.00	2719.52
	363+00.00	-11.00	2720.23

EB I-10 Edge			
Point ID	Station	Offset	Elevation
	363+25.00	-11.00	2720.87
	363+50.00	-11.00	2721.51
	363+75.00	-11.00	2722.19
	364+00.00	-11.00	2722.86
	364+25.00	-11.00	2723.56
	364+50.00	-11.00	2724.25
	364+75.00	-11.00	2724.96
	365+00.00	-11.00	2725.61
	365+25.00	-11.00	2726.24
	365+50.00	-11.00	2726.89
	365+75.00	-11.00	2727.60
	366+00.00	-11.00	2728.24
	366+25.00	-11.00	2728.85
	366+50.00	-11.00	2729.44
	366+75.00	-11.00	2730.04
	367+00.00	-11.00	2730.63

	NAME	DATE
DESIGN	CEM	05-16
DRAWN	WKH	05-16
CHECKED	FLM	05-16

T·Y·LIN INTERNATIONAL
engineers | planners | scientists
60 E. Rio Salado Parkway, Suite 501
Tempe, Arizona 85281, Tel. 480-968-8814

ARIZONA DEPARTMENT OF TRANSPORTATION
INFRASTRUCTURE DELIVERY AND OPERATIONS DIVISION
ROADWAY DESIGN SERVICES

I-10 CRAYCROFT
DETOUR STAKING SHEET

ROUTE: I-10
LOCATION: CRAYCROFT RD TI OP STR #594 & #595

TRACS NO. H 8774 01C
010-E(219)T

Registered Professional Engineer (Civil) CERTIFICATE NO. 51336 CHRISTOPHER E. MILNER Date Signed 06/16/16 ARIZONA, U.S.A. Expires 9/30/2016

DWG NO. C-03.01
___ OF ___

Workspace: T:\Tempe\Legacy\CADD Standardisation\projects\221867.00 Craycroft - Wilmot.pcf | Plot Driver: ...\Plotcfg\ADOT_PDF_FULL.pltcfg | Pentable: STDPLOT.TBL
SURVEY NO. | FINISHED PLANS | REVISIONS | LOCATION | DATE | REVISIONS | LOCATION

CMilner 1:30:53 PM 6/16/2016 t:\tempe\projects\221867.00\600_cadd\05_official\delv files\Paving\H8774DTST01.dgn

F.H.W.A. REGION	STATE	PROJECT NO.	SHEET NO.	TOTAL SHEETS	RECORD DRAWING
9	ARIZ.	010-E(219)T	19	82	
		010 PM 267			

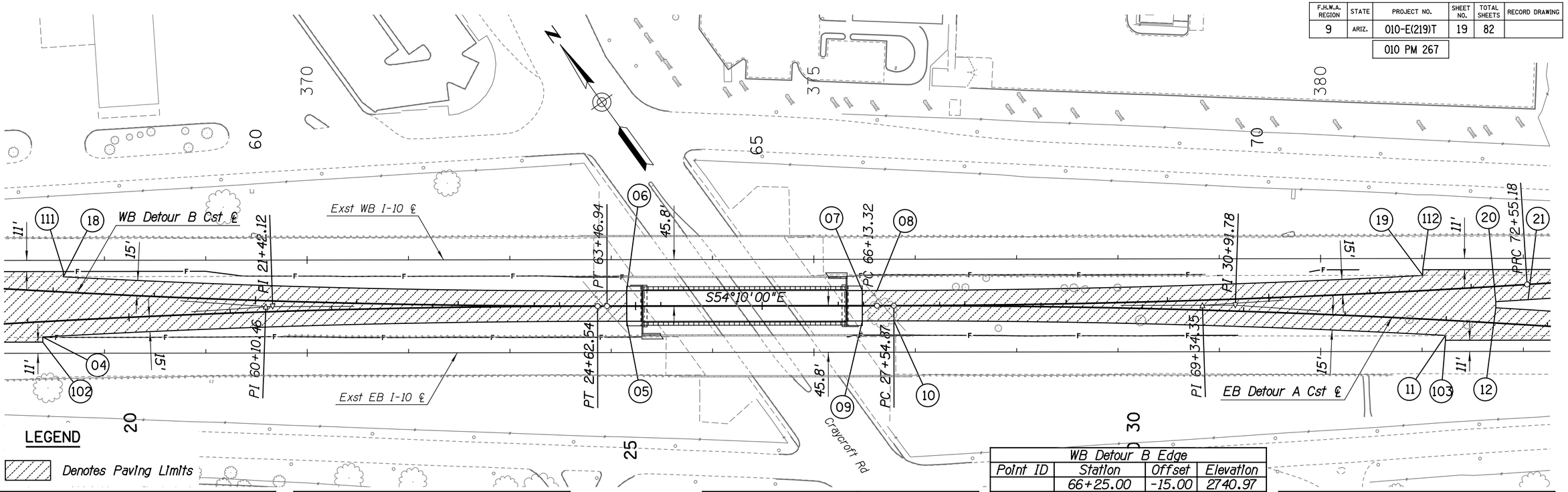

LEGEND

Denotes Paving Limits

EB Detour A Edge			
Point ID	Station	Offset	Elevation
04	19+13.93	15.00	2731.60
	19+25.00	15.00	2731.83
	19+50.00	15.00	2732.33
	19+75.00	15.00	2732.90
	20+00.00	15.00	2733.45
	20+25.00	15.00	2733.97
	20+50.00	15.00	2734.47
	20+75.00	15.00	2734.94
	21+00.00	15.00	2735.40
	21+25.00	15.00	2735.82
	21+50.00	15.00	2736.23
	21+75.00	15.00	2736.61
	22+00.00	15.00	2736.96
	22+25.00	15.00	2737.29
	22+50.00	15.00	2737.60
	22+75.00	15.00	2737.88
	23+00.00	15.00	2738.14
	23+25.00	15.00	2738.38
	23+50.00	15.00	2738.59
	23+75.00	15.00	2738.78
	24+00.00	15.00	2738.98
	24+25.00	15.00	2739.15
	24+50.00	15.00	2739.31
	24+75.00	15.00	2739.48
05	24+91.21	15.00	2739.56
06	24+91.21	-15.00	2739.71
07	27+23.71	-15.00	2740.87
	27+25.00	-15.00	2740.88
08	27+38.24	-15.00	2740.93
09	27+23.71	15.00	2740.72
	27+25.00	15.00	2740.73
	27+50.00	15.00	2740.84

EB Detour A Edge					
Point ID	Station	Offset	Elevation	Offset	Elevation
10	27+54.87	15.00	2740.86	0.00	2740.95
	27+75.00	15.00	2740.94	0.00	2741.05
	28+00.00	15.00	2741.03	0.00	2741.16
	28+25.00	15.00	2741.08	0.00	2741.23
	28+50.00	15.00	2741.10	0.00	2741.27
	28+75.00	15.00	2741.09	0.00	2741.28
	29+00.00	15.00	2741.04	0.00	2741.25
	29+25.00	15.00	2740.96	0.00	2741.18
	29+50.00	15.00	2740.86	0.00	2741.09
	29+75.00	15.00	2740.73	0.00	2740.96
	30+00.00	15.00	2740.56	0.00	2740.79
	30+25.00	15.00	2740.36	0.00	2740.59
	30+50.00	15.00	2740.13	0.00	2740.35
	30+75.00	15.00	2739.86	0.00	2740.09
	31+00.00	15.00	2739.56	0.00	2739.78
	31+25.00	15.00	2739.22	0.00	2739.45
	31+50.00	15.00	2738.85	0.00	2739.08
	31+75.00	15.00	2738.44	0.00	2738.67
	32+00.00	15.00	2738.02	0.00	2738.25
	32+25.00	15.00	2737.60	0.00	2737.83
	32+50.00	15.00	2737.18	0.00	2737.41
	32+75.00	15.00	2736.77	0.00	2737.00
11	33+00.13	15.00	2736.40	0.00	2736.62
12	33+48.19	-15.00	2736.30		
	33+50.00	-15.00	2736.29		
	33+75.00	-15.00	2736.19		
	34+00.00	-15.00	2735.95		

WB Detour B Edge		
Point ID	Station	Offset	Elevation
18	58+09.45	-15.00	2733.03
	58+25.00	-15.00	2733.14
	58+50.00	-15.00	2733.68
	58+75.00	-15.00	2734.20
	59+00.00	-15.00	2734.70
	59+25.00	-15.00	2735.17
	59+50.00	-15.00	2735.62
	59+75.00	-15.00	2736.04
	60+00.00	-15.00	2736.44
	60+25.00	-15.00	2736.82
	60+50.00	-15.00	2737.18
	60+75.00	-15.00	2737.51
	61+00.00	-15.00	2737.83
	61+25.00	-15.00	2738.12
	61+50.00	-15.00	2738.39
	61+75.00	-15.00	2738.63
	62+00.00	-15.00	2738.86
	62+25.00	-15.00	2739.06
	62+50.00	-15.00	2739.24
	62+75.00	-15.00	2739.36
	63+00.00	-15.00	2739.46
	63+25.00	-15.00	2739.54
	63+50.00	-15.00	2739.63
06	63+66.30	-15.00	2739.71
05	63+66.30	15.00	2739.56
09	65+98.80	15.00	2740.72
	66+00.00	15.00	2740.73
	66+25.00	15.00	2740.83
07	65+98.80	-15.00	2740.87
	66+00.00	-15.00	2740.88
08	66+13.32	-15.00	2740.93

WB Detour B Edge			
Point ID	Station	Offset	Elevation
	66+25.00	-15.00	2740.97
	66+50.00	-15.00	2741.05
	66+75.00	-15.00	2741.12
	67+00.00	-15.00	2741.16
	67+25.00	-15.00	2741.15
	67+50.00	-15.00	2741.11
	67+75.00	-15.00	2741.03
	68+00.00	-15.00	2740.91
	68+25.00	-15.00	2740.80
	68+50.00	-15.00	2740.65
	68+75.00	-15.00	2740.47
	69+00.00	-15.00	2740.25
	69+25.00	-15.00	2739.99
	69+50.00	-15.00	2739.70
	69+75.00	-15.00	2739.37
	70+00.00	-15.00	2739.00
	70+25.00	-15.00	2738.60
	70+50.00	-15.00	2738.16
	70+75.00	-15.00	2737.70
	71+00.00	-15.00	2737.24
	71+25.00	-15.00	2736.78
	71+50.00	-15.00	2736.41
19	71+52.83	-15.00	2736.36
20	72+23.29	15.00	2736.29
	72+25.00	15.00	2736.28
	72+50.00	15.00	2736.01
21	72+55.18	15.00	2735.98

EB I-10 Edge			
Point ID	Station	Offset	Elevation
	367+25.00	-11.00	2731.22
102	367+39.04	-11.00	2731.54
103	381+23.07	-11.00	2736.34
	381+25.00	-11.00	2736.33
	381+50.00	-11.00	2736.13
	381+75.00	-11.00	2735.91
	382+00.00	-11.00	2735.71
	382+25.00	-11.00	2735.51

WB I-10 Edge			
Point ID	Station	Offset	Elevation
	367+25.00	11.00	2732.35
	367+50.00	11.00	2732.92
111	367+59.49	11.00	2733.11
112	381+00.76	11.00	2736.32
	381+25.00	11.00	2736.11
	381+50.00	11.00	2735.87
	381+75.00	11.00	2735.67
	382+00.00	11.00	2735.55
	382+25.00	11.00	2735.37

	NAME	DATE
DESIGN	CEM	05-16
DRAWN	WKH	05-16
CHECKED	FLM	05-16

T·Y·LIN INTERNATIONAL
engineers | planners | scientists
60 E. Rio Salado Parkway, Suite 501
Tempe, Arizona 85281, Tel. 480-968-8814

ARIZONA DEPARTMENT OF TRANSPORTATION
INFRASTRUCTURE DELIVERY AND OPERATIONS DIVISION
ROADWAY DESIGN SERVICES

I-10 CRAYCROFT
DETOUR STAKING SHEET

Registered Professional Engineer (Civil) CERTIFICATE NO. 51336 CHRISTOPHER E. MILNER Date Signed 06/16/16 ARIZONA, U.S.A. Expires 9/30/2016

ROUTE	LOCATION
I-10	CRAYCROFT RD TI OP STR #594 & #595

DWG NO. C-03.02

TRACS NO. H 8774 01C | 010-E(219)T | ___ OF ___

Workspace: T:\TempeLegacy\CADD_Standard\station\projects\221867.00 Craycroft - Willmot.pcf Plot Driver: ...\Plotdrg\ADOT PDF_FULL.plt
SURVEY NO. FINISHED PLANS REVISIONS LOCATION DATE SURVEY NO. Pentable: STDPLOT.TBL REVISIONS LOCATION

F.H.W.A. REGION	STATE	PROJECT NO.	SHEET NO.	TOTAL SHEETS	RECORD DRAWING
9	ARIZ.	010-E(219)T	20	82	

010 PM 267

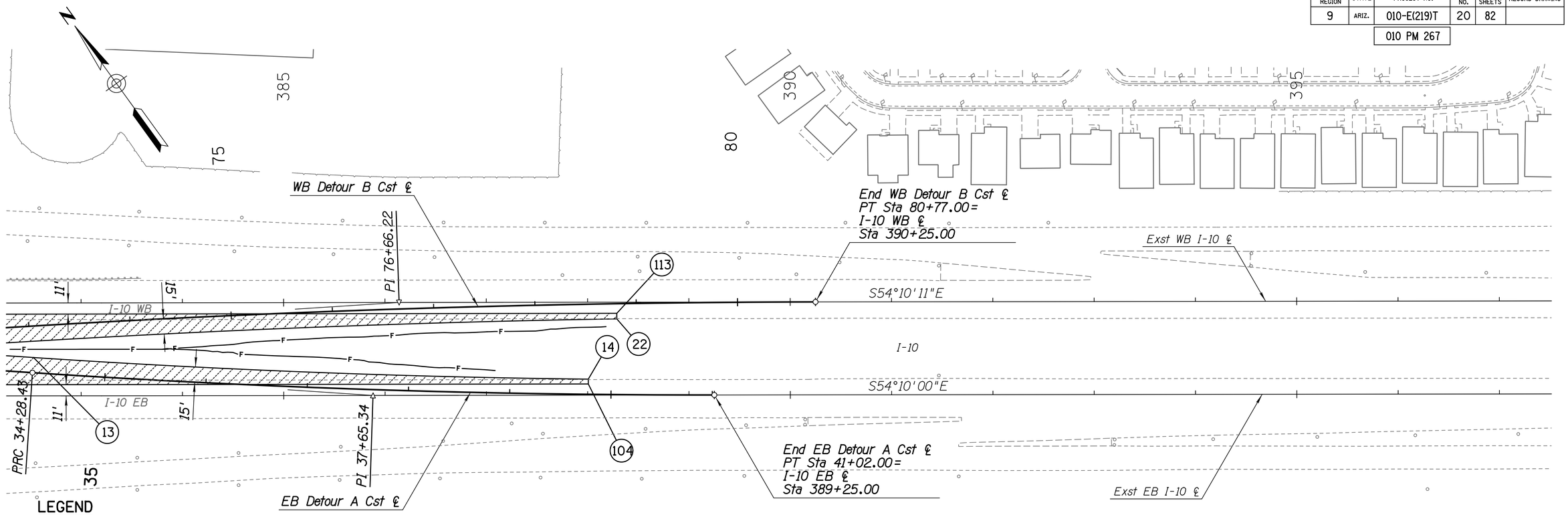

LEGEND

Denotes Paving Limits

EB Detour A Edge			
Point ID	Station	Offset	Elevation
	34+25.00	-15.00	2735.77
13	34+28.43	-15.00	2735.74
	34+50.00	-15.00	2735.59
	34+75.00	-15.00	2735.43
	35+00.00	-15.00	2735.24
	35+25.00	-15.00	2735.10
	35+50.00	-15.00	2734.97
	35+75.00	-15.00	2734.86
	36+00.00	-15.00	2734.79
	36+25.00	-15.00	2734.74
	36+50.00	-15.00	2734.71
	36+75.00	-15.00	2734.69
	37+00.00	-15.00	2734.68
	37+25.00	-15.00	2734.70
	37+50.00	-15.00	2734.75
	37+75.00	-15.00	2734.79
	38+00.00	-15.00	2734.82
	38+25.00	-15.00	2734.81
	38+50.00	-15.00	2734.87
	38+75.00	-15.00	2735.05
	39+00.00	-15.00	2735.14
	39+25.00	-15.00	2735.30
	39+50.00	-15.00	2735.46
	39+75.00	-15.00	2735.61
14	39+77.42	-15.00	2735.62

WB Detour B Edge			
Point ID	Station	Offset	Elevation
	72+75.00	15.00	2735.82
	73+00.00	15.00	2735.52
	73+25.00	15.00	2735.33
	73+50.00	15.00	2735.10
	73+75.00	15.00	2734.87
	74+00.00	15.00	2734.67
	74+25.00	15.00	2734.43
	74+50.00	15.00	2734.24
	74+75.00	15.00	2734.06
	75+00.00	15.00	2733.84
	75+25.00	15.00	2733.65
	75+50.00	15.00	2733.51
	75+75.00	15.00	2733.45
	76+00.00	15.00	2733.47
	76+25.00	15.00	2733.52
	76+50.00	15.00	2733.62
	76+75.00	15.00	2733.66
	77+00.00	15.00	2733.75
	77+25.00	15.00	2733.92
	77+50.00	15.00	2734.11
	77+75.00	15.00	2734.34
	78+00.00	15.00	2734.59
	78+25.00	15.00	2734.83
	78+50.00	15.00	2735.09
	78+75.00	15.00	2735.37
22	78+80.59	15.00	2735.43

EB I-10 Edge			
Point ID	Station	Offset	Elevation
	382+50.00	-11.00	2735.35
	382+75.00	-11.00	2735.20
	383+00.00	-11.00	2735.06
	383+25.00	-11.00	2734.90
	383+50.00	-11.00	2734.78
	383+75.00	-11.00	2734.67
	384+00.00	-11.00	2734.59
	384+25.00	-11.00	2734.54
	384+50.00	-11.00	2734.50
	384+75.00	-11.00	2734.49
	385+00.00	-11.00	2734.49
	385+25.00	-11.00	2734.50
	385+50.00	-11.00	2734.54
	385+75.00	-11.00	2734.60
	386+00.00	-11.00	2734.65
	386+25.00	-11.00	2734.69
	386+50.00	-11.00	2734.70
	386+75.00	-11.00	2734.77
	387+00.00	-11.00	2734.92
	387+25.00	-11.00	2735.06
	387+50.00	-11.00	2735.23
	387+75.00	-11.00	2735.40
104	388+00.61	-11.00	2735.55

WB I-10 Edge			
Point ID	Station	Offset	Elevation
	382+50.00	11.00	2735.10
	382+75.00	11.00	2734.92
	383+00.00	11.00	2734.71
	383+25.00	11.00	2734.51
	383+50.00	11.00	2734.33
	383+75.00	11.00	2734.12
	384+00.00	11.00	2733.94
	384+25.00	11.00	2733.78
	384+50.00	11.00	2733.58
	384+75.00	11.00	2733.41
	385+00.00	11.00	2733.29
	385+25.00	11.00	2733.24
	385+50.00	11.00	2733.29
	385+75.00	11.00	2733.35
	386+00.00	11.00	2733.46
	386+25.00	11.00	2733.51
	386+50.00	11.00	2733.62

WB I-10 Edge			
Point ID	Station	Offset	Elevation
	386+75.00	11.00	2733.81
	387+00.00	11.00	2734.00
	387+25.00	11.00	2734.25
	387+50.00	11.00	2734.51
	387+75.00	11.00	2734.75
	388+00.00	11.00	2735.02
	388+25.00	11.00	2735.30
113	388+28.82	11.00	2735.35

	NAME	DATE
DESIGN	CEM	05-16
DRAWN	WKH	05-16
CHECKED	FLM	05-16

T.Y. LIN INTERNATIONAL
engineers | planners | scientists
60 E. Rio Salado Parkway, Suite 501
Tempe, Arizona 85281, Tel. 480-968-8814

ARIZONA DEPARTMENT OF TRANSPORTATION
INFRASTRUCTURE DELIVERY AND OPERATIONS DIVISION
ROADWAY DESIGN SERVICES

I-10 CRAYCROFT
DETOUR STAKING SHEET

ROUTE: I-10
LOCATION: CRAYCROFT RD TI OP STR #594 & #595

Registered Professional Engineer (Civil) CERTIFICATE NO. 51336 CHRISTOPHER E. MILNER Date Signed 06/16/16 ARIZONA, U.S.A. Expires 9/30/2016

DWG NO. C-03.03

TRACS NO. H 8774 01C

010-E(219)T

___ OF ___

Workspace: T:\Tempe\Legacy\CADD_Standard\ustation\projects\221867.00 Craycroft - Wilmot.pcf Plot Driver: ...\Plotcfg\ADOT PDF FULL.plt Pentable: STDPLOT.TBL
SURVEY NO. FINISHED PLANS REVISIONS LOCATION DATE

F.H.W.A. REGION	STATE	PROJECT NO.	SHEET NO.	TOTAL SHEETS	RECORD DRAWING
9	ARIZ.	010-E(219)T	21	82	

010 PM 267

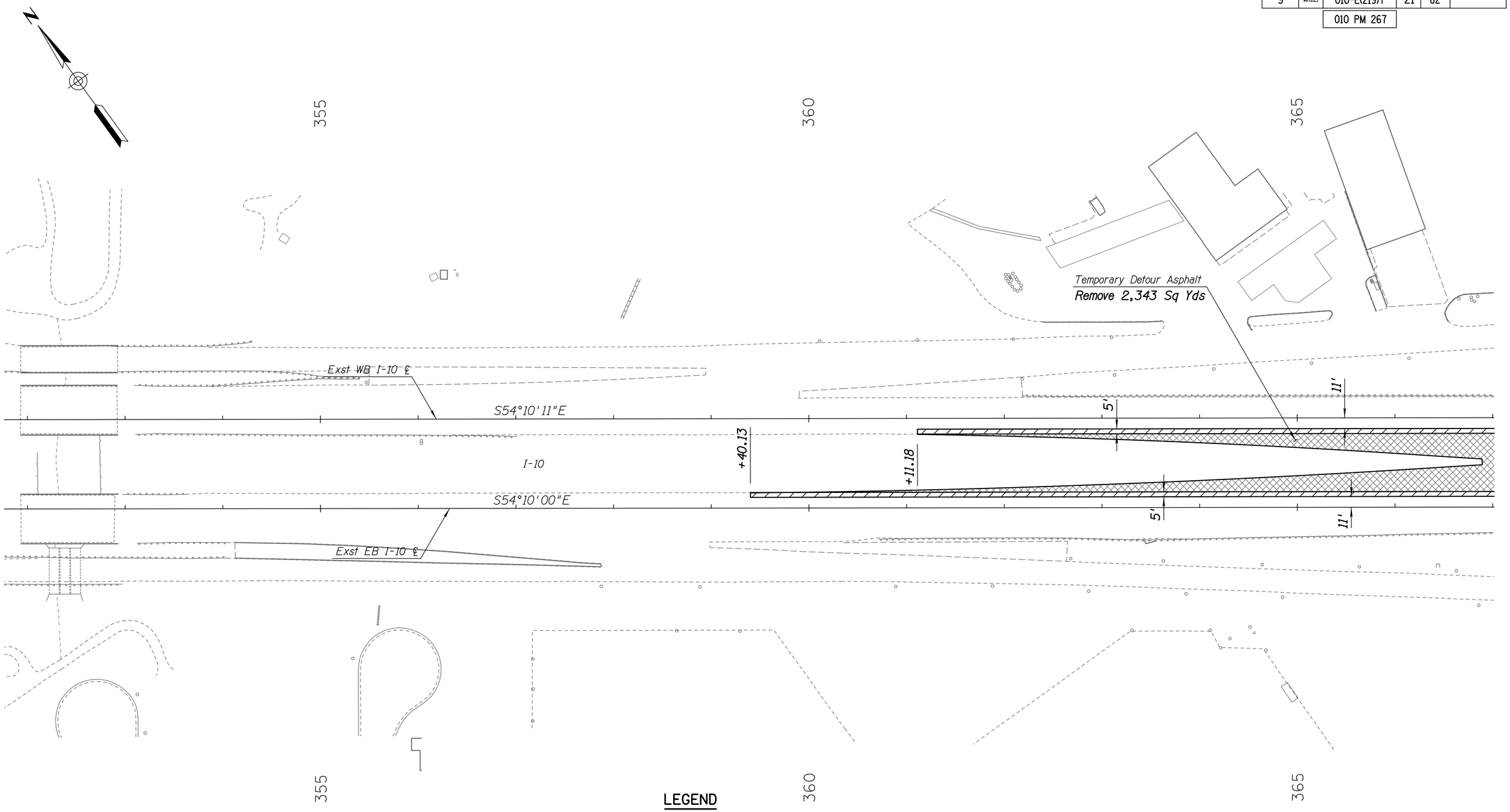

Note: The permanent pavement shoulders shall be treated with a rumble strip: see ADOT Std. Dwg M-22 (Sheet 1 of 2).

LEGEND

Denotes Final Paving Remove and Replace Limits Pavement Structural Sections No. 2 and No. 3.

Denotes Temporary Detour Asphalt Removal Limits

	NAME	DATE
DESIGN	CEM	05-16
DRAWN	WKH	05-16
CHECKED	FLM	05-16

T·Y·LIN INTERNATIONAL
engineers | planners | scientists
60 E. Rio Salado Parkway, Suite 501
Tempe, Arizona 85281, Tel. 480-968-8814

ARIZONA DEPARTMENT OF TRANSPORTATION
INFRASTRUCTURE DELIVERY AND OPERATIONS DIVISION
ROADWAY DESIGN SERVICES

I-10 CRAYCROFT
DETOUR REMOVAL AND
FINAL PAVING

Registered Professional Engineer (Civil) CERTIFICATE NO. 51336 CHRISTOPHER E. MILNER Date Signed 06/16/16 ARIZONA, U.S.A. Expires 9/30/2016

ROUTE	LOCATION
I-10	CRAYCROFT RD TI OP STR #594 & #595

DWG NO. C-04.01

TRACS NO. H 8774 01C | 010-E(219)T | ___ OF ___

Workspace: T:\Tempe\Legacy\CADD Standards\station\projects\221867.00 Craycroft - Wilmot.pcf | Plot Driver: ...\Plotdrg\ADOT PDF_FULL.plt | Pentable: STDPLOT.TBL
SURVEY NO. | FINISHED PLANS- | REVISIONS- | LOCATION- | DATE- | SURVEY NO. | REVISIONS- | LOCATION-

F.H.W.A. REGION	STATE	PROJECT NO.	SHEET NO.	TOTAL SHEETS	RECORD DRAWING
9	ARIZ.	010-E(219)T	22	82	
		010 PM 267			

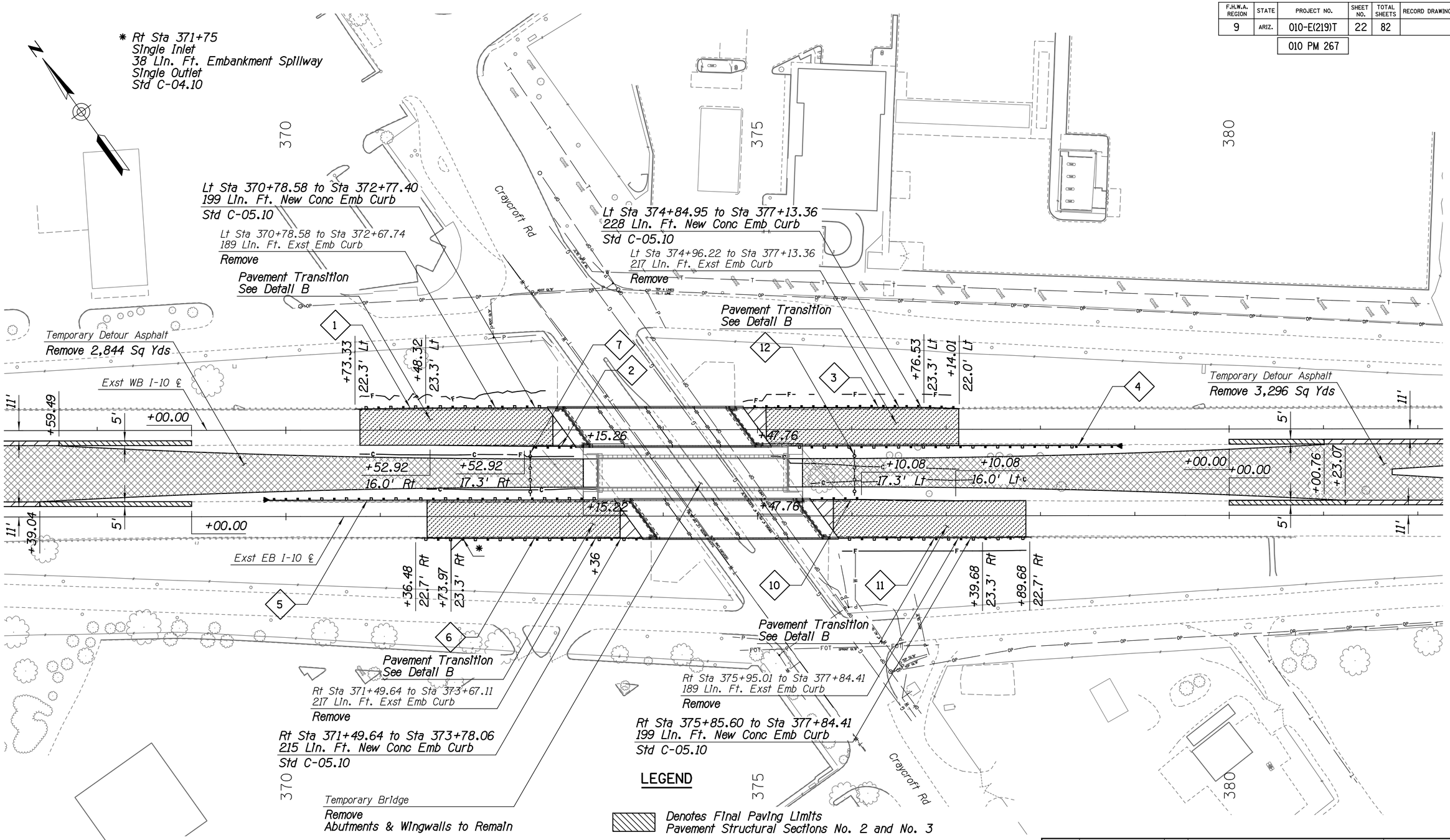

LEGEND

- Denotes Final Paving Limits
  Pavement Structural Sections No. 2 and No. 3
- Denotes Remove Approach Slab and Final Paving Replace Limits
  Pavement Structural Sections No. 2 and No. 3
- Denotes Temporary Detour Asphalt Removal Limits
- Denotes Final Paving Limits
  Pavement Structural Sections No. 3, No. 4 and No. 5.

NOTES:

1. The permanent pavement shoulders shall be treated with a rumble strip: see ADOT Std. Dwg M-22 (Sheet 1 of 2).

2. Within the limits of the thrie-beam transition, the height of the C-05-10 Embankment Curb shall be 2½" max.

	NAME	DATE
DESIGN	CEM	05-16
DRAWN	WKH	05-16
CHECKED	FLM	05-16

T·Y·LIN INTERNATIONAL
engineers | planners | scientists
60 E. Rio Salado Parkway, Suite 501
Tempe, Arizona 85281, Tel. 480-968-8814

ARIZONA DEPARTMENT OF TRANSPORTATION
INFRASTRUCTURE DELIVERY AND OPERATIONS DIVISION
ROADWAY DESIGN SERVICES

I-10 CRAYCROFT
DETOUR REMOVAL AND
FINAL PAVING

Registered Professional Engineer (Civil)
CERTIFICATE NO. 51336
CHRISTOPHER E. MILNER
Date Signed 06/16/16
ARIZONA, U.S.A.
Expires 9/30/2016

ROUTE	LOCATION
I-10	CRAYCROFT RD TI OP STR #594 & #595

DWG NO. C-04.02

TRACS NO. H 8774 01C | 010-E(219)T | ___ OF ___

Workspace: T:\Tempe\Legacy\CADD_Standard\station\projects\221867.00 Craycroft - Willmot.pcf
Plot Driver: ...\Plotcfg\ADOT PDF_FULL.pltt
Pentable: STDPLOT.TBL
SURVEY NO. | FINISHED PLANS- | REVISIONS- | LOCATION- | DATE-
SURVEY NO. | REVISIONS- | LOCATION-

CMilner 1:30:58 PM 6/16/2016 t:\tempe\projects\221867.00\600_cadd\05_official\delv files\Paving\H8774p02.dgn

F.H.W.A. REGION	STATE	PROJECT NO.	SHEET NO.	TOTAL SHEETS	RECORD DRAWING
9	ARIZ.	010-E(219)T	23	82	

010 PM 267

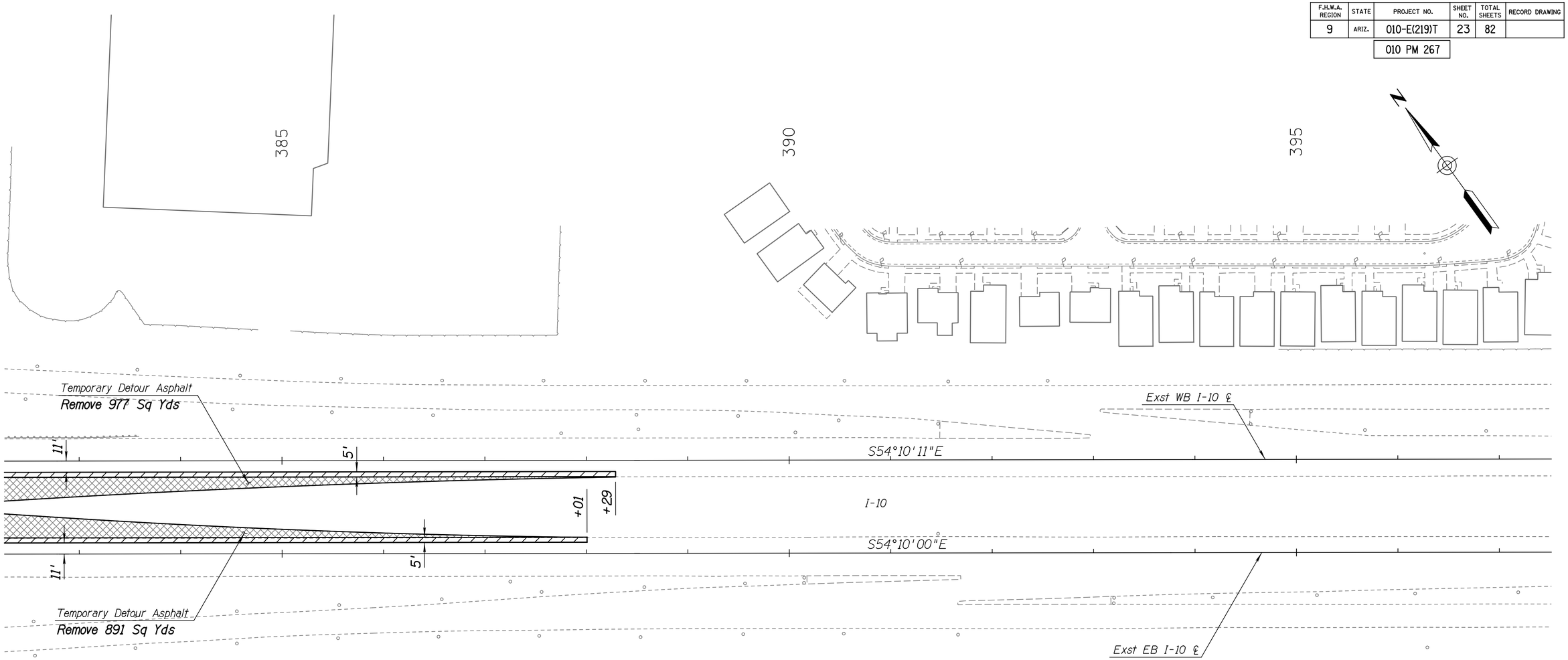

Note: The permanent pavement shoulders shall be treated with a rumble strip: see ADOT Std. Dwg M-22 (Sheet 1 of 2).

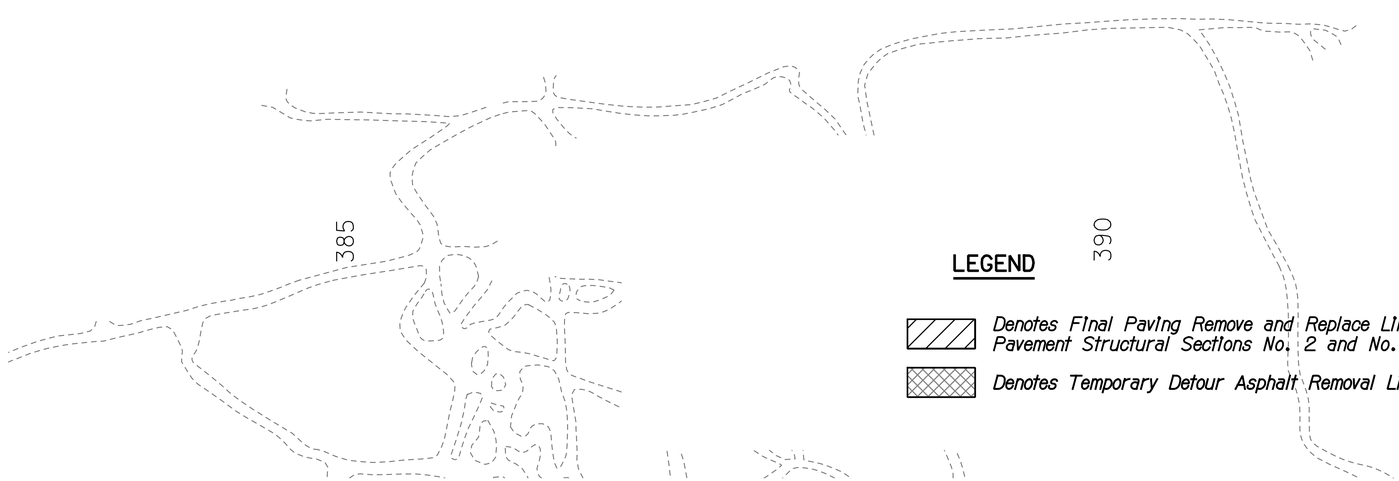

LEGEND

Denotes Final Paving Remove and Replace Limits
Pavement Structural Sections No. 2 and No. 3

Denotes Temporary Detour Asphalt Removal Limits

	NAME	DATE
DESIGN	CEM	05-16
DRAWN	WKH	05-16
CHECKED	FLM	05-16

T.Y. LIN INTERNATIONAL
engineers | planners | scientists
60 E. Rio Salado Parkway, Suite 501
Tempe, Arizona 85281, Tel. 480-968-8814

ARIZONA DEPARTMENT OF TRANSPORTATION
INFRASTRUCTURE DELIVERY AND OPERATIONS DIVISION
ROADWAY DESIGN SERVICES

I-10 CRAYCROFT
DETOUR REMOVAL AND
FINAL PAVING

Registered Professional Engineer (Civil)
CERTIFICATE NO. 51336
CHRISTOPHER E. MILNER
Date Signed 6/16/16
ARIZONA, U.S.A.
Expires 9/30/2016

ROUTE	LOCATION
I-10	CRAYCROFT RD TI OP STR #594 & #595

DWG NO. C-04.03

TRACS NO. H 8774 01C | 010-E(219)T | ___ OF ___

Workspace: T:\Tempe\Legacy\CADD_Standardusstation\projects\221867.00 Craycroft - Wilmot.pcf | Plot Driver: ...\Plotcfg\ADOT_PDF_FULL.plt | Pentable: STDPLOT.TBL
SURVEY NO. | FINISHED PLANS- | REVISIONS- | LOCATION- | DATE- | SURVEY NO. | REVISIONS- | LOCATION-

CMilner 1:31:00 PM 6/16/2016 t:\tempe\projects\221867.00\600_cadd\05_official\delv files\Paving\H8774p03.dgn

F.H.W.A. REGION	STATE	PROJECT NO.	SHEET NO.	TOTAL SHEETS	RECORD DRAWING
9	ARIZ.	010-E(219)T	24	82	

010 PM 267

ADOT TRAFFIC CONTROL NOTES:

1. The Maintenance of Traffic Tables and Traffic Control Plans represent a suggested method for traffic control during construction. The contractor may prepare another traffic control plan in accordance with the requirements of Section 701 of the Specifications, Maintenance and Protection of Traffic and Section 104.04 of the project special provisions. If contractor deviates from the Maintenance of Traffic, the contractor shall develop a traffic control plan in accordance with the specifications. No measurement or direct payment for the plan will be made. The cost being considered as included in the price of contract items. All traffic control plans are subject to the approval of the Engineer before beginning construction.

2. Adjustments to the details of these traffic control plans and requirements may be necessary due to construction activities, as directed and approved by the Engineer.

3. All existing signs in conflict with the construction signs shall be removed, relocated, or covered in place, as directed by the Engineer. The contractor shall store and reinstall items which have been removed or relocated in a manner approved by the Engineer. The cost shall be included in the price of contract items. Any sign damaged during the course of construction shall be replaced at the expense of the contractor and at no cost to the department.

4. All construction signs shall have black letters/legends on an orange background, except as otherwise noted.

5. The retro-reflective sheeting on all construction signs shall meet criteria established for Type IX or XI sheeting in AAHSTO M268, and in section 1007, of the Specification.

6. All advance warning signs on I-10 that are to remain for the duration of the project shall be mounted on embedded posts. For signs installed on embedded posts, sign mounting height is a minimum of 7 feet as measured from the bottom of the sign to the near edge of the pavement. All advance warning signs on Craycroft Road shall be mounted on rigid stands. All other short-term signs used for individual activities may be installed on portable sign stands (spring type) on I-10 or rigid type on Craycroft Road or the frontage roads. All signs on portable stands shall be mounted at least 1 foot above the pavement.

7. The nearest edge or corner of a sign shall be approximately 12 feet from the nearest edge of pavement or 6 feet behind guardrail or concrete barrier for all signs mounted on embedded posts.

8. Flags shall be mounted on top of all construction signs except the "END ROAD WORK THANK YOU" sign. Type "A" flashing warning lights shall be required on all night-time construction signs except the "END ROAD WORK THANK YOU" sign.

9. Type I and Type II barricades shall be used for channelizing devices, unless directed by the Engineer to use vertical panels.

10. Channelizing devices for tapers shall be at a maximum spacing of 40 feet on center. The channelizing devices on tangents shall be at a maximum spacing of 80 feet on center. Except as otherwise noted on plans.

11. A Type "C" steady-burning yellow light shall be mounted on every barricade on tapers and along tangent sections during night-time activities.

12. Temporary traffic control devices for daily work activities shall be placed during the one hour period immediately prior to the work shift and removed during the one hour period immediately following the work shift unless otherwise directed by the Engineer.

13. When no closure is necessary but where there is construction alongside a roadway, the contractor shall place 48 inch x 48 inch "ROAD WORK AHEAD" and "SHOULDER WORK AHEAD" signing as directed by the Engineer to alert the public to the construction activities.

14. When traffic control items are not in use, the contractor shall remove these items to a location at least 30 feet from the edge of the paved roadway. This includes all supports without sign panels. Any signs which are not in use but which cannot be moved at least 30 feet from the roadway shall be covered so the public cannot read the legends.

15. The contractor shall abide by the traffic control requirements contained in subsection 104.04 "Maintenance of Traffic" of the Special Provisions.

16. Immediately prior to the placement of all temporary and permanent markings, the contractor shall clean and dry the roadway surface to the satisfaction of the Engineer by sweeping and air-jet blowing, the cost being considered as included in the price of contract items.

17. Temporary striping shall be standard reflectorized traffic paint unless otherwise noted on plans.

18. The contractor shall place the changeable message boards two weeks prior to the start of construction to alert traffic of the upcoming road restrictions. The contractor shall position changeable message signs as directed by the Engineer. Cycle time and duration of the messages shall be such that the entire message can be read twice at operating speed from no further than 650 feet. The contractor shall locate the changeable message signs just off the paved roadway in compliance with the clear zone requirements or as directed by the Engineer. The Engineer will determine the messages on the changeable message signs to coincide with construction activities.

19. The contractor shall install a minimum of ten Type II barricades w/ Type "A" lights around the changeable message sign.

20. Construction signs shall not be displayed to traffic more than 24 hours prior to the actual start of construction. These signs may be installed sooner but they must be covered or turned away from traffic. The cost for covering or turning them shall be considered part of the sign installation cost. No further compensation will be made. These signs shall be removed within 24 hours after the completion of construction activities.

21. The contractor shall maintain traffic on paved surfaces at all times.

22. The contractor shall preserve all roadway signs, sign supports, object markers and milepost markers. The contractor shall replace any signs, sign supports, and markers damaged as a result of the construction at the contractor's expense.

23. Signing for double fines in work zones, when allowed by the Engineer, shall generally conform to Figure SA-12 of the 2010 ADOT Traffic Control Design Guidelines. Such signing shall only be in place during working periods when workers are present in accordance with the guidelines for signing for double fines in the work zones. The cost for covering or moving the signs before and after work periods is considered incidental to the contract.

24. All lane restrictions and roadway closures shall be coordinated with the City of Tucson and Pima County Department of Transportation.

25. Off-duty uniformed police officers and their vehicles shall be included as part of the contractor's traffic control when the Engineer decides they should be present including during the installation, relocation, and removal of temporary concrete barrier and/or channelizing devices.

26. Type III barricades shall be placed across each roadway to be closed. A 60 inch x 36 inch "ROAD CLOSED" or "RAMP CLOSED" sign, as appropriate, shall be attached to one of the Type III barricades closing the roadway. A Type "A" flashing warning light shall be mounted on each end of each Type III barricade.

REFERENCES / ABBREVIATIONS:
MUTCD - Part 6 of the Manual on Uniform Traffic Control Devices (MUTCD) 2009 Edition, and the ADOT supplement to the Manual on Uniform Traffic Control Devices (2009).

TCDG - ADOT Traffic Control Design Guidelines 2010 (LATEST EDITION).

	NAME	DATE
DESIGN	B. GOOD	6/16
DRAWN	B. GOOD	6/16
CHECKED	JW/EE	6/16

CivTech Inc.
10605 N. Hayden Rd. Suite 140 Scottsdale, AZ 85260
480.659.4250 p
480.659.6596 f
info@civtech.com

ARIZONA DEPARTMENT OF TRANSPORTATION
INFRASTRUCTURE DELIVERY AND OPERATIONS DIVISION
TRAFFIC DESIGN SERVICES

TRAFFIC CONTROL PLAN
GENERAL NOTES

Registered Professional Engineer (Civil) CERTIFICATE NO. 53396 ERICA RAE EGGEN 06/17/16 Date Signed ARIZONA, U.S.A.
Expires 6-30-18

ROUTE	LOCATION
I-10	CRAYCROFT RD TI OP STR #594 & #595

DWG. NO. T-1.01

TRACS NO. H8774 01C | 010-E(219)T | ___ OF ___

SURVEY NO. | FINISHED PLANS- | REVISIONS- | LOCATION- | DATE-

F.H.W.A. REGION	STATE	PROJECT NO.	SHEET NO.	TOTAL SHEETS	RECORD DRAWING
9	ARIZ.	010-E(219)T	25	82	

010 PM 267

MAINTENANCE OF TRAFFIC

ACTIVITY NO.	CONSTRUCTION ACTIVITY	TRAFFIC CONTROL	COMMENTS
1	Install project advance warning signs.	Provide "ROAD WORK AHEAD" signs on all approaches to the work zone and "END ROAD WORK THANK YOU" signs as shown in detail TC2 or as directed by the Engineer.	Traffic control shall remain for the duration of the work and shall be placed on embedded sign posts on I-10 or portable stands on Craycroft Road.
2	Construct temporary detour and temporary bridge in median.	Provide traffic control for median detour construction and temporary bridge construction per Figure 6H-5 and Figure 6H-33 of the MUTCD (2009 edition).	Provide changeable message signs during construction activities as directed by the Engineer. Channelizing devices shall be type I or II barricades on tapers and tangents. Flashing arrow panels shall be used for all lane closures or as directed by the Engineer. Provide civilian flaggers during work activities requiring temporary lane closures or as directed by the Engineer. Provide uniform police officers with vehicle during work activities requiring full roadway closures or as directed by the Engineer. Double fines signing shall be as shown on Figure SA-12 of the ADOT TCDG. During temporary closure of Craycroft Road (10pm Friday to 5am Monday), contractor shall coordinate with ADOT Regional Traffic for any modifications to the traffic signal operation.
3	Reconstruct EB I-10/Craycroft Rd bridge.	Provide traffic control for EB I-10/Craycroft Rd bridge reconstruction per detail TC3.	
4	Reconstruct WB I-10/Craycroft Rd bridge.	Provide traffic control for WB I-10/Craycroft Rd bridge reconstruction per detail TC4.	
5	Remove temporary detour and temporary bridge in median.	Provide traffic control for median detour removal and temporary bridge removal per Figure 6H-5 of the MUTCD (2009 edition).	
6	Install permanent pavement markings.	Provide traffic control per Figure 6H-33 of the MUTCD (2009 edition) or Figure SA-5(R) and SA-5(L) of the ADOT TCDG 2010.	
7	EB I-40 Slope Grading. (14 Calendar Days)	Provide "SHOULDER WORK AHEAD" signs on EB I-10 off ramp and EB I-10 Frontage Road as directed by the Engineer.	

Note:
The order of activities above does not constitute a sequence of construction.

The contractor shall perform the work in the most expeditious manner consistent with the project plans, ADOT project special provisions and approval of the Engineer.

REFERENCES / ABBREVIATIONS:
MUTCD - Part 6 of the Manual on Uniform Traffic Control Devices (MUTCD) 2009 Edition, and the ADOT supplement to the Manual on Uniform Traffic Control Devices (2009).

TCDG - ADOT Traffic Control Design Guidelines 2010 (LATEST EDITION).

	NAME	DATE
DESIGN	B. GOOD	6/16
DRAWN	B. GOOD	6/16
CHECKED	JW/EE	6/16

CivTech Inc.
10605 N. Hayden Rd. Suite 140 Scottsdale, AZ 85260
480.659.4250 p
480.659.0566 f
info@civtech.com

ARIZONA DEPARTMENT OF TRANSPORTATION
INFRASTRUCTURE DELIVERY AND OPERATIONS DIVISION
TRAFFIC DESIGN SERVICES

TRAFFIC CONTROL PLAN
MAINTENANCE OF TRAFFIC

Registered Professional Engineer (Civil) CERTIFICATE NO. 53398 ERICA RAE EGGEN Date Signed 06/17/16 ARIZONA, U.S.A.
Expires 6-30-18

ROUTE	LOCATION
I-10	CRAYCROFT RD TI OP STR #594 & #595

DWG. NO. T-1.02

TRACS NO. H8774 01C | 010-E(219)T | ____ OF ____

SURVEY NO. | FINISHED PLANS- | REVISIONS- | LOCATION- | DATE-

F.H.W.A. REGION	STATE	PROJECT NO.	SHEET NO.	TOTAL SHEETS	RECORD DRAWING
9	ARIZ.	010-E(219)T	26	82	
		010 PM 267			

APPROXIMATE TRAFFIC CONTROL QUANTITIES

BID ITEM NO.	ELEMENT OF WORK	UNIT	ACTIVITY 1	ACTIVITY 2	ACTIVITY 3	ACTIVITY 4	ACTIVITY 5	ACTIVITY 6	ACTIVITY 7	TOTAL
		DURATION (DAYS)	280 (Calendar Days)	70 (Calendar Days)	77 (Calendar Days)	77 (Calendar Days)	21 (Calendar Days)	7 (Calendar Days)	14 (Calendar Days)	-
7015010	Temporary Concrete Barrier (Installation & Removal)	L. Ft.	-	-	5,300	5,300	-	-	-	10,600
7015020	Temporary Impact Attenuators (Installation & Removal)	Each	-	-	2	2	-	-	-	4
7015042	Temporary Preformed Marking (Stripe)	L. Ft.	-	-	14,100	13,200	-	-	-	27,300
7015052	Obliterate Pavement Marking (Stripe)	L. Ft.	-	-	5,400	4,800	-	-	-	10,200
7015070	Obliterate Pavement Markers	Each	-	-	140	140	-	-	-	280
7016020	Temporary Concrete Barrier (In Use)	L. Ft.-Day	-	-	408,100	408,100	-	-	-	816,200
7016021	Temporary Impact Attenuators (In Use)	Each-Day	-	-	154	154	-	-	-	308
7016030	Barricade (Type II, Vertical Panel, Tubular Marker)	Each-Day	14,000	5,600	1,694	1,694	1,680	-	-	24,668
7016031	Barricade (Type III, High Level Flag Trees)	Each-Day	-	-	154	154	-	-	-	308
7016032	Portable Sign Stands (Rigid)	Each-Day	560	-	-	-	-	-	-	560
7016033	Portable Sign Stands (Spring Type)	Each-Day	1,120	280	231	231	84	14	28	1,988
7016035	Warning Lights (Type A)	Each-Day	3,920	280	1,078	1,078	84	70	28	6,538
7016037	Warning Lights (Type C)	Each-Day	14,000	5,600	1,155	1,155	1,680	-	-	23,590
7016039	Embedded Sign Post	Each-Day	5,600	-	1,232	1,232	-	-	-	8,064
7016050	Truck Mounted Attenuator	Each-Day	-	-	77	77	-	7	-	161
7016051	Temporary Sign (Less than 10 S.F.)	Each-Day	-	-	77	77	-	-	-	154
7016052	Temporary Sign (10 S.F. or more)	Each-Day	4,480	280	1,001	1,001	84	14	-	6,860
7016061	Flashing Arrow Panel	Each-Day	-	14	-	-	14	-	-	28
7016067	Changeable Message Board (Contractor Furnished)	Each-Day	1,204	-	-	-	-	-	-	1,204
7016075	Flagging Services (Civilian)	Hour	-	-	440	440	-	-	-	880
7016078	Flagging Services (Local Enforcement Officer)	Hour	-	240	440	440	120	-	-	1,240
7016080	Flagging Services (DPS)	Hour	-	240	-	-	120	-	-	360

	NAME	DATE
DESIGN	B. GOOD	6/16
DRAWN	B. GOOD	6/16
CHECKED	JW/EE	6/16

CivTech Inc.
10605 N. Hayden Rd. Suite 140 Scottsdale, AZ 85260
480.659.4250 p
480.659.0595 f
info@civtech.com

ARIZONA DEPARTMENT OF TRANSPORTATION
INFRASTRUCTURE DELIVERY AND OPERATIONS DIVISION
TRAFFIC DESIGN SERVICES

TRAFFIC CONTROL PLAN
QUANTITY SUMMARY SHEET

Registered Professional Engineer (Civil) CERTIFICATE NO. 53396 ERICA RAE EGGEN Date Signed 06/17/16 ARIZONA, U.S.A.
Expires 6-30-18

ROUTE	LOCATION	
I-10	CRAYCROFT RD TI OP STR #594 & #595	DWG. NO. T-1.03
TRACS NO. H8774 01C	010-E(219)T	___ OF ___

SURVEY NO. | FINISHED PLANS- | REVISIONS- | LOCATION- | DATE-

F.H.W.A. REGION	STATE	PROJECT NO.	SHEET NO.	TOTAL SHEETS	RECORD DRAWING
9	ARIZ.	010-E(219)T	27	82	
		010 PM 267			

SIGN LEGEND:

TYPE "A" LIGHT AND FLAGS (TYP)

1

W20-1aAZ
48"x48"

2

W20-1bAZ
48"x48"

3

W20-2AZ
48"x36"

4

W3-5aAZ
48"x48"

5

R2-1 (55)
48"x60"
BLACK ON WHITE

6

W1-4bL
48"x48"

7

R4-9
36"x48"
BLACK ON WHITE

8

R11-2
48"x30"

9

W4-1R
48"x48"

10

W4-3R
48"x48"

11

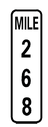

D10-3
12"x48"
WHITE ON GREEN

12

W1-4bR
48"x48"

W21-5C
48"x48"

DETAIL TC1

TRAFFIC CONTROL
SIGN LEGEND
NOT TO SCALE

	NAME	DATE
DESIGN	B. GOOD	6/16
DRAWN	B. GOOD	6/16
CHECKED	JW/EE	6/16

CivTech Inc.
10605 N. Hayden Rd.
Suite 140
Scottsdale, AZ 85260
480.659.4250 p
480.659.0566 f
info@civtech.com

ARIZONA DEPARTMENT OF TRANSPORTATION
INFRASTRUCTURE DELIVERY AND OPERATIONS DIVISION
TRAFFIC DESIGN SERVICES

TRAFFIC CONTROL PLAN
SIGN LEGEND

Registered Professional Engineer (Civil)
CERTIFICATE NO. 53398
ERICA RAE EGGEN
06/17/16
Date Signed
ARIZONA, U.S.A.
Expires 6-30-18

ROUTE	LOCATION
I-10	CRAYCROFT RD TI OP STR #594 & #595

DWG. NO. T-1.04

TRACS NO. H8774 01C | 010-E(219)T | ____ OF ____

SURVEY NO. | FINISHED PLANS- | REVISIONS- | LOCATION- | DATE-

SURVEY NO. | FINISHED PLANS- | REVISIONS- | LOCATION- | DATE-

F.H.W.A. REGION	STATE	PROJECT NO.	SHEET NO.	TOTAL SHEETS	RECORD DRAWING
9	ARIZ.	010-E(219)T	28	82	

010 PM 267

NOTES:

1. The contractor shall coordinate changeable message sign message with the Engineer.
2. The advance signing shown is for typical conditions. Actual work location and cross street geometry may vary. Adjustments to advance signing may be necessary as directed by the Engineer.
3. Install changeable message sign on each approach to the work zone as directed by the Engineer.

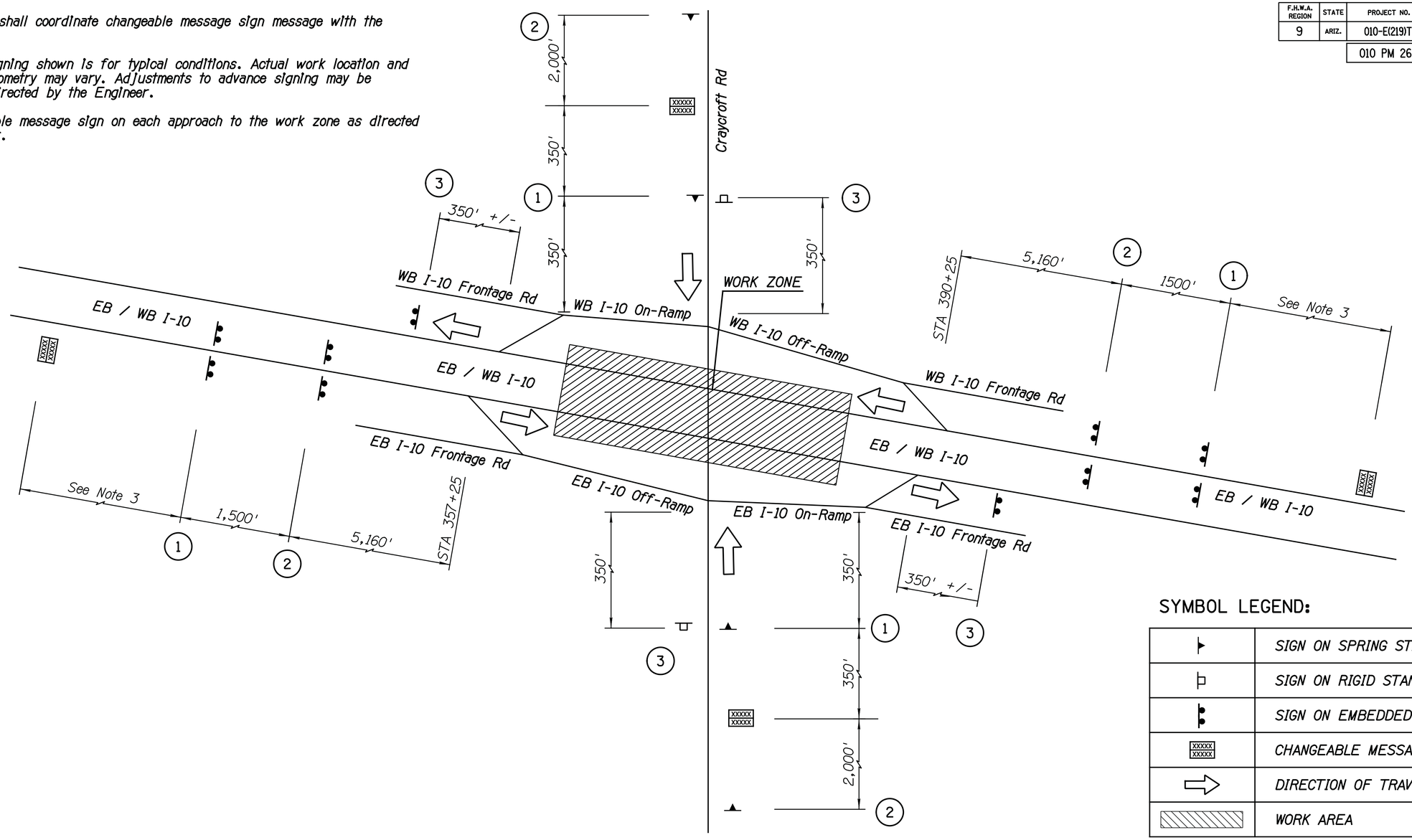

ADVANCE WARNING SIGNS

The above signs (except changeable message sign) shall be in place for the duration of the project. They are not required during the seeding establishment period.

SYMBOL LEGEND:

	SIGN ON SPRING STAND
	SIGN ON RIGID STAND
	SIGN ON EMBEDDED POSTS
XXXXX XXXXX	CHANGEABLE MESSAGE SIGN
	DIRECTION OF TRAVEL
	WORK AREA

SIGN LEGEND:

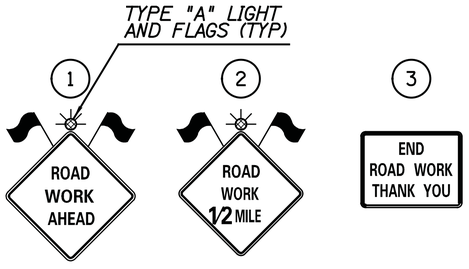

W20-1aAZ 48"x48" | W20-1bAZ 48"x48" | W20-2AZ 48"x36"

DETAIL TC2

TYPICAL CRAYCROFT RD AND I-10
ADVANCE WARNING SIGNS
NOT TO SCALE

	NAME	DATE
DESIGN	B. GOOD	6/16
DRAWN	B. GOOD	6/16
CHECKED	JW/EE	6/16

CivTech Inc.
10605 N. Hayden Rd. Suite 140 Scottsdale, AZ 85260
480.659.4250 p
480.659.0595 f
info@civtech.com

ARIZONA DEPARTMENT OF TRANSPORTATION
INFRASTRUCTURE DELIVERY AND OPERATIONS DIVISION
TRAFFIC DESIGN SERVICES

TRAFFIC CONTROL PLAN
ADVANCE WARNING SIGNS

Registered Professional Engineer (Civil) CERTIFICATE NO. 53398 ERICA RAE EGGEN 06/17/16 Date Signed ARIZONA, U.S.A.
Expires 6-30-18

ROUTE	LOCATION
I-10	CRAYCROFT RD TI OP STR #594 & #595

DWG. NO. T-1.05

TRACS NO. H8774 01C | 010-E(219)T | ___ OF ___

6/17/2016 Z:\Civtech\Projects\15-1600 TY Lin - I-10 Bridges, ADOT (2015-001)\Dwg\t8774t05.dgn

SURVEY NO. | FINISHED PLANS- | REVISIONS- | LOCATION- | DATE-

F.H.W.A. REGION	STATE	PROJECT NO.	SHEET NO.	TOTAL SHEETS	RECORD DRAWING
9	ARIZ.	010-E(219)T	29	82	

010 PM 267

NOTES:

1. All Type II barricades on tapers shall be 40' spacing (TYP).
2. All Type II barricades on tangents shall be 80' spacing (TYP).
3. All existing striping shall remain unless noted otherwise.

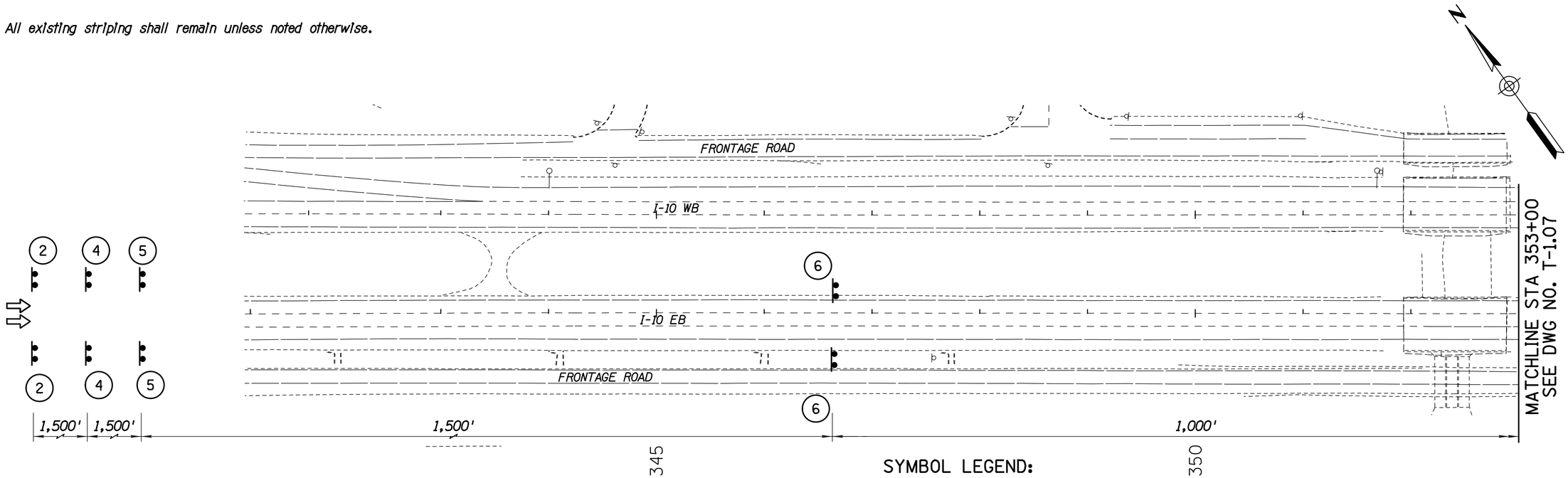

SYMBOL LEGEND:

	Sign on Spring Stand
	Sign on Rigid Stand
	Sign on Embedded Posts
	Type II Barricades
XXXXX XXXXX	Changeable Message Sign
	Sand Barrel Crash Cushion
	Direction of Travel
	Work Area

SIGN LEGEND:

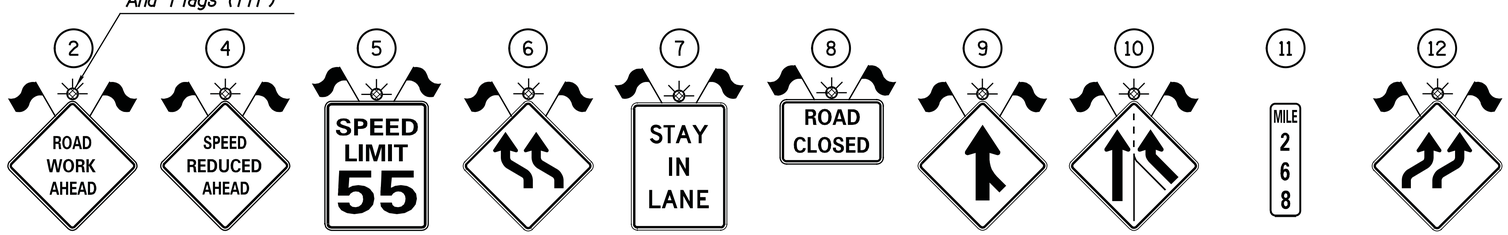

W20-1aAZ 48"x48"	W3-5aAZ 48"x48"	R2-1 (55) 48"x60" BLACK ON WHITE	W1-4bL 48"x48"	R4-9 36"x48" BLACK ON WHITE	R11-2 48"x30"	W4-1R 48"x48"	W4-3R 48"x48"	D10-3 12"x48" WHITE ON GREEN	W1-4bR 48"x48"

DETAIL TC3

EB I-10 MAINLINE DETOUR
SHEET 1 OF 4

	NAME	DATE
DESIGN	B. GOOD	6/16
DRAWN	B. GOOD	6/16
CHECKED	JW/EE	6/16

CivTech Inc.
10605 N. Hayden Rd. Suite 140 Scottsdale, AZ 85260
480.659.4250 p
480.659.0566 f
info@civtech.com

ARIZONA DEPARTMENT OF TRANSPORTATION
INFRASTRUCTURE DELIVERY AND OPERATIONS DIVISION
TRAFFIC DESIGN SERVICES

TRAFFIC CONTROL PLAN
I-10 EB DETOUR
STA 342+00 TO 353+00

ROUTE: I-10
LOCATION: CRAYCROFT RD TI OP STR #594 & #595

Registered Professional Engineer (Civil) CERTIFICATE NO. 53398 ERICA RAE EGGEN 06/17/16 Date Signed ARIZONA, U.S.A.
Expires 6-30-18

DWG. NO. T-1.06

TRACS NO. H8774 01C | 010-E(219)T | ____ OF ____

SURVEY NO. | FINISHED PLANS- | REVISIONS- | LOCATION- | DATE-

F.H.W.A. REGION	STATE	PROJECT NO.	SHEET NO.	TOTAL SHEETS	RECORD DRAWING
9	ARIZ.	010-E(219)T	30	82	

010 PM 267

NOTES:

1. All Type II barricades on tapers shall be 40' spacing (TYP).
2. All Type II barricades on tangents shall be 80' spacing (TYP).
3. All existing striping shall remain unless noted otherwise.

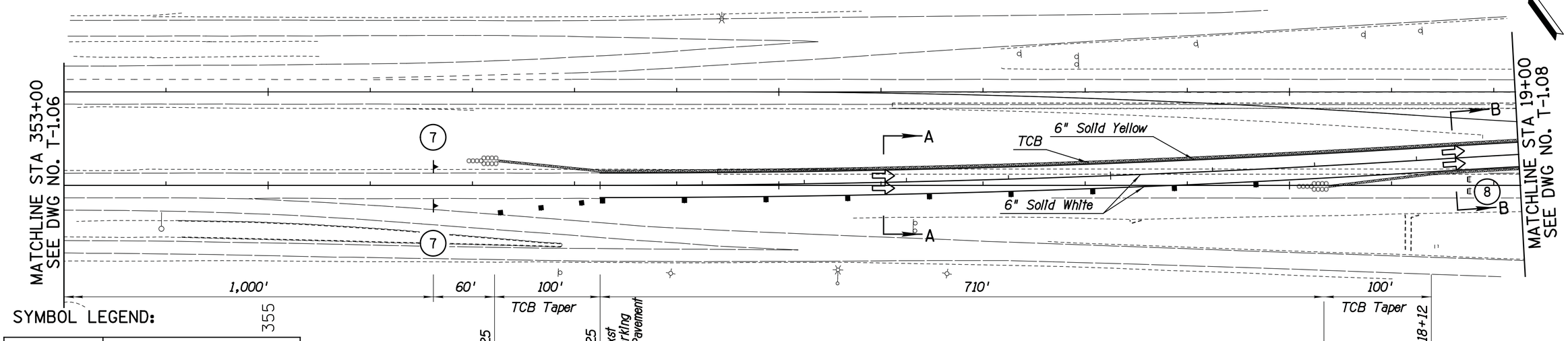

SYMBOL LEGEND:

	Sign on Spring Stand
	Sign on Rigid Stand
	Sign on Embedded Posts
	Type II Barricades
XXXXX XXXXX	Changeable Message Sign
	Sand Barrel Crash Cushion
	Direction of Travel
	Work Area

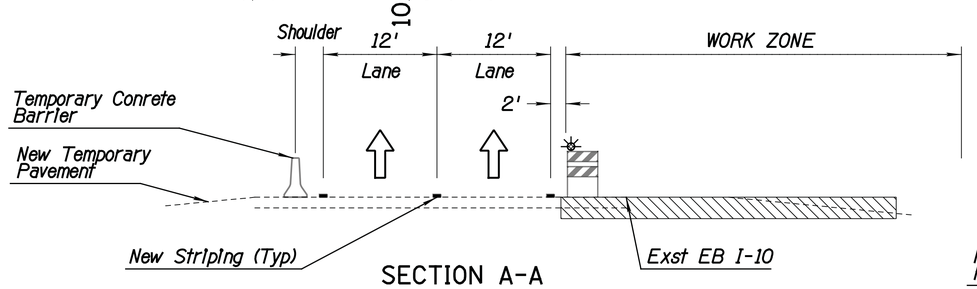

SECTION A-A

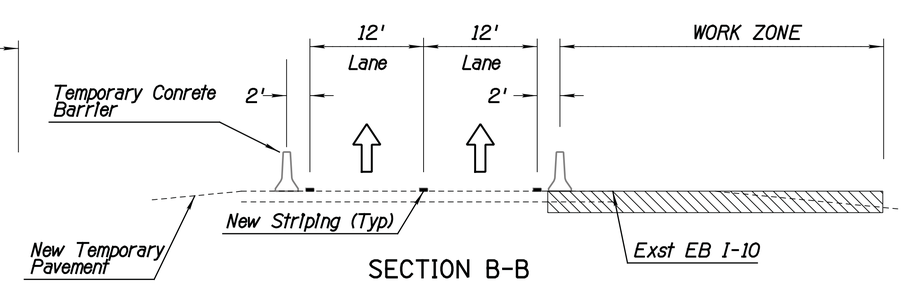

SECTION B-B

SIGN LEGEND:

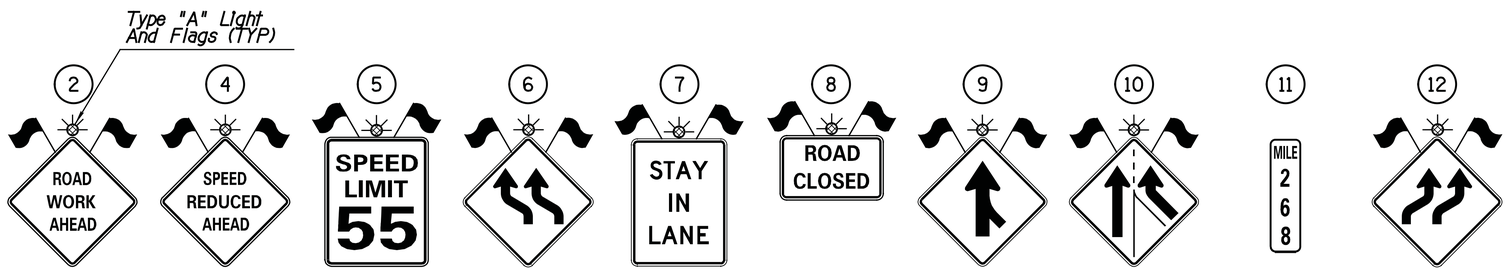

2	4	5	6	7	8	9	10	11	12
W20-1aAZ 48"x48"	W3-5aAZ 48"x48"	R2-1 (55) 48"x60" BLACK ON WHITE	W1-4bL 48"x48"	R4-9 36"x48" BLACK ON WHITE	R11-2 48"x30"	W4-1R 48"x48"	W4-3R 48"x48"	D10-3 12"x48" WHITE ON GREEN	W1-4bR 48"x48"

DETAIL TC3

EB I-10 MAINLINE DETOUR
SHEET 2 OF 4

	NAME	DATE
DESIGN	B. GOOD	6/16
DRAWN	B. GOOD	6/16
CHECKED	JW/EE	6/16

CivTech Inc.
19600 N. Hayden Rd. Suite 140 Scottsdale, AZ 85255
480.656.4200 p 480.656.0566 f info@civtech.com

ARIZONA DEPARTMENT OF TRANSPORTATION
INFRASTRUCTURE DELIVERY AND OPERATIONS DIVISION
TRAFFIC DESIGN SERVICES

TRAFFIC CONTROL PLAN
I-10 EB DETOUR
STA 353+00 TO 19+00

Registered Professional Engineer (Civil) CERTIFICATE NO. 53398 ERICA RAE EGGEN 06/17/16 Date Signed ARIZONA, U.S.A.
Expires 6-30-18

ROUTE	LOCATION
I-10	CRAYCROFT RD TI OP STR #594 & #595

DWG. NO. T-1.07

TRACS NO. H8774 01C | 010-E(219)T | ____ OF ____

SURVEY NO. | FINISHED PLANS- | REVISIONS- | LOCATION- | DATE-

6/17/2016 Z:\Civtech\Projects\15-1600 TY Lin - I-10 Bridges, ADOT (2015-001)\Dwg\t8774t12.dgn

F.H.W.A. REGION	STATE	PROJECT NO.	SHEET NO.	TOTAL SHEETS	RECORD DRAWING
9	ARIZ.	010-E(219)T	31	82	

010 PM 267

NOTES:

1. All Type II barricades on tapers shall be 40' spacing (TYP).
2. All Type II barricades on tangents shall be 80' spacing (TYP).
3. All existing striping shall remain unless noted otherwise.

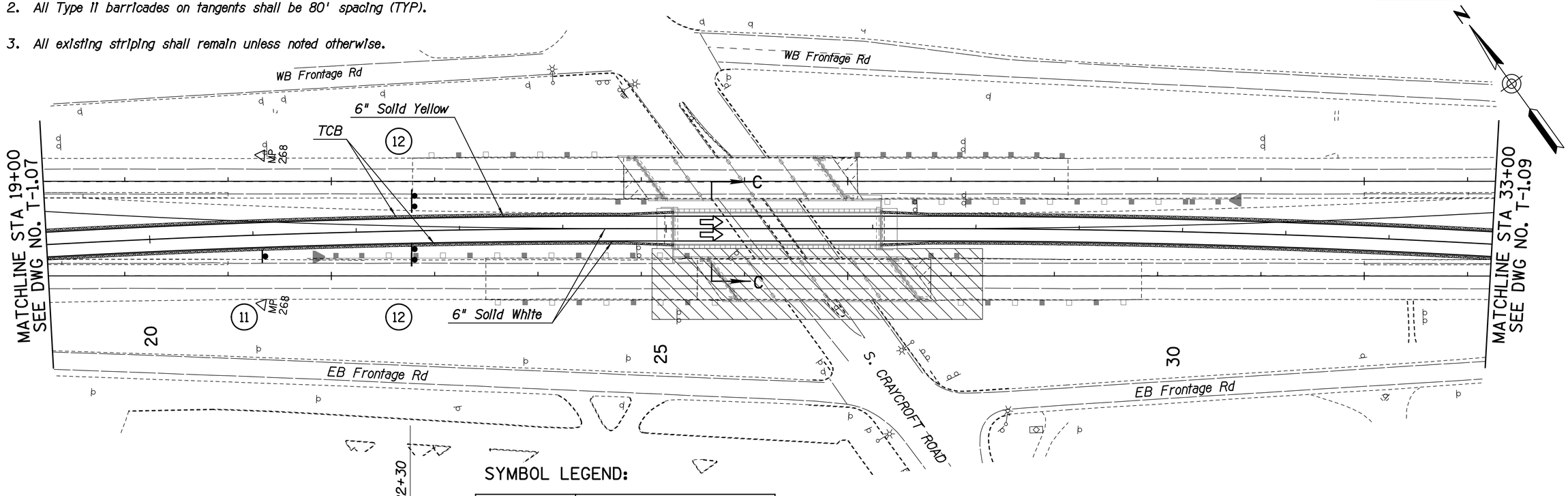

SYMBOL LEGEND:

	Sign on Spring Stand
	Sign on Rigid Stand
	Sign on Embedded Posts
	Type II Barricades
XXXXX XXXXX	Changeable Message Sign
	Sand Barrel Crash Cushion
	Direction of Travel
	Work Area

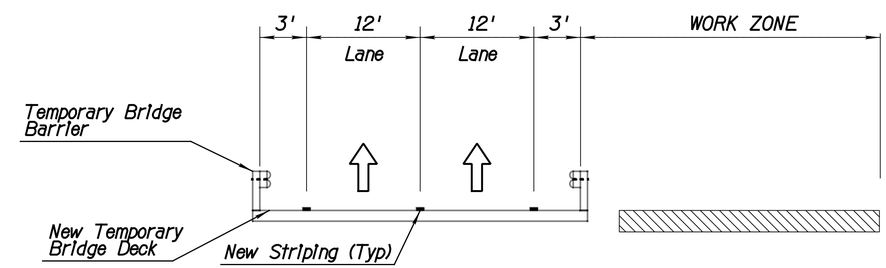

SECTION C-C

Note:
Temporary bridge barrier shown for reference only (It is included in the cost of the temporary bridge). See structure sheets for details.

SIGN LEGEND:

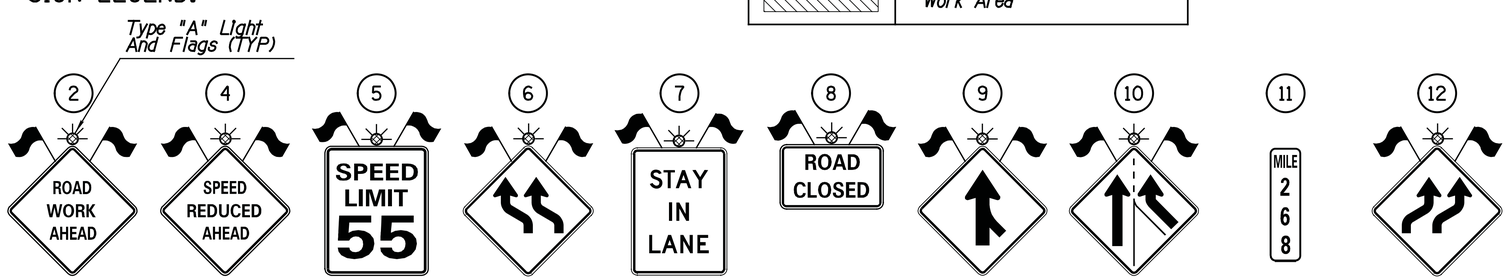

DETAIL TC3

EB I-10 MAINLINE DETOUR
SHEET 3 OF 4

	NAME	DATE
DESIGN	B. GOOD	6/16
DRAWN	B. GOOD	6/16
CHECKED	JW/EE	6/16

CivTech Inc.
10605 N. Hayden Rd. Suite 140 Scottsdale, AZ 85260
480.659.4250 p
480.659.6566 f
info@civtech.com

ARIZONA DEPARTMENT OF TRANSPORTATION
INFRASTRUCTURE DELIVERY AND OPERATIONS DIVISION
TRAFFIC DESIGN SERVICES

TRAFFIC CONTROL PLAN
I-10 EB DETOUR
STA 19+00 TO 33+00

Registered Professional Engineer (Civil) CERTIFICATE NO. 53398 ERICA RAE EGGEN Date Signed 06/17/16 ARIZONA, U.S.A.
Expires 6-30-18

ROUTE	LOCATION
I-10	CRAYCROFT RD TI OP STR #594 & #595

DWG. NO. T-1.08

TRACS NO. H8774 01C | 010-E(219)T | ____ OF ____

SURVEY NO. | FINISHED PLANS- | REVISIONS- | LOCATION- | DATE-

6/17/2016 Z:\Civtech\Projects\15-1600 TY Lin - I-10 Bridges, ADOT (2015-001)\Dwg\t8774t13.dgn

F.H.W.A. REGION	STATE	PROJECT NO.	SHEET NO.	TOTAL SHEETS	RECORD DRAWING
9	ARIZ.	010-E(219)T	32	82	
		010 PM 267			

NOTES:

1. All Type II barricades on tapers shall be 40' spacing (TYP).
2. All Type II barricades on tangents shall be 80' spacing (TYP).
3. All existing striping shall remain unless noted otherwise.

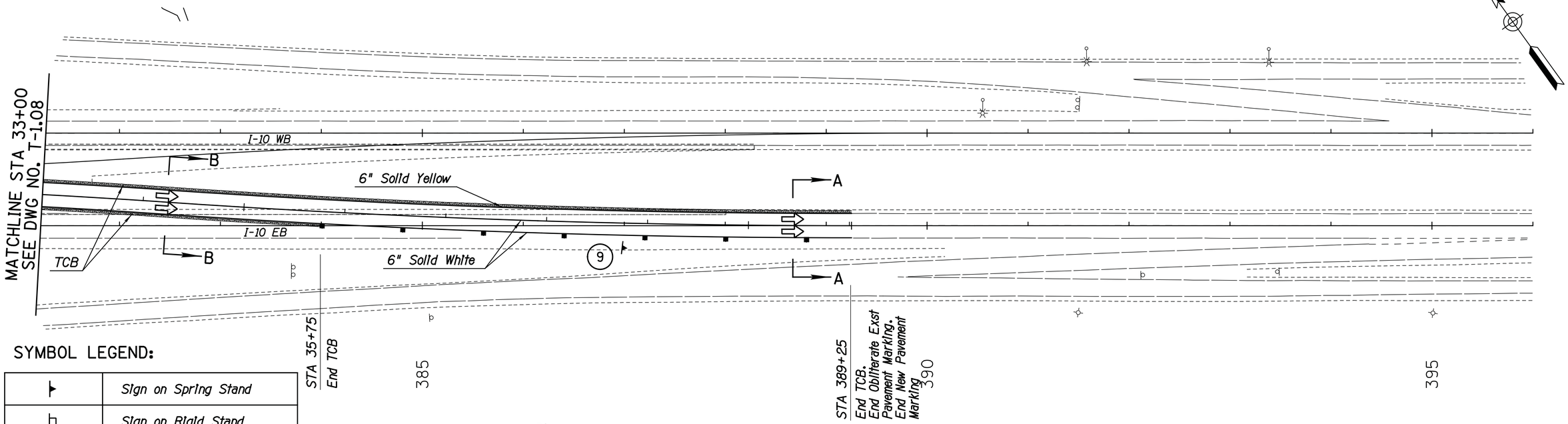

SYMBOL LEGEND:

	Sign on Spring Stand
	Sign on Rigid Stand
	Sign on Embedded Posts
	Type II Barricades
XXXXX XXXXX	Changeable Message Sign
	Sand Barrel Crash Cushion
	Direction of Travel
	Work Area

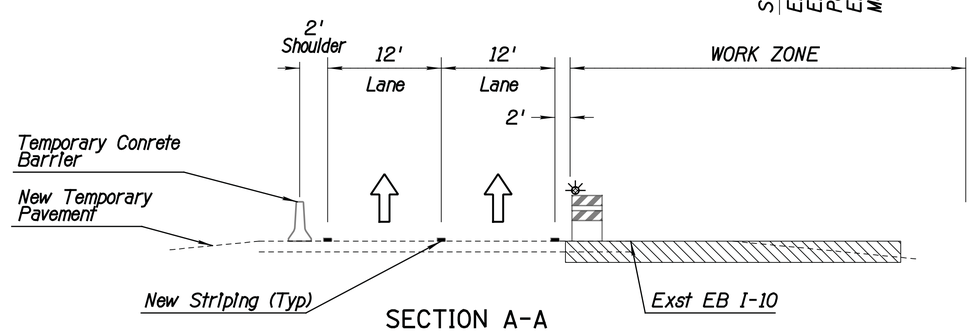

SECTION A-A

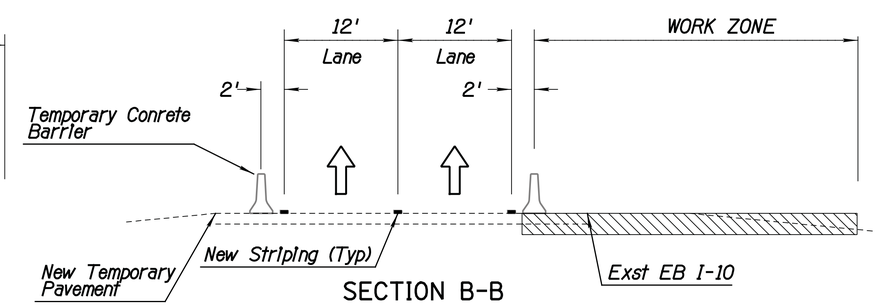

SECTION B-B

SIGN LEGEND:

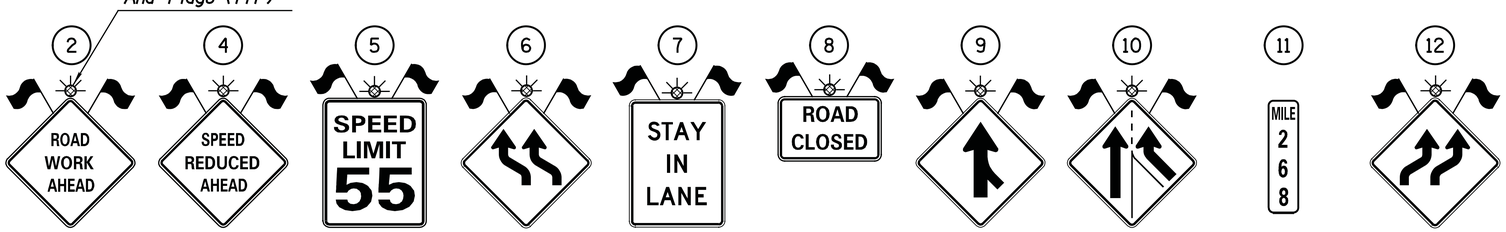

W20-1aAZ	W3-5aAZ	R2-1 (55)	W1-4bL	R4-9	R11-2	W4-1R	W4-3R	D10-3	W1-4bR
48"x48"	48"x48"	48"x60" BLACK ON WHITE	48"x48"	36"x48" BLACK ON WHITE	48"x30"	48"x48"	48"x48"	12"x48" WHITE ON GREEN	48"x48"

DETAIL TC3

EB I-10 MAINLINE DETOUR
SHEET 4 OF 4

	NAME	DATE
DESIGN	B. GOOD	6/16
DRAWN	B. GOOD	6/16
CHECKED	JW/EE	6/16

CivTech Inc.
10605 N. Hayden Rd. Suite 140 Scottsdale, AZ 85260
480.659.4250 p
480.656.5566 f
info@civtech.com

ARIZONA DEPARTMENT OF TRANSPORTATION
INFRASTRUCTURE DELIVERY AND OPERATIONS DIVISION
TRAFFIC DESIGN SERVICES

TRAFFIC CONTROL PLAN
I-10 EB DETOUR
STA 33+00 TO 396+00

Registered Professional Engineer (Civil) CERTIFICATE NO. 53396 ERICA RAE EGGEN Date Signed 06/17/16 ARIZONA, U.S.A.
Expires 6-30-18

ROUTE	LOCATION
I-10	CRAYCROFT RD TI OP STR #594 & #595

DWG. NO. T-1.09

TRACS NO. H8774 01C | 010-E(219)T | ___ OF ___

SURVEY NO. | FINISHED PLANS- | REVISIONS- | LOCATION- | DATE-

6/17/2016 Z:\Civtech\Projects\15-1600 TY Lin - I-10 Bridges, ADOT (2015-001)\Dwg\t8774t14.dgn

F.H.W.A. REGION	STATE	PROJECT NO.	SHEET NO.	TOTAL SHEETS	RECORD DRAWING
9	ARIZ.	010-E(219)T	33	82	

010 PM 267

NOTES:

1. All Type II barricades on tapers shall be 40' spacing (TYP).
2. All Type II barricades on tangents shall be 80' spacing (TYP).
3. All existing striping shall remain unless noted otherwise.

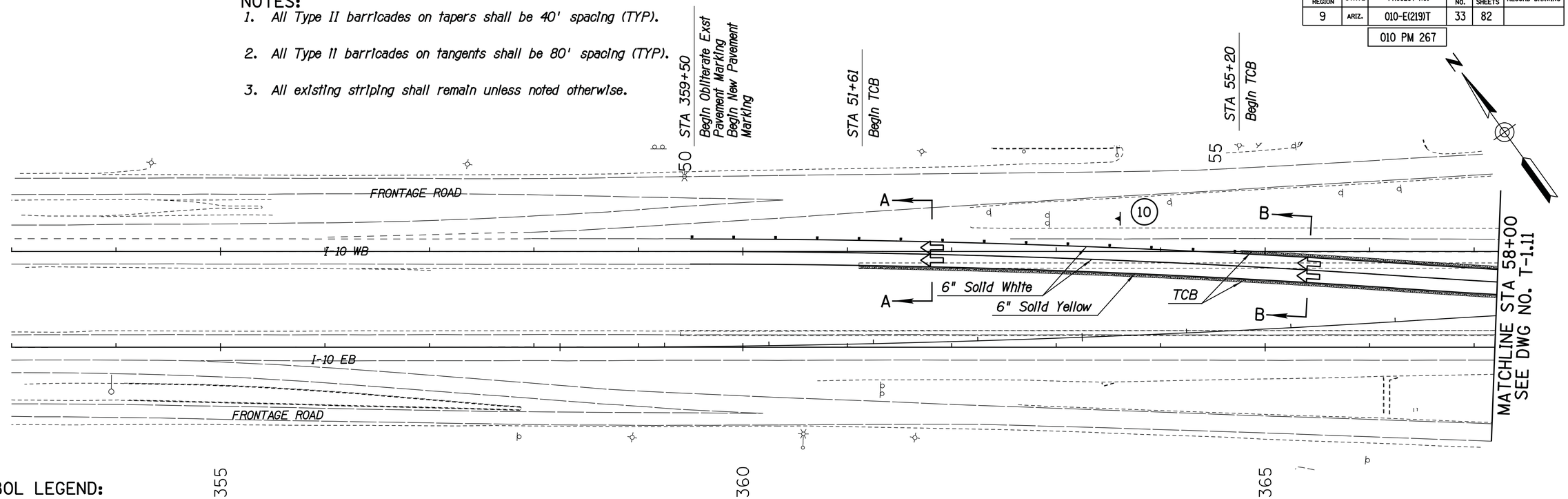

SYMBOL LEGEND:

	Sign on Spring Stand
	Sign on Rigid Stand
	Sign on Embedded Posts
	Type II Barricades
XXXXX XXXXX	Changeable Message Sign
	Sand Barrel Crash Cushion
	Direction of Travel
	Work Area

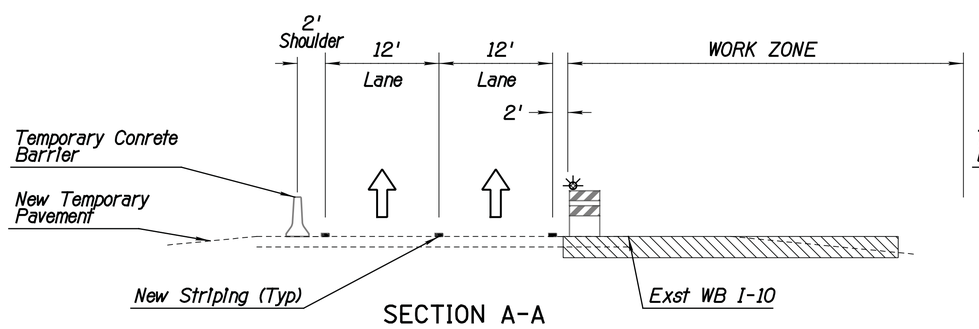

SECTION A-A

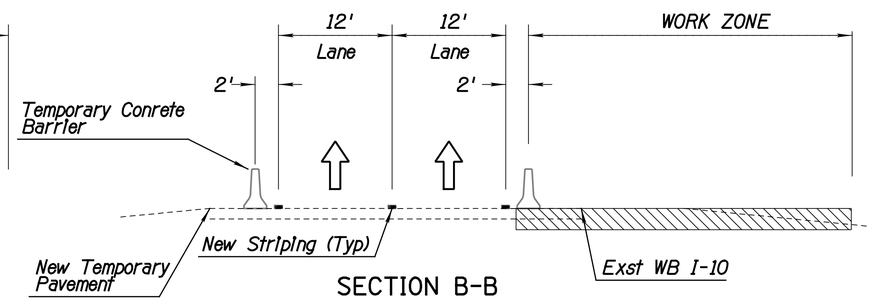

SECTION B-B

SIGN LEGEND:

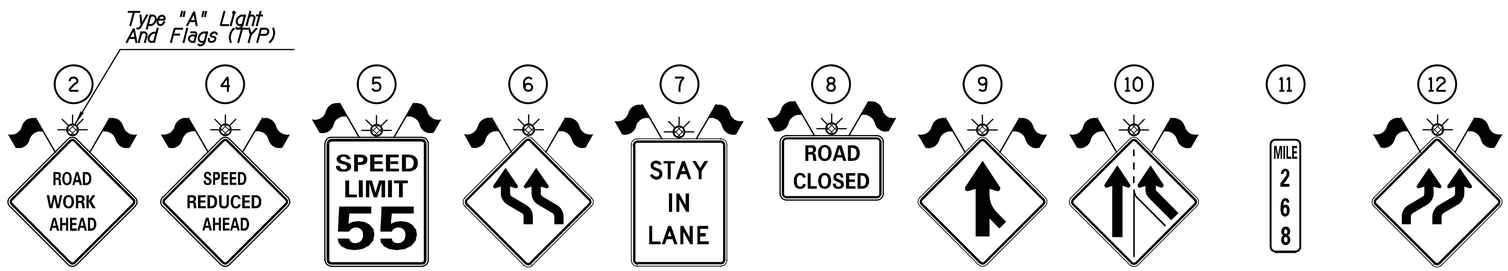

2	4	5	6	7	8	9	10	11	12
W20-1aAZ 48"x48"	W3-5aAZ 48"x48"	R2-1 (55) 48"x60" BLACK ON WHITE	W1-4bL 48"x48"	R4-9 36"x48" BLACK ON WHITE	R11-2 48"x30"	W4-1R 48"x48"	W4-3R 48"x48"	D10-3 12"x48" WHITE ON GREEN	W1-4bR 48"x48"

DETAIL TC4

WB I-10 MAINLINE DETOUR
SHEET 1 OF 4

	NAME	DATE
DESIGN	B. GOOD	6/16
DRAWN	B. GOOD	6/16
CHECKED	JW/EE	6/16

CivTech Inc.
19600 N. Hayden Rd. Suite 140 Scottsdale, AZ 85255
480.656.4200 p 480.656.0566 f info@civtech.com

ARIZONA DEPARTMENT OF TRANSPORTATION
INFRASTRUCTURE DELIVERY AND OPERATIONS DIVISION
TRAFFIC DESIGN SERVICES

TRAFFIC CONTROL PLAN
I-10 WB DETOUR
STA 353+00 TO 58+00

Registered Professional Engineer (Civil) CERTIFICATE NO. 53398 ERICA RAE EGGEN Date Signed 06/17/16 ARIZONA, U.S.A. Expires 6-30-18

ROUTE	LOCATION	
I-10	CRAYCROFT RD TI OP STR #594 & #595	
TRACS NO. H8774 01C	010-E(219)T	DWG. NO. T-1.10
		____ OF ____

6/17/2016 Z:\Civtech\Projects\15-1600 TY Lin - I-10 Bridges, ADOT (2015-001)\Dwg\t8774t22.dgn

SURVEY NO. | FINISHED PLANS- | REVISIONS- | LOCATION- | DATE-

F.H.W.A. REGION	STATE	PROJECT NO.	SHEET NO.	TOTAL SHEETS	RECORD DRAWING
9	ARIZ.	010-E(219)T	34	82	

010 PM 267

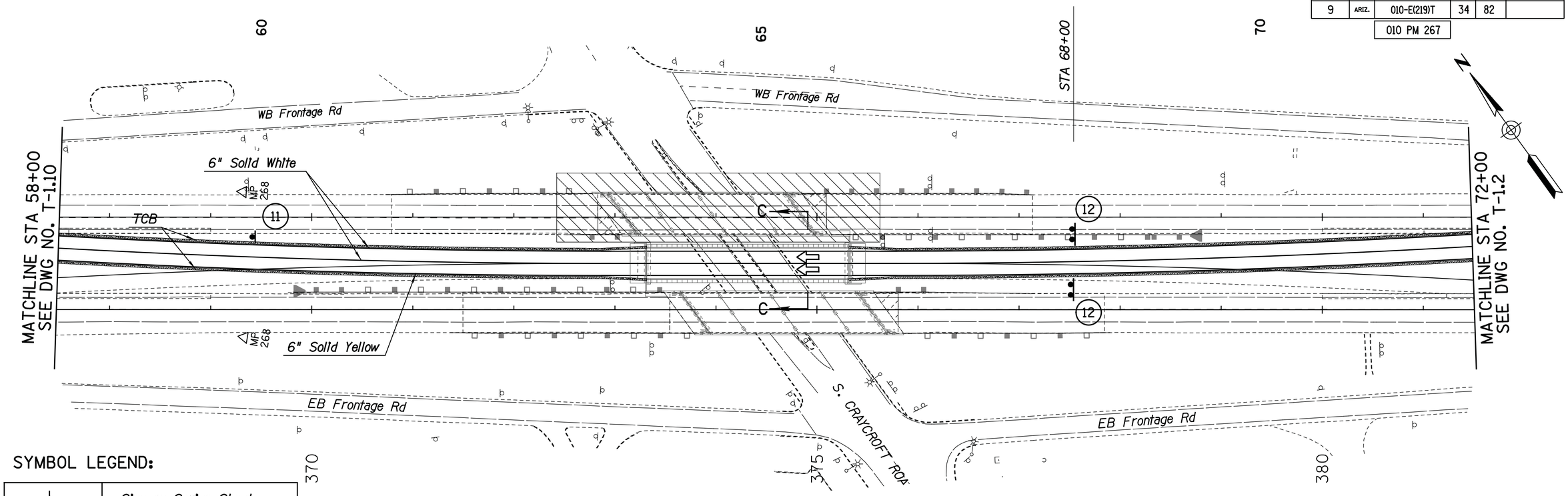

SYMBOL LEGEND:

	Sign on Spring Stand
	Sign on Rigid Stand
	Sign on Embedded Posts
	Type II Barricades
XXXXX XXXXX	Changeable Message Sign
	Sand Barrel Crash Cushion
	Direction of Travel
	Work Area

SIGN LEGEND:

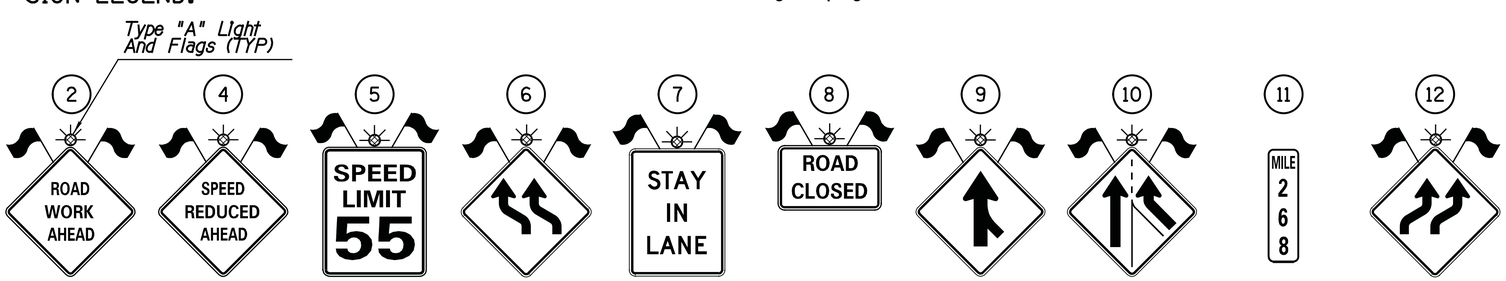

W20-1aAZ 48"x48" | W3-5aAZ 48"x48" | R2-1 (55) 48"x60" BLACK ON WHITE | W1-4bL 48"x48" | R4-9 36"x48" BLACK ON WHITE | R11-2 48"x30" | W4-1R 48"x48" | W4-3R 48"x48" | D10-3 12"x48" WHITE ON GREEN | W1-4bR 48"x48"

NOTES:

1. All Type II barricades on tapers shall be 40' spacing (TYP).
2. All Type II barricades on tangents shall be 80' spacing (TYP).
3. All existing striping shall remain unless noted otherwise.

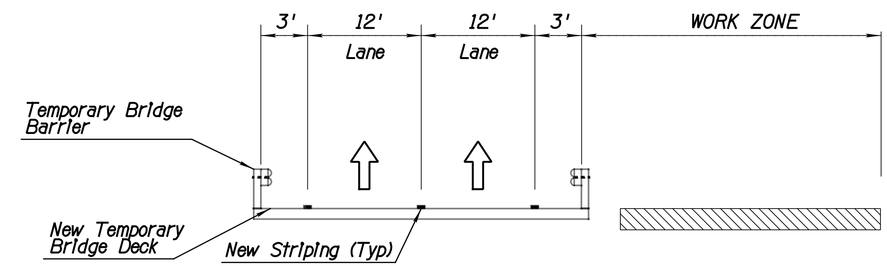

SECTION C-C

Note:
Temporary bridge barrier shown for reference only (it is included in the cost of the temporary bridge). See structure sheets for details.

DETAIL TC4

WB I-10 MAINLINE DETOUR
SHEET 2 OF 4

	NAME	DATE
DESIGN	B. GOOD	6/16
DRAWN	B. GOOD	6/16
CHECKED	JW/EE	6/16

CivTech Inc.
10605 N. Hayden Rd. Suite 140 Scottsdale, AZ 85260
480.659.4250 p
480.659.0595 f
info@civtech.com

ARIZONA DEPARTMENT OF TRANSPORTATION
INFRASTRUCTURE DELIVERY AND OPERATIONS DIVISION
TRAFFIC DESIGN SERVICES

TRAFFIC CONTROL PLAN
I-10 WB DETOUR
STA 58+00 TO 33+00

ROUTE: I-10
LOCATION: CRAYCROFT RD TI OP STR #594 & #595

Registered Professional Engineer (Civil) CERTIFICATE NO. 53396 ERICA RAE EGGEN Date Signed 06/17/16 ARIZONA, U.S.A.
Expires 6-30-18

DWG. NO. T-1.11

TRACS NO. H8774 01C | 010-E(219)T | ___ OF ___

SURVEY NO. | FINISHED PLANS- | REVISIONS- | LOCATION- | DATE-

6/17/2016 Z:\Civtech\Projects\15-1600 TY Lin - I-10 Bridges, ADOT (2015-001)\Dwg\t8774t23.dgn

F.H.W.A. REGION	STATE	PROJECT NO.	SHEET NO.	TOTAL SHEETS	RECORD DRAWING
9	ARIZ.	010-E(219)T	35	82	
		010 PM 267			

NOTES:

1. All Type II barricades on tapers shall be 40' spacing (TYP).
2. All Type II barricades on tangents shall be 80' spacing (TYP).
3. All existing striping shall remain unless noted otherwise.

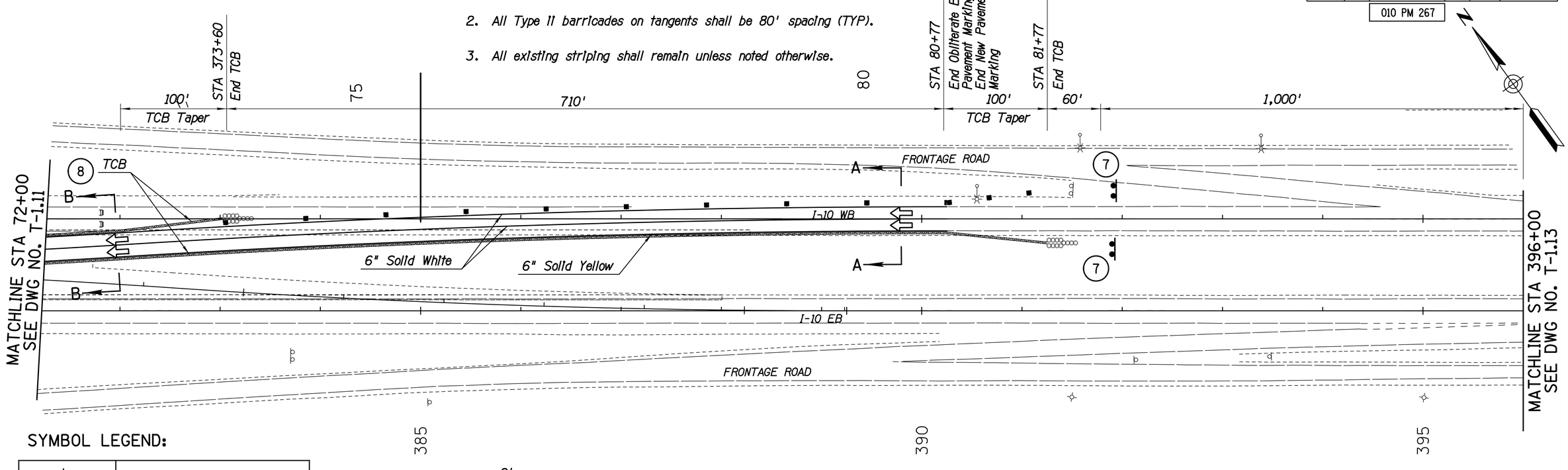

SYMBOL LEGEND:

	Sign on Spring Stand
	Sign on Rigid Stand
	Sign on Embedded Posts
	Type II Barricades
XXXXX XXXXX	Changeable Message Sign
	Sand Barrel Crash Cushion
	Direction of Travel
	Work Area

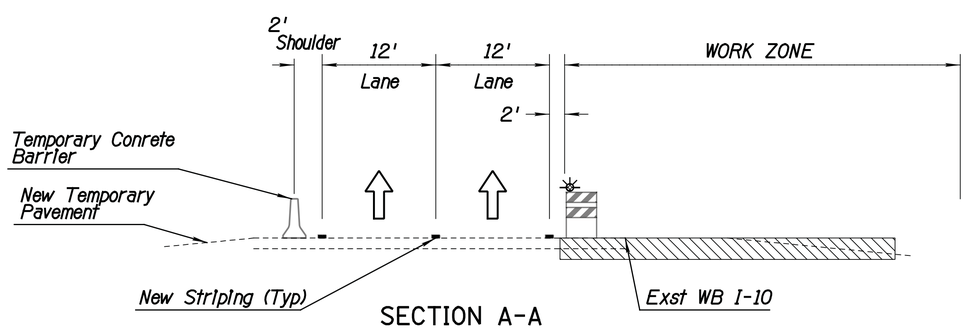

SECTION A-A

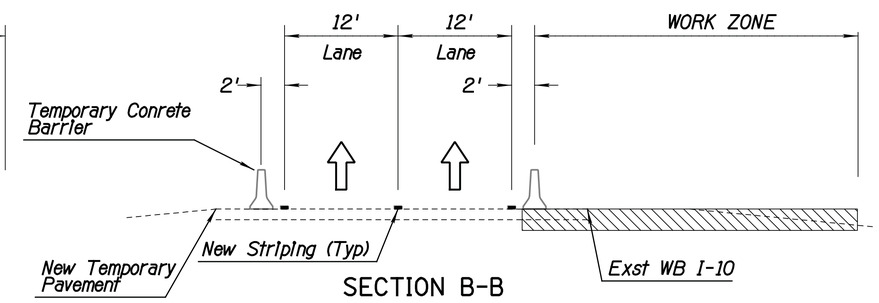

SECTION B-B

SIGN LEGEND:

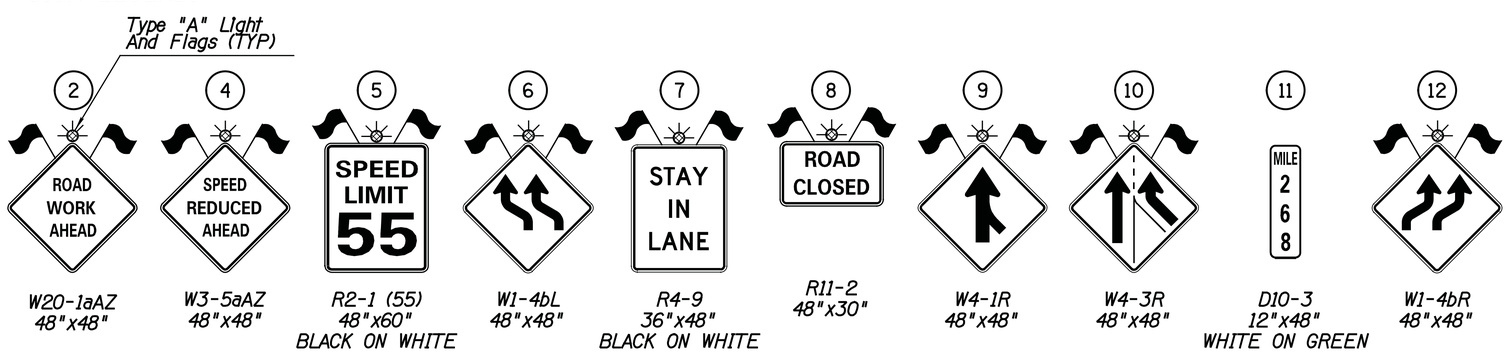

DETAIL TC4

WB I-10 MAINLINE DETOUR
SHEET 3 OF 4

	NAME	DATE
DESIGN	B. GOOD	6/16
DRAWN	B. GOOD	6/16
CHECKED	JW/EE	6/16

CivTech Inc.
10605 N. Hayden Rd. Suite 140 Scottsdale, AZ 85260
480.659.4250 p
480.659.0566 f
info@civtech.com

ARIZONA DEPARTMENT OF TRANSPORTATION
INFRASTRUCTURE DELIVERY AND OPERATIONS DIVISION
TRAFFIC DESIGN SERVICES

TRAFFIC CONTROL PLAN
I-10 WB DETOUR
STA 33+00 TO 396+00

Registered Professional Engineer (Civil) CERTIFICATE NO. 53398 ERICA RAE EGGEN Date Signed 06/17/16 ARIZONA, U.S.A.
Expires 6-30-18

ROUTE	LOCATION
I-10	CRAYCROFT RD TI OP STR #594 & #595

DWG. NO. T-1.12

TRACS NO. H8774 01C | 010-E(219)T | ____ OF ____

SURVEY NO. | FINISHED PLANS- | REVISIONS- | LOCATION- | DATE-

6/17/2016 Z:\Civtech\Projects\15-1600 TY Lin - I-10 Bridges, ADOT (2015-001)\Dwg\t8774t24.dgn

F.H.W.A. REGION	STATE	PROJECT NO.	SHEET NO.	TOTAL SHEETS	RECORD DRAWING
9	ARIZ.	010-E(219)T	36	82	
		010 PM 267			

NOTES:

1. All Type II barricades on tapers shall be 40' spacing (TYP).
2. All Type II barricades on tangents shall be 80' spacing (TYP).
3. All existing striping shall remain unless noted otherwise.

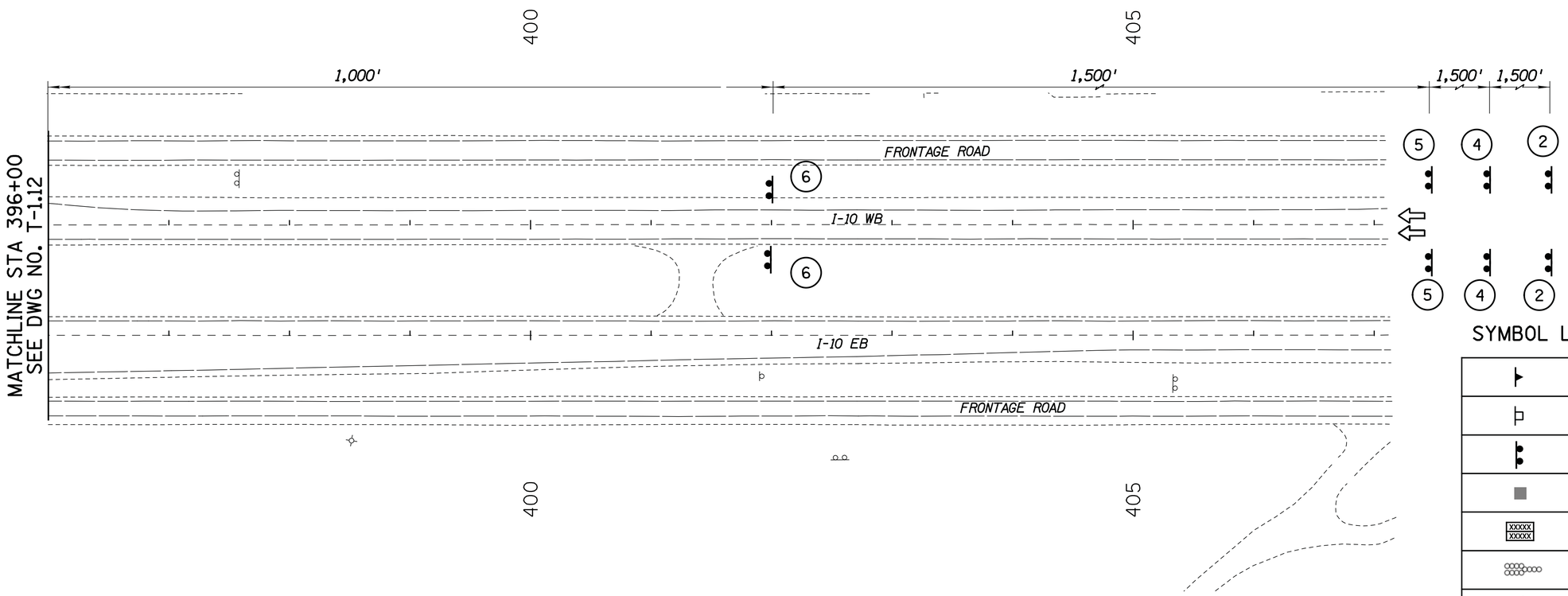

SYMBOL LEGEND:

	Sign on Spring Stand
	Sign on Rigid Stand
	Sign on Embedded Posts
	Type II Barricades
XXXXX XXXXX	Changeable Message Sign
	Sand Barrel Crash Cushion
	Direction of Travel
	Work Area

SIGN LEGEND:

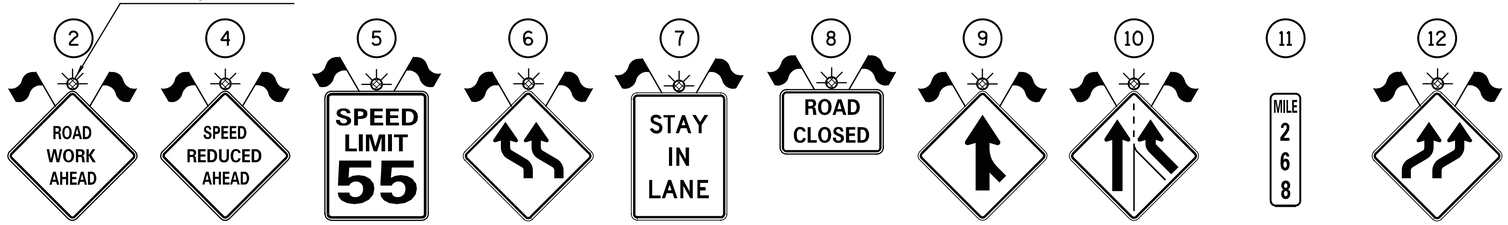

W20-1aAZ 48"x48"	W3-5aAZ 48"x48"	R2-1 (55) 48"x60" BLACK ON WHITE	W1-4bL 48"x48"	R4-9 36"x48" BLACK ON WHITE	R11-2 48"x30"	W4-1R 48"x48"	W4-3R 48"x48"	D10-3 12"x48" WHITE ON GREEN	W1-4bR 48"x48"

DETAIL TC4

WB I-10 MAINLINE DETOUR
SHEET 4 OF 4

	NAME	DATE
DESIGN	B. GOOD	6/16
DRAWN	B. GOOD	6/16
CHECKED	JW/EE	6/16

CivTech Inc.
10605 N. Hayden Rd. Suite 140 Scottsdale, AZ 85260
480.659.4250 p
480.656.0568 f
info@civtech.com

ARIZONA DEPARTMENT OF TRANSPORTATION
INFRASTRUCTURE DELIVERY AND OPERATIONS DIVISION
TRAFFIC DESIGN SERVICES

TRAFFIC CONTROL PLAN
I-10 WB DETOUR
STA 342+00 TO 353+00

Registered Professional Engineer (Civil) CERTIFICATE NO. 53396 ERICA RAE EGGEN 06/17/16 Date Signed ARIZONA, U.S.A.
Expires 6-30-18

ROUTE	LOCATION
I-10	CRAYCROFT RD TI OP STR #594 & #595

DWG. NO. T-1.13

TRACS NO. H8774 01C | 010-E(219)T | ___ OF ___

SURVEY NO. | FINISHED PLANS- | REVISIONS- | LOCATION- | DATE-

6/17/2016 Z:\Civtech\Projects\15-1600 TY Lin - I-10 Bridges, ADOT (2015-001)\Dwg\t8774t25.dgn

F.H.W.A. REGION	STATE	PROJECT NO.	SHEET NO.	TOTAL SHEETS	RECORD DRAWING
9	ARIZ.	010-E(219)T	37	82	
		010 PM 267			

PAVEMENT MARKING NOTES:

1. Final striping shall be 90 mil (0.090 inches) thick alkyd extruded thermoplastic reflectorized striping placed over the existing striping, placed at a minimum of 30 calendar days after the initial striping. All other markings shall be applied at the same time.

2. Permanent edge line striping shall be 90 mil (0.090 inches) thick alkyd extruded thermoplastic reflectorized striping. Pavement marking tape shall be placed on lane lines and gore striping.

3. All reflective raised pavement markers shall be installed so that the reflective face of each marker is facing the direction of traffic and is perpendicular to the direction of traffic flow.

4. All reflective raised pavement markers shall have an abrasion-resistant coating on the face of the prismatic reflectors and shall conform to detail M-19 of the ADOT Standard Drawings. They shall be installed with a bituminous adhesive which is on the ADOT Approved Products List.

5. Where raised pavement markers are placed along solid striping, the nearest edge of each marker shall be offset two inches from the nearest edge of the stripe.

6. The contractor shall install ground-in rumble strips continuously along edge lines, except on concrete surfaces or on bridges, with no more than half an inch of ACFC. The ground-in rumble strips shall conform to detail M-22 of the ADOT Standard Drawings.

7. The contractor shall clean the roadway surface to the satisfaction of the Engineer, by sweeping and air-jet blowing, immediately prior to the placement of all pavement markings. The roadway surface shall be dry and the air and pavement temperatures shall be a minimum of 55 degree F and rising for the placement of thermoplastic striping. The roadway surface shall be dry and the air and pavement temperatures shall not be less than 60 degrees F for the installation of Type I, II, or III pavement marking tape. Type I tape shall not be installed if rain is anticipated 48 hours prior to or after intended installation date.

8. It is the contractor's responsibility to ensure that the final surface course is placed so that the striping is offset one foot clear of any construction joint, unless otherwise directed by the Engineer.

9. At the completion of the final pavement surface each day, center lines, lane lines and edge lines shall be striped with one application of standard reflectorized traffic paint at the locations of the permanent striping if the roadway will be open to traffic. The paint shall have a minimum thickness of 15 mils wet.

10. The contractor shall be responsible for the layout and installation of permanent pavement markings on the final surface course following control points that have been set no more than 50 feet apart along the lines to be striped.

11. When stripe obliteration is necessary, it shall be accomplished by an approved method. Painting over striping, removal of pavement, and overlaying pavement do not constitute stripe obliteration.

12. The contractor shall preserve all roadway signs, sign supports, object markers, and milepost markers. The contractor shall replace any signs, sign supports or markers damaged as a result of the construction at no additional cost to the Department.

13. The pavement marking drawings are schematic only and not to scale. The contractor shall follow all dimensions and details when installing pavement markings.

14. The Engineer may modify pavement marking plans. For lane lines, dotted lines and edge lines, permanent pavement marking shall be 6 inches in width. The length of pavement markings for quantities are based on a 4 inch wide stripe equivalent.

APPROXIMATE PAVEMENT MARKING QUANTITIES

ITEM DESCRIPTION		UNIT	TOTAL LENGTH
PERMANENT PAVEMENT MARKING PAINT	4" WHITE	L.FT.	7,475
	4" YELLOW	L.FT.	5,980
90 MIL (0.090 INCH) THICK, EXTRUDED THERMOPLASTIC	6" WHITE	L.FT.	8,820
	6" YELLOW	L.FT.	8,970
PAVEMENT MARKING TAPE	6" WHITE	L.FT.	2,243
	12" WHITE	L.FT.	300
PAVEMENT MARKER, RAISED	TYPE C	EACH	150
	TYPE D	EACH	300
REMOVAL OF CURING COMPOUND FOR STRIPING		L.FT.	1,058
PRIMER SEALER FOR THERMOPLASTIC STRIPING		L.FT.	1,058
RUMBLE STRIP (12 INCH)		L.FT.	4,837

NOTE: PAVEMENT MARKING QUANTITIES REFLECT 4" EQUIVALENTS.

	NAME	DATE
DESIGN	E. EGGEN	6/16
DRAWN	E. EGGEN	6/16
CHECKED	J. WILLETT	6/16

CivTech Inc.
10605 N. Hayden Rd. Suite 140 Scottsdale, AZ 85260
480.658.6250 p
480.658.6566 f
info@civtech.com

ARIZONA DEPARTMENT OF TRANSPORTATION
INFRASTRUCTURE DELIVERY AND OPERATIONS DIVISION
TRAFFIC DESIGN SERVICES

PAVEMENT MARKING
NOTES AND QUANTITIES

Registered Professional Engineer (Civil)
CERTIFICATE NO. 53398
ERICA RAE EGGEN
06/17/16
Date Signed
ARIZONA, U.S.A.
Expires 6-30-18

ROUTE	LOCATION
I-10	CRAYCROFT RD TI OP STR #594 & #595

DWG. NO. T-2.01

TRACS NO. H8774 01C | 010-E(219)T | ____ OF ____

SURVEY NO. | FINISHED PLANS- | REVISIONS- | LOCATION- | DATE-

F.H.W.A. REGION	STATE	PROJECT NO.	SHEET NO.	TOTAL SHEETS	RECORD DRAWING
9	ARIZ.	010-E(219)T	38	82	

010 PM 267

SIGNING NOTES:

1. All signs shall be in compliance with the Manual on Uniform Traffic Control Devices (MUTCD), Signing and Marking Standard Drawings, and the ADOT Traffic Engineering Manual of Approved Signs.
2. The sign locations and the post lengths are approximate. The contractor shall verify the sign locations and actual post lengths with the Engineer prior to installing signs.
3. The bottom of each sign shall be at least 7 feet above the nearest edge of pavement and at least 7 feet above the ground under the sign.
4. Offsets for all signs shall be measured from the edge of the roadway to the nearest edge of the sign.
5. All new signs shall be fabricated of flat sheet aluminum as indicated in Section 608.
6. The reflective sheeting on all new traffic signs shall be Type IX and XI sheeting and meet criteria established in Section 1007 of the Specifications.
7. All new signs shall be installed on new square tube posts with foundations as indicated in detail S-3 of the ADOT Standard Drawings.
8. The Engineer may modify the signing plans.
9. Shop drawings will be required.
10. The contractor shall inventory all signs to be removed or covered and note damaged signs to the Engineer at the time of covering or removal. All signs damaged by covering or removal shall be replaced by the contractor at the contractors expense.

APPROXIMATE SIGN QUANTITIES		
DESCRIPTION	UNIT	QUANTITY
REMOVE SIGN	EACH	2
FOUNDATION FOR SIGN POST (CONCRETE)	EACH	4
SIGN PANELS	S.F.	40
POST	L.F.	34

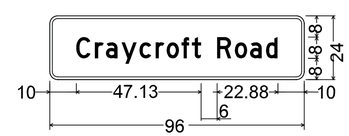

D3-1(freeway-post mount);
3.00" Radius, 1.00" Border, White on Green;
[Craycroft Road] D 75% spacing;

	NAME	DATE
DESIGN	E. EGGEN	6/16
DRAWN	E. EGGEN	6/16
CHECKED	J. WILLETT	6/16

CivTech Inc.
10605 N. Hayden Rd. Suite 140 Scottsdale, AZ 85260
480.659.4250 p
480.659.0566 f
info@civtech.com

ARIZONA DEPARTMENT OF TRANSPORTATION
INFRASTRUCTURE DELIVERY AND OPERATIONS DIVISION
TRAFFIC DESIGN SERVICES

SIGNING NOTES AND QUANTITIES

Registered Professional Engineer (Civil) CERTIFICATE NO. 53398 ERICA RAE EGGEN 06/17/16 Date Signed ARIZONA, U.S.A.
Expires 6-30-18

ROUTE: I-10
LOCATION: CRAYCROFT RD TI OP STR #594 & #595

DWG. NO. T-2.02

TRACS NO. H8774 01C | 010-E(219)T | ___ OF ___

SURVEY NO. | FINISHED PLANS- | REVISIONS- | LOCATION- | DATE-

6/17/2016 Z:\Civtech\Projects\15-1600 TY Lin - I-10 Bridges, ADOT (2015-001)\Dwg\T8774SNS02.dgn

F.H.W.A. REGION	STATE	PROJECT NO.	SHEET NO.	TOTAL SHEETS	RECORD DRAWING
9	ARIZ.	010-E(219)T	39	82	
		010 PM 267			

Plan Sheet No.	Station and Sign Number	MOAS Sign Code	Work: New	Work: Existing: Replace Panel	Work: Existing: Relocate Panel	Work: Existing: Modify Legend	Work: Existing: Remove	Work: Existing: To Remain	Offset (ft)	Mounting Height (ft)	Background Color	Panel: Legend	Panel: Width (in)	Panel: Height (in)	Panel: Area (sq ft)	Panel: Type	Bid Item Number	Ground Mounted: Foundations	Ground Mounted: Post: Type	Ground Mounted: Post: Total Length (ft)	Ground Mounted: New Slipbases	Ground Mounted: Stringer: Type	Ground Mounted: Stringer: Total Length (ft)	Overhead: Structure Type	Overhead: No. of Lights	Remarks
T-2.05	EB STA 371+95	D3-1	X				X		8	7		CRAYCROFT ROAD	120	24	20	F-DA	6080025	2	2 1/2 T	17						Existing sign removed during median detour.
	WB STA 375+67	D3-1	X				X		8	7		CRAYCROFT ROAD	120	24	20	F-DA	6080025	2	2 1/2 T	17						Existing sign removed during median detour.

Notes:

1. The Engineer shall verify post lengths and elevations.
2. The Engineer may shift a sign in order to achieve a more desirable location.
3. Quantities are approximate and for the contractor's information only.

Panel Types:

RWM: Regulatory, Warning, or Marker
F-DA: Flat-sheet aluminum with direct applied or silk-screened characters
F-Dem: Flat-sheet aluminum with demountable characters
Ext: Aluminum extrusions
Incr: Aluminum sheet increment

Post Types:

2S: 2" Single Perforated
2 1/2S: 2 1/2" Single Perforated
2T 2" Telescoping
2 1/2T: 2 1/2" Telescoping
S4x7.7: Breakaway
W6x12: Breakaway
W8x18: Breakaway
W10x22: Breakaway

Stringer Types:

P: Square-tube post
T: T-section (WT 3x6)

	NAME	DATE
DESIGN	E. EGGEN	6/16
DRAWN	E. EGGEN	6/16
CHECKED	J. WILLETT	6/16

CivTech Inc.
10605 N. Hayden Rd. Suite 140 Scottsdale, AZ 85260
480.659.4250 p
480.656.5566 f
info@civtech.com

ARIZONA DEPARTMENT OF TRANSPORTATION
INFRASTRUCTURE DELIVERY AND OPERATIONS DIVISION
TRAFFIC DESIGN SERVICES

SIGN SUMMARY SHEET

Registered Professional Engineer (Civil) CERTIFICATE NO. 53398 ERICA RAE EGGEN Date Signed 06/17/16 ARIZONA, U.S.A.
Expires 6-30-18

ROUTE: I-10
LOCATION: CRAYCROFT RD TI OP STR #594 & #595

DWG. NO. T-2.03

TRACS NO. H8774 01C | 010-E(219)T | ___ OF ___

6/17/2016 Z:\Civtech\Projects\15-1600 TY Lin - I-10 Bridges, ADOT (2015-001)\Dwg\T8774SSS01.dgn

F.H.W.A. REGION	STATE	PROJECT NO.	SHEET NO.	TOTAL SHEETS	RECORD DRAWING
9	ARIZ.	010-E(219)T	40	82	

010 PM 267

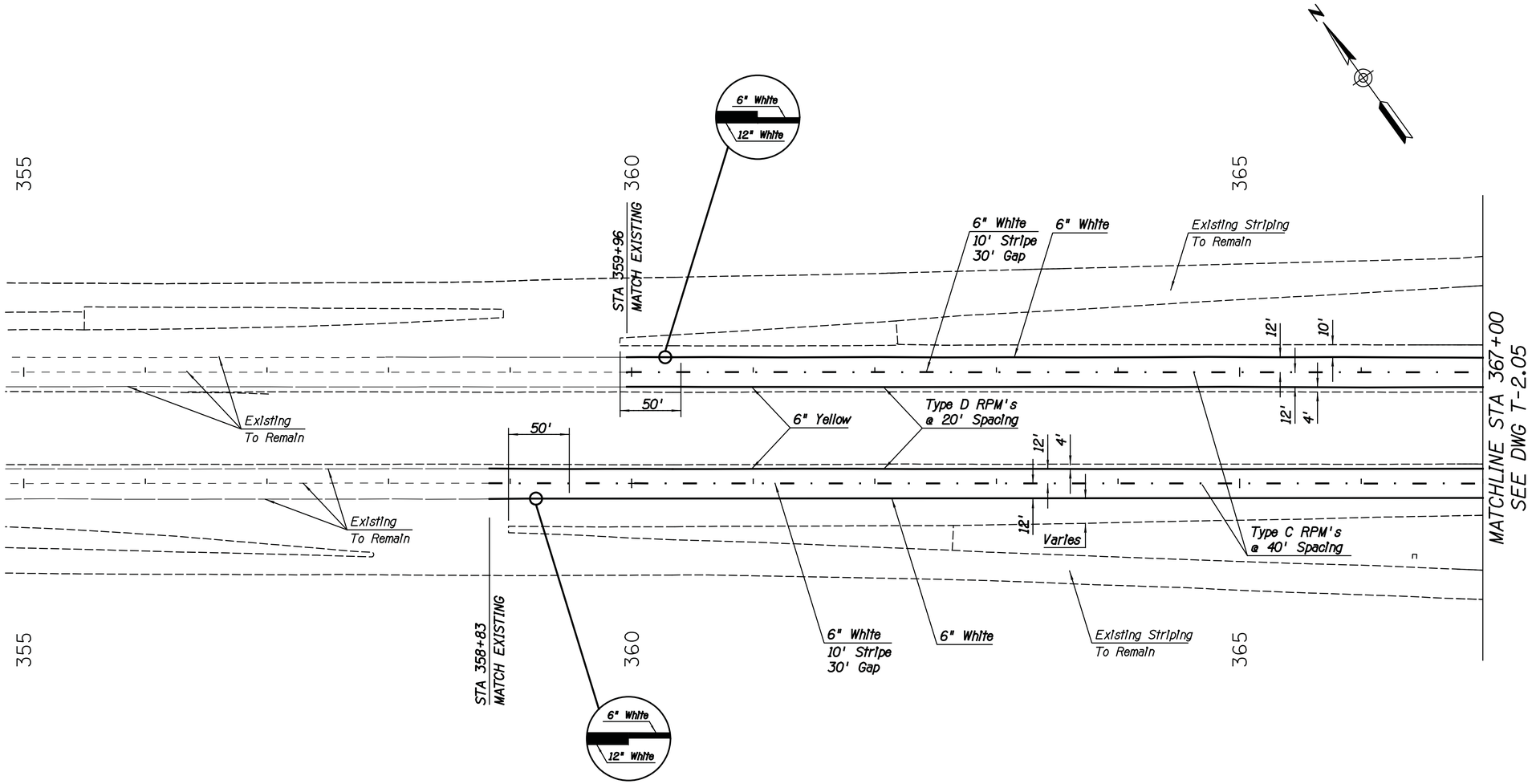

	NAME	DATE
DESIGN	E. EGGEN	6/16
DRAWN	E. EGGEN	6/16
CHECKED	J. WILLETT	6/16

CivTech Inc.
10605 N. Hayden Rd. Suite 140 Scottsdale, AZ 85260
480.656.6200 p
480.656.6566 f
info@civtech.com

ARIZONA DEPARTMENT OF TRANSPORTATION
INFRASTRUCTURE DELIVERY AND OPERATIONS DIVISION
TRAFFIC DESIGN SERVICES

PAVEMENT MARKING AND SIGNING PLAN
STA 355+00 TO 367+00

Registered Professional Engineer (Civil) CERTIFICATE NO. 53398 ERICA RAE EGGEN Date Signed 06/17/16 ARIZONA, U.S.A.
Expires 6-30-18

ROUTE	LOCATION
I-10	CRAYCROFT RD TI OP STR #594 & #595

DWG. NO. T-2.04

TRACS NO. H8774 01C | 010-E(219)T | ____ OF ____

SURVEY NO. | FINISHED PLANS- | REVISIONS- | LOCATION- | DATE-

6/17/2016 Z:\Civtech\Projects\15-1600 TY Lin - I-10 Bridges, ADOT (2015-001)\Dwg\T8774PMS01.dgn

F.H.W.A. REGION	STATE	PROJECT NO.	SHEET NO.	TOTAL SHEETS	RECORD DRAWING
9	ARIZ.	010-E(219)T	41	82	

010 PM 267

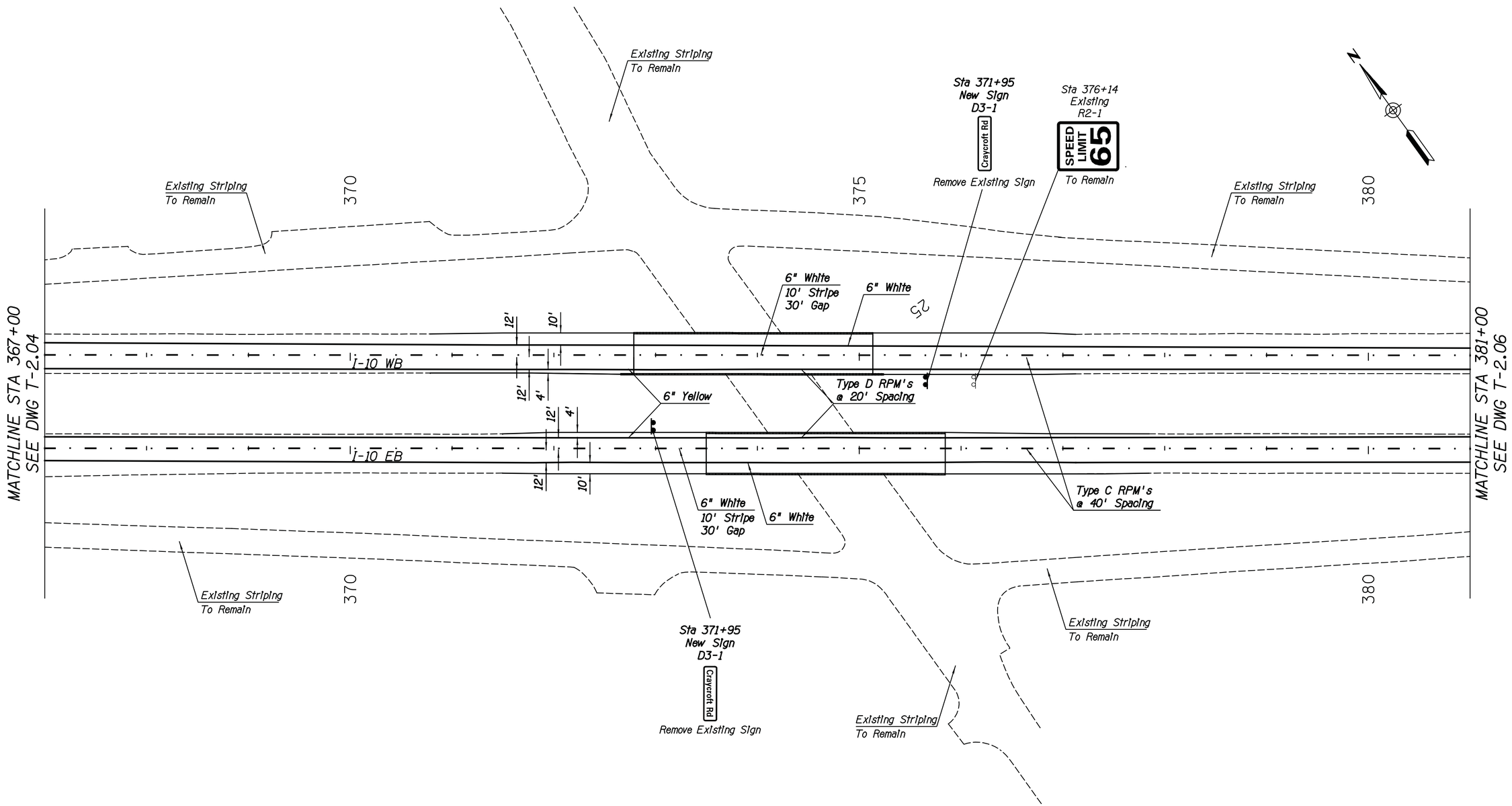

	NAME	DATE
DESIGN	E. EGGEN	6/16
DRAWN	E. EGGEN	6/16
CHECKED	J. WILLETT	6/16

CivTech Inc.
10605 N. Hayden Rd. Suite 140 Scottsdale, AZ 85260
480.658.6250 p
480.658.6566 f
info@civtech.com

ARIZONA DEPARTMENT OF TRANSPORTATION
INFRASTRUCTURE DELIVERY AND OPERATIONS DIVISION
TRAFFIC DESIGN SERVICES

PAVEMENT MARKING AND SIGNING PLAN
STA 367+00 TO 381+00

Registered Professional Engineer (Civil)
CERTIFICATE NO. 53398
ERICA RAE EGGEN
06/17/16
Date Signed
ARIZONA, U.S.A.
Expires 6-30-18

ROUTE	LOCATION
I-10	CRAYCROFT RD TI OP STR #594 & #595

DWG. NO. T-2.05

TRACS NO. H8774 01C | 010-E(219)T | ___ OF ___

SURVEY NO. | FINISHED PLANS- | REVISIONS- | LOCATION- | DATE-

6/17/2016 Z:\Civtech\Projects\15-1600 TY Lin - I-10 Bridges, ADOT (2015-001)\Dwg\T8774PMS02.dgn

F.H.W.A. REGION	STATE	PROJECT NO.	SHEET NO.	TOTAL SHEETS	RECORD DRAWING
9	ARIZ.	010-E(219)T	42	82	

010 PM 267

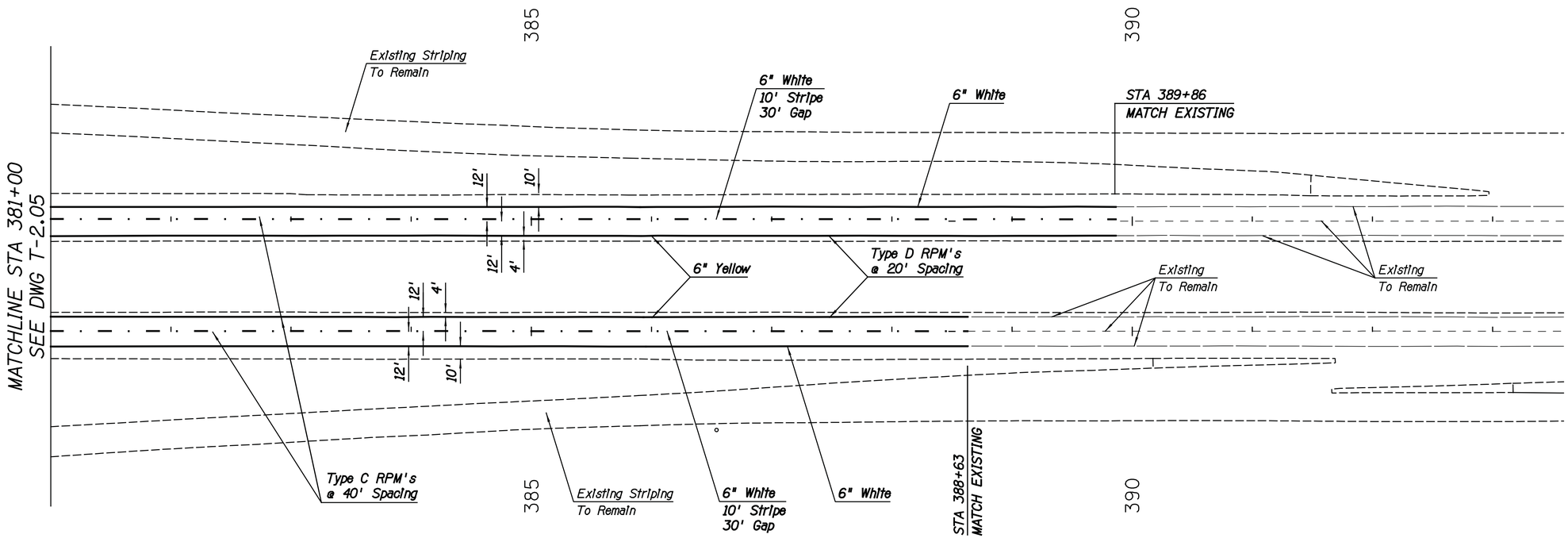

	NAME	DATE
DESIGN	E. EGGEN	6/16
DRAWN	E. EGGEN	6/16
CHECKED	J. WILLETT	6/16

CivTech Inc.
10605 N. Hayden Rd.
Suite 140
Scottsdale, AZ 85260
480.656.4250 p
480.656.0366 f
info@civtech.com

ARIZONA DEPARTMENT OF TRANSPORTATION
INFRASTRUCTURE DELIVERY AND OPERATIONS DIVISION
TRAFFIC DESIGN SERVICES

PAVEMENT MARKING AND
SIGNING PLAN
STA 381+00 TO 393+00

Registered Professional Engineer (Civil)
CERTIFICATE NO. 53398
ERICA RAE EGGEN
Date Signed 06/17/16
ARIZONA, U.S.A.
Expires 6-30-18

ROUTE	LOCATION
I-10	CRAYCROFT RD TI OP STR #594 & #595

DWG. NO. T-2.06

TRACS NO. H8774 01C | 010-E(219)T | ____ OF ____

SURVEY NO. | FINISHED PLANS- | REVISIONS- | LOCATION- | DATE-

6/17/2016 Z:\Civtech\Projects\15-1600 TY Lin - I-10 Bridges, ADOT (2015-001)\Dwg\T8774PMS03.dgn

F.H.W.A. REGION	STATE	PROJECT NO.	SHEET NO.	TOTAL SHEETS	RECORD DRAWING
9	ARIZ.	010-E(219)T	43	82	
		010 PM 267			

FMS CONDUIT GENERAL NOTES:

1. *All conduits shall be 2 inch PVC per the Standard Specifications.*
2. *The station locations for pull boxes are approximate and shall be verified in the field by the Engineer.*
3. *All pull boxes and conduits shall be placed within ADOT right-of-way.*
4. *All conduits shall have a No. 8 AWG bare bond wire installed per Section 732-2.01 of the Standard Specifications.*
5. *All pull boxes shall be left in a clean condition, free of dirt and debris, upon completion of the work.*
6. *All material and installation shall conform to the 2008 Standard Specifications and ADOT's Traffic Signals and Lighting Standard Drawings.*
7. *The locations of utilities shown on the plans are approximate. All involved utilities may not be shown on the plans. The Contractor shall be responsible, per Section 730-6 of the Standard Specifications, for contacting all utilities for exact locations prior to any construction activity.*

PULL BOX SCHEDULE		
NO.	TYPE	LOCATION
1	NO. 7	STA 372+64, 31' LT
2	NO. 7	STA 374+99, 31' LT
3	NO. 7	STA 376+99, 30' RT
4	NO. 7	STA 373+65, 30' RT

FOR BARRIER BOX AND BARRIER CONDUIT LOCATIONS AND DETAILS, SEE BRIDGE PLANS.

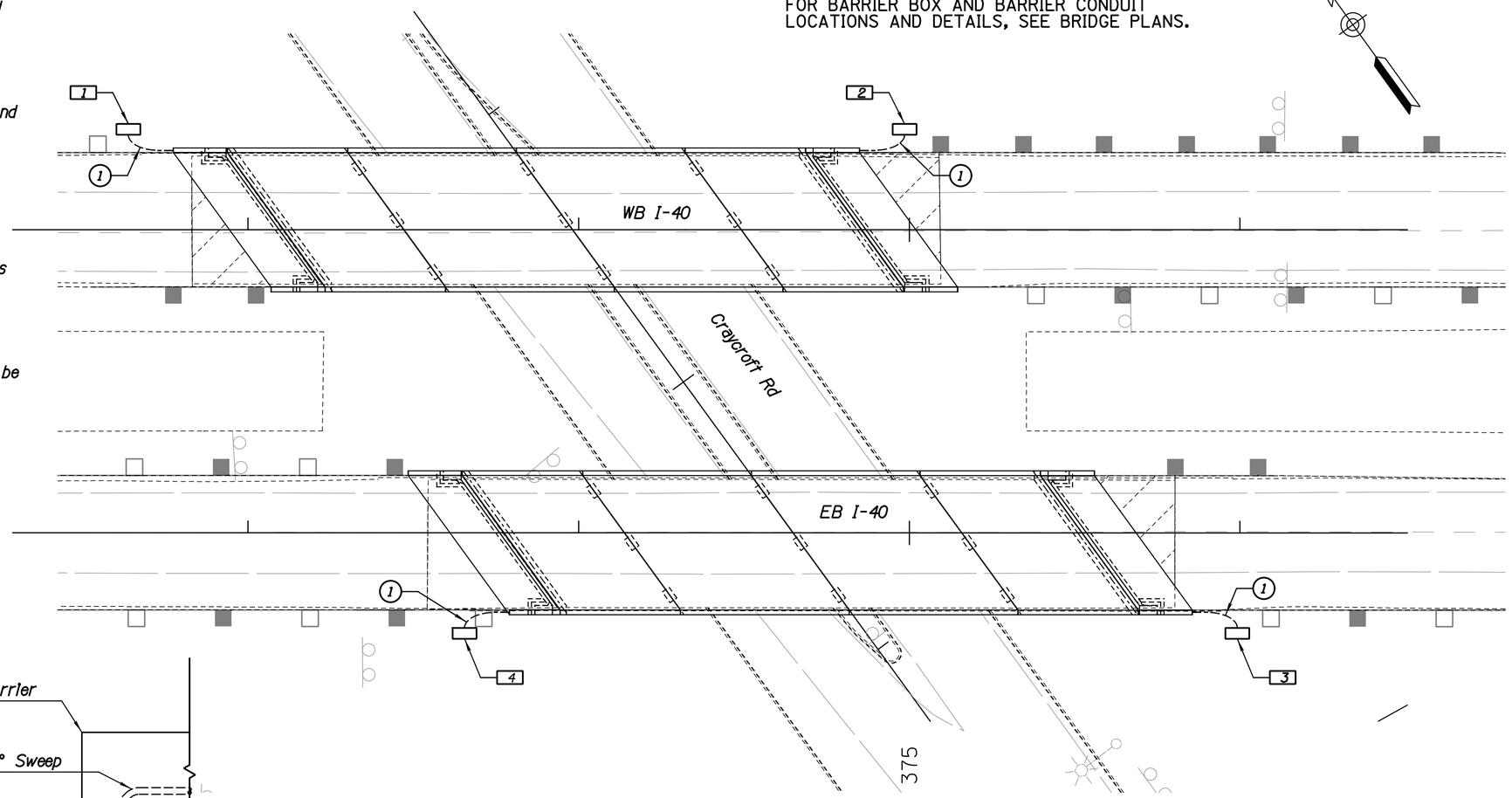

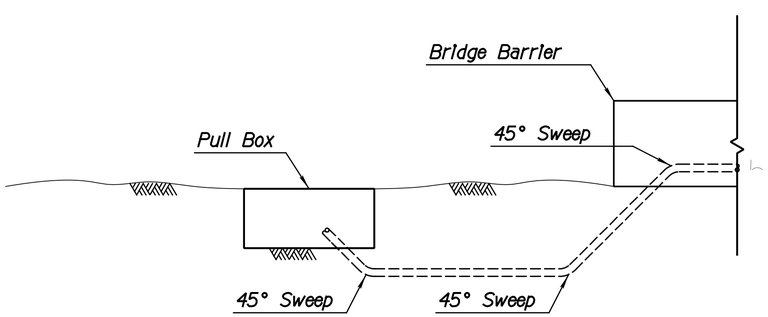

CONDUIT SWEEP FROM BARRIER TO PULL BOX

NTS

NOTES:

1. *Install 2" Sch. 40 PVC conduit from end of barrier to pull box.*

APPROXIMATE FMS QUANTITIES		
DESCRIPTION	*UNIT*	*QUANTITY*
PULL BOX (NO. 7)	*EACH*	*4*
ELECTRICAL CONDUIT (2") (PVC)	*L.F.*	*72*

	NAME	DATE
DESIGN	B. GOOD	6/16
DRAWN	B. GOOD	6/16
CHECKED	JW/EE	6/16

CivTech Inc.
10605 N. Hayden Rd. Suite 140 Scottsdale, AZ 85260
480.659.4250 p 480.659.0595 f
info@civtech.com

ARIZONA DEPARTMENT OF TRANSPORTATION
INFRASTRUCTURE DELIVERY AND OPERATIONS DIVISION
TRAFFIC DESIGN SERVICES

FMS
CONDUIT PLAN

Registered Professional Engineer (Civil) CERTIFICATE NO. 53398 ERICA RAE EGGEN Date Signed 06/17/16 ARIZONA, U.S.A.
Expires 6-30-18

ROUTE	LOCATION
I-10	CRAYCROFT RD TI OP STR #594 & #595

DWG. NO. T-3.01

TRACS NO. H8774 01C | 010-E(219)T | ____ OF ____

SURVEY NO. | FINISHED PLANS- | REVISIONS- | LOCATION- | DATE-

6/17/2016 Z:\Civtech\Projects\15-1600 TY Lin - I-10 Bridges, ADOT (2015-001)\Dwg\t87741t01.dgn

F.H.W.A. REGION	STATE	PROJECT NO.	SHEET NO.	TOTAL SHEETS	RECORD DRAWING
9	ARIZ.	010-E(219)T	44	82	
		010 PM 267			

PART 1 - To be completed by the Landscape Architect or Design Engineer

I. PROJECT DESCRIPTION

A. Owner Name and Address:

Arizona Department of Transportation
205 South 17th Avenue
Phoenix, Arizona 85007-3213

B. Project TRACS Number: H8774 01C

C. Project Location: I-10

City: TUCSON County: PIMA

Beginning Latitude (NAD 83): 34° 43' 48"
Beginning Longitude (NAD 83): 114° 18' 04"

Ending Latitude (NAD 83): 34° 46' 57"
Ending Longitude (NAD 83): 114° 10' 40"

To obtain the project latitude/longitude data, refer to the Flash Earth web link below (Bing Maps with labels): *http://www.flashearth.com/*

D. Project Description: TEMPORARY DETOUR BRIDGE, DECK REHABILITATION, AND EROSION CONTROL MEASURES

II. HYDROLOGIC INFORMATION

A. Project Size:

Length (Mi.) 0.55

Area (Ac.) 13.9

B. Area to be Graded (Ac.): 6.0

C. Percentage of the site that is impervious before and after construction:

Percentage before Construction: 27%

Percentage after Construction: 33%

D. Receiving Water(s), refer to the Arizona Department of Water Resources Web Link below (USGS Topo) : *https://gisweb.azwater.gov/WellRegistry/Default.aspx*

XX

III. PRESERVATION OF EXISTING VEGETATION

A. In accordance with the specifications, existing vegetation will be preserved. Clearing limits shall be confined to areas that require grading. Existing vegetation outside the boundaries of the cleared area shall be protected from damage by construction activities. Existing trees within the area to be cleared shall be preserved and protected, wherever possible.

IV. SOIL STABILIZATION MEASURES

A. All disturbed soil, which will not be paved, riprapped or otherwise covered to prevent erosion, will be revegetated and/or landscaped in accordance with the project plans and specifications.

B. Scheduling of the revegetation effort can be found on PART 2 of this sheet under SCHEDULE OF MAJOR ACTIVITIES.

V. MEASURES TO CONTROL EROSION AND SEDIMENT

A. Temporary Erosion and Sediment Controls: (Refer to the Following SWPPP Site Plan and Specifications)

- ___ Erosion Control Mattings
- ___ Temporary Diversion Dikes
- X Check Dams
- X Rock Inlet/Outlet Protection
- ___ Sediment Control Berms
- ___ Silt Fences
- X Wattles (Excelsior/Straw)
- X Excelsior Logs / Sediment Logs
- ___ Seeding (Class II with mulch)
- X Others Describe: ROCK MULCH CONSTRUCTION ENTRANCES

B. Permanent Erosion and Sediment Controls and Post-construction Storm Water Management Measures: (Refer to SWPPP Site Plan and Specifications)

- ___ Crown Ditch/Dike
- X Rock Protection
- ___ Rock Riprap Channel Lining
- ___ Sediment Basin
- ___ Embankment Curb
- ___ Spillways and Downdrains
- ___ Minibenching
- X Seeding established as a perennial vegetative cover with a density of 70% of the native background vegetative cover.
- ___ Others Describe:

VI. MAINTENANCE AND INSPECTIONS

A. Frequency of Inspections:

___ At least once every 7 calendar days, OR

X Every 14 calendar days and within 24 hours after a rainfall of 0.5 inches (12.7 mm) or more.

NOTE: RAINFALL GAUGE TO BE KEPT ON-SITE TO DETERMINE DEPTH OF RAINFALL

B. Inspection Procedure:

ADOT's Contractor's Inspection Log and Compliance Evaluation Report (CER) will be completed by the contractor or his representative and will be kept on file for 3 years. A signed copy of the CER will be sent to the ADOT Resident Engineer. If repairs are necessary, they shall be initiated within 24 hours of the inspection report.

PART 2 - To be completed by ADOT & CONTRACTOR

http://www.azdot.gov/inside_adot/OES/Water_Quality/Stormwater/Docs/swppp_construction_template.dot

I. SCHEDULE OF MAJOR ACTIVITIES

A. Project Schedule:

Start Date:

End Date:

B. Construction Sequencing Schedule: (Attach Additional Sheets)
Construction Activities

II. INVENTORY OF POLLUTANTS

A. The materials or substances checked below are expected to be onsite during construction:

- ___ Concrete
- ___ Asphalt
- ___ Paints
- ___ Fertilizer
- ___ Herbicides
- ___ Wood
- ___ Fuel
- ___ Oil
- ___ Others, List:

III. POLLUTION CONTROL MEASURES

A. Other Best Management Practices:

- ___ Wind Erosion and Dust Control
- ___ Solid Waste Management
- ___ Equipment Maintenance Procedures
- ___ Designated Washout Areas
- ___ Stabilized Construction Entrance
- ___ Protected Chemical and Material Storage Area
- ___ Other, Describe:

IV. SPILL PREVENTION AND RESPONSE

A. Spill Prevention:
The procedures outlined in the Best Management Practices listed under Pollution Control Measures will be followed to prevent and contain spills of hazardous material. These preventative action include BMP's on equipment maintenance and proper handling, storage and disposal of chemicals and materials. All manufacturer's recommendations for usage, clean-up and disposal shall be followed.

B. Spill Response:
In the event of any accidental spill of chemicals or hazardous materials, contact the ADOT Traffic Operations Center at 800-379-3701. If a reportable quantity is discharged into the storm water, ADOT shall contact the National Response Center and document the spill to the EPA. ADOT's Hazardous Materials Specialist shall provide instructions.

V. CERTIFICATION OF COMPLIANCE WITH FEDERAL, STATE AND LOCAL REGULATIONS

A. This Storm Water Pollution Prevention Plan (SWPPP) has been prepared in accordance with the latest updated version of ADOT's EROSION AND POLLUTION CONTROL MANUAL FOR HIGHWAY DESIGN AND CONSTRUCTION, published by ADOT Intermodal Transportation Division.

___ SWPPP is in compliance with other Federal, State Laws, or Local Regulations.

VI. POLLUTION PREVENTION PLAN CERTIFICATION

A. I certify under penalty of law that I have personally examined and am familiar with the information submitted in this application and all attachments and that, based on my inquiry of those persons immediately responsible for obtaining the information contained in the application, I believe that the information is true, accurate and complete. I am aware that there are significant penalties for submitting false information, including the possibility of fine and imprisonment. (Applies to VI. B., C., and D)

B. The operator/contractor as defined in AZPDES should sign the SWPPP in accordance with CGP Part VII. K, and retain the SWPPP on-site at the construction site or other location easily accessible during normal business hours.

Signature: (operator/contractor)
Date:
Name:
Title:
Company:

C. ADOT Resident Engineer

Signature: (owner)
Date:
Name:
Title:
ADOT District:

D. MUNICIPALITY for Municipal Separate Storm Sewer System (MS4)

Signature:
Date:
Name:
Title:
MS4 Name:

VII. OTHER REQUIREMENTS

A. A copy of the General Permit and NOI are attached in accordance to AZPDES General Permit for Storm Water Discharges From Construction Activities To The Water Of The United States.

B. Projects that are within ¼ mile of impaired or unique waters require the SWPPP to be sent to ADEQ in combination with the NOI. Refer to the Arizona Outstanding, Impaired and Not-Attaining Waters *.PDF Maps by County web link: *http://www.azdot.gov/inside_adot/OES/Water_Quality/Stormwater/outstanding_unique_waters_maps_by_county.asp*

C. For further requirements, check the ADEQ's Smart NOI Web Page: *https://az.gov/webapp/noi/smartnoi/menu.do*

	NAME	DATE
DESIGN	E NICHOLS	06/16
DRAWN	J WOTRING	06/16
CHECKED	D DEWITT	06/16

J2 Engineering and Environmental Design
4649 East Cotton Gin Loop, Suite B2
Phoenix, Arizona 85040
Phone: 602.438.2221
www.j2designus

ARIZONA DEPARTMENT OF TRANSPORTATION
INFRASTRUCTURE DELIVERY AND OPERATIONS DIVISION
ROADSIDE DEVELOPMENT SECTION

SWPPP STANDARD SHEET

Registered Professional Engineer (Civil) CERTIFICATE NO. 19210 DIRK D. DEWITT Date Signed 06/21/16 ARIZONA, U.S.A.
Expires: 9/30/2017

ROUTE	LOCATION	
I-10	CRAYCROFT RD TI OP STR #594 & #595	

DWG NO. EC-1.01

TRACS NO. H8774 01C | 010-E(219)T | ___ OF ___

SURVEY NO. | FINISHED PLANS- | REVISIONS- | LOCATION- | DATE-

F.H.W.A. REGION	STATE	PROJECT NO.	SHEET NO.	TOTAL SHEETS	RECORD DRAWING
9	ARIZ.	010-E(219)T	45	82	

010 PM 267

EROSION CONTROL TYPE INSTALLATION & QUANTITY

LOCATION	(SW) Sediment Wattle Slope Protection (LF) SW-X E1 9" Left	9" Right	20" Left	20" Right	(CD) Check Dam Sediment Log (LF) CD E2 Left	Right	(RP) Rock Protection (Gradation 'C') (CY) RP E3 Left	Right	(DS) Rock Mulch Drainage Swale (Gradation 'C') (CY) DS E5 Left	Right	(SD) Storm Drain Protection SD E4 12" Sediment Wattle (LF) Left	Right	Rock Protection Grad. C (CY) Left	Right	Gravel Bag (EA) Left	Right	(CE) Construction Entrance (Gradation 'C') (CY) CE E6 Left	Right	Erosion Control Seeding (AC) Left	Right	QUANTITIES 9" Sediment Wattle Slope Protection (LF)	20" Sediment Wattle Slope Protection (LF)	Check Dam (20" Sediment Log) (LF)	Rock Protection (Gradation 'C') (CY)	Rock Mulch Drainage Swale (Gradation 'C') (CY)	Storm Drain Protection (12" Sediment Wattle) (LF)	Storm Drain Rock Protection Gradation 'C' (CY)	Storm Drain Protection (Gravel Bags) (EA)	Construction Entrance (SY)	Erosion Control Seeding (AC)	REMARKS
Exst EB I-10 Cst ℄																															
Sta 353+00 to Sta 367+00 (EC-3.01)	0	511	0	487	80	0	3	0	0	2	0	0	0	0	0	0	250	0	1.1	0.4	511	487	80	3	2	0	0	0	250	1.5	
Sta 367+00 to Sta 381+00 (EC-3.02)	0	2,835	0	917	100	0	3	0	50	29	0	0	0	0	0	0	0	250	2.0	1.2	2,835	917	100	3	79	0	0	0	250	3.2	
Sta 381+00 to Sta 395+00 (EC-3.03)	0	0	0	0	40	0	0	0	0	0	58	0	4	0	24	0	250	0	1.1	0.0	0	0	40	0	0	58	4	24	250	1.1	
Total:																					3,346	1,404	220	6	81	58	4	24	750	5.8	

SW = 9" or 20" Sediment Wattle
CD = Check Dam
RP = Rock Protection @ Headwalls
DS = Rock Mulch Drainage Swale
SD = Storm Drain Protection
CE = Construction Entrance

CD / E2 Reference letters 'CD' correspond to the type of installation. 'E2' corresponds to the plan detail number.

NOTES:

1. The placement of all Erosion Control Devices listed above may be subject to change and may be adjusted by the Engineer.
2. Engineer is responsible to verify the contractor has sufficient protective measures in place to contain all storm water runoff sediment within project limits and protect all disturbed slopes from erosion.
3. The contractor shall monitor/maintain all "Control Measures" during any shutdown period.
4. Quantities represent both permanent and temporary "Control Measures"

	NAME	DATE
DESIGN	E NICHOLS	06/16
DRAWN	J WOTRING	06/16
CHECKED	D DEWITT	06/16

J2 Engineering and Environmental Design
4649 East Cotton Gin Loop, Suite B2
Phoenix, Arizona 85040
Phone: 602.438.2221
www.j2designs.us

ARIZONA DEPARTMENT OF TRANSPORTATION
INFRASTRUCTURE DELIVERY AND OPERATIONS DIVISION
ROADSIDE DEVELOPMENT SECTION

EROSION CONTROL SUMMARY

Registered Professional Engineer (Civil)
15210
DIRK D. DEWITT
Date Signed 06/17/16
ARIZONA, U.S.A.
Expires: 9/30/2017

ROUTE I-10 | LOCATION CRAYCROFT RD TI OP STR #594 & #595

DWG NO. EC-1.02

TRACS NO. H8774 01C | 010-E(219)T | ___ OF ___

DATE | LOCATION | REVISIONS | FINISHED PLANS | SURVEY NO.

F.H.W.A. REGION	STATE	PROJECT NO.	SHEET NO.	TOTAL SHEETS	RECORD DRAWING
9	ARIZ.	010-E(219)T	46	82	
		010 PM 267			

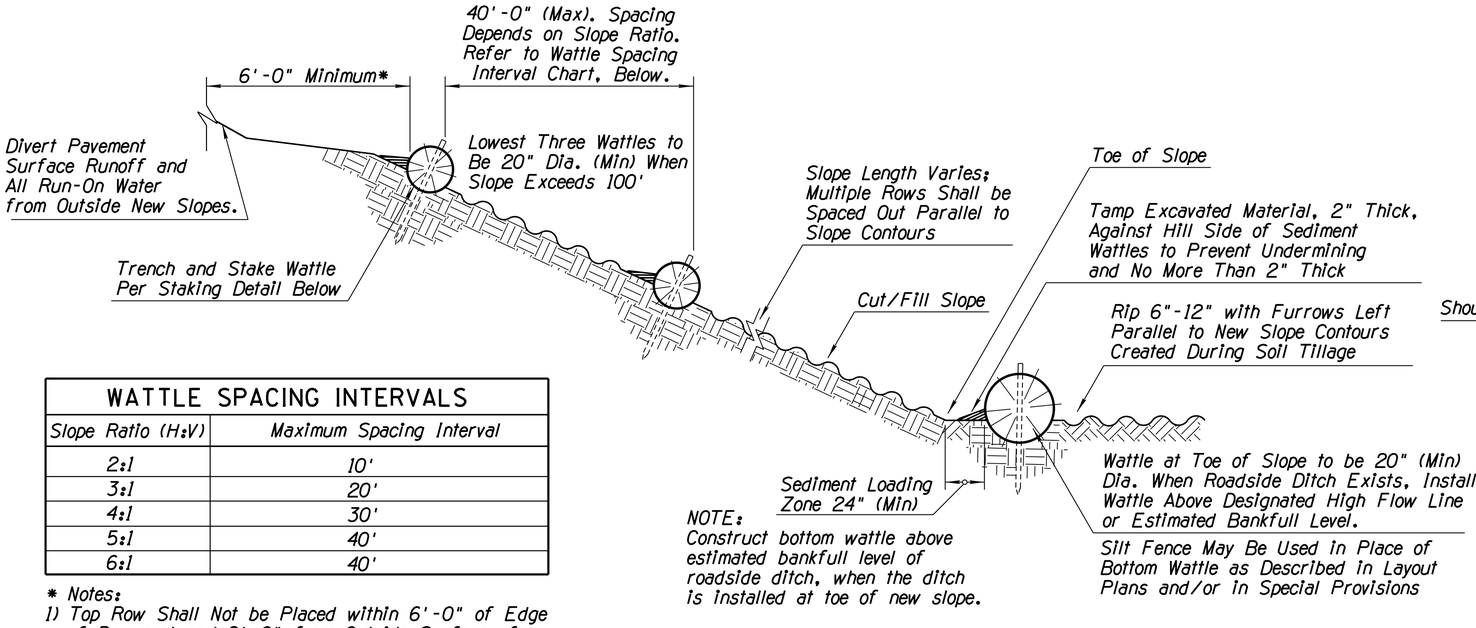

NOTE:
Construct bottom wattle above estimated bankfull level of roadside ditch, when the ditch is installed at toe of new slope.

SECTION (NTS)

WATTLE SPACING INTERVALS	
Slope Ratio (H:V)	Maximum Spacing Interval
2:1	10'
3:1	20'
4:1	30'
5:1	40'
6:1	40'

* Notes:
1) Top Row Shall Not be Placed within 6'-0" of Edge of Pavement and 9'-0" from Outside Surface of Barrier.
2) For erosive soils, place rows of wattles closer together.
3) For soils with low erosive potential, place rows of wattles further apart.

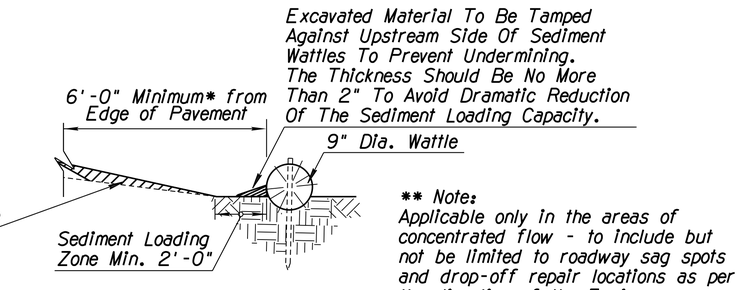

** Note:
Applicable only in the areas of concentrated flow - to include but not be limited to roadway sag spots and drop-off repair locations as per the direction of the Engineer.

NEW SHOULDER BUILDUP **
PROTECTION SECTION (NTS)

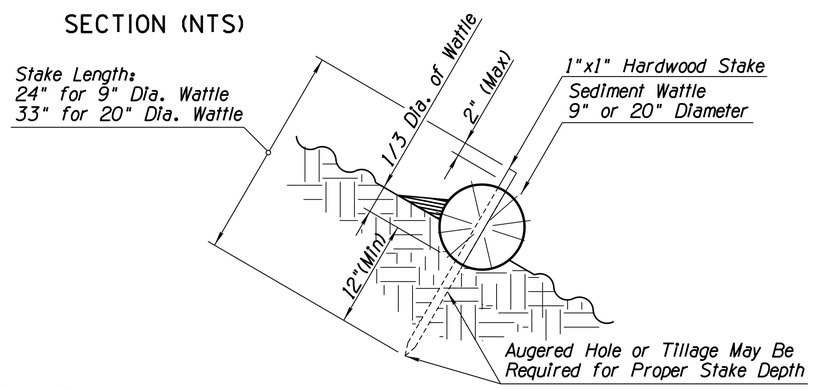

SEDIMENT WATTLE STAKING
DETAIL (NTS)

NOTES:
1. Install Sediment Wattles as slopes are constructed to grade or as directed by the Engineer. Select, install and maintain in conformance with manufacturers' specifications to meet site conditions for slope protection and in accordance with good engineering practices. No Sediment Wattles shall be installed in urban freeway medians, nor where cable barrier systems are employed.
2. Sediment Wattles shall be in continuous contact with trench bottom and sides. Do not overlap wattle ends on top of each other. A 20" Dia. wattle may be made from 2-3 rolled excelsior or straw blankets.
3. Butt adjoining wattles tightly against each other. Drive the first end stake of the second wattle at an angle toward the first wattle to help abut them tightly.
4. Repair any rills or gullies promptly. Make field adjustments and corrections of Wattle BMP immediately if it is causing flooding, erosion, and/or affecting roadway safety.
5. Construction of cut slopes 2:1 and steeper in soil and rock materials that can be ripped shall be constructed, whenever possible, by Minibenching. Refer to Slope Minibenching BMP Detail.
6. Loosening surface soil is not required where Minibenches are used. For seeded areas, tillage shall be performed to form minor ridges and furrows parallel to new slope contours and as specified in Section 805 of the Standard Specifications and these special provisions.
7. Divert and direct run-on water from outside of the slopes to the spillways and/or rock riprap/rock mulch. Diversion dikes and/or ditches are necessary on natural undisturbed slopes beyond the top limits of new slopes to divert run-on water.
8. Installation and maintenance of Sediment Wattle BMPs shall not negatively impact traffic safety, nor the designed function of roadway or bridge drainage facilities.
9. Install and maintain Sediment Wattle BMPs to carry the stormwater of at least 2-year, 24-hour events.
10. The Sediment Wattle BMP's pay/bid item shall include all materials used for this BMP: all ground preparation, furnishing, installing, maintenance, final removal, and disposal of this temporary BMP, as well as returning the area to an acceptable condition as approved by the Engineer.
11. Refer to Standard Specification Section 810-2.06(C) for Sediment Wattle material specifications.
12. Make field adjustments and corrections to ensure NO sensitive biological resources (native species / habitats) will be adversely impacted.

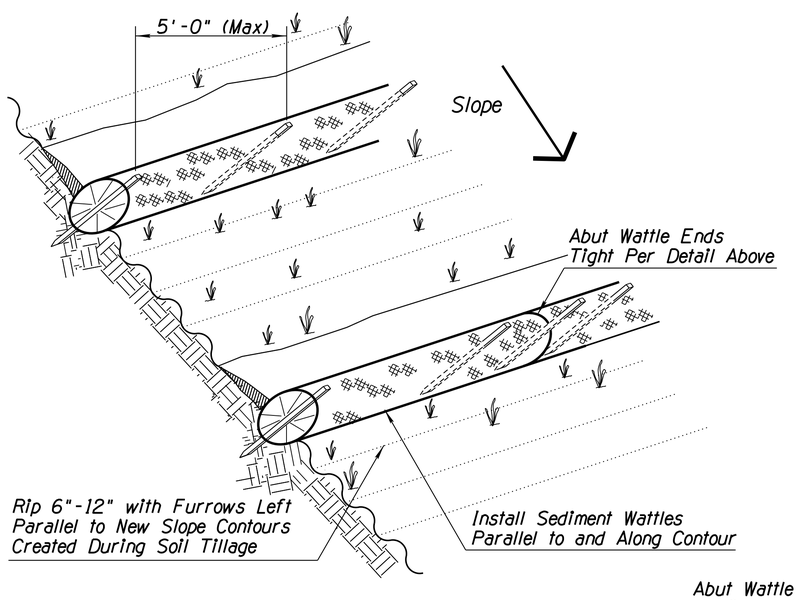

SEDIMENT WATTLE
LAYOUT (NTS)

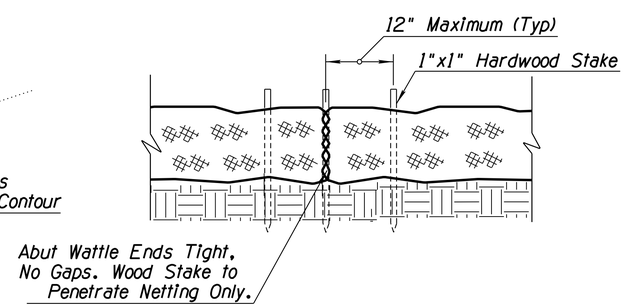

SEDIMENT WATTLE
OVERLAP (NTS)

SW-X
E1

DETAIL E1

NTS

SEDIMENT WATTLE SLOPE PROTECTION

	NAME	DATE
DESIGN	E NICHOLS	06/16
DRAWN	J WOTRING	06/16
CHECKED	D DEWITT	06/16

J2 Engineering and Environmental Design
4649 East Cotton Gin Loop, Suite B2
Phoenix, Arizona 85040
Phone: 602.438.2221
www.j2designs.us

ARIZONA DEPARTMENT OF TRANSPORTATION
INFRASTRUCTURE DELIVERY AND OPERATIONS DIVISION
ROADSIDE DEVELOPMENT SECTION

EROSION CONTROL DETAILS
DETAIL E1

ROUTE: I-10
LOCATION: CRAYCROFT RD TI OP STR #594 & #595

Registered Professional Engineer (Civil)
15210
DIRK D. DEWITT
Date Signed 06/17/16
ARIZONA, U.S.A.
Expires: 9/30/2017

DWG NO. EC-2.01

TRACS NO. H8774 01C | 010-E(219)T | ___ OF ___

PRINTED BY: JWOTRING 6/16/2016 7:30:51 AM 6/16/2016 P:\140755\J2Cad\Sheets\H8774-EC-2.01.dgn

SURVEY NO. | FINISHED PLANS- | REVISIONS- | LOCATION- | DATE-

F.H.W.A. REGION	STATE	PROJECT NO.	SHEET NO.	TOTAL SHEETS	RECORD DRAWING
9	ARIZ.	010-E(219)T	47	82	
		010 PM 267			

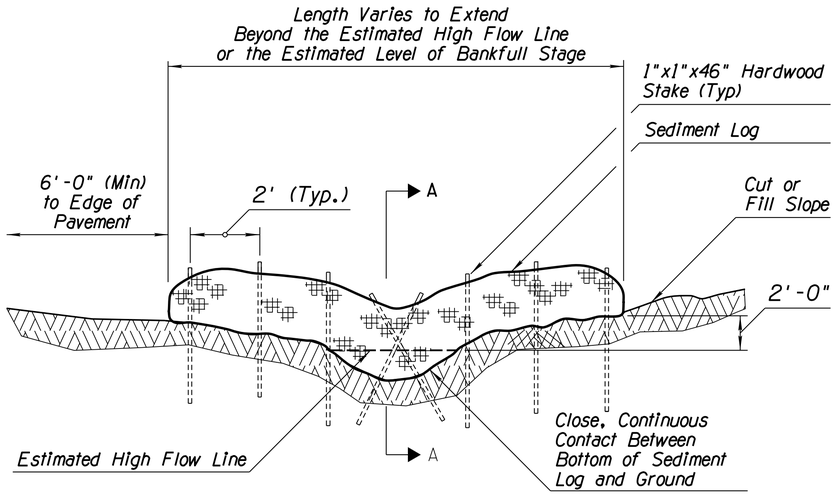

SEDIMENT LOG IN DITCH/CHANNEL
SECTIONAL ELEVATION (NTS)

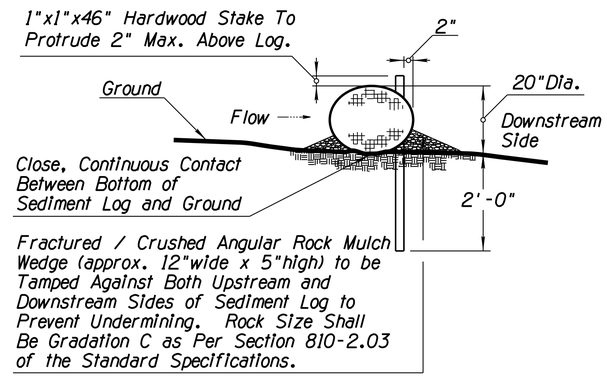

SECTION A-A (NTS)

CD E2 **DETAIL E2** NTS

20" SEDIMENT LOG CHECK DAM

NOTES:

1. Sediment Logs shall not be installed in the urban freeway medians, nor where cable barrier systems are employed.
2. Locate Sediment Logs as indicated in plans, SWPPP or as directed by the Engineer.
3. Select, install and maintain Logs per manufacturers' specifications and good engineering practices.
4. Lay sediment log across prepared ditch or channel. Trenching or burial of Sediment Logs is not required. he close, continuous contact between the bottom of the Log and the ground mandatory. The Logs shall be installed in the ditch, swale or channel bottom perpendicular to the flow of water as shown on detail this sheet.
5. Stake Log as shown. Stakes shall be placed through downstream side only as shown.
6. DO NOT drive stakes through center of the log. Stakes must be driven into the ground as shown.
7. Ensure that no gaps exist between soil and bottom of Sediment Log. Repair any rills or undercuts promptly.
8. Placement of Sediment Logs shall be evaluated by the Engineer in rocky soil conditions.
9. Remove Sediment Log BMPs within the ditches/channels and around the storm drain inlets as per the Direction of the Engineer or as soon as practicable upon stabilization of the construction disturbed area.
10. Dispose of Sediment Logs and trapped sediment material and fill trench created by Sediment Log.
11. The installation and maintenance of Sediment Log BMPs shall not negatively impact traffic safety, nor the designed function of roadway or bridge drainage facilities. Sediment Logs shall be installed and maintained to carry the stormwater of at least 2-year, 24-hour events.
12. Make Field adjustments and corrections of Sediment Log BMP immediately if it is causing flooding, erosion, and/or affecting roadway safety.
13. Rock mulch/riprap may be required for channel/ditch lining or rock check dams for longitudinal ditch slopes that exceed 5% and/or for soil conditions not suitable for log installation.
14. The Sediment Log BMP's pay/bid item shall include all materials used for this BMP: all ground preparation, furnishing, installing, maintenance, final removal, and disposal, as well as returning the area to an acceptable condition as approved by the Engineer.
15. Refer to Standard Specification Section 810-2.06(B) for Sediment Log material specifications.
16. Make field adjustments and corrections to ensure NO sensitive biological resources (native species/habitats) will be adversely impacted.

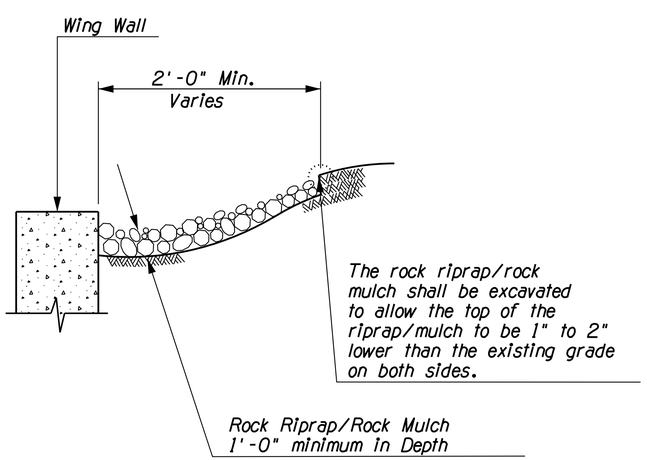

ROCK RIPRAP/ROCK MULCH
FOR HEADWALL TRANSITION
CROSS SECTION (NTS)

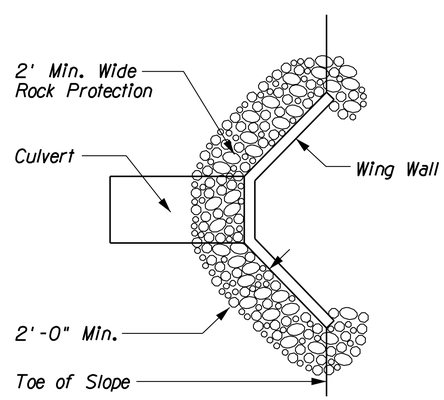

HEADWALL (NTS)

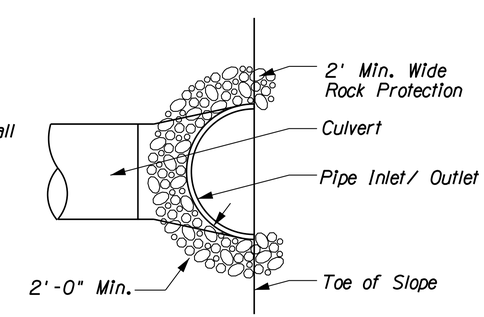

FLARED END SECTION (NTS)

RP E3 **DETAIL E3** NTS

ROCK PROTECTION

NOTES:

1. Rock Riprap/Rock Much shall be angular shaped, crushed rock materials. Natural river-run materials such as rounded river rocks/cobblestones and pebbles are NOT acceptable.
2. Rock Riprap/Rock Mulch within the traffic Clear Zone shall conform to the requirements of Section 810-2.03 Sieve Size Gradation A and/or Gradation C, and Section 913 of the Standard Specifications.
3. Embed rock within traffic recovery area/clear zone into the finished grade so that any portion of the rock above the grade will be less than 4" in height.
4. The installation and maintenance of Rock Protection BMPs shall not negatively impact traffic safety, nor the designed function of roadway or bridge drainage facilities. Rock Protection BMPs shall be installed and maintained to carry the stormwater of at least 2-year, 24-hour events.
5. Make field adjustments and corrections of Rock Protection BMP immediately if it is causing flooding, erosion, and/or affecting roadway safety.
6. The Rock Protection BMP's pay/bid item shall include all materials used for this BMP: all ground preparation, furnishing, installing, maintaining as well as returning the area to an acceptable condition as approved by the Engineer.
7. Make field adjustments and corrections to ensure NO sensitive biological resources (native species/habitats) will be adversely impacted.

	NAME	DATE
DESIGN	E NICHOLS	06/16
DRAWN	J WOTRING	06/16
CHECKED	D DEWITT	06/16

J2 Engineering and Environmental Design
4649 East Cotton Gin Loop, Suite B2
Phoenix, Arizona 85040
Phone: 602.438.2221
www.j2designs

ARIZONA DEPARTMENT OF TRANSPORTATION
INFRASTRUCTURE DELIVERY AND OPERATIONS DIVISION
ROADSIDE DEVELOPMENT SECTION

EROSION CONTROL
DETAILS E2 & E3

Registered Professional Engineer (Civil) 19210 DIRK D. DEWITT Date Signed 06/16/16 ARIZONA, U.S.A.
Expires: 9/30/2017

ROUTE	LOCATION	
I-10	CRAYCROFT RD TI OP STR #594 & #595	DWG NO. EC-2.02
TRACS NO. H8774 01C	010-E(219)T	___ OF ___

F.H.W.A. REGION	STATE	PROJECT NO.	SHEET NO.	TOTAL SHEETS	RECORD DRAWING
9	ARIZ.	010-E(219)T	48	82	

010 PM 267

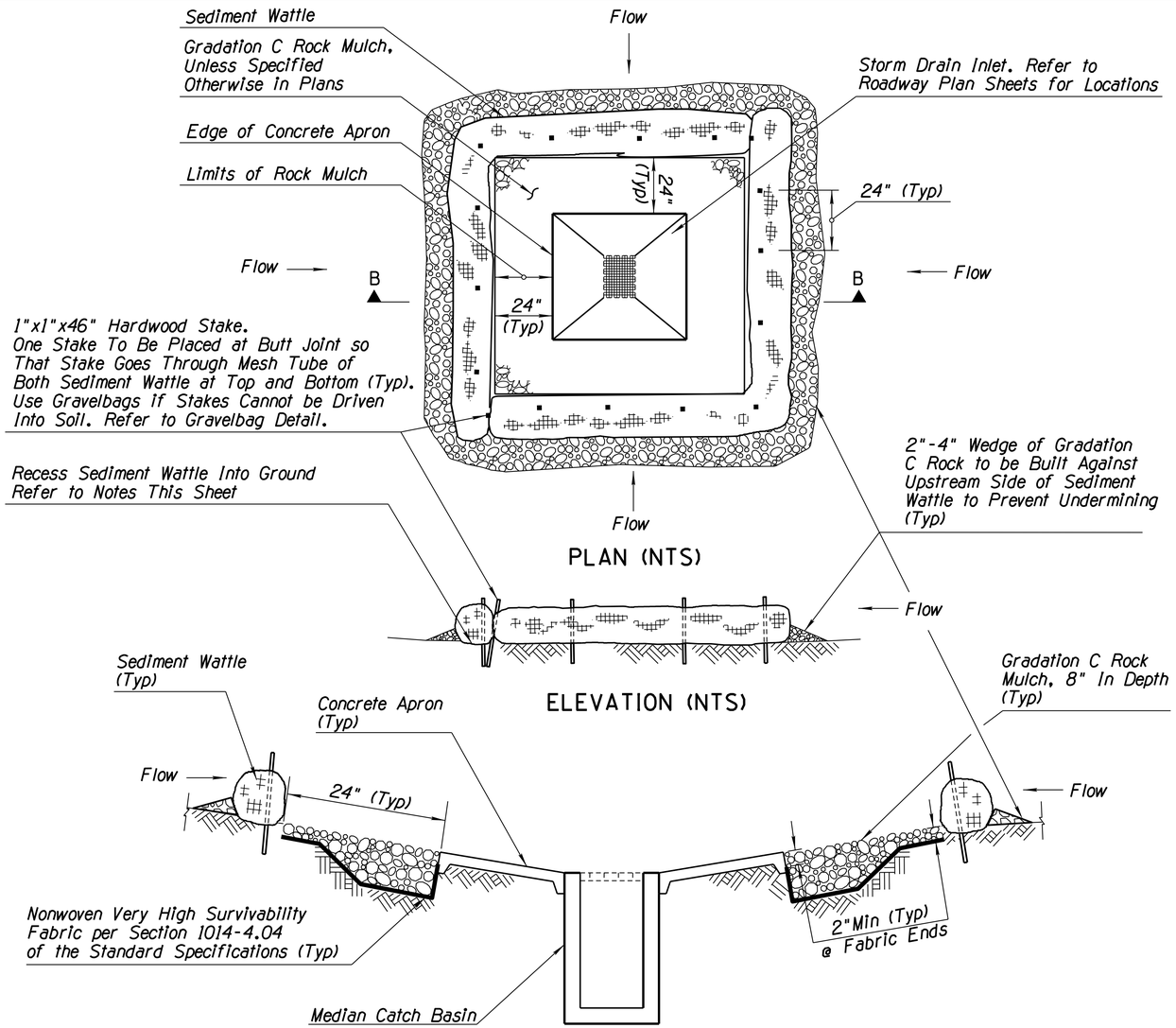

SD E4 **DETAIL E4** NTS

12" SEDIMENT WATTLE STORM DRAIN PROTECTION

NOTES:

1. Sediment wattles shall be located as indicated on plans or as directed by the Engineer. They shall be selected, installed, and maintained per manufacturer's specifications and good engineering practices. Wattle shall be installed perpendicular to the flow of water. Continuous contact between the bottom of the wattle and the ground is mandatory.
2. Stake wattle with 1"x1"x46" Min. hardwood stakes 24" on center. The stake shall be placed through the downstream side only. It is necessary for the stakes to grab one or two inches of netting. Do not drive stake through center of wattle. The stakes must be driven into the ground 24". Stakes at corners shall be placed in an "X" pattern.
3. Make sure no gaps exist between subgrade and sediment wattle. Runoff must not pass under sediment wattle. May require subgrade preparation as directed by Engineer.
4. Repair any rills or gullies promptly.
5. Remove sediment wattle and stakes once construction activities are complete. Dispose of sediment wattles and trapped sediment material and fill trench created by sediment wattle.
6. Refer to Roadway and Drainage Plans and Details for Locations of Inlets and Catch Basins.
7. Field adjust and correct Inlet Protection BMP immediately if it is causing flooding, erosion, and/or affecting roadway safety.

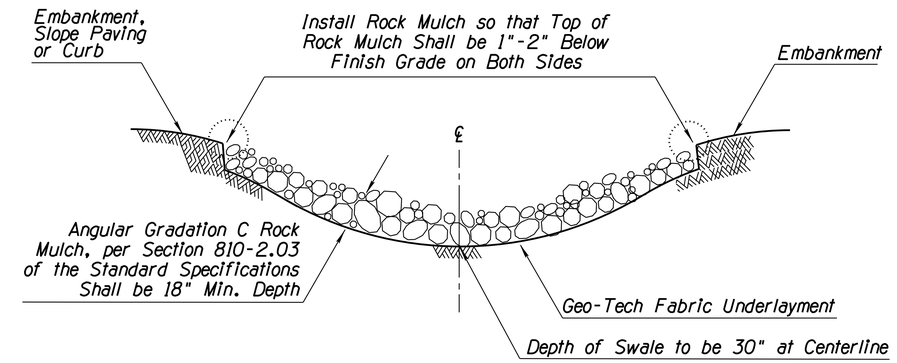

DS E5 **DETAIL E5** NTS

ROCK MULCH DRAINAGE SWALE

	NAME	DATE
DESIGN	E NICHOLS	06/16
DRAWN	J WOTRING	06/16
CHECKED	D DEWITT	06/16

J2 Engineering and Environmental Design
4649 East Cotton Gin Loop, Suite B2
Phoenix, Arizona 85040
Phone: 602.438.2221
www.j2designus

ARIZONA DEPARTMENT OF TRANSPORTATION
INFRASTRUCTURE DELIVERY AND OPERATIONS DIVISION
ROADSIDE DEVELOPMENT SECTION

EROSION CONTROL
DETAILS E4 & E5

ROUTE: I-10
LOCATION: CRAYCROFT RD TI OP STR #594 & #595

Registered Professional Engineer (Civil) 19210 DIRK D. DEWITT Date Signed 9/21/16 ARIZONA, U.S.A.
Expires: 9/30/2017

DWG NO. EC-2.03

TRACS NO. H8774 01C | 010-E(219)T | ___ OF ___

F.H.W.A. REGION	STATE	PROJECT NO.	SHEET NO.	TOTAL SHEETS	RECORD DRAWING
9	ARIZ.	010-E(219)T	49	82	
		010 PM 267			

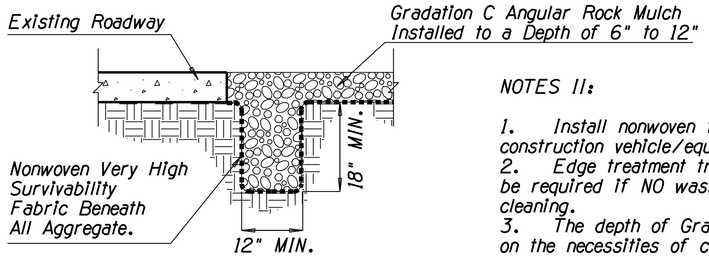

EDGE TREATMENT TRENCHING TYPICAL SECTION (NTS)

NOTES II:

1. Install nonwoven fabric when water is applied for construction vehicle/equipment cleaning on Gravel Pad.
2. Edge treatment trenching and nonwoven fabric shall not be required if NO wash water is used for vehicle/equipment cleaning.
3. The depth of Gravel Pad varies from 6" to 12" based on the necessities of construction vehicle/equipment as per the approval of the Engineer.

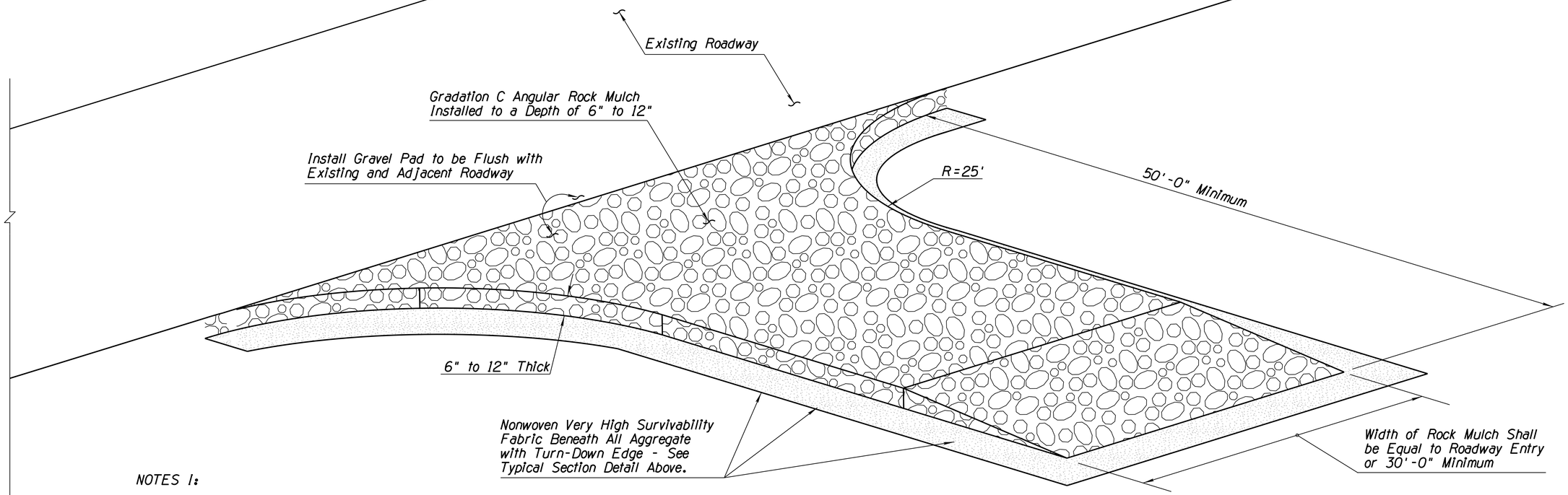

BIRD'S EYE VIEW (NTS)

NOTES I:

1. Install Stabilized Construction Entrance/Exit Gravel Pad BMP for traffic entering or exiting a construction site where sedimentation, clay, silt or other pollutants can be tracked onto public roads and/or adjacent water bodies, as approved by the Engineer. It may also be applied for construction entrance/exit wind erosion/dust control, as approved by the Engineer.
2. Locate new Construction Entrance(s)/Exit(s) at appropriate project entrance/exit points as determined in field with the approval of the Engineer. Relocate Stabilized Construction Entrance/Exit Gravel Pad BMP as needed as project progresses. Replace Rock Mulch materials in drive paths when dirt or mud accumulates.
3. Nonwoven Very High Survivability Fabric shall conform to the standards of Sub-section 1014-4.04 of the Specifications.
4. Rock Mulch materials shall be fractured/crushed rocks in angular shape and as defined in the Sub-section 810-2.03 of the Standard Specifications. Natural river-run materials, especially rounded natural river rocks are not acceptable.
5. Make field adjustments and corrections of Construction Entrance/Exit Gravel Pad BMP immediately if it is causing flooding and/or affecting roadway safety.
6. When paid separately, the Stabilized Construction Entrance/Exit Gravel Pad BMP's pay/bid item shall include all materials used for this BMP: all ground preparation, furnishing, installing, final removal, and disposal of this temporary BMP, as well as returning the area to an acceptable condition as approved by the Engineer.
7. * Fence/barricade pay/bid item shall not be included as a component of the Stabilized Construction Entrance/Exit Gravel Pad BMP pay/bid item.
8. Make field adjustments and corrections to ensure NO sensitive biological resources (native species / habitats) will be adversely impacted.

CE E6 **DETAIL E6** NTS

STABILIZED CONSTRUCTION ENTRANCE /EXIT GRAVEL PAD

	NAME	DATE
DESIGN	E NICHOLS	06/16
DRAWN	J WOTRING	06/16
CHECKED	D DEWITT	06/16

J2 Engineering and Environmental Design
4649 East Cotton Gin Loop, Suite B2
Phoenix, Arizona 85040
Phone: 602.438.2221
www.j2design.us

ARIZONA DEPARTMENT OF TRANSPORTATION
INFRASTRUCTURE DELIVERY AND OPERATIONS DIVISION
ROADSIDE DEVELOPMENT SECTION

EROSION CONTROL
DETAIL E6

Registered Professional Engineer (Civil) 19210 DIRK D. DEWITT Date Signed 09/11/16 ARIZONA, U.S.A.
Expires: 9/30/2017

ROUTE I-10 | LOCATION CRAYCROFT RD TI OP STR #594 & #595

DWG NO. EC-2.04

TRACS NO. H8774 01C | 010-E(219)T | ___ OF ___

SURVEY NO. | FINISHED PLANS- | REVISIONS- | LOCATION- | DATE-

F.H.W.A. REGION	STATE	PROJECT NO.	SHEET NO.	TOTAL SHEETS	RECORD DRAWING
9	ARIZ.	010-E(219)T	50	82	

010 PM 267

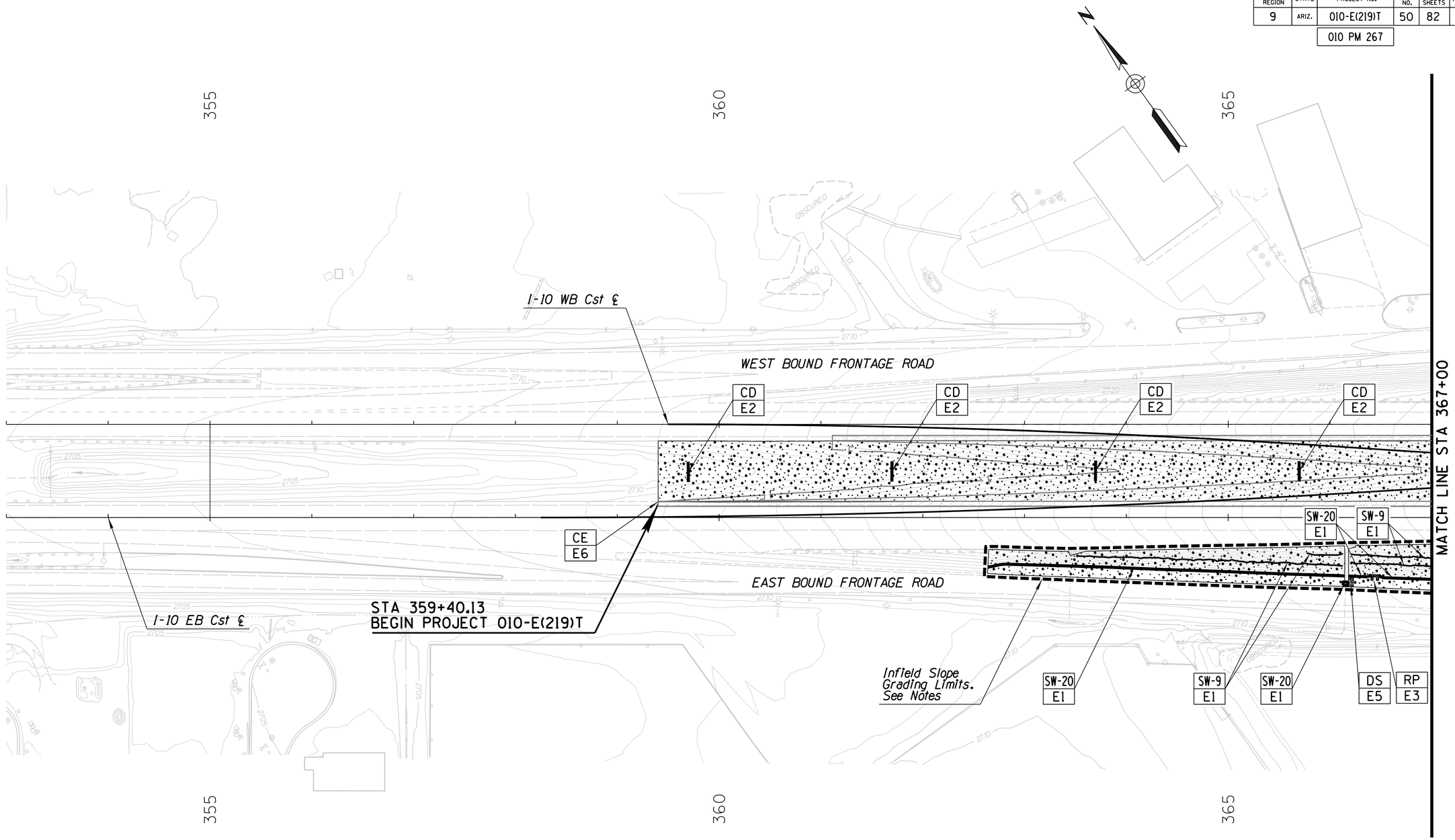

SYMBOL	DESCRIPTION	QUANTITY (ACRE)
	H1 - LOW GRASS & FORB MIX	1.5 AC

NOTES:

1. All Areas to be Seeded Shall be Treated for Noxious Weeds and Clear & Grubbed, See Item # 2010001.
2. The Infield Slope, Between the East Bound I-10 Mainline and the East Bound Frontage Road (Southwest Corner of I-10 and Craycroft), Shall be Reshaped and Graded, See Item # 2040001.

Erosion Control Method

CD
E3

SW-20 = Sediment Wattles- 20"
SW-9 = Sediment Wattles- 9"
CD = Check Dam
RP = Rock Protection
DS = Rock Mulch Drainage Swale
SD = Storm Drain Protection
CE = Construction Entrence

Detail Number Reference

	NAME	DATE
DESIGN	E NICHOLS	06/16
DRAWN	J WOTRING	06/16
CHECKED	D DEWITT	06/16

J2 Engineering and Environmental Design
4649 East Cotton Gin Loop, Suite B2
Phoenix, Arizona 85040
Phone: 602.438.2221
www.j2designus

ARIZONA DEPARTMENT OF TRANSPORTATION
INFRASTRUCTURE DELIVERY AND OPERATIONS DIVISION
ROADSIDE DEVELOPMENT SECTION

EROSION CONTROL PLAN
STA 359+40.13 TO STA 367+00

Registered Professional Engineer (Civil)
19210
DIRK D. DEWITT
Date Signed 06/17/16
ARIZONA, U.S.A.
Expires: 9/30/2017

ROUTE	LOCATION
I-10	CRAYCROFT RD TI OP STR #594 & #595

DWG NO. EC-3.01

TRACS NO. H8774 01C | 010-E(219)T | ___ OF ___

SURVEY NO. | FINISHED PLANS- | REVISIONS- | LOCATION- | DATE-

F.H.W.A. REGION	STATE	PROJECT NO.	SHEET NO.	TOTAL SHEETS	RECORD DRAWING
9	ARIZ.	010-E(219)T	51	82	

010 PM 267

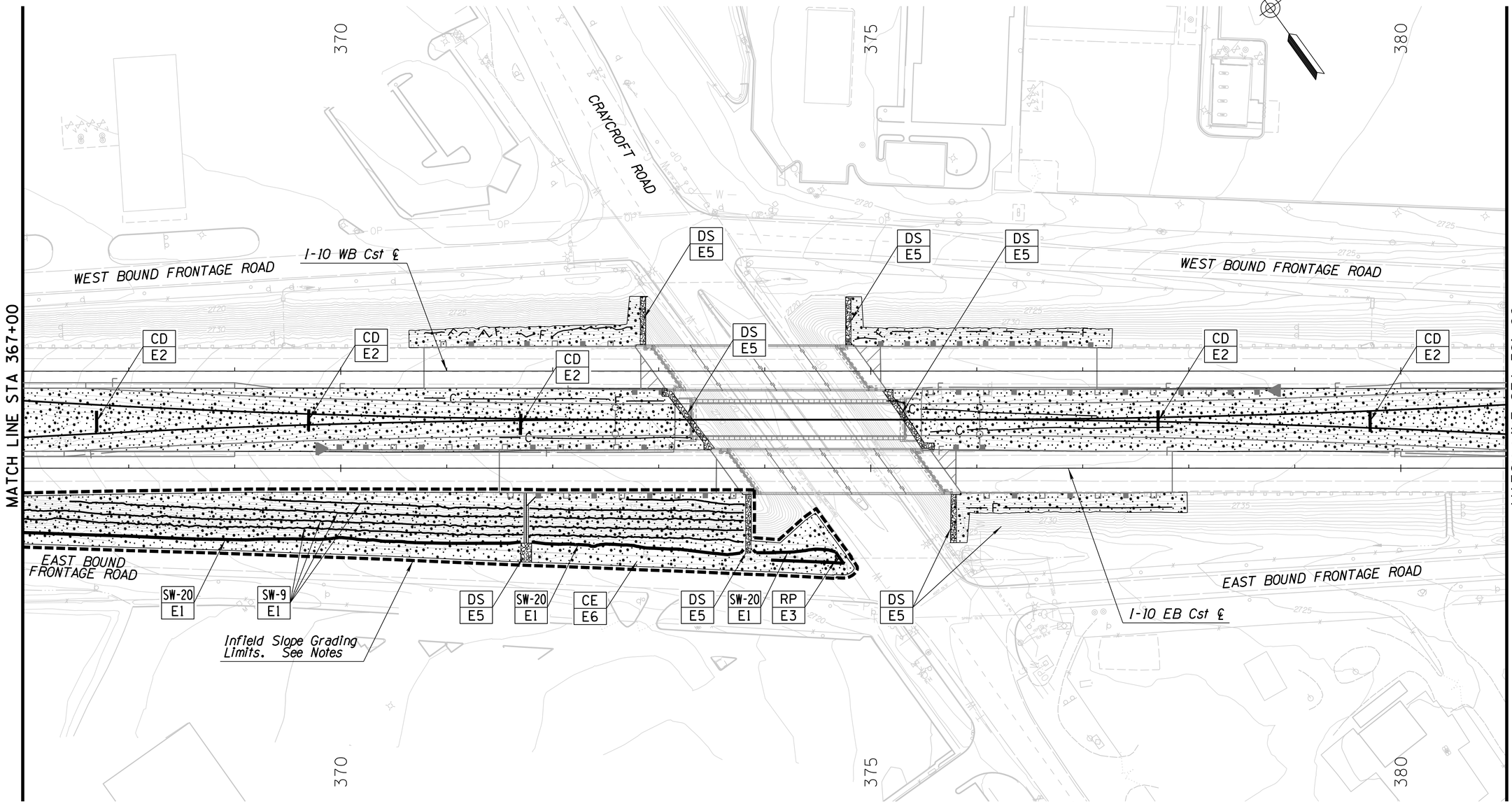

SYMBOL	DESCRIPTION	QUANTITY (ACRE)
	H1 - LOW GRASS & FORB MIX	3.1 AC

NOTES:

1. All Areas to be Seeded Shall be Treated for Noxious Weeds and Clear & Grubbed, See Item # 2010001.
2. The Infield Slope, Between the East Bound I-10 Mainline and the East Bound Frontage Road (Southwest Corner of I-10 and Craycroft), Shall be Reshaped and Graded, See Item # 2040001.

Erosion Control Method

CD
E3

SW-20 = Sediment Wattles- 20"
SW-9 = Sediment Wattles- 9"
CD = Check Dam
RP = Rock Protection
DS = Rock Mulch Drainage Swale
SD = Storm Drain Protection
CE = Construction Entrence

Detail Number Reference

	NAME	DATE
DESIGN	E NICHOLS	06/16
DRAWN	J WOTRING	06/16
CHECKED	D DEWITT	06/16

J2 Engineering and Environmental Design
4649 East Cotton Gin Loop, Suite B2
Phoenix, Arizona 85040
Phone: 602.438.2221
www.j2design.us

ARIZONA DEPARTMENT OF TRANSPORTATION
INFRASTRUCTURE DELIVERY AND OPERATIONS DIVISION
ROADSIDE DEVELOPMENT SECTION

EROSION CONTROL PLAN
STA 367+00 TO STA 381+00

Registered Landscape Architect
19210
DIRK D. DEWITT
Date Signed 06/16/16
ARIZONA, U.S.A.
Expires: 9/30/2017

ROUTE: I-10
LOCATION: CRAYCROFT RD TI OP STR #594 & #595

DWG NO. EC-3.02

TRACS NO. H8774 01C | 010-E(219)T | ___ OF ___

PRINTED BY: JWOTRING 6/16/2016 7:30:54 AM 6/16/2016 P:\140755\J2Cad\Sheets\H8774-EC-3.02.dgn

SURVEY NO. | FINISHED PLANS- | REVISIONS- | LOCATION- | DATE-

F.H.W.A. REGION	STATE	PROJECT NO.	SHEET NO.	TOTAL SHEETS	RECORD DRAWING
9	ARIZ.	010-E(219)T	52	82	

010 PM 267

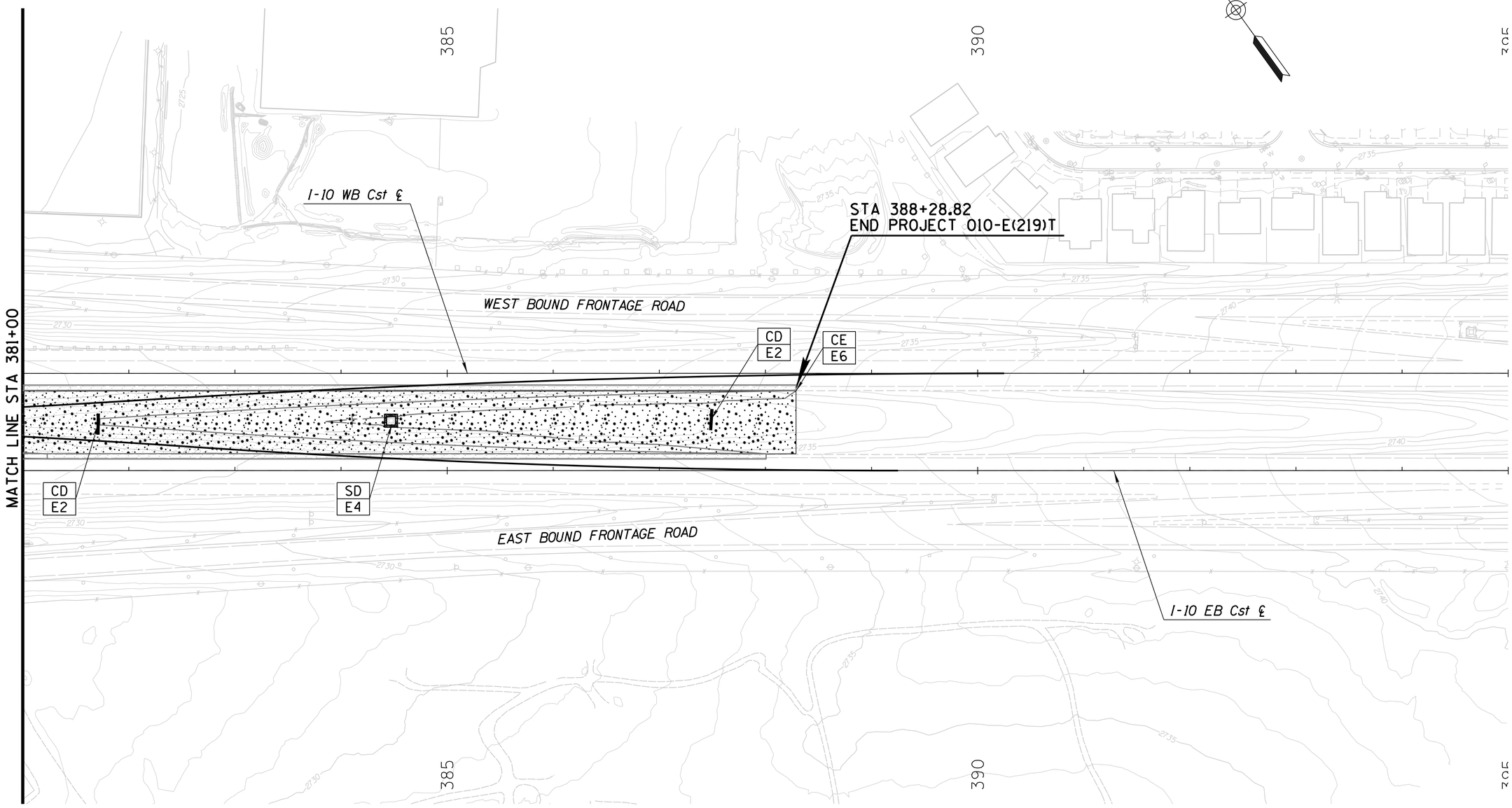

SYMBOL	DESCRIPTION	QUANTITY (ACRE)
	H1 - LOW GRASS & FORB MIX	1.3 AC

NOTES:

1. All Areas to be Seeded Shall be Treated for Noxious Weeds and Clear & Grubbed, See Item # 2010001.
2. The Infield Slope, Between the East Bound I-10 Mainline and the East Bound Frontage Road (Southwest Corner of I-10 and Craycroft), Shall be Reshaped and Graded, See Item # 2040001.

Erosion Control Method

CD
E3

SW-20 = Sediment Wattles- 20"
SW-9 = Sediment Wattles- 9"
CD = Check Dam
RP = Rock Protection
DS = Rock Mulch Drainage Swale
SD = Storm Drain Protection
CE = Construction Entrence

Detail Number Reference

	NAME	DATE
DESIGN	E NICHOLS	06/16
DRAWN	J WOTRING	06/16
CHECKED	D DEWITT	06/16

J2 Engineering and Environmental Design
4649 East Cotton Gin Loop, Suite B2
Phoenix, Arizona 85040
Phone: 602.438.2221
www.j2design.us

ARIZONA DEPARTMENT OF TRANSPORTATION
INFRASTRUCTURE DELIVERY AND OPERATIONS DIVISION
ROADSIDE DEVELOPMENT SECTION

EROSION CONTROL PLAN
STA 381+00 TO STA 388+28.82

Registered professional engineer
19210
DIRK D.
DEWITT
Date Signed 06/16/16
ARIZONA, U.S.A.
Expires: 9/30/2017

ROUTE	LOCATION
I-10	CRAYCROFT RD TI OP STR #594 & #595

DWG NO. EC-3.03

TRACS NO. H8774 01C | 010-E(219)T | ____ OF ____

SURVEY NO. | FINISHED PLANS- | REVISIONS- | LOCATION- | DATE-

TUCSON - BENSON HWY (I-10)
CRAYCROFT RD TI OP
PIMA COUNTY

F.H.W.A. REGION	STATE	PROJECT NO.	SHEET NO.	TOTAL SHEETS	RECORD DRAWING
9	ARIZ.	010-E(219)T	53	82	
		010 PM 267			

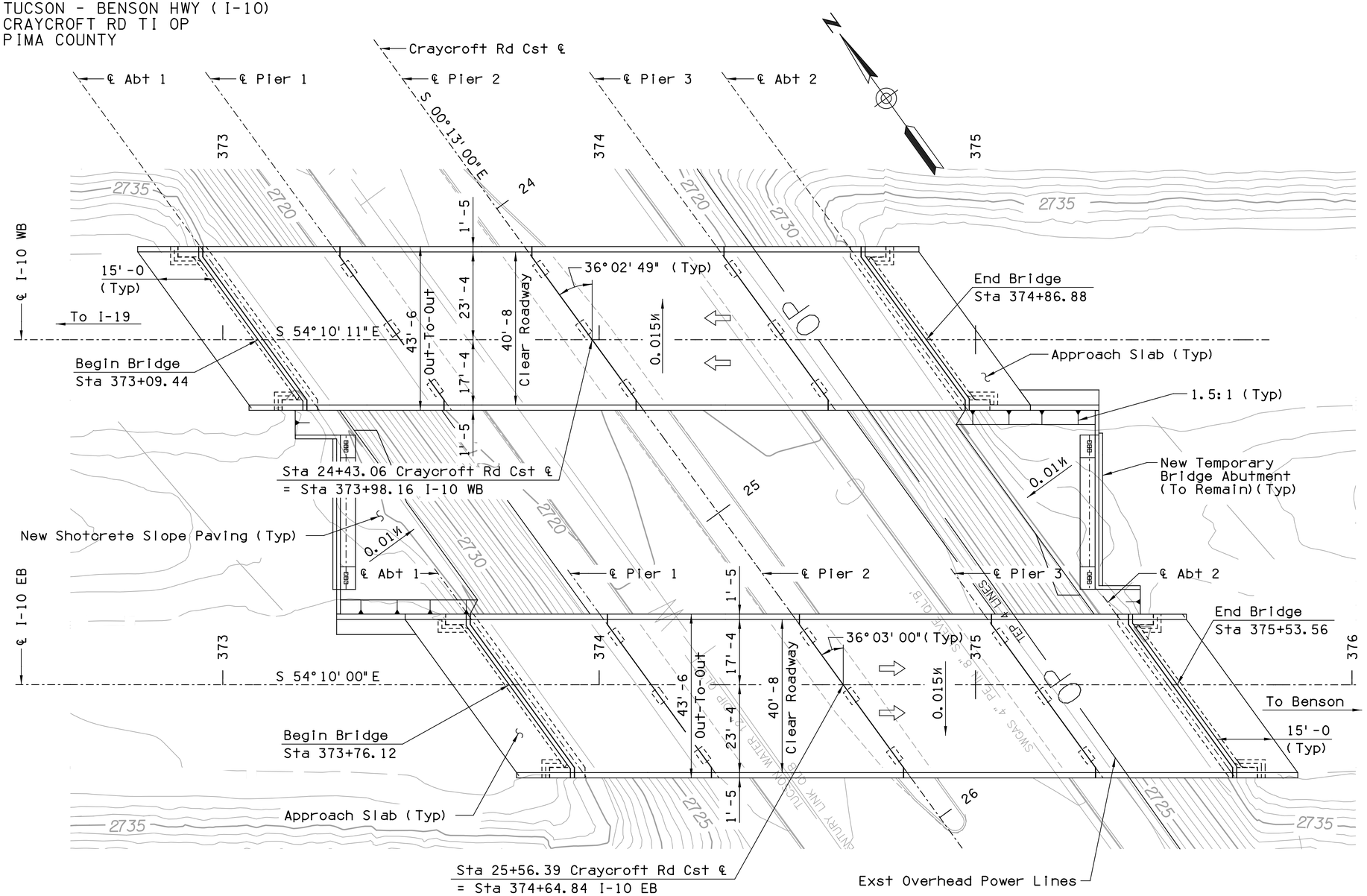

LOCATION PLAN

Existing 4-Span Prestressed AASHTO Type II Girder Bridges
Skew = 36°02'49" Lt WB
36°03'00" Lt EB
Scale: 1"=15'-0

NOTE:

The ℄ Abt and Pier labels are reversed for the WB bridge from that shown in the record drawings for Project No. I-10-5(12).

INDEX OF DRAWINGS

DWG NO	TITLE
S-1.01	GENERAL PLAN & INDEX
S-1.02	ELEVATION
S-1.03	TYPICAL SECTION
S-1.04	GENERAL NOTES & QUANTITIES
S-1.05	REMOVAL DETAILS 1
S-1.06	REMOVAL DETAILS 2
S-1.07	ABUTMENT PLAN & ELEVATION
S-1.08	ABUTMENT DETAILS
S-1.09	GIRDER DETAILS 1
S-1.10	GIRDER DETAILS 2
S-1.11	DIAPHRAGM DETAILS 1
S-1.12	DIAPHRAGM DETAILS 2
S-1.13	DECK PLAN
S-1.14	DECK TYPICAL SECTION
S-1.15	EXPANSION JOINT DETAILS
S-1.16	MISCELLANEOUS DETAILS
S-1.17	GIRDER DEFLECTIONS
S-1.18	WB SCREED ELEVATIONS
S-1.19	EB SCREED ELEVATIONS
S-1.20	TEMPORARY BRIDGE GENERAL PLAN
S-1.21	TEMPORARY BRIDGE ELEVATION
S-1.22	TEMP BRIDGE TYPICAL SECTION
S-1.23	TEMP BRIDGE FOUNDATION PLAN
S-1.24	TEMPORARY BRIDGE ABT PLAN
S-1.25	TEMPORARY BRIDGE ABT ELEVATION
S-1.26	TEMP BRIDGE ABUTMENT DETAILS 1
S-1.27	TEMP BRIDGE ABUTMENT DETAILS 2
S-1.28	TEMP BRIDGE WINGWALL DETAILS
SF-1.01	FOUNDATION DATA SHEET 1
SF-1.02	FOUNDATION DATA SHEET 2

LEGEND:

DETAIL Marker — 1 / 1.01 — Detail Number / Drawing Number

SECTION Marker — A / 1.01 — Section Letter / Drawing Number

NOTE:

A line (——) in place of the Drawing Number indicates that the SECTION or DETAIL is located on the same Drawing that the SECTION or DETAIL is cut.

Original bridges constructed by Arizona Highway Department in 1960 under Project No. I-10-5(12).

Barriers modified by Arizona Department of Transportation in 1977 under Project I-10-5(40).

	NAME	DATE
DESIGN	CLM/ZU	06/16
DRAWN	AJM	06/16
CHECKED	JRP	06/16

T.Y. LIN INTERNATIONAL
engineers | planners | scientists
60 E. Rio Salado Parkway, Suite 501
Tempe, Arizona 85281, Tel: 480-968-8814

ARIZONA DEPARTMENT OF TRANSPORTATION
INFRASTRUCTURE DELIVERY AND OPERATIONS DIVISION
BRIDGE GROUP

Sta 373 +
CRAYCROFT RD TI OP EB & WB
GENERAL PLAN & INDEX

I-10	268.08	594 EB 595 WB
ROUTE	MILEPOST	STRUCTURE NO.

LOCATION: CRAYCROFT RD TI OP STR #594 & #595

Registered Professional Engineer (Civil) CERTIFICATE NO. 10970 JAMES R. PYNE Date Signed 06/10/16 ARIZONA, U.S.A.
Expires 12/31/2018

DWG. S-1. 01 OF 28

TRACS NO. H 8774 01 C | 010-E(219)T | ___ OF ___

Workspace: H:\ustation\projects\221867.00 Craycroft - V8\mdl.pcf | Plot Driver: H:\ustation\plotcfg\ADOT_PDF_FULL.plt | Pentable: H:\ustation\plotcfg\pen\stdplot.tbl
SURVEY NO. | FINISHED PLANS- | REVISIONS- | LOCATION- | DATE-

amacias 1:29:37 PM 6/16/2016 T:\Tempe\Projects\221867.00\600_CADD\05_Official\Delv Files\Structures\Craycroft\Sealed Submittal\01s594gp.dgn

F.H.W.A. REGION	STATE	PROJECT NO.	SHEET NO.	TOTAL SHEETS	RECORD DRAWING
9	ARIZ.	010-E(219)T	54	82	
		010 PM 267			

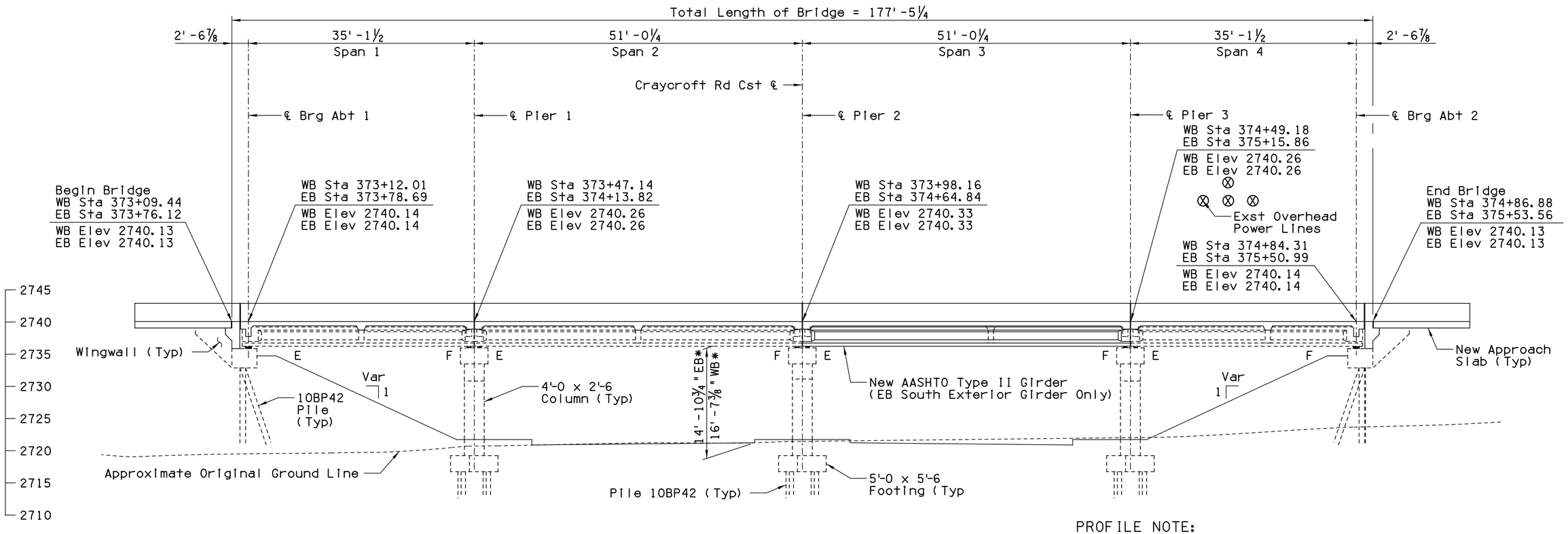

* Measurement from Bridge Inspection Report

SECTION @ ℄ I-10 EB & WB

Scale: ⅛"=1'-0

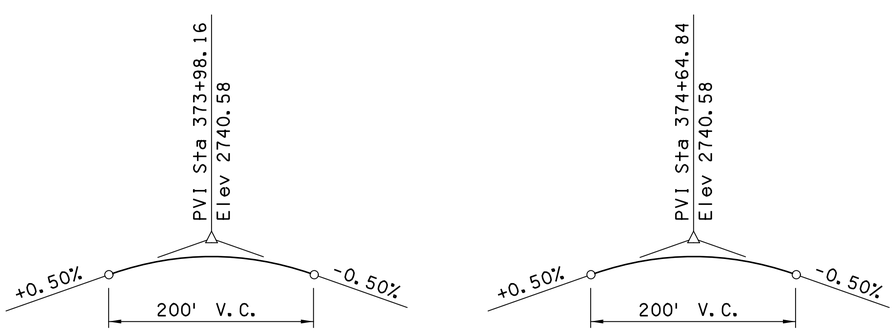

WB PGL

EB PGL

SURVEY DATA:

Aerial survey performed by ADOT on 6-9-14, 6-10-14 and 8-6-14. Supplemental survey performed on 3-15-16 by ADOT.

PROFILE NOTE:

The RECORD PLANS elevations for existing features have been adjusted by +1.83 feet as a best fit to survey data. The contractor shall field verify existing elevations.

Elevations for deck, approach slab and backwall are based on profiles shown on this sheet that reflect the datum shift and a grade raise of 4.5 inch.

STATION NOTE:

The RECORD PLANS stations for existing features have been adjusted by -3.63 feet EB and -3.36 feet WB as a best fit to survey data. The contractor shall field verify existing stations.

	NAME	DATE
DESIGN	CLM/ZU	06/16
DRAWN	AJM	06/16
CHECKED	JRP	06/16

T·Y·LIN INTERNATIONAL
engineers | planners | scientists
60 E. Rio Salado Parkway, Suite 501
Tempe, Arizona 85281, Tel. 480-968-8814

ARIZONA DEPARTMENT OF TRANSPORTATION
INFRASTRUCTURE DELIVERY AND OPERATIONS DIVISION
BRIDGE GROUP

Sta 373 +
CRAYCROFT RD TI OP EB & WB
ELEVATION

I-10	268.08	594 EB 595 WB
ROUTE	MILEPOST	STRUCTURE NO.

LOCATION: CRAYCROFT RD TI OP STR #594 & #595

Registered Professional Engineer (Civil) CERTIFICATE NO. 10870 JAMES R. PYNE Date Signed 06/16/16 ARIZONA, U.S.A. Expires 12/31/2018

DWG. S-1. 02 OF 28

TRACS NO. H 8774 01 C | 010-E(219)T | ___ OF ___

amacias 12:52:04 PM 6/16/2016 T:\Tempe\Projects\221867.00\600_CADD\05_Official\Delv Files\Structures\Craycroft\Sealed Submittal\02s594el.dgn

Workspace: H:\ustation\projects\221867.00 Craycroft - Willmot.pcf | SURVEY NO. | FINISHED PLANS- | REVISIONS- | Plot Driver: H:\ustation\dotcfg\ADOT_PDF_FULL.plt | LOCATION- | DATE- | Printable: H:\ustation\dotcfg\open\stdplot.tbl | SURVEY NO. | FINISHED PLANS- | REVISIONS- | LOCATION- | DATE-

F.H.W.A. REGION	STATE	PROJECT NO.	SHEET NO.	TOTAL SHEETS	RECORD DRAWING
9	ARIZ.	010-E(219)T	55	82	

010 PM 267

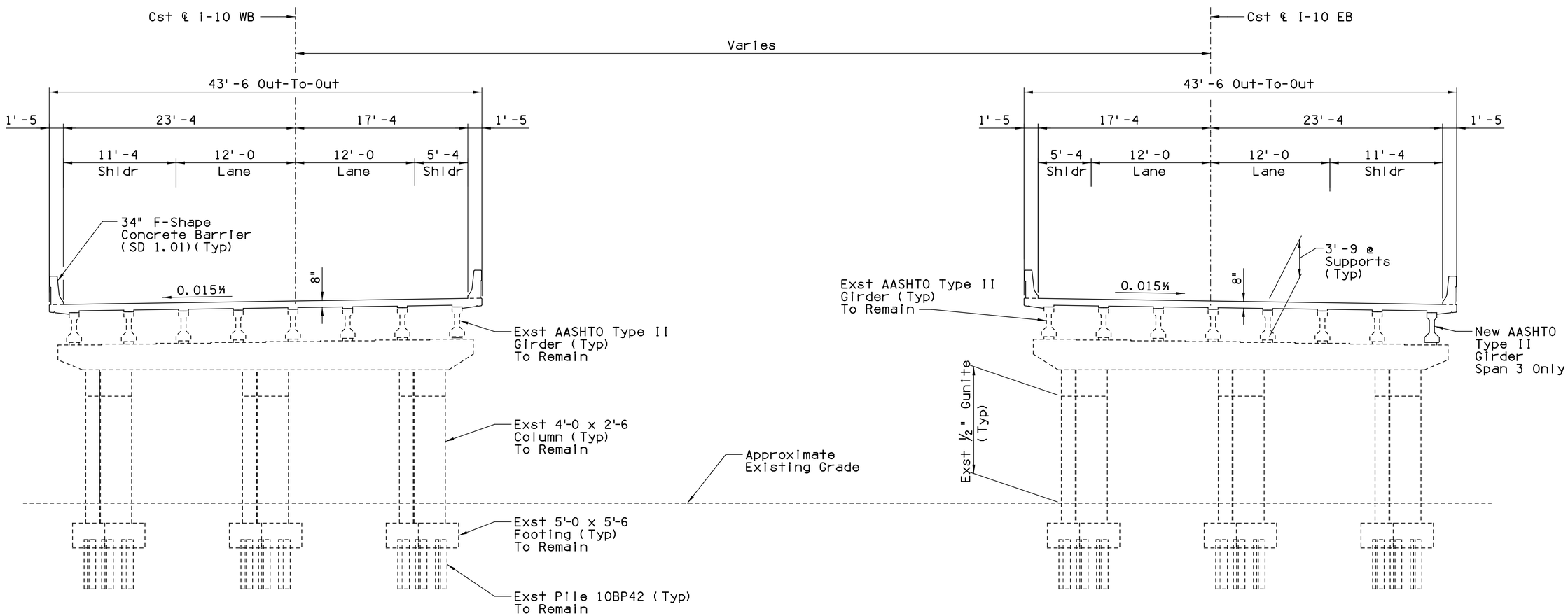

TYPICAL SECTION

Scale: 3/16" = 1'-0

	NAME	DATE
DESIGN	CLM/ZU	06/16
DRAWN	AJM	06/16
CHECKED	JRP	06/16

T.Y. LIN INTERNATIONAL
engineers | planners | scientists
60 E. Rio Salado Parkway, Suite 501
Tempe, Arizona 85281, Tel. 480-968-8814

ARIZONA DEPARTMENT OF TRANSPORTATION
INFRASTRUCTURE DELIVERY AND OPERATIONS DIVISION
BRIDGE GROUP

Sta 373 +
CRAYCROFT RD TI OP EB & WB
TYPICAL SECTION

LOCATION: CRAYCROFT RD TI OP
STR #594 & #595

I-10	268.08	594 EB 595 WB
ROUTE	MILEPOST	STRUCTURE NO.

Registered Professional Engineer (Civil)
CERTIFICATE NO. 10970
JAMES R. PYHE
Date Signed 12/31/15
ARIZONA, U.S.A.
Expires 12/31/2018

DWG. S-1. 03 OF 28

TRACS NO. H 8774 01 C | 010-E(219)T | ___ OF ___

Workspace: H:\ustation\projects\221867.00 Craycroft - Wilmot.pcf | Plot Driver: H:\ustation\plotcfg\ADOT_PDF_FULL.pll | Pentable: H:\ustation\plotcfg\pen\stdplot.tbl
SURVEY NO. | FINISHED PLANS- | REVISIONS- | LOCATION- | DATE-

amacias 12:53:11 PM 6/16/2016 T:\Tempe\Projects\221867.00\600_CADD\05_Official\Delv Files\Structures\Craycroft\Sealed Submittal\03s594xs.dgn

F.H.W.A. REGION	STATE	PROJECT NO.	SHEET NO.	TOTAL SHEETS	RECORD DRAWING
9	ARIZ.	010-E(219)T	56	82	

010 PM 267

APPROXIMATE QUANTITIES

CRAYCROFT RD TI OP WB

Removal of Structural Concrete.....298 CY
Structural Excavation.....20 CY
Structure Backfill.....20 CY
Structural Concrete (Class S) (f'c=3,500).....16 CY
Structural Concrete (Class S) (f'c=4,500).....204 CY
F-Shape Bridge Concrete Barrier and Transition (34")...415 LF
Deck Joint Assembly (Strip Seal).....248 LF
Approach Slab.....1,305 SF
Reinforcing Steel.....57,065 LB
Place Dowels.....36 EA
Thrie-Beam Guard Rail Transition System.....4 EA
Junction Box Type II.....8 EA

CRAYCROFT RD TI OP EB

Removal of Structural Concrete.....304 CY
Structural Excavation.....20 CY
Structure Backfill.....20 CY
Structural Concrete (Class S) (f'c=3,500).....17 CY
Structural Concrete (Class S) (f'c=4,500).....204 CY
F-Shape Bridge Concrete Barrier and Transition (34")...415 LF
Deck Joint Assembly (Strip Seal).....248 LF
Approach Slab.....1,305 SF
Precast, P/S Member (AASHTO Type 2 Girder).....51 LF
Reinforcing Steel.....57,190 LB
Place Dowels.....36 EA
Thrie-Beam Guard Rail Transition System.....4 EA
Junction Box Type II.....8 EA

TEMPORARY BRIDGE

Miscellaneous Work (Temporary Bridge) .....1 L.Sum
Structural Excavation.....450 CY
Structural Backfill.....75 CY
Structural Concrete (Class S f'c=3,500psi).....150 CY
Approach Slab.....1,120 SF
Reinforcing Steel.....19,520 LB
Removal Slope Paving.....172 SY
Slope Paving.....237 SY
Lean Concrete (Min f'c=500psi).....95 CY
Miscellaneous Work (Epoxy Aggregate Coated Deck).....734 SY

NOTES:

1. Removal of existing thrie beam transition is included in Removal of Structural Concrete.
2. Removal of dado's, wingwalls, abutment backwalls, approach slabs, deck, diaphragms and barriers is included in the Removal of Structural Concrete.
3. Painting of New AASHTO Girder Anchor System is included in the Precast, P/S Member (AASHTO Type 2 Girder).

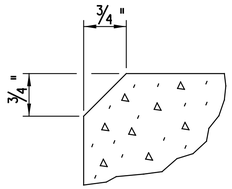

CHAMFER DETAIL

GENERAL NOTES:

Construction Specification - Arizona Department of Transportation, Standard Specifications for Road and Bridge Construction, Edition of 2008.

Design Specification - AASHTO LRFD Bridge Design Specifications, 7th Edition 2014.

Dead Load - Does not include allowance of 25 pounds per square foot for future wearing surface.

Loading Class - HL-93.

The bridge site is classified as site Class D with Peak Ground Acceleration (PGA) = 0.072g and horizontal response spectral acceleration coefficient at 0.2 sec return period (S_S) of 0.167g and horizontal response spectral acceleration coefficient at 1.0 sec return period (S1) of 0.048g. The bridge site is classified as seismic zone 1.

Inventory and operating ratings for HL-93 are in accordance with AASHTO Manual for Bridge Evaluation and Load and Resistance Factor Rating (LRFD) of Highway Bridges, 2nd Edition, with 2011, 2013, 2014 and 2015 Interim Revision.

Existing Girder Inventory Rating RF = 1.50
Existing Girder Operating Rating RF = 1.94
New Girder Inventory Rating RF = 1.55
New Girder Operating Rating RF = 2.01

All concrete shall be Class "S" unless noted otherwise.

Reinforcing steel shall conform to ASTM Specification A615 except reinforcing to be welded shall conform to ASTM A706. All reinforcing shall be furnished as Grade 60.

All bends and hooks shall meet the requirements of AASHTO Article 5.10.2 unless noted otherwise. All bend dimensions for reinforcing steel shall be out-to-out of bars. All placement dimensions for reinforcing steel shall be to center of bars unless noted otherwise.

All reinforcing steel shall have 2 inch clear cover unless noted otherwise.

Stresses:

Deck	f'c =	4.5 ksi
Bridge Barrier & Appr Slab	f'c =	4.0 ksi
Abutments	f'c =	3.5 ksi
Other Class "S" concrete	f'c =	3.0 ksi
Grade 60 transverse deck reinf	fs =	24.0 ksi
All other Grade 60	fy =	60.0 ksi

Barriers shall not be slip formed.

Chamfer all exposed corners 3/4" per Chamfer Detail unless noted otherwise.

Dimensions shall not be scaled from drawings.

STRUCTURE DETAIL DRAWINGS:

SD 1.01, SD 1.03, SD 1.11, SD 2.01, SD 3.02, SD 5.01 & SD 5.02.

	NAME	DATE
DESIGN	CLM/ZU	06/16
DRAWN	AJM	06/16
CHECKED	JRP	06/16

T.Y. LIN INTERNATIONAL
engineers | planners | scientists
60 E. Rio Salado Parkway, Suite 501
Tempe, Arizona 85281, Tel. 480-968-8814

ARIZONA DEPARTMENT OF TRANSPORTATION
INFRASTRUCTURE DELIVERY AND OPERATIONS DIVISION
BRIDGE GROUP

Sta 373 +
CRAYCROFT RD TI OP EB & WB
GENERAL NOTES & QUANTITIES

ROUTE	MILEPOST	STRUCTURE NO.	LOCATION
I-10	268.08	594 EB 595 WB	CRAYCROFT RD TI OP STR #594 & #595

Registered Professional Engineer (Civil) CERTIFICATE NO. 10970 JAMES R. PYNE Date Signed 06/10/16 ARIZONA, U.S.A. Expires 12/31/2018

DWG. S-1. 04 OF 28

TRACS NO. H 8774 01 C | 010-E(219)T | ___ OF ___

Workspace: H:\ustation\projects\221867.00 Craycroft - Willmot.pcf | Plot Driver: H:\ustation\plotcfg\ADOT_PDF_FULL.plt | Pentable: H:\ustation\plotcfg\pen\stdplot.tbl
SURVEY NO. | FINISHED PLANS- | REVISIONS- | LOCATION- | DATE-

amacias 12:53:39 PM 6/16/2016 T:\Tempe\Projects\221867.00\600_CADD\05_Official\Delv Files\Structures\Craycroft\Sealed Submittal\04s594nq.dgn

F.H.W.A. REGION	STATE	PROJECT NO.	SHEET NO.	TOTAL SHEETS	RECORD DRAWING
9	ARIZ.	010-E(219)T	57	82	

010 PM 267

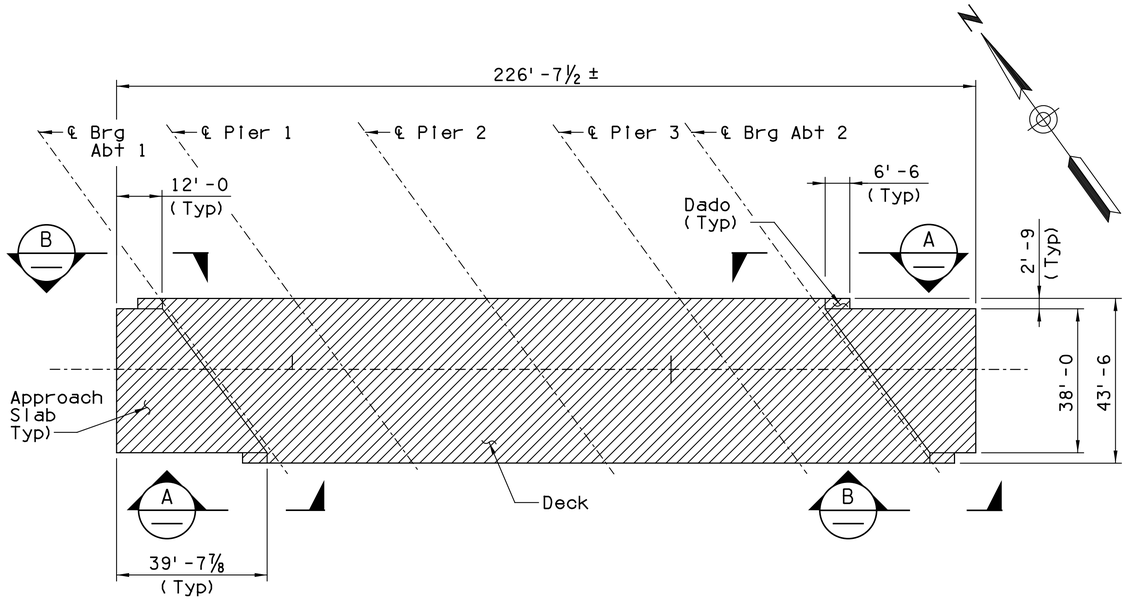

DECK & APPROACH SLAB REMOVAL PLAN

(EB SHOWN, WB SIMILAR)

Scale: 1"=20'-0

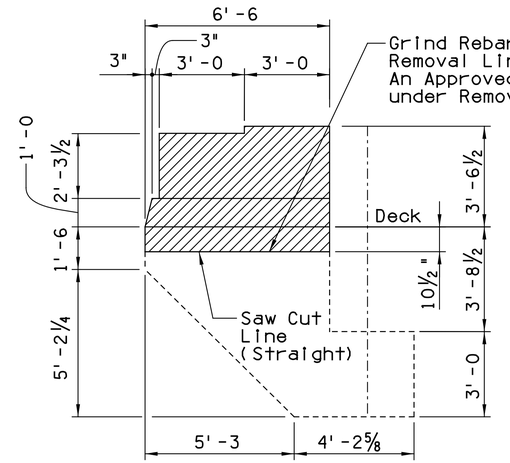

WINGWALL ELEVATION (A)

Scale: ⅜"=1'-0

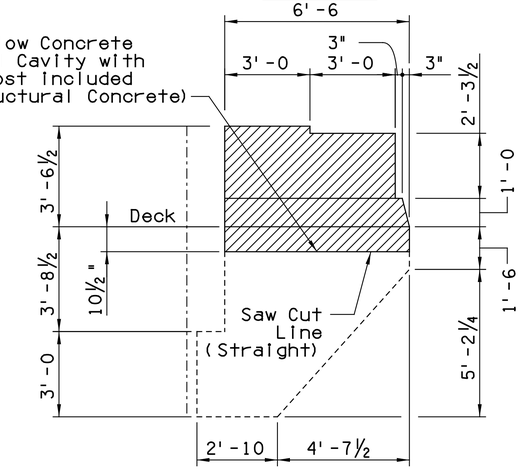

WINGWALL ELEVATION (B)

Scale: ⅜"=1'-0

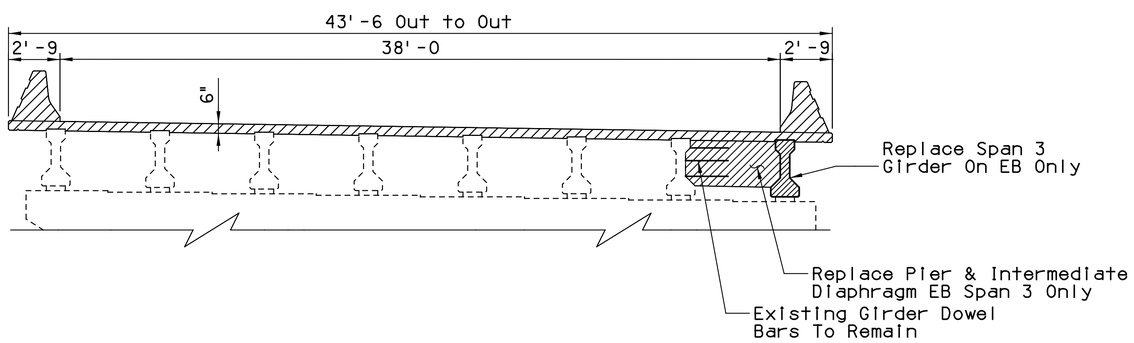

REMOVAL TYPICAL SECTION

(EB SHOWN, WB SIMILAR)

Scale: ¼"=1'-0

NOTES:

1. ▨ Denotes removal.
2. Remove deck, barrier, dados, approach slabs, abutment backwalls and part of wingwalls. Paid under Removal of Structural Concrete.
3. When removing existing deck care must be taken to prevent damage to existing vertical reinforcing at top of each girder and diaphragm.
4. See record plans for existing reinf. not shown for clarity.
5. In addition to the requirements of Section 202-3.05 of the Standard Specifications, at least ten days before beginning any bridge removal operations either wholly or in part, the contractor shall submit to the Engineer for review and approval, details of the proposed removal operations showing the methods and sequence of removal and equipment to be used.

	NAME	DATE
DESIGN	CLM/ZU	06/16
DRAWN	AJM	06/16
CHECKED	JRP	06/16

T·Y·LIN INTERNATIONAL
engineers | planners | scientists
60 E. Rio Salado Parkway, Suite 501
Tempe, Arizona 85281, Tel. 480-968-8814

ARIZONA DEPARTMENT OF TRANSPORTATION
INFRASTRUCTURE DELIVERY AND OPERATIONS DIVISION
BRIDGE GROUP

Sta 373 +
CRAYCROFT RD TI OP EB & WB
REMOVAL DETAILS 1

I-10	268.08	594 EB 595 WB
ROUTE	MILEPOST	STRUCTURE NO.

LOCATION: CRAYCROFT RD TI OP STR #594 & #595

Registered Professional Engineer (Structural) CERTIFICATE NO. 10970 JAMES R. PYNE Date Signed 06/16/16 ARIZONA, U.S.A.
Expires 12/31/2018

DWG. S-1. 05 OF 28

TRACS NO. H 8774 01 C | 010-E(219)T | ___ OF ___

Workspace: H:\ustation\projects\221867.00 Craycroft - Willmot.pcf | Plot Driver: H:\ustation\plotcfg\ADOT_PDF_FULL.pll | Pentable: H:\ustation\plotcfg\pen\stdplot.tbl
SURVEY NO. | FINISHED PLANS- | REVISIONS- | LOCATION- | DATE-

amacias 12:54:30 PM 6/16/2016 T:\Tempe\Projects\221867.00\600_CADD\05_Official\Delv Files\Structures\Craycroft\Sealed Submittal\05s594br1.dgn

F.H.W.A. REGION	STATE	PROJECT NO.	SHEET NO.	TOTAL SHEETS	RECORD DRAWING
9	ARIZ.	010-E(219)T	58	82	
		010 PM 267			

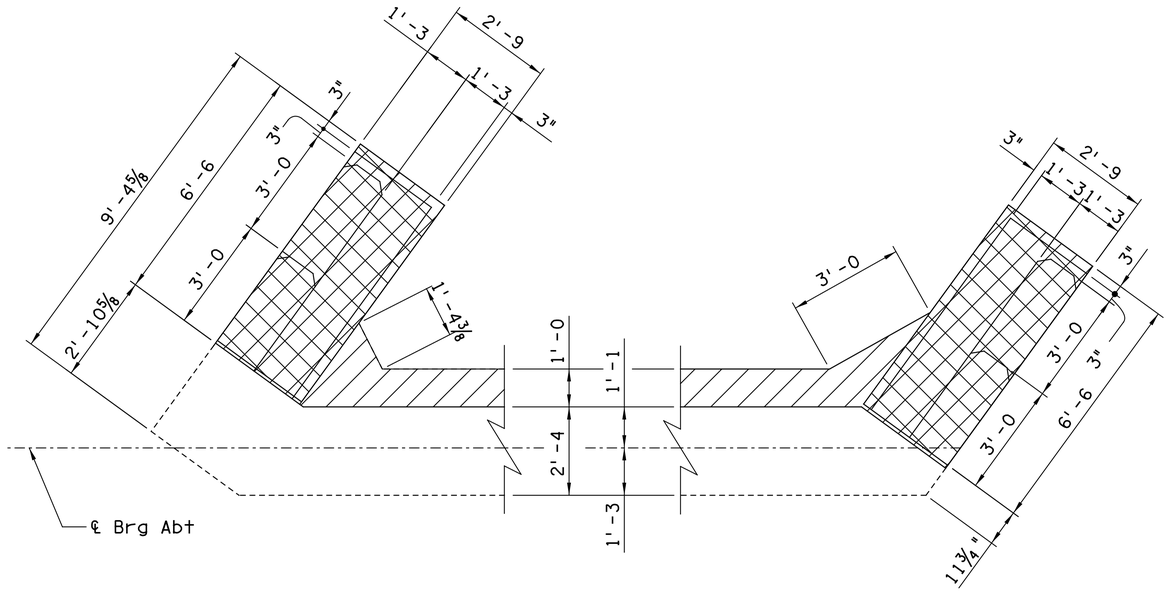

TYPICAL PARTIAL ABUTMENT REMOVAL PLAN

Scale: 1/2" = 1'-0

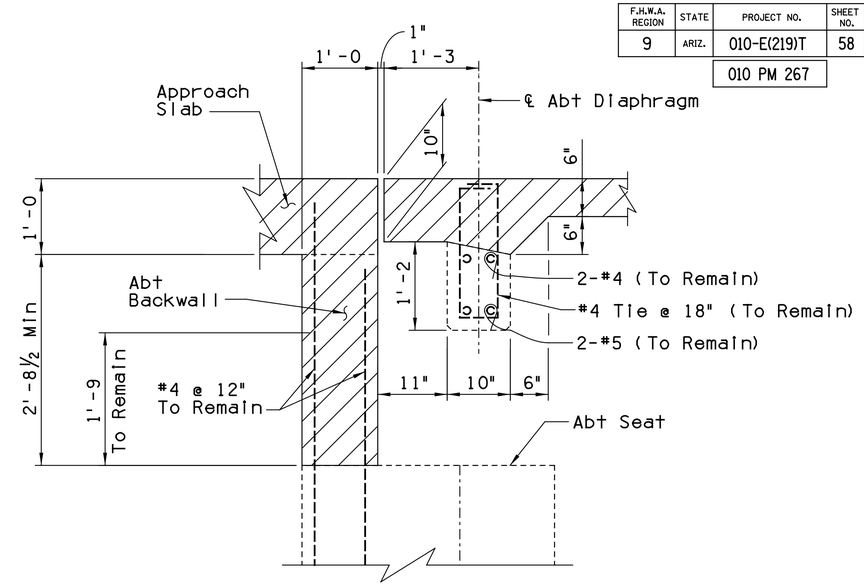

TYPICAL ABUTMENT DIAPHRAGM REMOVAL

Scale: 1" = 1'-0

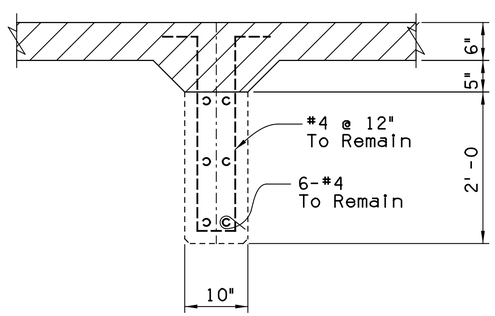

TYPICAL INTERMEDIATE DIAPHRAGM REMOVAL

Scale: 1/2" = 1'-0

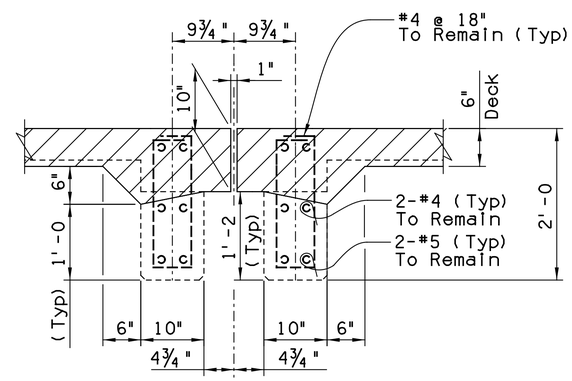

TYPICAL PIER DIAPHRAGM REMOVAL

Scale: 1" = 1'-0

LEGEND:

Concrete removal

Remove to depth 10 1/2" below deck

NOTES:

1. For Span 3 of the EB bridge, remove entire Southern most intermediate exterior diaphragm.
2. Protect existing embedded reinforcing.

NOTES:

1. For Span 3 of the EB bridge, remove entire Southern most exterior diaphragm at Pier 2 and Pier 3.
2. Protect existing embedded reinforcing.

	NAME	DATE
DESIGN	CLM/ZU	06/16
DRAWN	AJM	06/16
CHECKED	JRP	06/16

T.Y. LIN INTERNATIONAL
engineers | planners | scientists
60 E. Rio Salado Parkway, Suite 501
Tempe, Arizona 85281, Tel. 480-968-8814

ARIZONA DEPARTMENT OF TRANSPORTATION
INFRASTRUCTURE DELIVERY AND OPERATIONS DIVISION
BRIDGE GROUP

Sta 373 +
CRAYCROFT RD TI OP EB & WB
REMOVAL DETAILS 2

I-10	268.08	594 EB 595 WB
ROUTE	MILEPOST	STRUCTURE NO.

LOCATION: CRAYCROFT RD TI OP STR #594 & #595

TRACS NO. H 8774 01 C | 010-E(219)T

Registered Professional Engineer (Civil) CERTIFICATE NO. 10970 JAMES R. PYNE Date Signed 06/16/16 ARIZONA, U.S.A. Expires 12/31/2018

DWG. S-1. 06 OF 28

___ OF ___

Workspace: H:\ustation\projects\221867.00 Craycroft - Willmot.pcf | Plot Driver: H:\ustation\plotcfg\ADOT_PDF_FULL.plt | Pentable: H:\ustation\plotcfg\pen\stdplot.tbl
SURVEY NO. | FINISHED PLANS- | REVISIONS- | LOCATION- | DATE-

F.H.W.A. REGION	STATE	PROJECT NO.	SHEET NO.	TOTAL SHEETS	RECORD DRAWING
9	ARIZ.	010-E(219)T	59	82	
		010 PM 267			

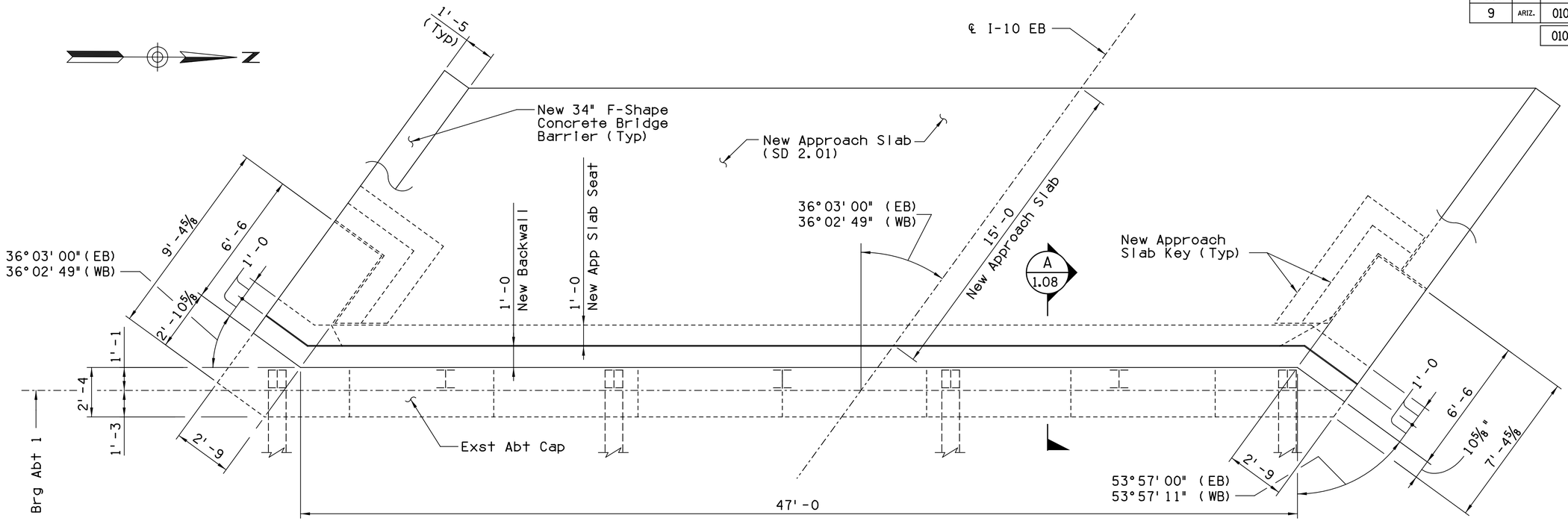

ABUTMENT PLAN

(Abt 1 Shown, Looking Back)
(Abt 2, Looking Ahead)
Scale: ⅛"=1'-0

WB Abutment Elevations			
Location	Label	Abt 1 Elev	Abt 2 Elev
24.75' Rt	A	2739.69	2739.83
22.00 Rt	B	2739.73	2739.87
Cst ℄	C	2740.14	2740.14
16.00 Lt	D	2740.43	2740.32
18.75 Lt	E	2740.47	2740.37
Rt Seat	F	2736.35	2736.24
Lt Seat	G	2735.65	2735.79

NOTE: Elevations F and G are Elevations from Record Drawings adjusted by +1.83 feet.

EB Abutment Elevations			
Location	Label	Abt 1 Elev	Abt 2 Elev
24.75' Rt	A	2740.37	2740.47
22.00 Rt	B	2740.32	2740.43
Cst ℄	C	2740.14	2740.14
16.00 Lt	D	2739.87	2739.73
18.75 Lt	E	2739.83	2739.69
Rt Seat	F	2735.79	2735.65
Lt Seat	G	2736.24	2736.35

NOTE: Elevations F and G are Elevations from Record Drawings adjusted by +1.83 feet.

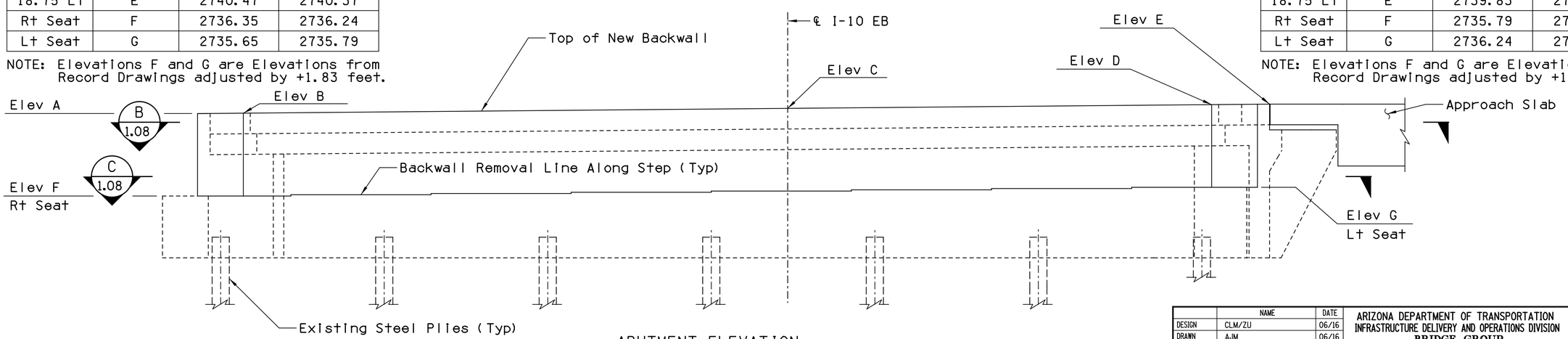

ABUTMENT ELEVATION

(EB Abt 1 Shown, EB Abt 2 Opp)
(WB Abt 1 & WB Abt 2 Sim)
Scale: ⅛"=1'-0

	NAME	DATE
DESIGN	CLM/ZU	06/16
DRAWN	AJM	06/16
CHECKED	JRP	06/16

T·Y·LIN INTERNATIONAL
engineers | planners | scientists
60 E. Rio Salado Parkway, Suite 501
Tempe, Arizona 85281, Tel. 480-968-8814

ARIZONA DEPARTMENT OF TRANSPORTATION
INFRASTRUCTURE DELIVERY AND OPERATIONS DIVISION
BRIDGE GROUP

Sta 373 +
CRAYCROFT RD TI OP EB & WB
ABUTMENT PLAN & ELEVATION

I-10	268.08	594 EB 595 WB
ROUTE	MILEPOST	STRUCTURE NO.

LOCATION: CRAYCROFT RD TI OP STR #594 & #595

Registered Professional Engineer (Civil) CERTIFICATE NO. 10970 JAMES R. PYNE Date Signed 06/16/16 ARIZONA, U.S.A. Expires 12/31/2018

DWG. S-1. 07 OF 28

TRACS NO. H 8774 01 C | 010-E(219)T | ___ OF ___

amacias 12:55:29 PM 6/16/2016 T:\Tempe\Projects\221867.00\600_CADD\05_Official\Delv Files\Structures\Craycroft\Sealed Submittal\07s594ab.dgn

Workspace: H:\ustation\projects\221867.00 Craycroft - Willmot.pcf | Plot Driver: H:\ustation\plotcfg\ADOT_PDF_FULL.plt | Pentable: H:\ustation\plotcfg\pen\stdplot.tbl
SURVEY NO. | FINISHED PLANS- | REVISIONS- | LOCATION- | DATE-

F.H.W.A. REGION	STATE	PROJECT NO.	SHEET NO.	TOTAL SHEETS	RECORD DRAWING
9	ARIZ.	010-E(219)T	60	82	

010 PM 267

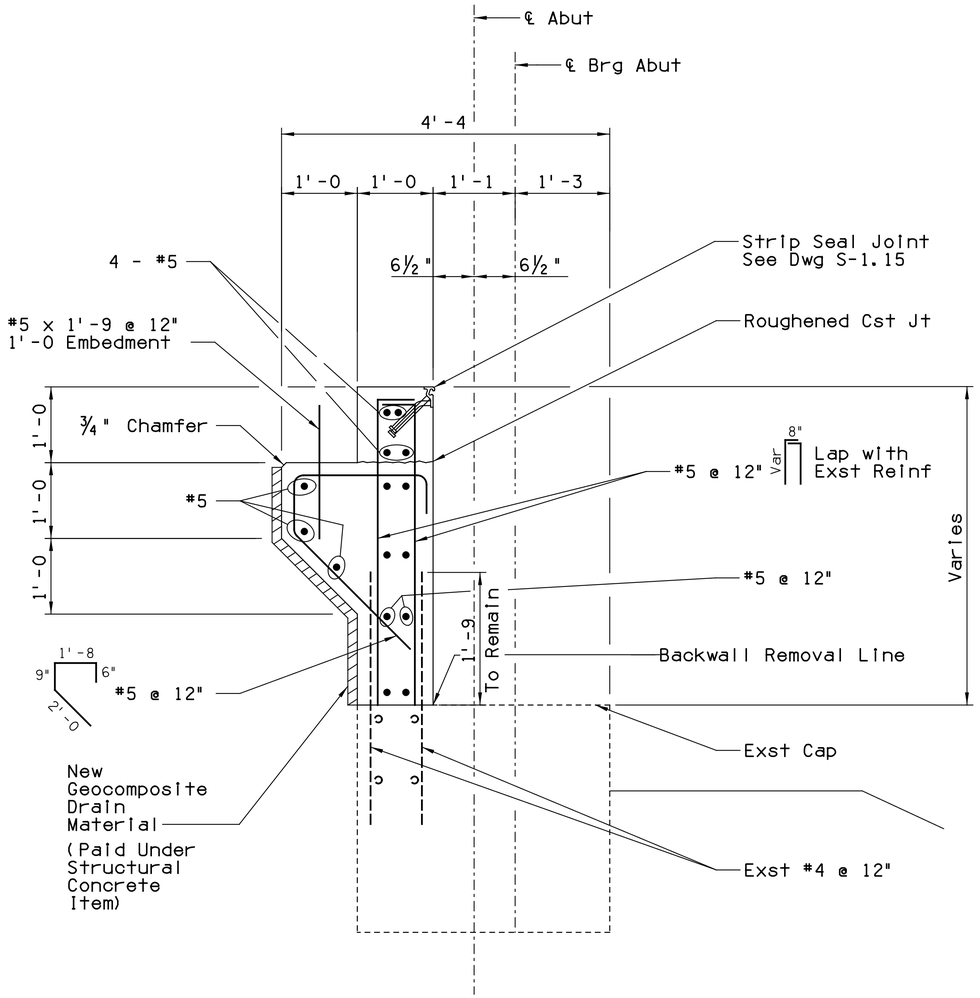

TYPICAL ABUTMENT BACKWALL DETAIL

SECTION A 1.07
Scale: 1" = 1'-0

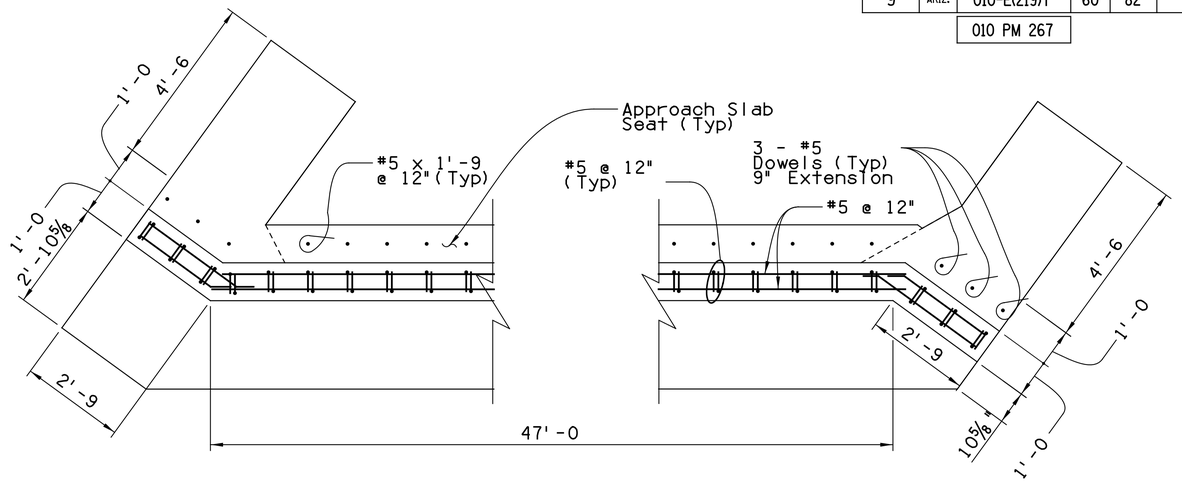

SECTION B 1.07
Scale: ½" = 1'-0

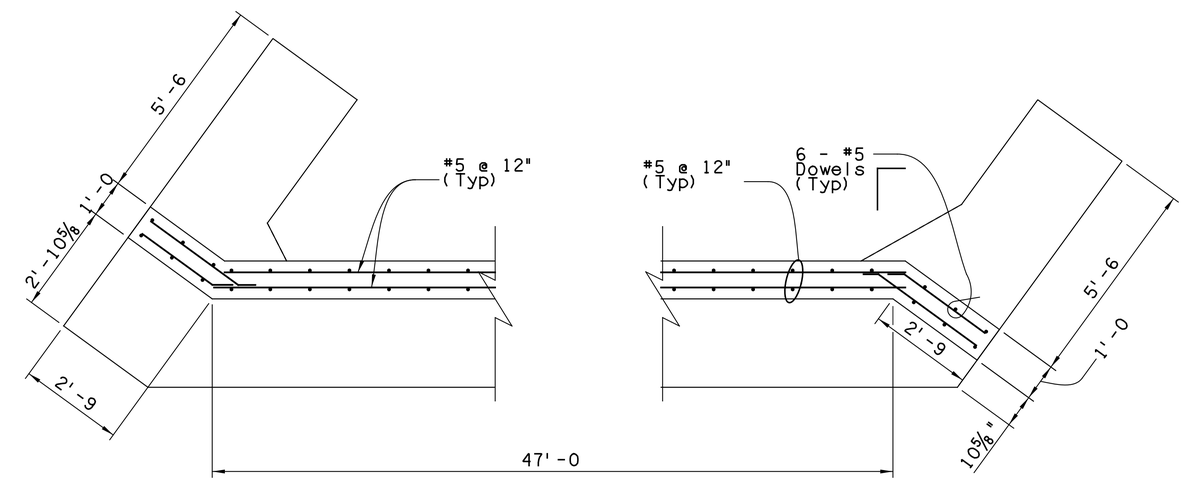

SECTION C 1.07
Scale: ½" = 1'-0

	NAME	DATE
DESIGN	CLM/ZU	06/16
DRAWN	AJM	06/16
CHECKED	JRP	06/16

T·Y·LIN INTERNATIONAL
engineers | planners | scientists
60 E. Rio Salado Parkway, Suite 501
Tempe, Arizona 85281, Tel. 480-968-8814

ARIZONA DEPARTMENT OF TRANSPORTATION
INFRASTRUCTURE DELIVERY AND OPERATIONS DIVISION
BRIDGE GROUP

Sta 373 +
CRAYCROFT RD TI OP EB & WB
ABUTMENT DETAILS

LOCATION: CRAYCROFT RD TI OP
STR #594 & #595

ROUTE	MILEPOST	STRUCTURE NO.
I-10	268.08	594 EB 595 WB

Registered Professional Engineer (Civil) CERTIFICATE NO. 10970 JAMES R. PYNE Date Signed 06/16/16 ARIZONA, U.S.A.
Expires 12/31/2018

DWG. S-1.08 OF 28

TRACS NO. H 8774 01 C | 010-E(219)T | ____ OF ____

Workspace: H:\sustain\projects\221867.00 Craycroft - Wilmot.pcf | Plot Driver: H:\sustain\plotcfg\ADOT_PDF_FULL.pll | Pentable: H:\sustain\plotcfg\pen\stdplot.tbl
SURVEY NO. | FINISHED PLANS- | REVISIONS- | LOCATION- | DATE-

amacias 12:56:06 PM 6/16/2016 T:\Tempe\Projects\221867.00\600_CADD\05_Official\Delv Files\Structures\Craycroft\Sealed Submittal\08s594ad.dgn

F.H.W.A. REGION	STATE	PROJECT NO.	SHEET NO.	TOTAL SHEETS	RECORD DRAWING
9	ARIZ.	010-E(219)T	61	82	

010 PM 267

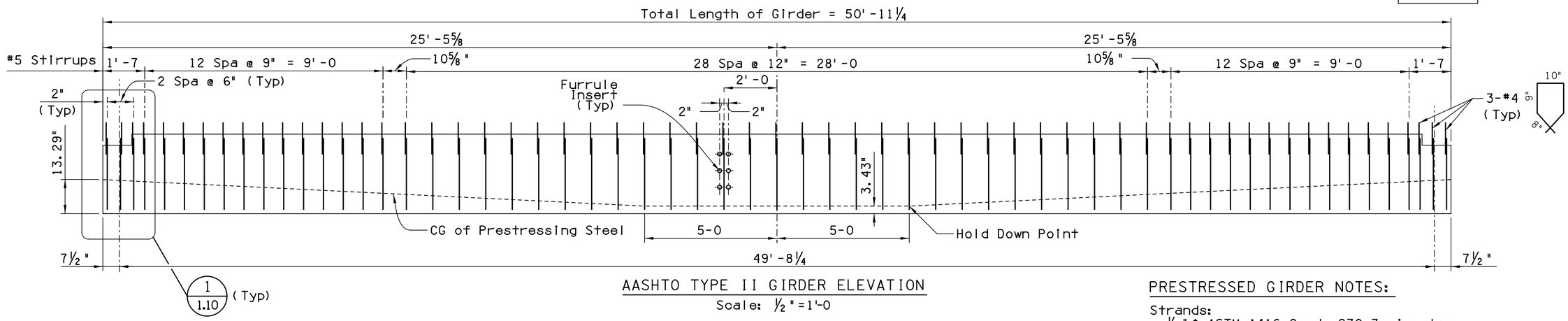

AASHTO TYPE II GIRDER ELEVATION

Scale: ½"=1'-0

NOTE:

Threaded inserts at abut not shown for clarity. See Dwg S-1.10 for details.

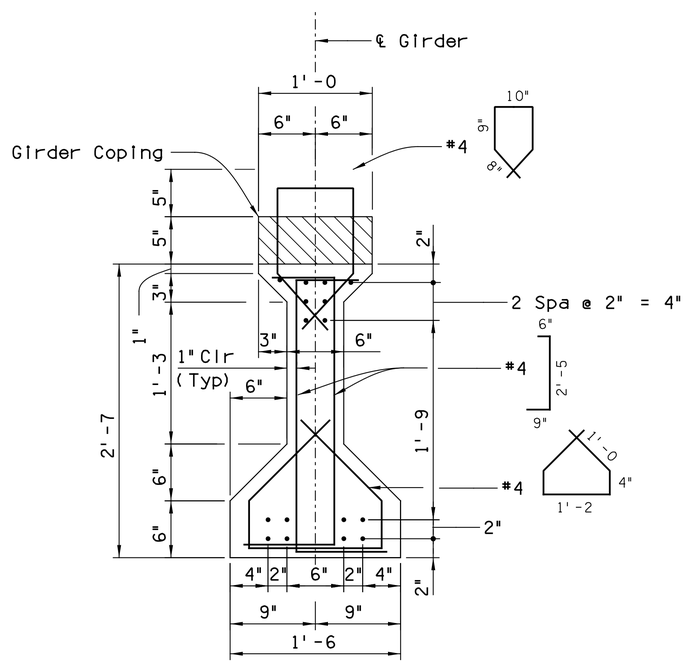

END SECTION

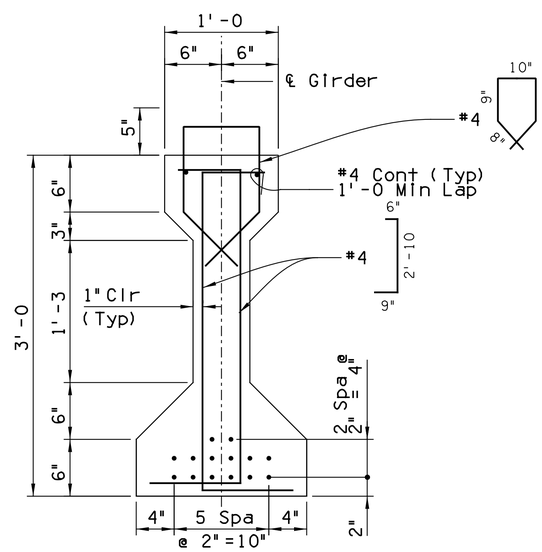

MIDSPAN SECTION

AASHTO TYPE II GIRDER SECTION

Scale: 1½"=1'-0

(14 - 0.5" Low Relax Strands)

PRESTRESSED GIRDER NOTES:

Strands:
½"Φ ASTM A416 Grade 270 7-wire low relaxation prestressing strand with initial strand tension equal to 30,983lbs (0.75 fpu). fpu = 270 ksi.

Nominal area of strand = 0.153 sq. in.
The use of masked strands will not be allowed.
The minimum spacing for strands is 2" on centers. Approval of the Engineer is required for deviation.

Prestressing Force:
Pi = 434 K Initial force per girder at release.
Pw = 326 K Working force - total force remaining per girder after losses.

Prestressing:
Girder shall be prestressed by the pretensioning method only.

Concrete Strength:
f'ci = 4000 psi minimum strength at transfer.
f'c = 5000 psi minimum strength at 28 day.

Girder Details:
The girder length shown does not include elastic shortening effects. Casting lengths shall be increased as necessary to account for shortening effects.

The Contact surface of the top flange shall be roughened to a depth of approximately ¼ inch.

Refer to Record Drawings for girder anchor system and paint with matching color.

Girder ends shall be cast vertical.

Girder transformed section properties were used for its design

	NAME	DATE
DESIGN	CLM/ZU	06/16
DRAWN	AJM	06/16
CHECKED	JRP	06/16

T.Y. LIN INTERNATIONAL
engineers | planners | scientists
60 E. Rio Salado Parkway, Suite 501
Tempe, Arizona 85281, Tel. 480-968-8814

ARIZONA DEPARTMENT OF TRANSPORTATION
INFRASTRUCTURE DELIVERY AND OPERATIONS DIVISION
BRIDGE GROUP

Sta 373 +
CRAYCROFT RD TI OP EB & WB
GIRDER DETAIL 1

I-10	268.08	594 EB 595 WB
ROUTE	MILEPOST	STRUCTURE NO.

LOCATION: CRAYCROFT RD TI OP STR #594 & #595

Registered Professional Engineer (Civil) CERTIFICATE NO. 10970 JAMES R. PYNE Date Signed 06/16/16 ARIZONA, U.S.A. Expires 12/31/2018

DWG. S-1. 09 OF 28

TRACS NO. H 8774 01 C | 010-E(219)T | ___ OF ___

Workspace: H:\sustain\projects\221867.00 Craycroft - Wilmot.pcf | Plot Driver: H:\sustain\plotcfg\ADOT_PDF_FULL.plt | Pentable: H:\sustain\plotcfg\pen\stdplot.tbl
SURVEY NO. | FINISHED PLANS- | REVISIONS- | LOCATION- | DATE-

amacias 12:57:17 PM 6/16/2016 T:\Tempe\Projects\221867.00\600_CADD\05_Official\Delv Files\Structures\Craycroft\Sealed Submittal\09s594gd1.dgn

F.H.W.A. REGION	STATE	PROJECT NO.	SHEET NO.	TOTAL SHEETS	RECORD DRAWING
9	ARIZ.	010-E(219)T	62	82	
		010 PM 267			

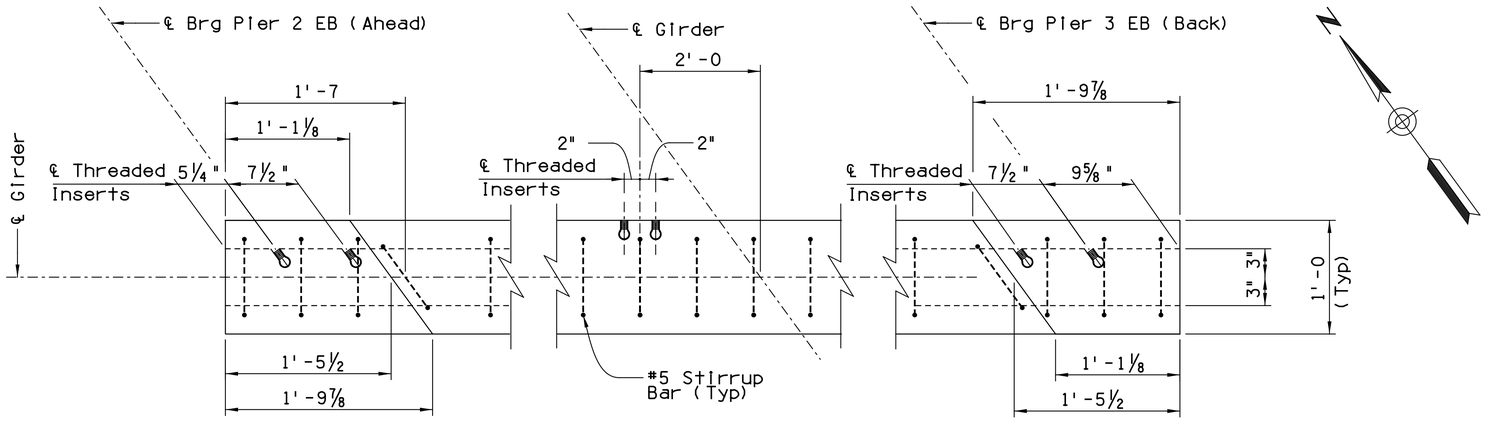

NEW GIRDER PLAN

(Span 3 EB Exterior Girder)
Scale: 1½" = 1'-0

PRESTRESSED GIRDER NOTES:

1. Threaded Inserts shall be Ferrule Loop Inserts for ¾" Φ threaded rods (Typ). Ultimate pullout strength of 10,800 lbs.
2. Threaded Inserts shall be placed parallel to the ℄ Brg piers. Contractor may place the inserts normal to girder with the approval of the Engineer. In this case, shop drawings shall be submitted showing the plan for the placement of Inserts and diaphragm reinforcement.
3. Provide threaded Inserts on the inside face of the exterior girder only.

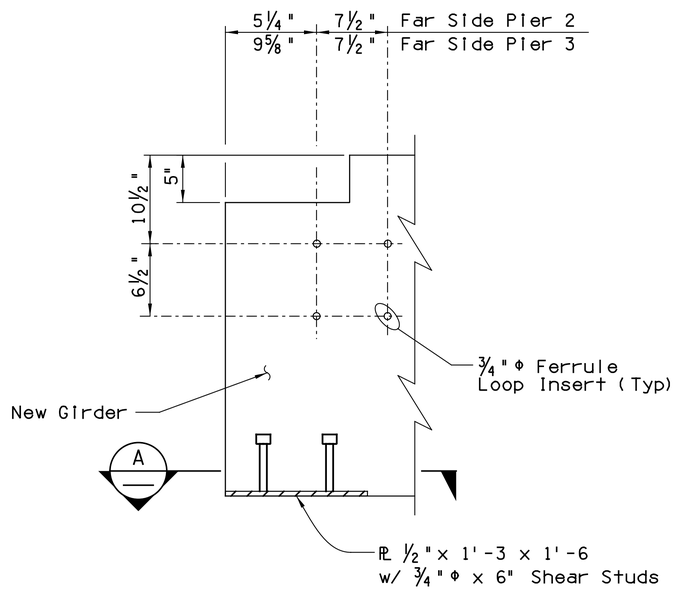

DETAIL

Scale: 1½" = 1'-0 (1 / 1.09)

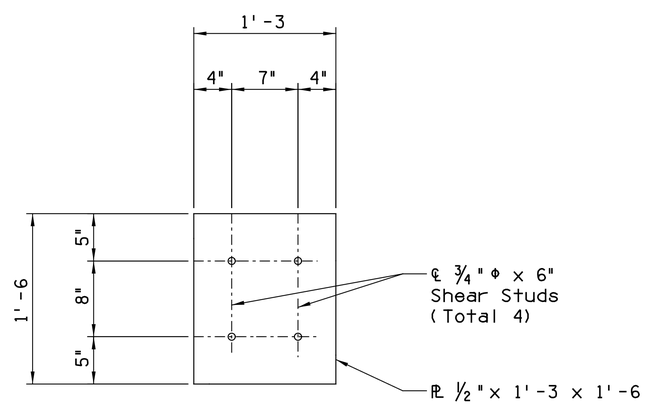

SECTION

Scale: 1½" = 1'-0 (A)

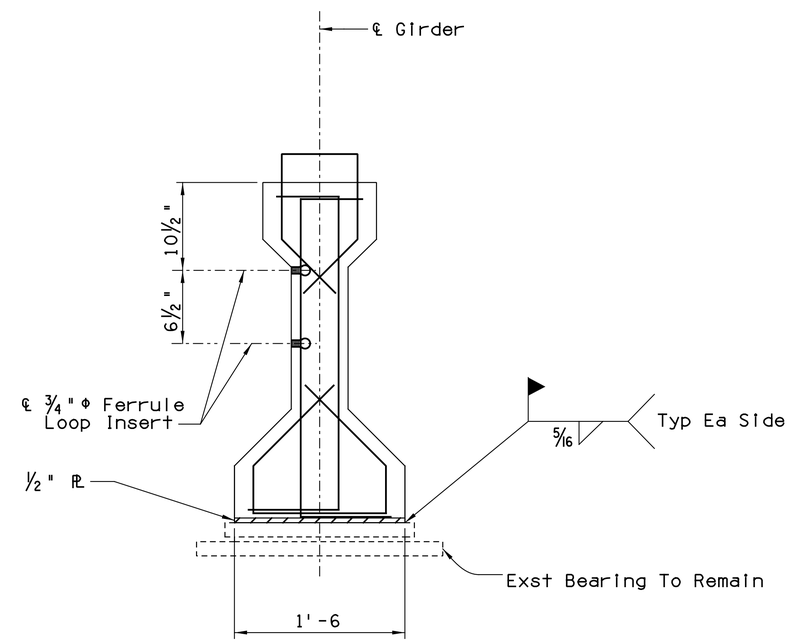

NEW TYPE II GIRDER INSERT DETAIL

Scale: 1½" = 1'-0

	NAME	DATE
DESIGN	CLM/ZU	06/16
DRAWN	AJM	06/16
CHECKED	JRP	06/16

T.Y. LIN INTERNATIONAL
engineers | planners | scientists
60 E. Rio Salado Parkway, Suite 501
Tempe, Arizona 85281, Tel. 480-968-8814

ARIZONA DEPARTMENT OF TRANSPORTATION
INFRASTRUCTURE DELIVERY AND OPERATIONS DIVISION
BRIDGE GROUP

Sta 373 +
CRAYCROFT RD TI OP EB & WB
GIRDER DETAILS 2

LOCATION: CRAYCROFT RD TI OP
STR #594 & #595

ROUTE	MILEPOST	STRUCTURE NO.
I-10	268.08	594 EB 595 WB

Registered Professional Engineer (Civil) CERTIFICATE NO. 10970 JAMES R. PYHE Date Signed 12/31/18 ARIZONA, U.S.A. Expires 12/31/2018

DWG. S-1. 10 OF 28

TRACS NO. H 8774 01 C

010-E(219)T

___ OF ___

Workspace: H:\ustation\projects\221867.00 Craycroft - Wilmot.pcf | Plot Driver: H:\ustation\plotcfg\ADOT_PDF_FULL.pltl | Pentable: H:\ustation\plotcfg\pen\stdplot.tbl
SURVEY NO. | FINISHED PLANS- | REVISIONS- | LOCATION- | DATE-

amacias 12:57:43 PM 6/16/2016 T:\Tempe\Projects\221867.00\600_CADD\05_Official\Delv Files\Structures\Craycroft\Sealed Submittal\10s594gd2.dgn

F.H.W.A. REGION	STATE	PROJECT NO.	SHEET NO.	TOTAL SHEETS	RECORD DRAWING
9	ARIZ.	010-E(219)T	63	82	
		010 PM 267			

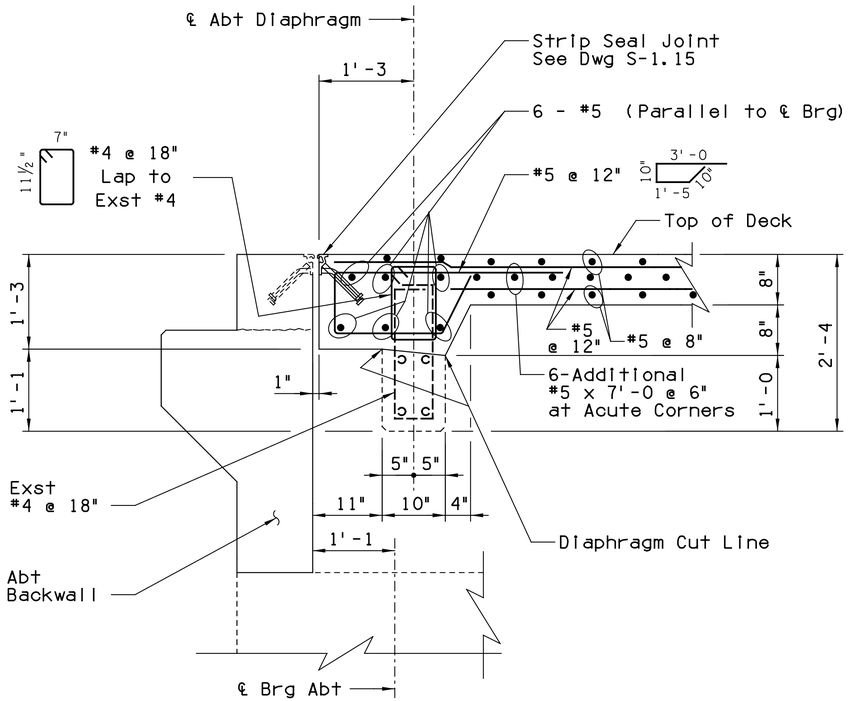

TYPICAL ABUTMENT DIAPHRAGM DETAIL

Scale: 1" = 1'-0

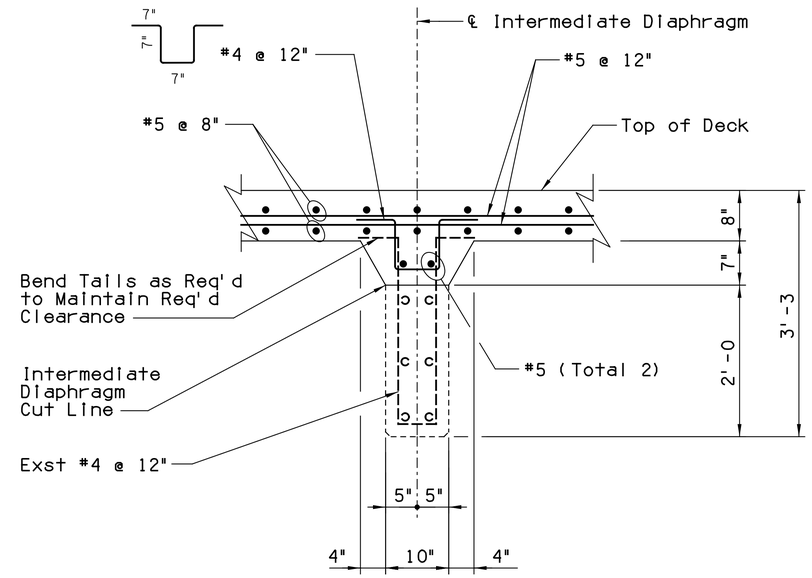

TYPICAL INTERMEDIATE DIAPHRAGM DETAIL

Scale: 1" = 1'-0

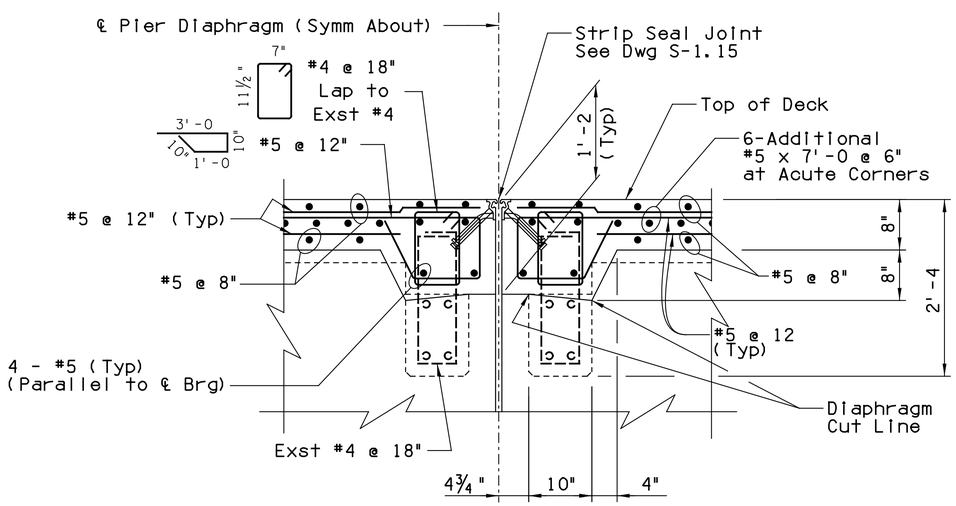

TYPICAL PIER DIAPHRAGM DETAIL

Scale: 1" = 1'-0

	NAME	DATE
DESIGN	CLM/ZU	06/16
DRAWN	AJM	06/16
CHECKED	JRP	06/16

T·Y· LIN INTERNATIONAL
engineers | planners | scientists
60 E. Rio Salado Parkway, Suite 501
Tempe, Arizona 85281, Tel. 480-968-8814

ARIZONA DEPARTMENT OF TRANSPORTATION
INFRASTRUCTURE DELIVERY AND OPERATIONS DIVISION
BRIDGE GROUP

Sta 373 +
CRAYCROFT RD TI OP EB & WB
DIAPHRAGM DETAILS 1

I-10	268.08	594 EB 595 WB
ROUTE	MILEPOST	STRUCTURE NO.

LOCATION: CRAYCROFT RD TI OP
STR #594 & #595

Registered Professional Engineer (Civil)
CERTIFICATE NO. 40870
JOHN R. PYNE
Date Signed 06/10/16
ARIZONA, U.S.A.
Expires 12/31/2018

DWG. S-1. 11 OF 28

TRACS NO. H 8774 01 C | 010-E(219)T | ___ OF ___

Workspace: H:\ustation\projects\221867.00 Craycroft - Willmot.pcf | Plot Driver: H:\ustation\dgn\cfg\ADOT_PDF_FULL.plt | Pentable: H:\ustation\plotcfg\pen\stdplot.tbl
SURVEY NO. | FINISHED PLANS- | REVISIONS- | LOCATION- | DATE-

amacias 12:58:47 PM 6/16/2016 T:\Tempe\Projects\221867.00\600_CADD\05_Official\Delv Files\Structures\Craycroft\Sealed Submittal\11s594diadets1.dgn

F.H.W.A. REGION	STATE	PROJECT NO.	SHEET NO.	TOTAL SHEETS	RECORD DRAWING
9	ARIZ.	010-E(219)T	64	82	
		010 PM 267			

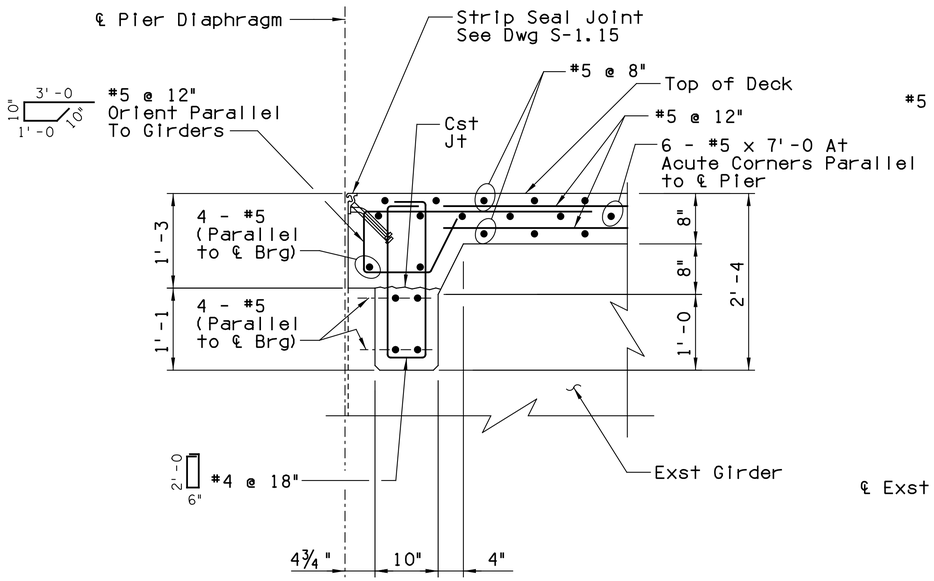

TYPICAL NEW PIER DIAPHRAGM DETAIL

Scale: 1" = 1'-0

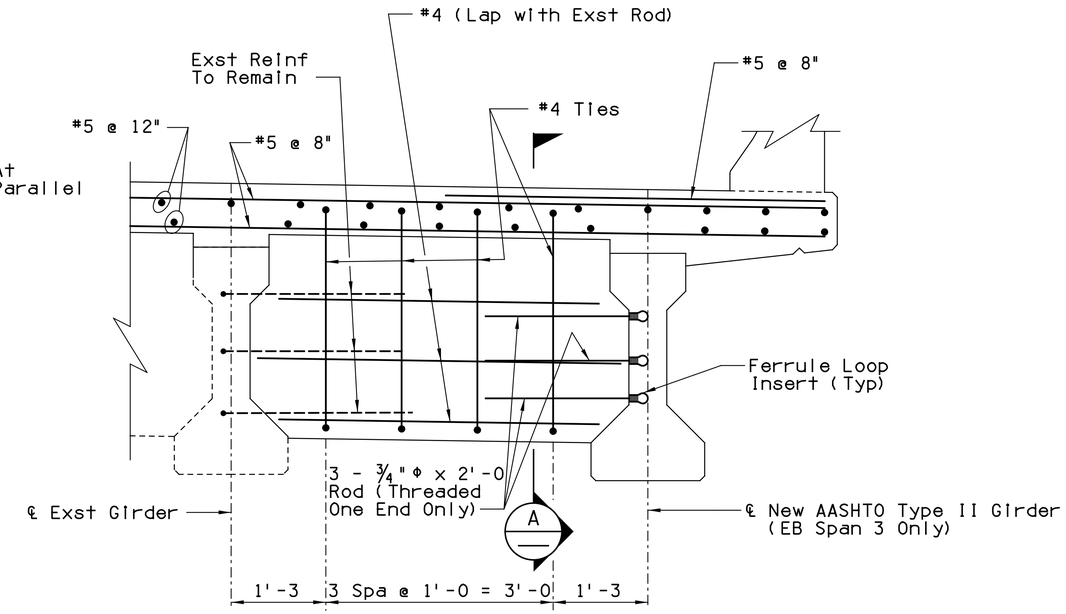

NEW INTERMEDIATE DIAPHRAGM DETAIL

Scale: 1" = 1'-0

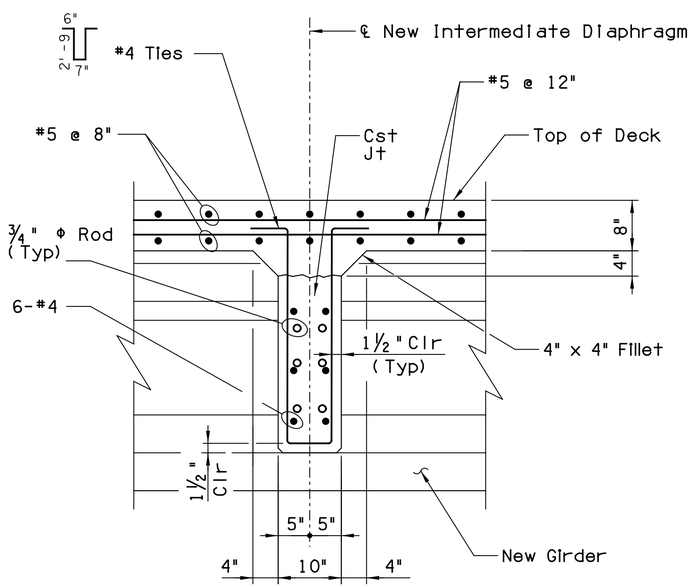

SECTION A

Scale: 1" = 1'-0

	NAME	DATE
DESIGN	CLM/ZU	06/16
DRAWN	AJM	06/16
CHECKED	JRP	06/16

T·Y· LIN INTERNATIONAL
engineers | planners | scientists
60 E. Rio Salado Parkway, Suite 501
Tempe, Arizona 85281, Tel. 480-968-8814

ARIZONA DEPARTMENT OF TRANSPORTATION
INFRASTRUCTURE DELIVERY AND OPERATIONS DIVISION
BRIDGE GROUP

Sta 373 +
CRAYCROFT RD TI OP EB & WB
DIAPHRAGM DETAILS 2

I-10	268.08	594 EB 595 WB
ROUTE	MILEPOST	STRUCTURE NO.

LOCATION: CRAYCROFT RD TI OP
STR #594 & #595

Registered Professional Engineer (Structural) CERTIFICATE NO. 10970 JAMES R. PYNE Date Signed 06/16/16 ARIZONA, U.S.A. Expires 12/31/2018

DWG. S-1. 12 OF 28

TRACS NO. H 8774 01 C | 010-E(219)T | ___ OF ___

Pentable: H:\ustation\plotcfg\pen\stdplot.tbl | SURVEY NO. | FINISHED PLANS- | REVISIONS- | DATE-
Plot Driver: H:\ustation\plotcfg\ADOT_PDF_FULL.pll | LOCATION- | DATE-
Workspace: H:\ustation\projects\221867.00 Craycroft - Willmot.pcf | SURVEY NO. | FINISHED PLANS- | REVISIONS-

amacias 12:59:34 PM 6/16/2016 T:\Tempe\Projects\221867.00\600_CADD\05_Official\Delv Files\Structures\Craycroft\Sealed Submittal\12s594diadets2.dgn

F.H.W.A. REGION	STATE	PROJECT NO.	SHEET NO.	TOTAL SHEETS	RECORD DRAWING
9	ARIZ.	010-E(219)T	65	82	

010 PM 267

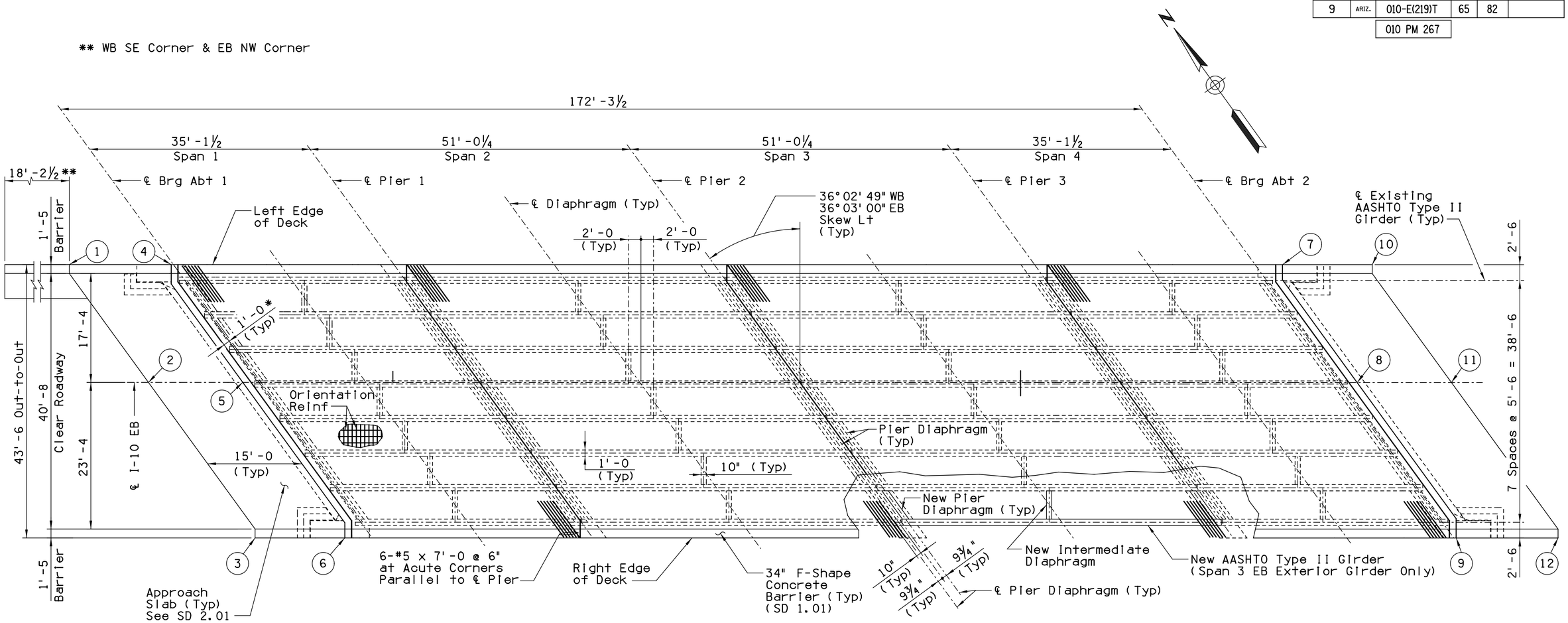

* Measured to Edge of Deck

EB DECK PLAN

(WB Similar)
Scale: ⅛" = 1'-0

WB Approach Slab Elevations				
Location	Label	Abt 1 Elev	Label	Abt 2 Elev
24.75' Lt	1	2739.61	7	2739.83
Cst ℄	2	2740.06	8	2740.13
18.75' Rt	3	2740.40	9	2740.36
24.75' Lt	4	2739.69	10	2739.77
Cst ℄	5	2740.13	11	2740.06
18.75' Rt	6	2740.46	12	2740.28

EB Approach Slab Elevations				
Location	Label	Abt 1 Elev	Label	Abt 2 Elev
18.75 Lt	1	2740.28	7	2740.46
Cst ℄	2	2740.06	8	2740.13
24.75' Rt	3	2739.77	9	2739.69
18.75' Lt	4	2740.36	10	2740.39
Cst ℄	5	2740.13	11	2740.06
24.75' Rt	6	2739.83	12	2739.61

	NAME	DATE
DESIGN	CLM/ZU	06/16
DRAWN	AJM	06/16
CHECKED	JRP	06/16

T·Y·LIN INTERNATIONAL
engineers | planners | scientists
60 E. Rio Salado Parkway, Suite 501
Tempe, Arizona 85281, Tel. 480-968-8814

ARIZONA DEPARTMENT OF TRANSPORTATION
INFRASTRUCTURE DELIVERY AND OPERATIONS DIVISION
BRIDGE GROUP

Sta 373 +
CRAYCROFT RD TI OP EB & WB
DECK PLAN

LOCATION
CRAYCROFT RD TI OP
STR #594 & #595

I-10	268.08	594 EB 595 WB
ROUTE	MILEPOST	STRUCTURE NO.

Registered Professional Engineer (Civil)
CERTIFICATE NO. 10970
JAMES R. PYNE
Date Signed 06/20/16
ARIZONA, U.S.A.
Expires 12/31/2018

DWG. S-1. 13 OF 28

TRACS NO. H 8774 01 C

010-E(219)T

____ OF ____

Workspace: H:\sustain\projects\221867.00 Craycroft - Wilmot.pcf | Plot Driver: H:\sustain\plotcfg\ADOT_PDF_FULL.pll | Pentable: H:\sustain\plotcfg\pen\stdpdot.tbl
SURVEY NO. | FINISHED PLANS- | REVISIONS- | LOCATION- | DATE-

amacias 1:06:19 PM 6/16/2016 T:\Tempe\Projects\221867.00\600_CADD\05_Official\Delv Files\Structures\Craycroft\Sealed Submittal\13s594dp.dgn

F.H.W.A. REGION	STATE	PROJECT NO.	SHEET NO.	TOTAL SHEETS	RECORD DRAWING
9	ARIZ.	010-E(219)T	66	82	

010 PM 267

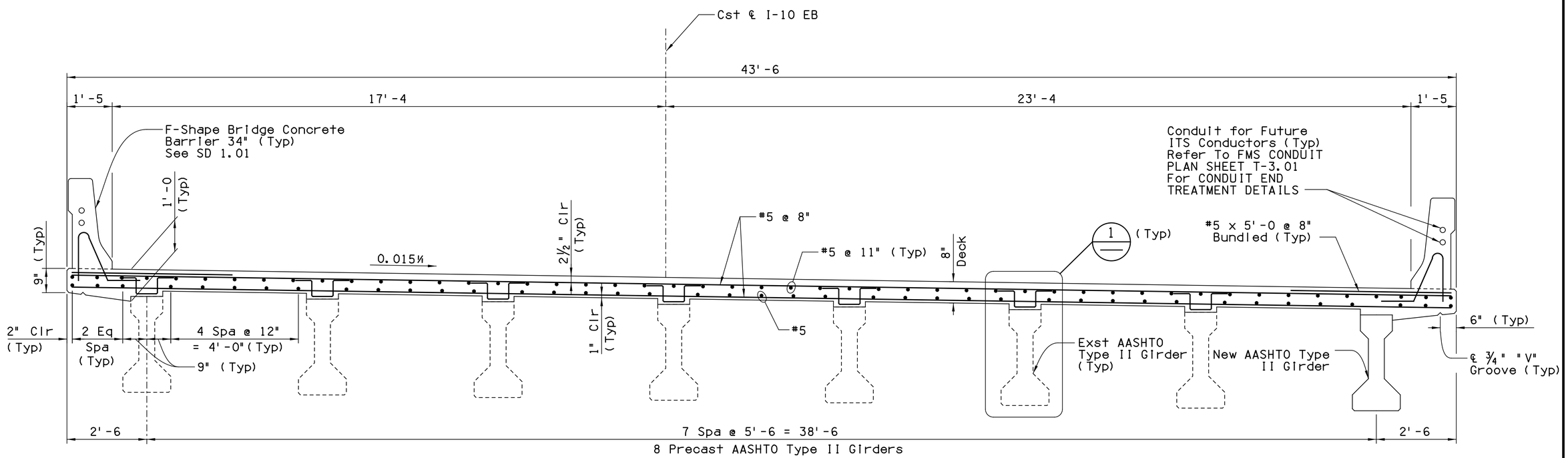

TYPICAL REINFORCING
(EB SHOWN, WB OPPOSITE)
Scale: ⅝"=1'-0

SUPERSTRUCTURE NOTES:

All continuous horizontal reinforcing steel in the deck and barriers may be spliced if approved by the Engineer with the minimum lap lengths specified in Note 1 and subject to the following limitations in Notes 2 thru 6, unless otherwise noted.

1. Minimum lap length of bar splices shall be:

   Barrier #4 bars.....1'-10
   Deck #5 bars.....1'-10

2. Bars shall not be spliced within the required lap length of the adjacent bars.

3. Top transverse bars in the deck slab shall be spliced at the center of the deck span.

4. Bottom transverse bars in the deck slab shall be spliced at ℄ girder.

5. Transverse deck bars shall be placed normal to the girders.

6. Longitudinal deck bars shall be placed parallel with the girders.

7. ⌒ Cost of bars is included in the "F-Shape Bridge Concrete Barrier and Transition (34")".

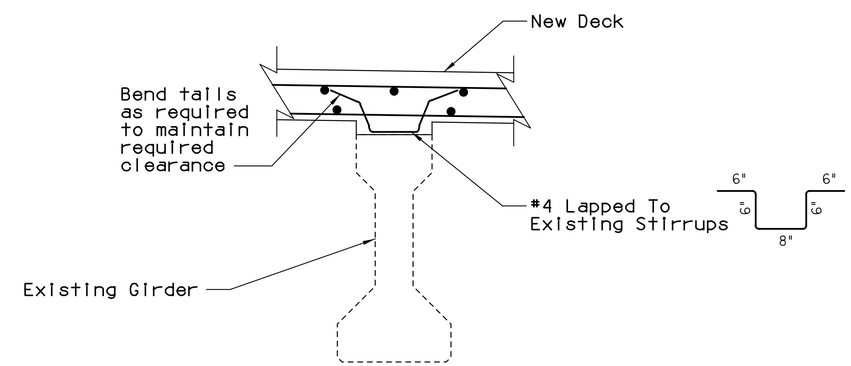

DETAIL 1
Scale: 1"=1'-0

	NAME	DATE
DESIGN	CLM/ZU	06/16
DRAWN	AJM	06/16
CHECKED	JRP	06/16

T.Y. LIN INTERNATIONAL
engineers | planners | scientists
60 E. Rio Salado Parkway, Suite 501
Tempe, Arizona 85281, Tel. 480-968-8814

ARIZONA DEPARTMENT OF TRANSPORTATION
INFRASTRUCTURE DELIVERY AND OPERATIONS DIVISION
BRIDGE GROUP

Sta 373 +
CRAYCROFT RD TI OP EB & WB
DECK TYPICAL SECTION

I-10	268.08	594 EB 595 WB
ROUTE	MILEPOST	STRUCTURE NO.

LOCATION: CRAYCROFT RD TI OP STR #594 & #595

Registered Professional Engineer (Civil) CERTIFICATE NO. 10970 JAMES R. PYNE Date Signed 12/18/15 ARIZONA, U.S.A. Expires 12/31/2018

DWG. S-1. 14 OF 28

TRACS NO. H 8774 01 C | 010-E(219)T | ___ OF ___

Workspace: H:\ustation\projects\221867.00 Craycroft - Wilmot.pcf | Plot Driver: H:\ustation\plotcfg\ADOT_PDF_FULL.pltl | Pentable: H:\ustation\plotcfg\pen\stdplot.tbl
SURVEY NO. | FINISHED PLANS- | REVISIONS- | LOCATION- | DATE-

F.H.W.A. REGION	STATE	PROJECT NO.	SHEET NO.	TOTAL SHEETS	RECORD DRAWING
9	ARIZ.	010-E(219)T	67	82	
		010 PM 267			

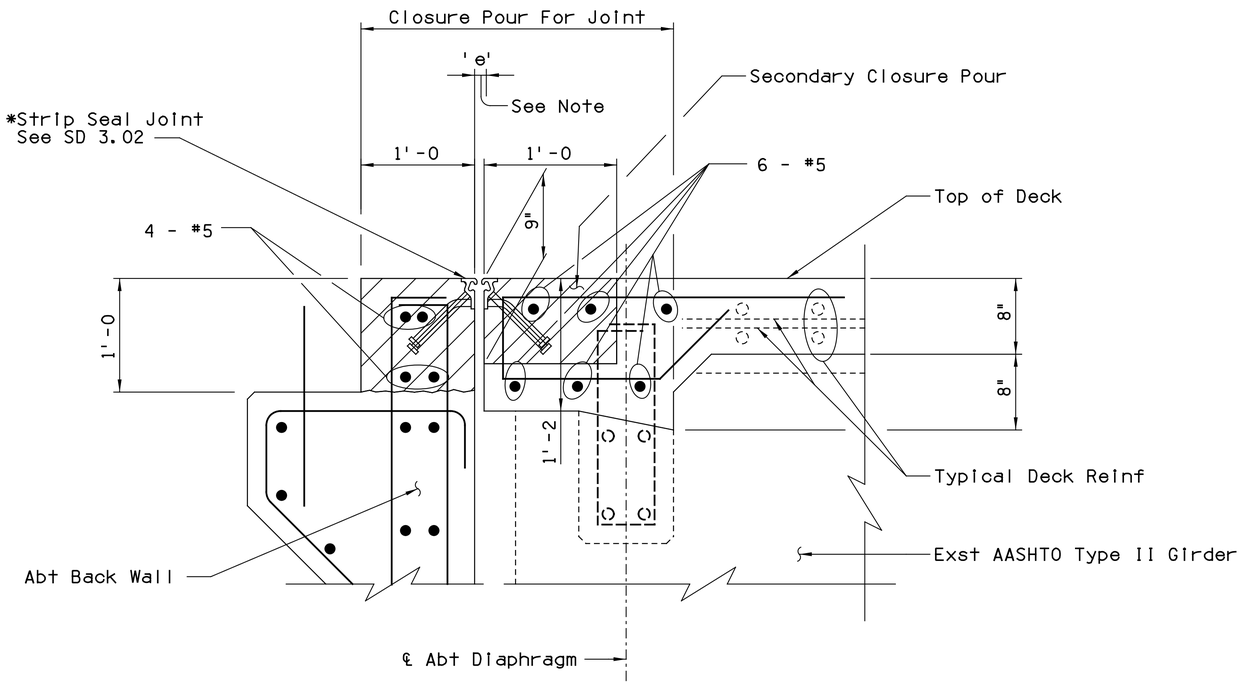

EXPANSION JOINT DETAIL

(Abt Shown, Pier Similar)
Scale: 1½"=1'-0

* The rubber gland and retainer rails shall be installed in one continuous piece without splices

JOINT INSTALLATION NOTES:

The contractor shall apply an approved bonding agent to all concrete contact surfaces prior to placing of new concrete.

The contractor shall take due care in the placement of concrete under the new joint angles to ensure that proper consolidation is achieved. After placement, the Engineer shall inspect the joint for voids by sounding the angle with a hammer. All voids shall be repaired by the contractor by epoxy injection at no cost to the Department.

Joint opening 'e' shall be adjusted according to the Temperature Correction Table.

Expansion joint closure pour concrete shall be 4.5 ksi.

JOINT TABLE

	Abt 1	Piers 1 & 2	Pier 3	Abt 2
'e'	2"	2"	2"	2"
MR	0.22"	0.31"	0.22"	0

Mean Temperature = 75°F

	NAME	DATE
DESIGN	CLM/ZU	06/16
DRAWN	AJM	06/16
CHECKED	JRP	06/16

T.Y. LIN INTERNATIONAL
engineers | planners | scientists
60 E. Rio Salado Parkway, Suite 501
Tempe, Arizona 85281, Tel. 480-968-8814

ARIZONA DEPARTMENT OF TRANSPORTATION
INFRASTRUCTURE DELIVERY AND OPERATIONS DIVISION
BRIDGE GROUP

Sta 373 +
CRAYCROFT RD TI OP EB & WB
EXPANSION JOINT DETAILS

I-10	268.08	594 EB 595 WB
ROUTE	MILEPOST	STRUCTURE NO.

LOCATION: CRAYCROFT RD TI OP STR #594 & #595

Registered Professional Engineer (Civil) CERTIFICATE NO. 10970 JAMES R. PYNE Date Signed 06/16/16 ARIZONA, U.S.A.
Expires 12/31/2018

DWG. S-1. 15 OF 28

TRACS NO. H 8774 01 C | 010-E(219)T | ___ OF ___

amacias 1:08:07 PM 6/16/2016 T:\Tempe\Projects\221867.00\600_CADD\05_Official\Delv Files\Structures\Craycroft\Sealed Submittal\15s594ejd.dgn

Workspace: H:\sustain\projects\221867.00 Craycroft - Wilmot.pcf | Plot Driver: H:\sustain\plotcfg\ADOT_PDF_FULL.plt | Pentable: H:\sustain\plotcfg\pen\stdplot.tbl
SURVEY NO. | FINISHED PLANS- | REVISIONS- | LOCATION- | DATE-

F.H.W.A. REGION	STATE	PROJECT NO.	SHEET NO.	TOTAL SHEETS	RECORD DRAWING
9	ARIZ.	010-E(219)T	68	82	

010 PM 267

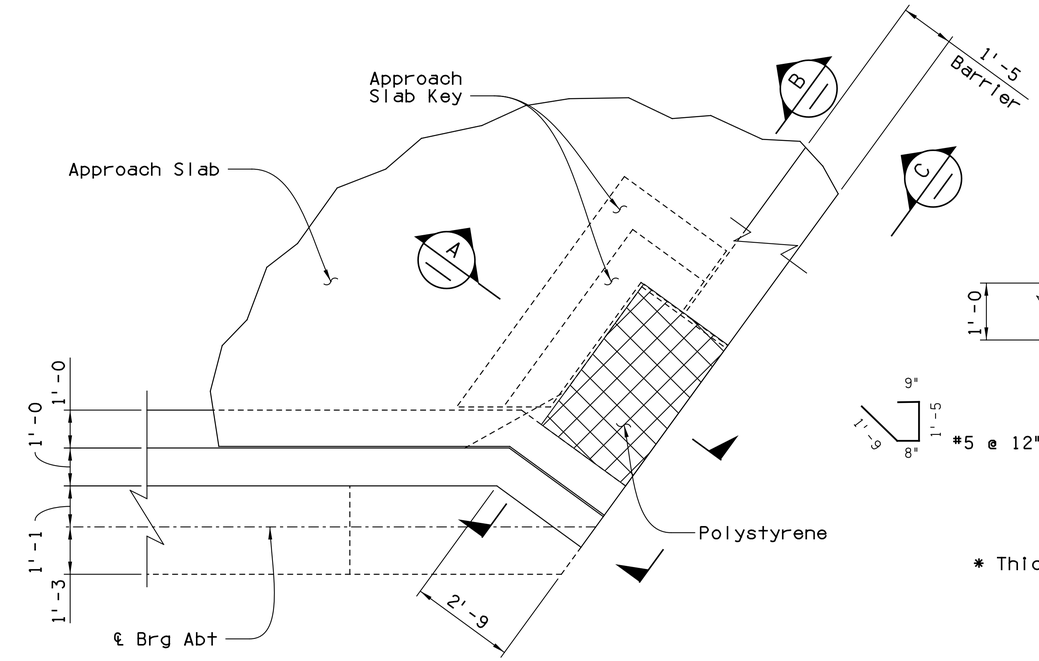

PARTIAL ABUTMENT/APPROACH SLAB PLAN
Scale: ½"=1'-0

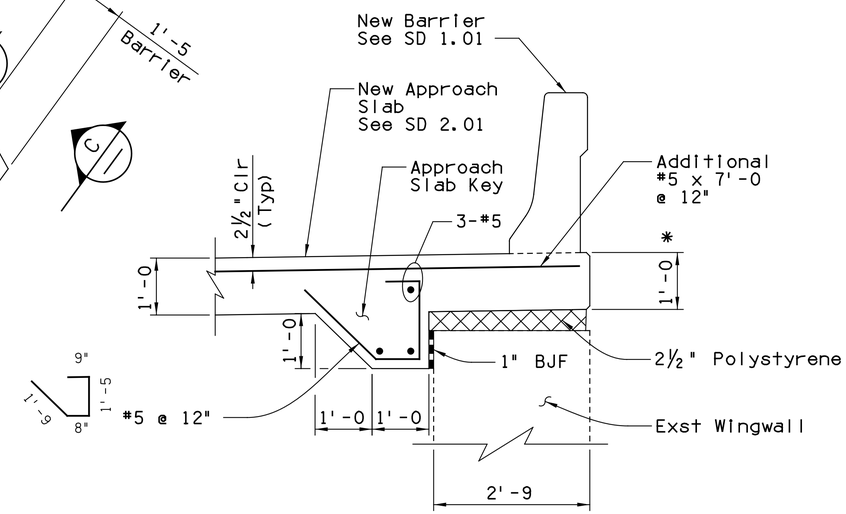

* Thickness can be increased if necessary

SECTION A
Scale: ¾"=1'-0

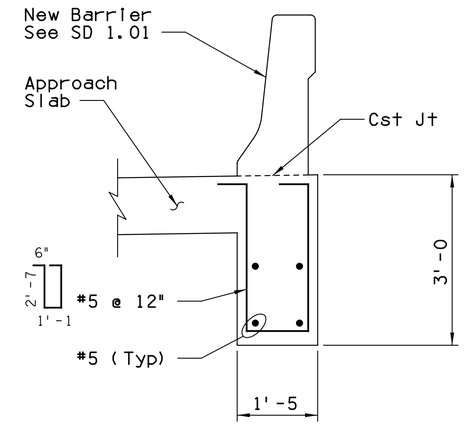

SECTION D
Scale: ¾"=1'-0

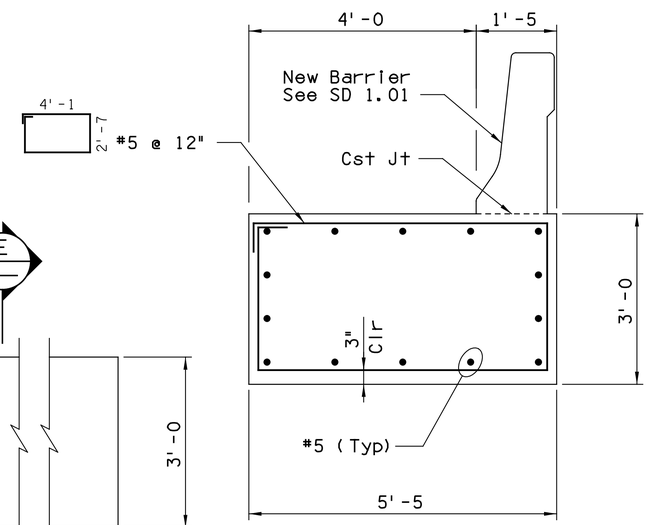

SECTION E
Scale: ¾"=1'-0

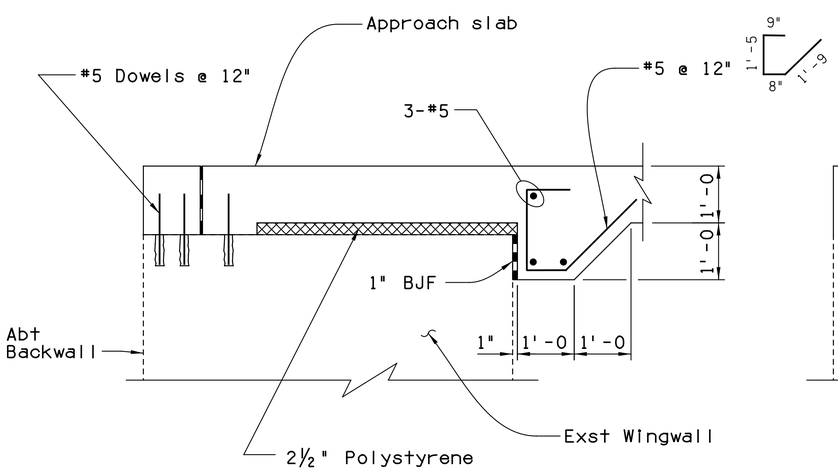

SECTION B
Scale: ¾"=1'-0

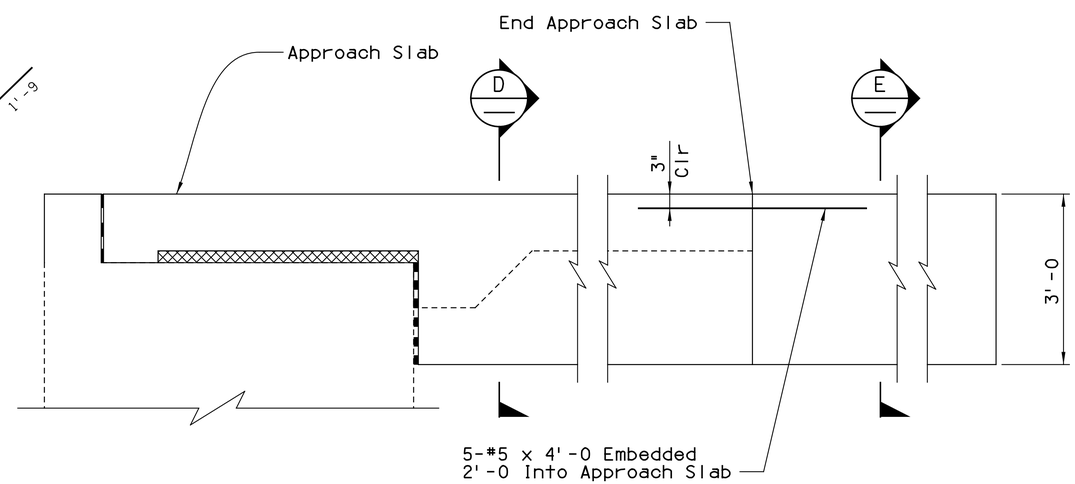

ELEVATION C
Scale: ¾"=1'-0

WB Bridge SE Corner Only
EB Bridge NW Corner Only

	NAME	DATE
DESIGN	CLM/ZU	06/16
DRAWN	AJM	06/16
CHECKED	JRP	06/16

T·Y·LIN INTERNATIONAL
engineers | planners | scientists
60 E. Rio Salado Parkway, Suite 501
Tempe, Arizona 85281, Tel. 480-968-8814

ARIZONA DEPARTMENT OF TRANSPORTATION
INFRASTRUCTURE DELIVERY AND OPERATIONS DIVISION
BRIDGE GROUP

Sta 373 +
CRAYCROFT RD TI OP EB & WB
MISCELLANEOUS DETAILS

I-10	268.08	594 EB 595 WB
ROUTE	MILEPOST	STRUCTURE NO.

LOCATION: CRAYCROFT RD TI OP STR #594 & #595

Registered Professional Engineer (Civil) Certificate No. 10970 JAMES R. PYNE Date Signed 06/10/16 ARIZONA, U.S.A.
Expires 12/31/2018

DWG. S-1. 16 OF 28

TRACS NO. H 8774 01 C | 010-E(219)T | ___ OF ___

Workspace: H:\sustain\projects\221867.00 Craycroft - Villmot.pcf | Plot Driver: H:\sustain\plotcfg\ADOT_PDF_FULL.plt | Pentable: H:\sustain\plotcfg\pen\stdplot.tbl
SURVEY NO. | FINISHED PLANS- | REVISIONS- | LOCATION- | DATE-

amacias 1:08:43 PM 6/16/2016 T:\Tempe\Projects\221867.00\600_CADD\05_Official\Delv Files\Structures\Craycroft\Sealed Submittal\16s594md1.dgn

F.H.W.A. REGION	STATE	PROJECT NO.	SHEET NO.	TOTAL SHEETS	RECORD DRAWING
9	ARIZ.	010-E(219)T	69	82	
		010 PM 267			

CAMBER FOR EXISTING GIRDERS - SPAN 1 AND 4 (WB AND EB)											
Deflection (Ft) at Tenth Points											
	0.0 (℄ Brg)	0.1 pt.	0.2 pt.	0.3 pt.	0.4 pt.	0.5 pt.	0.6 pt.	0.7 pt.	0.8 pt.	0.9 pt.	1.0 (℄ Brg)
Initial (up)	0	.004	.007	.008	.010	.010	.010	.008	.007	.004	0
Final (down)	0	.015	.026	.035	.039	.041	.039	.035	.026	.015	0

CAMBER FOR EXISTING GIRDERS - SPAN 2 AND 3 (WB AND EB)											
Deflection (Ft) at Tenth Points											
	0.0 (℄ Brg)	0.1 pt.	0.2 pt.	0.3 pt.	0.4 pt.	0.5 pt.	0.6 pt.	0.7 pt.	0.8 pt.	0.9 pt.	1.0 (℄ Brg)
Initial (up)	0	.025	.043	.057	.064	.067	.064	.057	.043	.025	0
Final (down)	0	.036	.064	.086	.099	.104	.099	.086	.064	.036	0

DEFLECTIONS - SPAN 3 EB (NEW GIRDER ONLY)											
Deflection (Ft) at Tenth Points											
	0.0 (℄ Brg)	0.1 pt.	0.2 pt.	0.3 pt.	0.4 pt.	0.5 pt.	0.6 pt.	0.7 pt.	0.8 pt.	0.9 pt.	1.0 (℄ Brg)
Release (up)	0	.016	.032	.044	.052	.055	.052	.044	.032	.016	0
Initial (up)	0	.028	.053	.074	.088	.093	.088	.074	.053	.028	0
Final (down)	0	.036	.064	.086	.099	.104	.099	.086	.064	.036	0

NEW GIRDER DEFLECTION NOTES:

Release Deflection equals the deflection that the prestressed girder undergoes at the time of strand release. The Release Deflection includes the dead load of the girder and the release prestressing force (including the effects of elastic shortening).

Initial Deflection equals the deflection the prestressed girder undergoes at the time of erection prior to the deck pours. The Initial Deflection includes the deflection due to the dead load of the girder, the initial prestressing and the effects of creep and prestress loss up to the time of erection (assumed at 60 days after release).

Final Deflection equals the deflection due to the dead load of the deck slab, diaphragms, parapets and the effects of long term creep on composite girders.

EXISTING GIRDER DEFLECTION NOTES:

Existing camber equals the deflection of the existing girders after the barrier and deck have been removed.

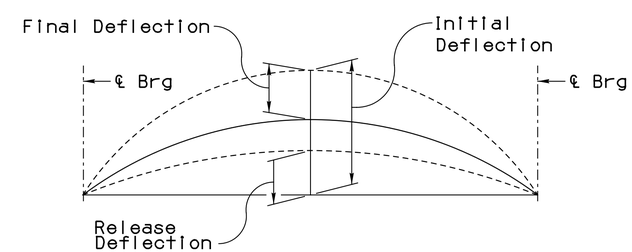

DEFLECTION DIAGRAM

Not To Scale

	NAME	DATE
DESIGN	CLM/ZU	06/16
DRAWN	AJM	06/16
CHECKED	JRP	06/16

T·Y· LIN INTERNATIONAL
engineers | planners | scientists
60 E. Rio Salado Parkway, Suite 501
Tempe, Arizona 85281, Tel. 480-968-8814

ARIZONA DEPARTMENT OF TRANSPORTATION
INFRASTRUCTURE DELIVERY AND OPERATIONS DIVISION
BRIDGE GROUP

Sta 373 +
CRAYCROFT RD TI OP EB & WB
GIRDER DEFLECTIONS

LOCATION: CRAYCROFT RD TI OP
STR #594 & #595

ROUTE	MILEPOST	STRUCTURE NO.
I-10	268.08	594 EB 595 WB

Registered Professional Engineer (Civil) CERTIFICATE NO. 10970 JAMES R. PYNE Date Signed 06/16/16 ARIZONA, U.S.A.
Expires 12/31/2018

DWG. S-1. 17 OF 28

TRACS NO. H 8774 01 C | 010-E(219)T | ___ OF ___

amacias 1:09:31 PM 6/16/2016 T:\Tempe\Projects\221867.00\600_CADD\05_Official\Delv Files\Structures\Crayoroft\Sealed Submittal\17s594def.dgn

Workspace: H:\ustation\projects\221867.00 Craycroft - Wilmot.pcf | Plot Driver: H:\ustation\plotcfg\ADOT_PDF_FULL.plt | Pentable: H:\ustation\plotcfg\pen\stdplot.tbl
SURVEY NO. | FINISHED PLANS- | REVISIONS- | LOCATION- | DATE-

F.H.W.A. REGION	STATE	PROJECT NO.	SHEET NO.	TOTAL SHEETS	RECORD DRAWING
9	ARIZ.	010-E(219)T	70	82	

010 PM 267

WB BRIDGE SCREED ELEVATIONS SPAN 1											
	℄ Brg Abt 1	0.1 pt.	0.2 pt.	0.3 pt.	0.4 pt.	0.5 pt.	0.6 pt.	0.7 pt.	0.8 pt.	0.9 pt.	℄ Brg Pier 1
Lt. Edge of Deck											
Girder # 1											
Girder # 2											
Girder # 3											
Girder # 4											
Girder # 5											
Girder # 6											
Girder # 7											
Girder # 8											
Rt. Edge of Deck											

WB BRIDGE SCREED ELEVATIONS SPAN 2											
	℄ Brg Pier 1	0.1 pt.	0.2 pt.	0.3 pt.	0.4 pt.	0.5 pt.	0.6 pt.	0.7 pt.	0.8 pt.	0.9 pt.	℄ Brg Pier 2
Lt. Edge of Deck											
Girder # 1											
Girder # 2											
Girder # 3											
Girder # 4											
Girder # 5											
Girder # 6											
Girder # 7											
Girder # 8											
Rt. Edge of Deck											

WB BRIDGE SCREED ELEVATIONS SPAN 3											
	℄ Brg Pier 2	0.1 pt.	0.2 pt.	0.3 pt.	0.4 pt.	0.5 pt.	0.6 pt.	0.7 pt.	0.8 pt.	0.9 pt.	℄ Brg Pier 3
Lt. Edge of Deck											
Girder # 1											
Girder # 2											
Girder # 3											
Girder # 4											
Girder # 5											
Girder # 6											
Girder # 7											
Girder # 8											
Rt. Edge of Deck											

WB BRIDGE SCREED ELEVATIONS SPAN 4											
	℄ Brg Pier 3	0.1 pt.	0.2 pt.	0.3 pt.	0.4 pt.	0.5 pt.	0.6 pt.	0.7 pt.	0.8 pt.	0.9 pt.	℄ Brg Abt 2
Lt. Edge of Deck											
Girder # 1											
Girder # 2											
Girder # 3											
Girder # 4											
Girder # 5											
Girder # 6											
Girder # 7											
Girder # 8											
Rt. Edge of Deck											

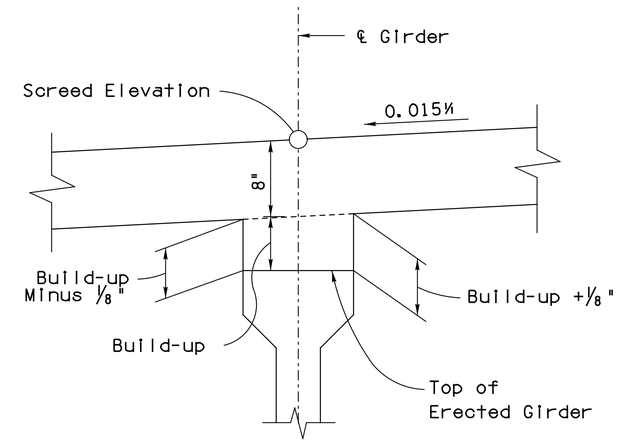

SCREED ELEVATION SECTION

Not To Scale

SCREED ELEVATION NOTES:

Contractor shall measure the top of the Existing Girder Elevation in the field at the tenth points immediately upon completion of deck removal operations. The Elevation, Station, and offset shall be provided to the Bridge Engineer for the evaluation and determination of the build-up and screen elevation.

The Screen Elevation includes an allowance for the deflection due to the dead load of the concrete deck slab, diaphragms, barriers, and effect of long term creep.

Screed Elevations shall be used in setting screeds. Adjustments to the screed elevations, if necessary will be determined by the Engineer after reviewing the top of erected girder elevations. (DO NOT USE FINISHED GRADE ELEVATIONS FOR SETTING SCREED.)

GIRDER BUILD-UP NOTES:

The build-up shall be calculated based on the measured Top of Erected Girder Elevation. The Build-up equals the (Screed Elevation) minus (Measured Erected Girder Elevation) minus (Slab thickness of 8"). The Build-up dimension at the edge of girder will be plus or minus.

The build-up is assumed to be 1½" at ℄ Brg. abutments and piers.

	NAME	DATE
DESIGN	CLM/ZU	06/16
DRAWN	AJM	06/16
CHECKED	JRP	06/16

T·Y·LIN INTERNATIONAL
engineers | planners | scientists
60 E. Rio Salado Parkway, Suite 501
Tempe, Arizona 85281, Tel. 480-968-8814

ARIZONA DEPARTMENT OF TRANSPORTATION
INFRASTRUCTURE DELIVERY AND OPERATIONS DIVISION
BRIDGE GROUP

Sta 373 +
CRAYCROFT RD TI OP EB & WB
WB SCREED ELEVATIONS

I-10	268.08	594 EB 595 WB
ROUTE	MILEPOST	STRUCTURE NO.

LOCATION: CRAYCROFT RD TI OP STR #594 & #595

Registered Professional Engineer (Structural) CERTIFICATE NO. 10970 JAMES R. PYNE Date Signed 06/16/16 ARIZONA, U.S.A.
Expires 12/31/2018

DWG. S-1. 18 OF 28

TRACS NO. H 8774 01 C | 010-E(219)T | ___ OF ___

Workspace: H:\ustation\projects\221867.00 Craycroft - Willmot.pcf | Plot Driver: H:\ustation\plotcfg\ADOT_PDF_FULL.pll | Pentable: H:\ustation\plotcfg\pen\stdplot.tbl
SURVEY NO. | FINISHED PLANS- | REVISIONS- | LOCATION- | DATE-

amacias 1:09:54 PM 6/16/2016 T:\Tempe\Projects\221867.00\600_CADD\05_Official\Delv Files\Structures\Craycroft\Sealed Submittal\18s594WB_screed.dgn

F.H.W.A. REGION	STATE	PROJECT NO.	SHEET NO.	TOTAL SHEETS	RECORD DRAWING
9	ARIZ.	010-E(219)T	71	82	
		010 PM 267			

EB BRIDGE SCREED ELEVATIONS SPAN 1

	℄ Brg Abt 1	0.1 pt.	0.2 pt.	0.3 pt.	0.4 pt.	0.5 pt.	0.6 pt.	0.7 pt.	0.8 pt.	0.9 pt.	℄ Brg. Pier 1
Lt. Edge of Deck											
Girder # 1											
Girder # 2											
Girder # 3											
Girder # 4											
Girder # 5											
Girder # 6											
Girder # 7											
Girder # 8											
Rt. Edge of Deck											

EB BRIDGE SCREED ELEVATIONS SPAN 2

	℄ Brg. Pier 1	0.1 pt.	0.2 pt.	0.3 pt.	0.4 pt.	0.5 pt.	0.6 pt.	0.7 pt.	0.8 pt.	0.9 pt.	℄ Brg. Pier 2
Lt. Edge of Deck											
Girder # 1											
Girder # 2											
Girder # 3											
Girder # 4											
Girder # 5											
Girder # 6											
Girder # 7											
Girder # 8											
Rt. Edge of Deck											

EB BRIDGE SCREED ELEVATIONS SPAN 3

	℄ Brg. Pier 2	0.1 pt.	0.2 pt.	0.3 pt.	0.4 pt.	0.5 pt.	0.6 pt.	0.7 pt.	0.8 pt.	0.9 pt.	℄ Brg. Pier 3
Lt. Edge of Deck											
Girder # 1											
Girder # 2											
Girder # 3											
Girder # 4											
Girder # 5											
Girder # 6											
Girder # 7											
Girder # 8											
Rt. Edge of Deck											

EB BRIDGE SCREED ELEVATIONS SPAN 4

	℄ Brg. Pier 3	0.1 pt.	0.2 pt.	0.3 pt.	0.4 pt.	0.5 pt.	0.6 pt.	0.7 pt.	0.8 pt.	0.9 pt.	℄ Brg Abt 2
Lt. Edge of Deck											
Girder # 1											
Girder # 2											
Girder # 3											
Girder # 4											
Girder # 5											
Girder # 6											
Girder # 7											
Girder # 8											
Rt. Edge of Deck											

	NAME	DATE
DESIGN	CLM/ZU	06/16
DRAWN	AJM	06/16
CHECKED	JRP	06/16

T·Y·LIN INTERNATIONAL
engineers | planners | scientists
60 E. Rio Salado Parkway, Suite 501
Tempe, Arizona 85281, Tel. 480-968-8814

ARIZONA DEPARTMENT OF TRANSPORTATION
INFRASTRUCTURE DELIVERY AND OPERATIONS DIVISION
BRIDGE GROUP

Sta 373 +
CRAYCROFT RD TI OP EB & WB
EB SCREED ELEVATIONS

I-10	268.08	594 EB 595 WB
ROUTE	MILEPOST	STRUCTURE NO.

LOCATION: CRAYCROFT RD TI OP
STR #594 & #595

Registered Professional Engineer (Civil) CERTIFICATE NO. 10970 JAMES R. PYNE Date Signed 06/16/16 ARIZONA, U.S.A.
Expires 12/31/2018

DWG. S-1. 19 OF 28

TRACS NO. H 8774 01 C | 010-E(219)T | ___ OF ___

Pentable: H:\ustation\pdotcfg\pen\stdpdot.tbl
Plot Driver: H:\ustation\pdotcfg\ADOT_PDF_FULL.plt
Workspace: H:\ustation\projects\221867.00 Craycroft - Willmot.pcf
SURVEY NO. | FINISHED PLANS- | REVISIONS- | LOCATION- | DATE-

amacias 1:10:17 PM 6/16/2016 T:\Tempe\Projects\221867.00\600_CADD\05_Official\Delv Files\Structures\Craycroft\Sealed Submittal\19s594EB_screed.dgn

F.H.W.A. REGION	STATE	PROJECT NO.	SHEET NO.	TOTAL SHEETS	RECORD DRAWING
9	ARIZ.	010-E(219)T	72	82	

010 PM 267

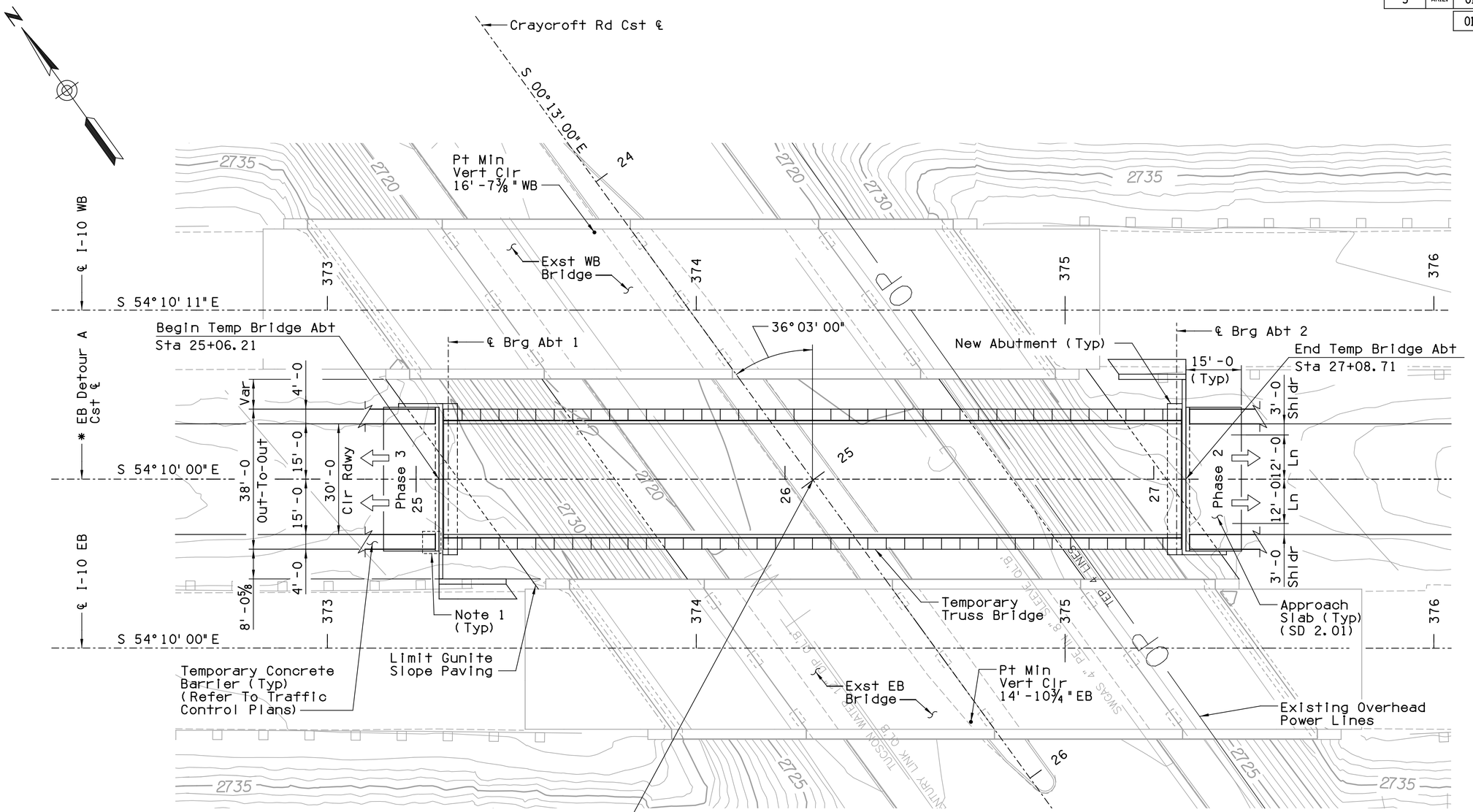

* See Roadway Plans for WB Detour B.

Sta 24+99.74 Craycroft Rd Cst ℄
= Sta 26+07.46 EB Detour A Cst ℄

LOCATION PLAN

Temporary Steel Truss Bridge
Skew = 00°00'00"
Scale: 1"=15'-0

NOTE:

Plans are based on a temporary bridge 200ft in length with a 0.5% cross slope for drainage. A crowned section is acceptable. See Special Provisions.

NOTE:

Contractor Shall Provide Adequate Railing Connection Transition In Order To Meet TL-4 Mesh Standards.

	NAME	DATE
DESIGN	CLM/ZU	06/16
DRAWN	AJM	06/16
CHECKED	JRP	06/16

T·Y·LIN INTERNATIONAL
engineers | planners | scientists
60 E. Rio Salado Parkway, Suite 501
Tempe, Arizona 85281, Tel. 480-968-8814

ARIZONA DEPARTMENT OF TRANSPORTATION
INFRASTRUCTURE DELIVERY AND OPERATIONS DIVISION
BRIDGE GROUP

Sta 373 +
CRAYCROFT RD TI OP EB & WB
TEMPORARY BRIDGE GENERAL PLAN

I-10	268.08	594 EB 595 WB
ROUTE	MILEPOST	STRUCTURE NO.

LOCATION: CRAYCROFT RD TI OP
STR #594 & #595

Registered Professional Engineer (Civil) CERTIFICATE NO. 10970 JAMES R. PYNE Date Signed 06/10/16 ARIZONA, U.S.A.
Expires 12/31/2018

DWG. S-1. 20 OF 28

TRACS NO. H 8774 01 C | 010-E(219)T | ___ OF ___

Workspace: H:\ustation\projects\221867.00 Craycroft - Willmot.pcf | Plot Driver: H:\ustation\plotcfg\ADOT_PDF_FULL.plt | Pentable: H:\ustation\plotcfg\pen\stdplot.tbl
SURVEY NO. | FINISHED PLANS- | REVISIONS- | LOCATION- | DATE-

amacias 1:11:06 PM 6/16/2016 T:\Tempe\Projects\221867.00\600_CADD\05_Official\Delv Files\Structures\Craycroft\Sealed Submittal\20s594gp_Temp Bridge.dgn

F.H.W.A. REGION	STATE	PROJECT NO.	SHEET NO.	TOTAL SHEETS	RECORD DRAWING
9	ARIZ.	010-E(219)T	73	82	

010 PM 267

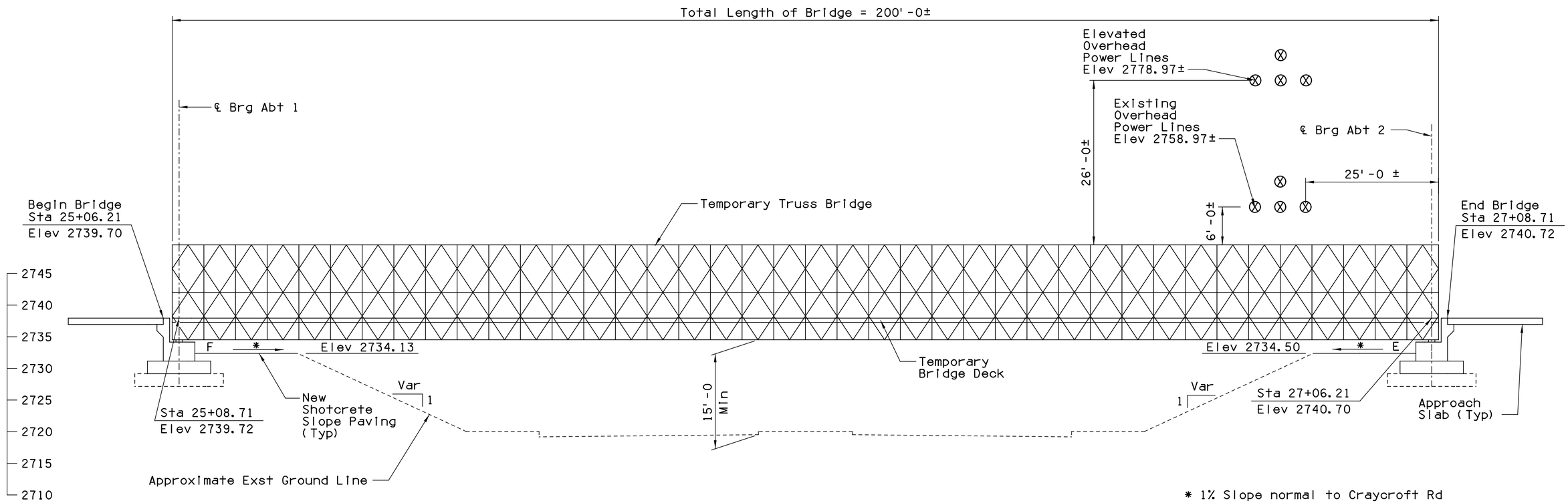

SECTION @ ℄ TEMPORARY BRIDGE

Scale: 1/8"=1'-0

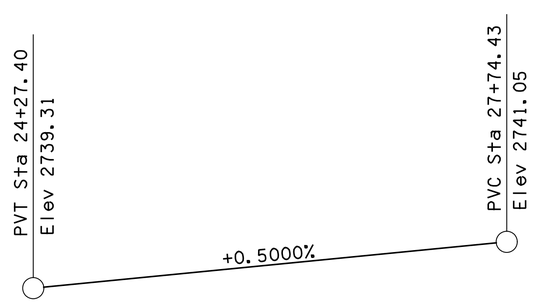

DETOUR PROFILE

Not to Scale

NOTE:

Dimensions of temporary bridge are approximate.
See Special Provisions for details.

	NAME	DATE
DESIGN	CLM/ZU	06/16
DRAWN	AJM	06/16
CHECKED	JRP	06/16

T.Y. LIN INTERNATIONAL
engineers | planners | scientists
60 E. Rio Salado Parkway, Suite 501
Tempe, Arizona 85281, Tel. 480-968-8814

ARIZONA DEPARTMENT OF TRANSPORTATION
INFRASTRUCTURE DELIVERY AND OPERATIONS DIVISION
BRIDGE GROUP

Sta 373 +
CRAYCROFT RD TI OP EB & WB
TEMPORARY BRIDGE ELEVATION

ROUTE	MILEPOST	STRUCTURE NO.	LOCATION
I-10	268.08	594 EB 595 WB	CRAYCROFT RD TI OP STR #594 & #595

Registered Professional Engineer (Civil) CERTIFICATE NO. 10970 JAMES R. PYNE Date Signed 06/16/16 ARIZONA, U.S.A. Expires 12/31/2018

DWG. S-1. 21 OF 28

TRACS NO. H 8774 01 C | 010-E(219)T | ___ OF ___

Workspace: H:\ustation\projects\221867.00 Craycroft - Wilmot.pcf | Plot Driver: H:\ustation\plotcfg\ADOT_PDF_FULL.pltl | Pentable: H:\ustation\plotcfg\pen\stdplot.tbl
SURVEY NO. | FINISHED PLANS- | REVISIONS- | SURVEY NO. | FINISHED PLANS- | REVISIONS- | LOCATION- | DATE-

amacias 1:11:42 PM 6/16/2016 T:\Tempe\Projects\221867.00\600_CADD\05_Official\Delv Files\Structures\Craycroft\Sealed Submittal\21s594el_Temp Bridge.dgn

F.H.W.A. REGION	STATE	PROJECT NO.	SHEET NO.	TOTAL SHEETS	RECORD DRAWING
9	ARIZ.	010-E(219)T	74	82	

010 PM 267

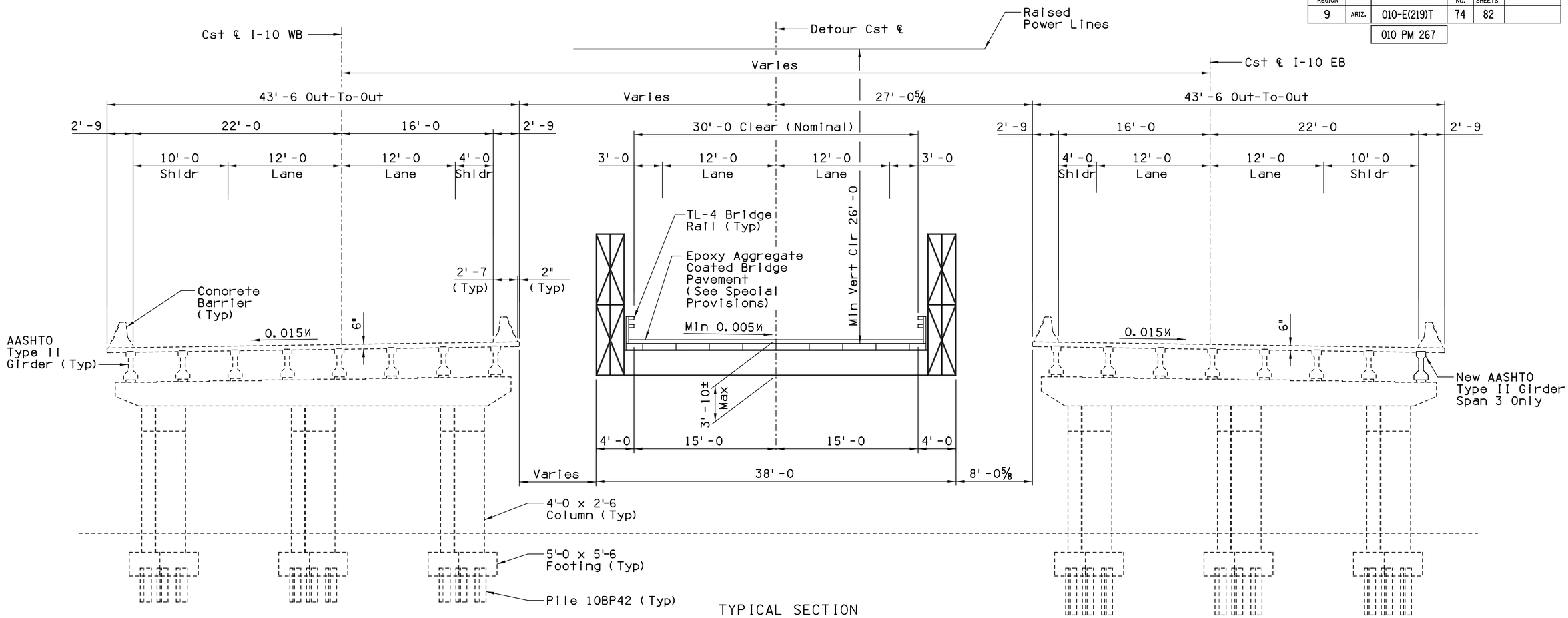

TYPICAL SECTION

Scale: 3/16" = 1'-0

CONSTRUCTION SEQUENCE NOTES:

1. Construct detour roadway, new abutments and approach slab in I-10 median and assemble the temporary bridge and launch or lift into place.
2. Refer to Special Provisions for the abutment monitoring.
3. Preload abutment foundation with 265 kip for 24 hr for each abutment. Jack and shim bridge as required, then complete backwall and approach slabs. See Special Provisions.
4. Move EB traffic onto temporary bridge.
5. Remove EB Bridge existing barriers, deck, approach slab and damaged girder.
6. Erect replacement girder, pour diaphragms, deck, barriers and approach slab, and place new striping.
7. Move EB traffic back to the newly constructed EB Bridge.
8. Survey abutments and jack and shim bridge as required.
9. Move WB traffic onto the temporary bridge.
10. Remove WB Bridge existing barriers, deck & approach slab.
11. Pour deck, approach slab and barriers.
12. Move WB traffic back to the newly constructed WB Bridge.
13. Disassemble the temporary bridge (abutments and wingwalls to remain).

	NAME	DATE
DESIGN	CLM/ZU	06/16
DRAWN	AJM	06/16
CHECKED	JRP	06/16

T·Y·LIN INTERNATIONAL
engineers | planners | scientists
60 E. Rio Salado Parkway, Suite 501
Tempe, Arizona 85281, Tel. 480-968-8814

ARIZONA DEPARTMENT OF TRANSPORTATION
INFRASTRUCTURE DELIVERY AND OPERATIONS DIVISION
BRIDGE GROUP

Sta 373 +
CRAYCROFT RD TI OP EB & WB
TEMP BRIDGE TYPICAL SECTION

I-10	268.08	594 EB 595 WB
ROUTE	MILEPOST	STRUCTURE NO.

LOCATION: CRAYCROFT RD TI OP STR #594 & #595

Registered Professional Engineer (Civil) 10970 JAMES R. PYNE Date Signed 06/16/16 ARIZONA, U.S.A. Expires 12/31/2018

DWG. S-1.22 OF 28

TRACS NO. H 8774 01 C | 010-E(219)T | ___ OF ___

Workspace: H:\sustain\projects\221867.00 Craycroft - Wilmot.pcf | Plot Driver: H:\sustain\plotcfg\ADOT_PDF_FULL.plt | Pentable: H:\sustain\plotcfg\pen\stdplot.tbl
SURVEY NO. | FINISHED PLANS- | REVISIONS- | LOCATION- | DATE-

amacias 1:12:05 PM 6/16/2016 T:\Tempe\Projects\221867.00\600_CADD\05_Official\Delv Files\Structures\Craycroft\Sealed Submittal\22s594xs_Temp Bridge.dgn

F.H.W.A. REGION	STATE	PROJECT NO.	SHEET NO.	TOTAL SHEETS	RECORD DRAWING
9	ARIZ.	010-E(219)T	75	82	

010 PM 267

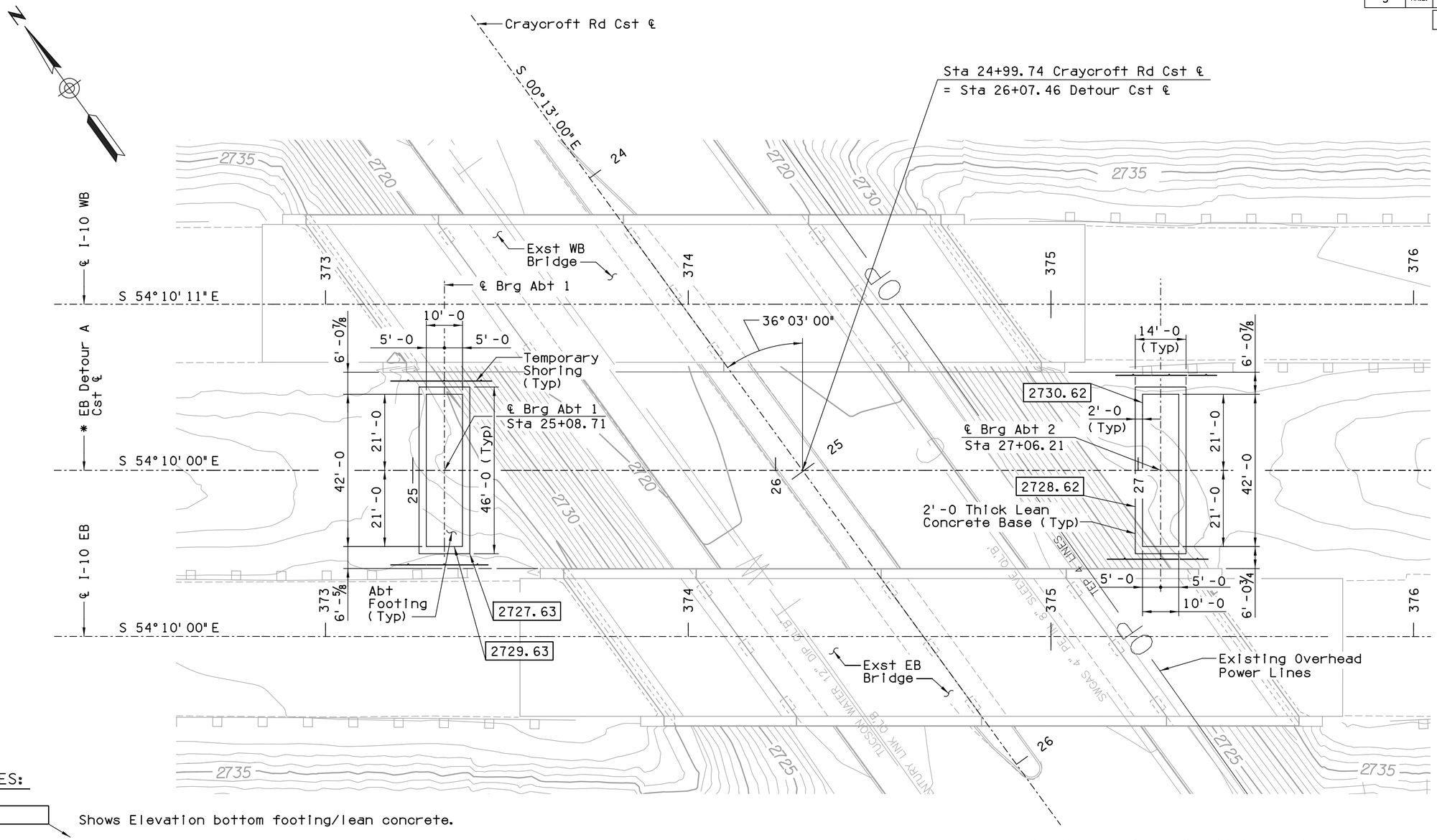

NOTES:

Shows Elevation bottom footing/lean concrete.

1. Refer To SD 5.01 & 5.02 For Abutment Excavation & Backfill limits.
2. Temporary shoring will be required to maintain integrity of existing abutment and roadway section.
3. Limit of lean concrete shall be neat lines. The base shall be scarified, moisture conditioned to within 2 percent of optimum moisture content (ASTM D698) and compacted to a minimum of 95 percent of their maximum dry density (ASTM D698). See Standard Specifications Section 305.
4. Existing contours shown.

* See Roadway Plans for WB Detour B.

TEMPORARY BRIDGE FOUNDATION PLAN

Scale: 1"=15'-0

	NAME	DATE
DESIGN	CLM/ZU	06/16
DRAWN	AJM	06/16
CHECKED	JRP	06/16

T·Y·LIN INTERNATIONAL
engineers | planners | scientists
60 E. Rio Salado Parkway, Suite 501
Tempe, Arizona 85281, Tel. 480-968-8814

ARIZONA DEPARTMENT OF TRANSPORTATION
INFRASTRUCTURE DELIVERY AND OPERATIONS DIVISION
BRIDGE GROUP

Sta 373 +
CRAYCROFT RD TI OP EB & WB
TEMP BRIDGE FOUNDATION PLAN

LOCATION: CRAYCROFT RD TI OP
STR #594 & #595

I-10	268.08	594 EB 595 WB
ROUTE	MILEPOST	STRUCTURE NO.

TRACS NO. H 8774 01 C | 010-E(219)T

Registered Professional Engineer (Civil) CERTIFICATE NO. 10970 JAMES R. PYNE Date Signed 06/16/16 ARIZONA, U.S.A. Expires 12/31/2018

DWG. S-1. 23 OF 28

___ OF ___

amacias 1:12:30 PM 6/16/2016 T:\Tempe\Projects\221867.00\600_CADD\05_Official\Delv Files\Structures\Craycroft\Sealed Submittal\23s594fp_Temp Bridge.dgn

Workspace: H:\sustain\projects\221867.00 Craycroft - Villmot.pcf | Plot Driver: H:\sustain\plotcfg\ADOT_PDF_FULL.plt | Pentable: H:\sustain\plotcfg\pen\stdplot.tbl
SURVEY NO. | FINISHED PLANS- | REVISIONS- | SURVEY NO. | FINISHED PLANS- | REVISIONS- | LOCATION- | DATE-

F.H.W.A. REGION	STATE	PROJECT NO.	SHEET NO.	TOTAL SHEETS	RECORD DRAWING
9	ARIZ.	010-E(219)T	76	82	
		010 PM 267			

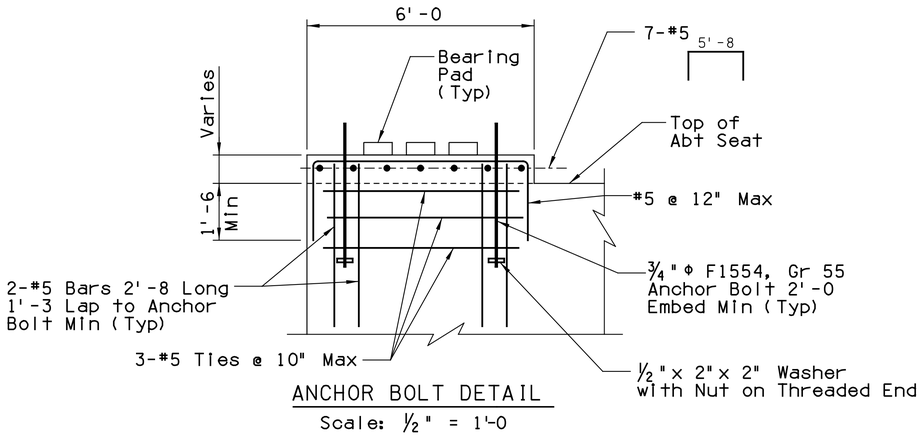

ANCHOR BOLT DETAIL

Scale: 1/2" = 1'-0

NOTE:

Minimum of 8 - 3/4"Φ anchor bolts per pedestal required by design. Number may vary per temporary bridge manufacture. Contractor shall furnish and install anchor bolts. The cost of anchor bolts and installation shall be paid under cost of Temporary Bridge Abutment.

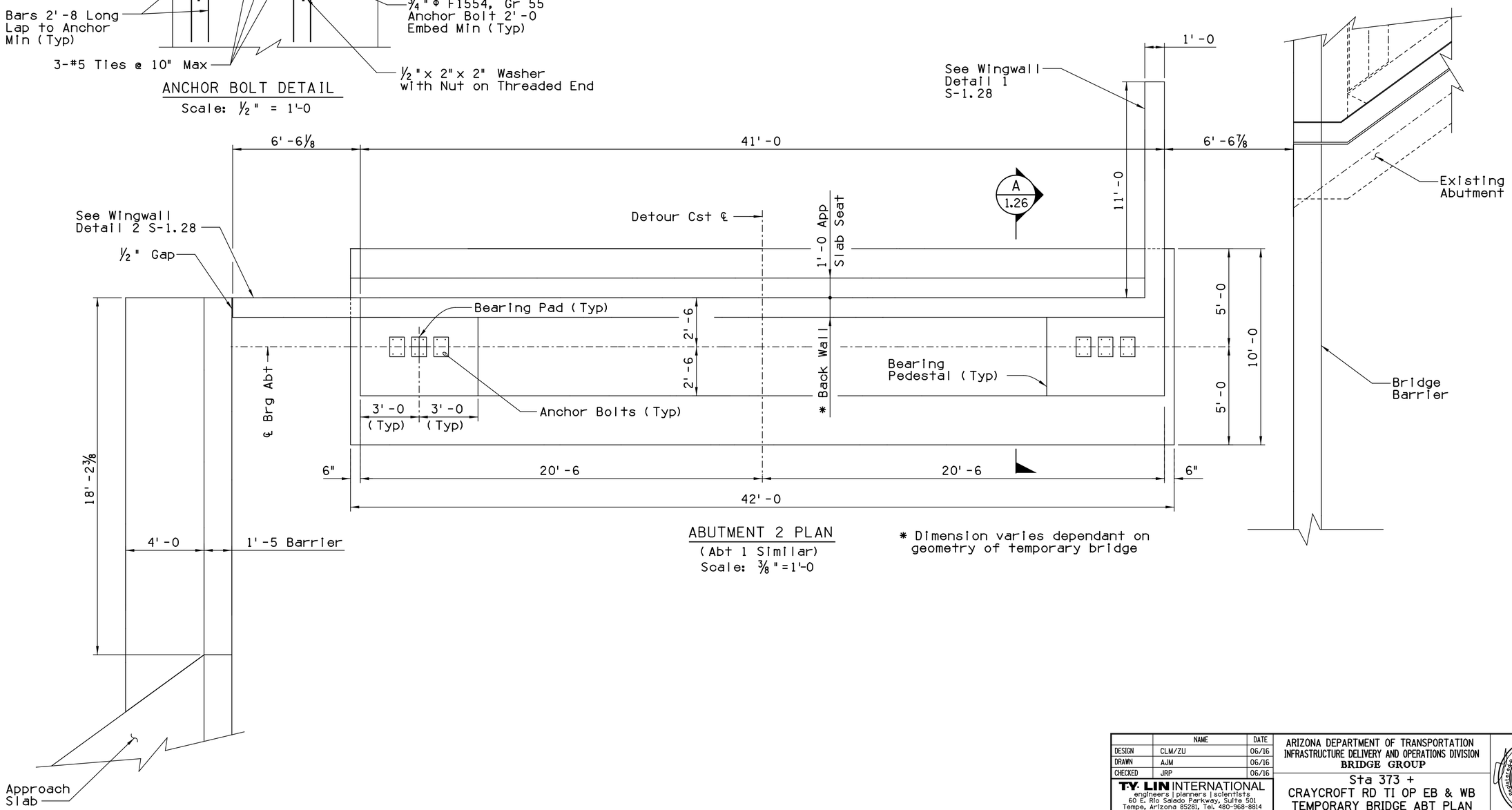

ABUTMENT 2 PLAN

(Abt 1 Similar)

Scale: 3/8" = 1'-0

* Dimension varies dependant on geometry of temporary bridge

	NAME	DATE
DESIGN	CLM/ZU	06/16
DRAWN	AJM	06/16
CHECKED	JRP	06/16

T·Y· LIN INTERNATIONAL
engineers | planners | scientists
60 E. Rio Salado Parkway, Suite 501
Tempe, Arizona 85281, Tel. 480-968-8814

I-10	268.08	594 EB 595 WB
ROUTE	MILEPOST	STRUCTURE NO.

ARIZONA DEPARTMENT OF TRANSPORTATION
INFRASTRUCTURE DELIVERY AND OPERATIONS DIVISION
BRIDGE GROUP

Sta 373 +
CRAYCROFT RD TI OP EB & WB
TEMPORARY BRIDGE ABT PLAN

LOCATION: CRAYCROFT RD TI OP
STR #594 & #595

Registered Professional Engineer (Civil) Certificate No. 10970 JAMES R. PYNE Date Signed 06/17/16 ARIZONA, U.S.A.
Expires 12/31/2018

DWG. S-1. 24 OF 28

TRACS NO. H 8774 01 C | 010-E(219)T | ___ OF ___

Workspace: H:\ustation\projects\221867.00 Craycroft - Willmot.pcf | Plot Driver: H:\ustation\plotcfg\ADOT_PDF_FULL.plt | Pentable: H:\ustation\plotcfg\pen\stdplot.tbl
SURVEY NO. | FINISHED PLANS- | REVISIONS- | LOCATION- | DATE-

amacias 1:12:53 PM 6/16/2016 T:\Tempe\Projects\221867.00\600_CADD\05_Official\Delv Files\Structures\Craycroft\Sealed Submittal\24s594pl_TempBridge.dgn

F.H.W.A. REGION	STATE	PROJECT NO.	SHEET NO.	TOTAL SHEETS	RECORD DRAWING
9	ARIZ.	010-E(219)T	77	82	

010 PM 267

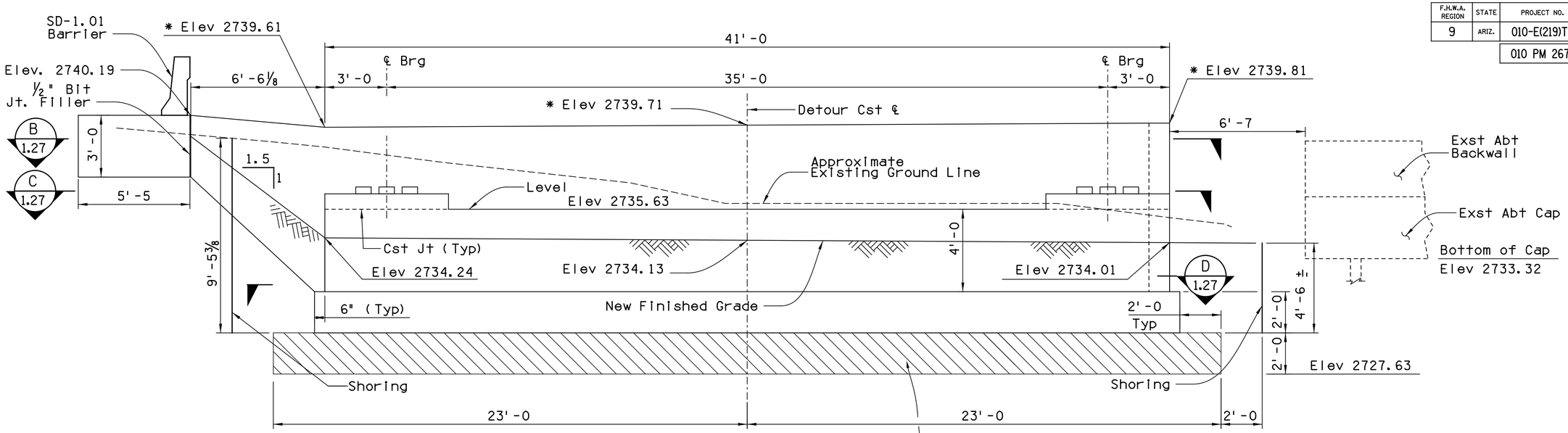

* Elevations at FF backwall

ABUTMENT 1 ELEVATION
(Looking Downstation)
Scale: ⅜"=1'-0

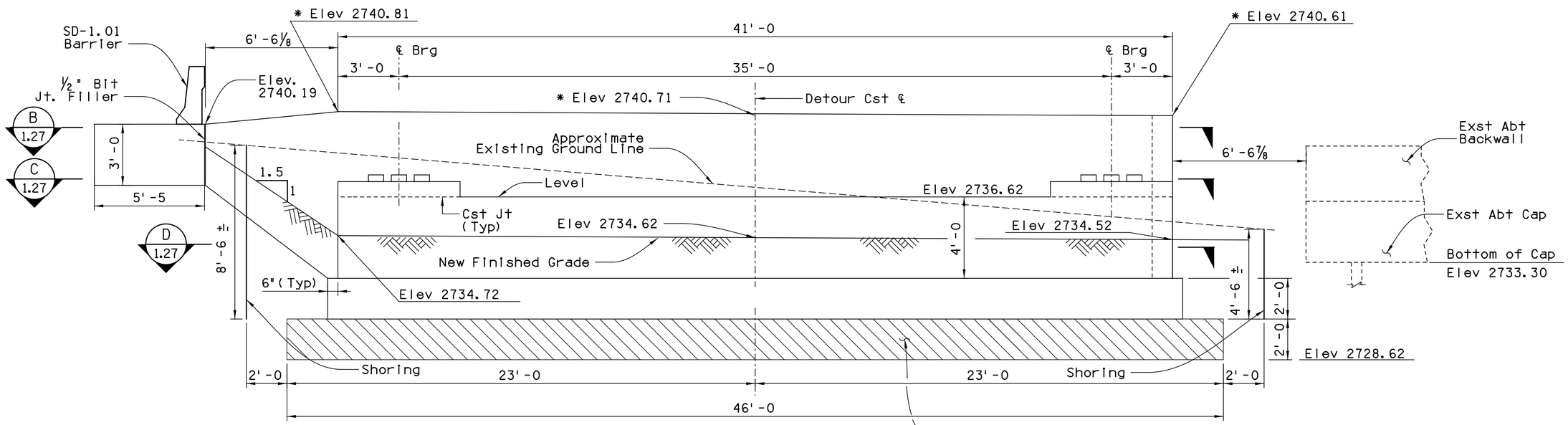

* Elevations at FF backwall

ABUTMENT 2 ELEVATION
(Looking Upstation)
Scale: ⅜"=1'-0

	NAME	DATE
DESIGN	CLM/ZU	06/16
DRAWN	AJM	06/16
CHECKED	JRP	06/16

T·Y·LIN INTERNATIONAL
engineers | planners | scientists
60 E. Rio Salado Parkway, Suite 501
Tempe, Arizona 85281, Tel. 480-968-8814

ARIZONA DEPARTMENT OF TRANSPORTATION
INFRASTRUCTURE DELIVERY AND OPERATIONS DIVISION
BRIDGE GROUP

Sta 373 +
CRAYCROFT RD TI OP EB & WB
TEMPORARY BRIDGE ABT ELEVATION

I-10	268.08	594 EB 595 WB
ROUTE	MILEPOST	STRUCTURE NO.

LOCATION: CRAYCROFT RD TI OP STR #594 & #595

Registered Professional Engineer (Civil) CERTIFICATE NO. 10970 JAMES R. PYNE Date Signed 06/16/16 ARIZONA, U.S.A. Expires 12/31/2018

DWG. S-1. 25 OF 28

TRACS NO. H 8774 01 C | 010-E(219)T | ___ OF ___

Workspace: H:\ustation\projects\221867.00 Craycroft - Willmot.pcf | Plot Driver: H:\ustation\plotcfg\ADOT_PDF_FULL.plt | Pentable: H:\ustation\plotcfg\pen\stdplot.tbl
SURVEY NO. | FINISHED PLANS- | REVISIONS- | LOCATION- | DATE-

amacias 1:13:19 PM 6/16/2016 T:\Tempe\Projects\221867.00\600_CADD\05_Official\Delv Files\Structures\Craycroft\Sealed Submittal\25s594el_TempBridge.dgn

F.H.W.A. REGION	STATE	PROJECT NO.	SHEET NO.	TOTAL SHEETS	RECORD DRAWING
9	ARIZ.	010-E(219)T	78	82	
		010 PM 267			

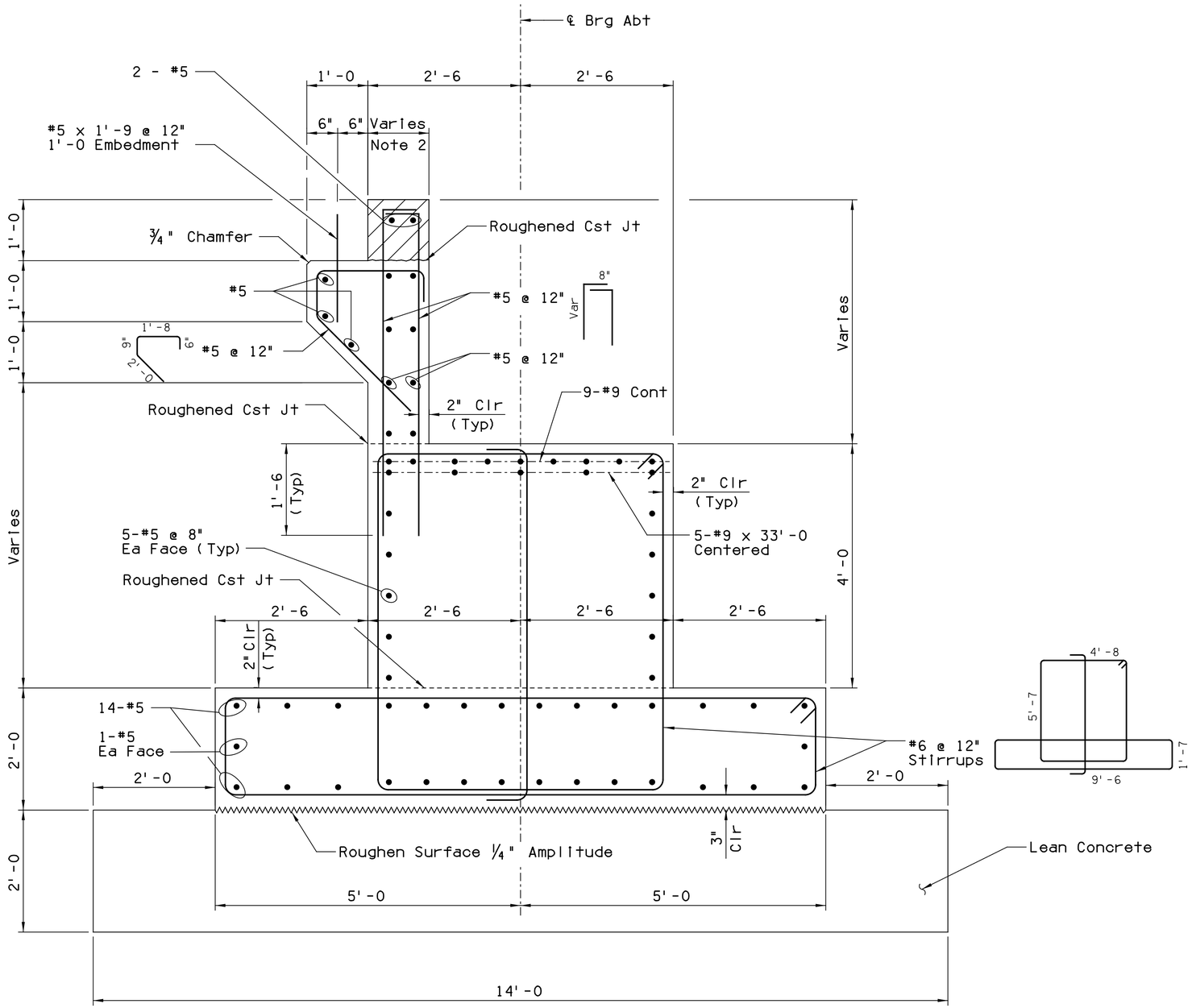

SECTION A 1.24

Scale: 1" = 1'-0

NOTES:

1. Hatched area to be cast after survey shots taken and bridge jacked & shimmed if required.
2. Dimension dependant on exact temporary bridge dimensions.

	NAME	DATE
DESIGN	CLM/ZU	06/16
DRAWN	AJM	06/16
CHECKED	JRP	06/16

T·Y·LIN INTERNATIONAL
engineers | planners | scientists
60 E. Rio Salado Parkway, Suite 501
Tempe, Arizona 85281, Tel. 480-968-8814

ARIZONA DEPARTMENT OF TRANSPORTATION
INFRASTRUCTURE DELIVERY AND OPERATIONS DIVISION
BRIDGE GROUP

Sta 373 +
CRAYCROFT RD TI OP EB & WB
TEMP BRIDGE ABUTMENT DETAILS 1

ROUTE	MILEPOST	STRUCTURE NO.	LOCATION
I-10	268.08	594 EB 595 WB	CRAYCROFT RD TI OP STR #594 & #595

Registered Professional Engineer (Civil) CERTIFICATE NO. 10970 JAMES R. PYNE Date Signed 06/16/16 ARIZONA, U.S.A. Expires 12/31/2018

DWG. S-1. 26 OF 28

TRACS NO. H 8774 01 C | 010-E(219)T | ___ OF ___

Workspace: H:\ustation\projects\221867.00 Craycroft - Wilmot.pcf | Plot Driver: H:\ustation\plotcfg\ADOT_PDF_FULL.plt | Pentable: H:\ustation\plotcfg\open\stdplot.tbl
SURVEY NO. | FINISHED PLANS- | REVISIONS- | SURVEY NO. | FINISHED PLANS- | REVISIONS- | LOCATION- | DATE-

amacias 1:13:43 PM 6/16/2016 T:\Tempe\Projects\221867.00\600_CADD\05_Official\Delv Files\Structures\Craycroft\Sealed Submittal\26s594ad1_Temp Bridge.dgn

F.H.W.A. REGION	STATE	PROJECT NO.	SHEET NO.	TOTAL SHEETS	RECORD DRAWING
9	ARIZ.	010-E(219)T	79	82	

010 PM 267

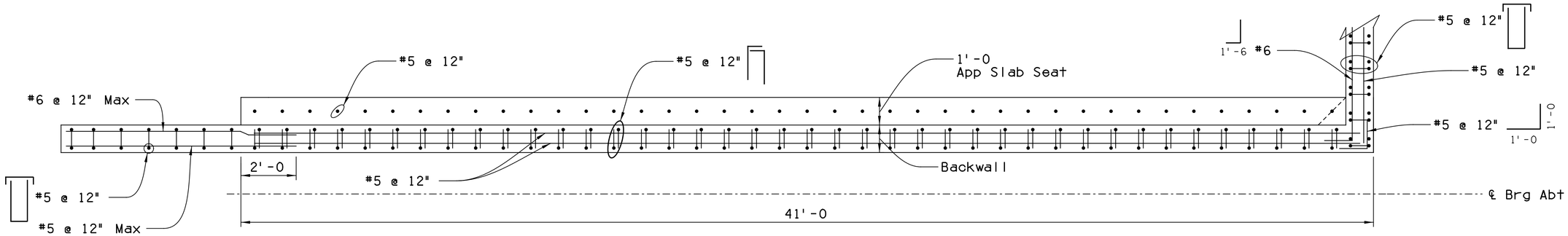

SECTION B 1.25
Scale: ½" = 1'-0

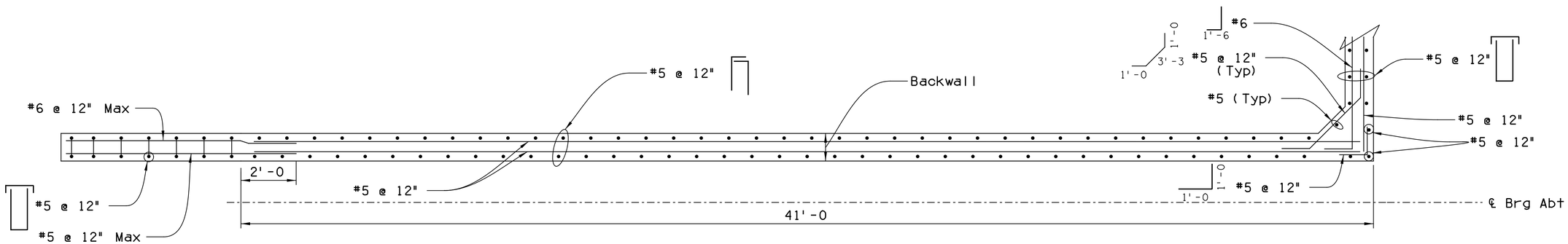

SECTION C 1.25
Scale: ½" = 1'-0

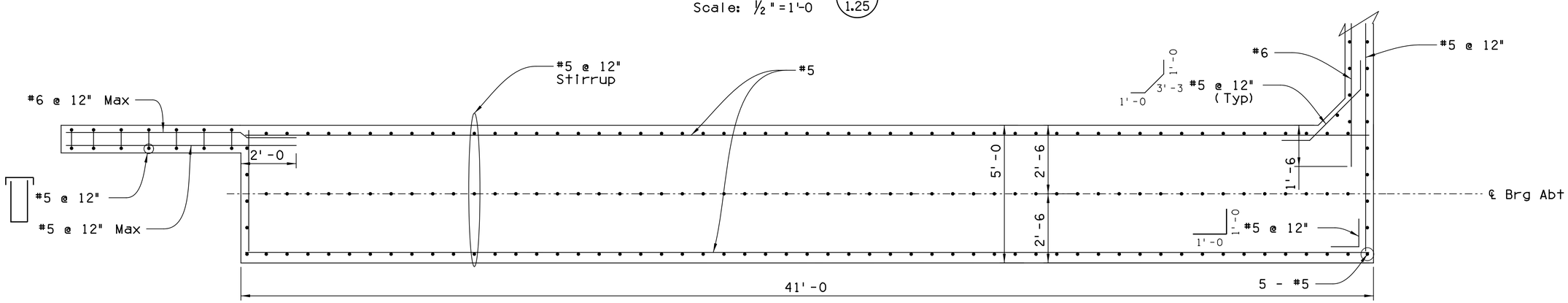

SECTION D 1.25
Scale: ½" = 1'-0

	NAME	DATE
DESIGN	CLM/ZU	06/16
DRAWN	AJM	06/16
CHECKED	JRP	06/16

T.Y. LIN INTERNATIONAL
engineers | planners | scientists
60 E. Rio Salado Parkway, Suite 501
Tempe, Arizona 85281, Tel. 480-968-8814

ARIZONA DEPARTMENT OF TRANSPORTATION
INFRASTRUCTURE DELIVERY AND OPERATIONS DIVISION
BRIDGE GROUP

Sta 373 +
CRAYCROFT RD TI OP EB & WB
TEMP BRIDGE ABUTMENT DETAILS 2

LOCATION
CRAYCROFT RD TI OP
STR #594 & #595

ROUTE	MILEPOST	STRUCTURE NO.
I-10	268.08	594 EB 595 WB

Registered Professional Engineer (Civil)
CERTIFICATE NO. 10970
JAMES R. PYNE
Date Signed 06/16/16
ARIZONA, U.S.A.
Expires 12/31/2018

DWG. S-1. 27 OF 28

TRACS NO. H 8774 01 C | 010-E(219)T | ___ OF ___

Workspace: H:\ustation\projects\221867.00 Craycroft - Wilmot.pcf | Plot Driver: H:\ustation\plotcfg\ADOT_PDF_FULL.pll | Pentable: H:\ustation\plotcfg\pen\stdplot.tbl
SURVEY NO. | FINISHED PLANS- | REVISIONS- | LOCATION- | DATE-

amacias 1:14:05 PM 6/16/2016 T:\Tempe\Projects\221867.00\600_CADD\05_Official\Delv Files\Structures\Craycroft\Sealed Submittal\27s594ad2_Temp Bridge.dgn

F.H.W.A. REGION	STATE	PROJECT NO.	SHEET NO.	TOTAL SHEETS	RECORD DRAWING
9	ARIZ.	010-E(219)T	80	82	

010 PM 267

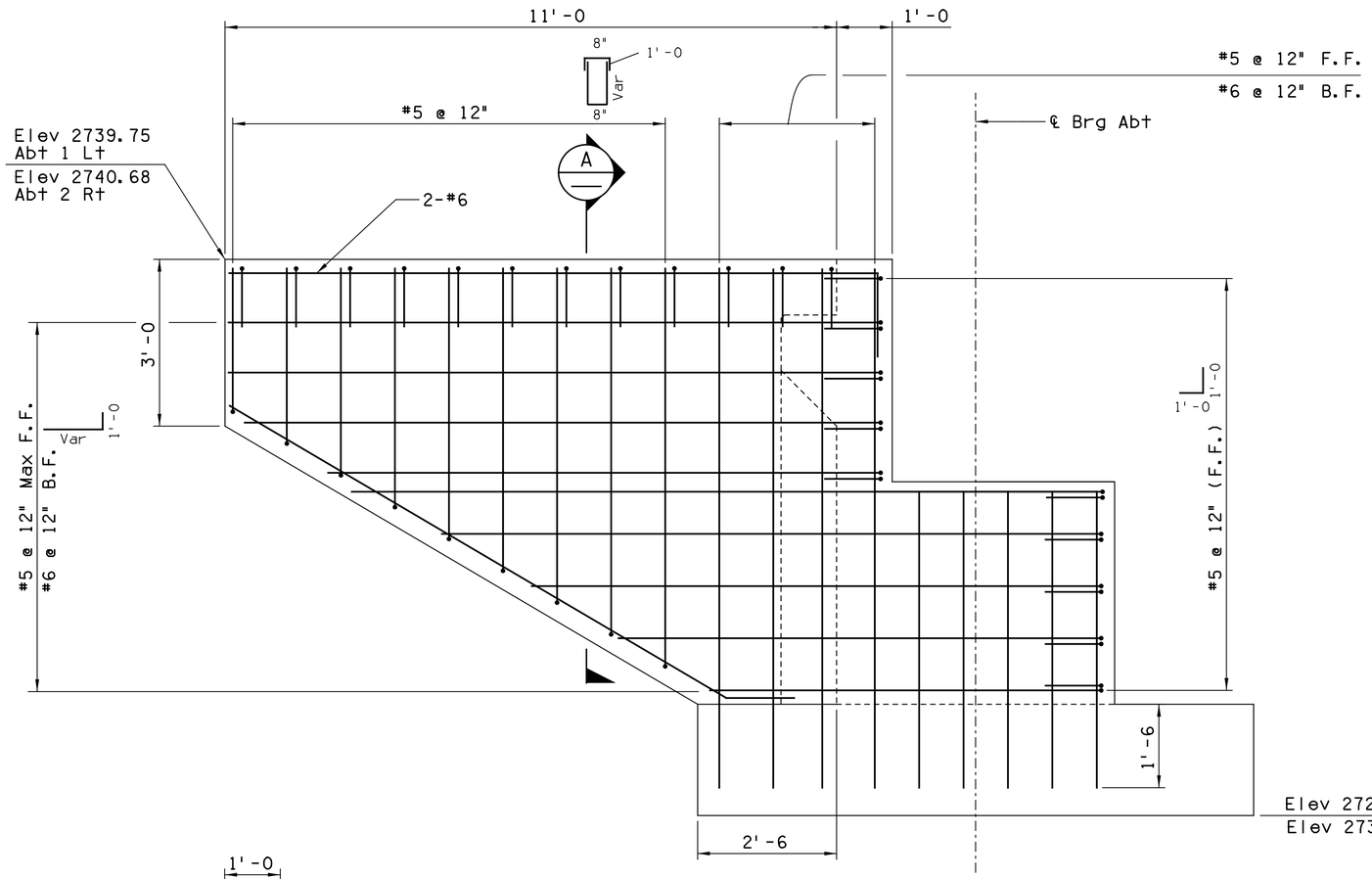

WINGWALL DETAIL 1

(Front Face Reinf Shown)
Scale: 3/4"=1'-0

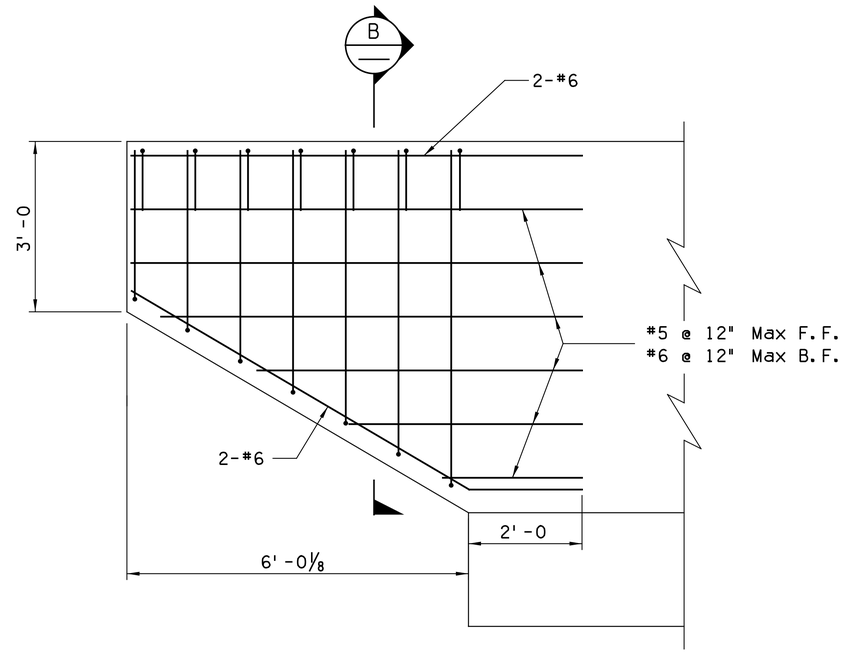

WINGWALL DETAIL 2

(Front Face Reinf Shown)
Scale: 3/4"=1'-0

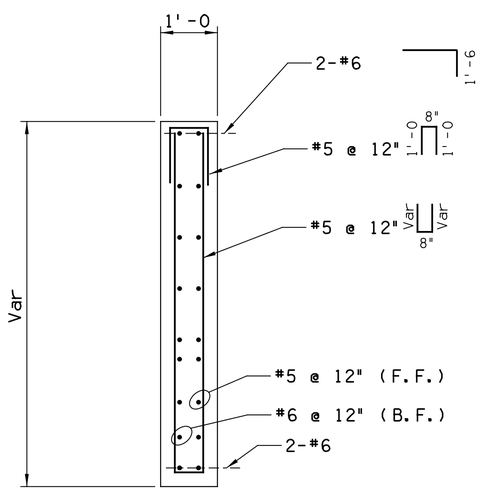

SECTION A
Scale: 3/4"=1'-0

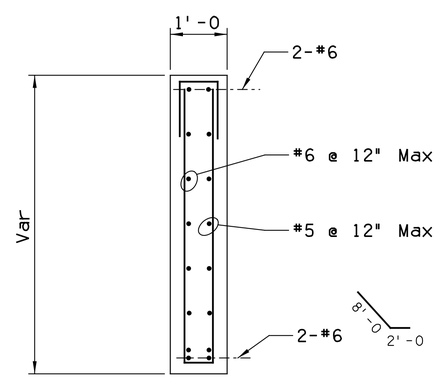

SECTION B
Scale: 3/4"=1'-0

	NAME	DATE
DESIGN	CLM/ZU	06/16
DRAWN	AJM	06/16
CHECKED	JRP	06/16

T·Y· LIN INTERNATIONAL
engineers | planners | scientists
60 E. Rio Salado Parkway, Suite 501
Tempe, Arizona 85281, Tel. 480-968-8814

ARIZONA DEPARTMENT OF TRANSPORTATION
INFRASTRUCTURE DELIVERY AND OPERATIONS DIVISION
BRIDGE GROUP

Sta 373 +
CRAYCROFT RD TI OP EB & WB
TEMP BRIDGE WINGWALL DETAILS

I-10	268.08	594 EB 595 WB
ROUTE	MILEPOST	STRUCTURE NO.

LOCATION: CRAYCROFT RD TI OP STR #594 & #595

Registered Professional Engineer (Civil)
CERTIFICATE NO. 10970
JAMES R. PYNE
Date Signed 06/16/16
ARIZONA, U.S.A.
Expires 12/31/2018

DWG. S-1. 28 OF 28

TRACS NO. H 8774 01 C | 010-E(219)T | ___ OF ___

Pentable: H:\ustation\plotcfg\pen\stdplot.tbl | Plot Driver: H:\ustation\plotcfg\ADOT_PDF_FULL.pdf | Workspace: H:\ustation\projects\221867.00 Craycroft - Villmot.pcf
SURVEY NO. | FINISHED PLANS- | REVISIONS- | LOCATION- | DATE-

amacias 1:14:51 PM 6/16/2016 T:\Tempe\Projects\221867.00\600_CADD\05_Official\Delv Files\Structures\Craycroft\Sealed Submittal\28s594wd_Temp Bridge.dgn

F.H.W.A. REGION	STATE	PROJECT NO.	SHEET NO.	TOTAL SHEETS	RECORD DRAWING
9	ARIZ.	010-E(219)T	81	82	

010 PM 267

GENERAL NOTES:

1. General soil strata descriptions and indicated boundaries are based on engineering interpretation of available subsurface information by the geotechnical Engineer and may not reflect actual variation in subsurface conditions between borings and samples. The locations of contacts between strata shown on the logs are generally approximate, and change between material types may be gradual rather than abrupt. Classification of soil materials is in general accordance with ASTM D 2488 and is based on field observation unless accompanied by mechanical analysis presented in the Structures Geotechnical Engineering Report.

2. The observed water levels and/or moisture conditions indicated on the boring logs are as recorded at the time of exploration. These water levels and/or moisture conditions may vary considerably with time according to the prevailing climate, rainfall or other factors and are otherwise dependent upon the duration of and methods used in the exploration program.

3. Sound engineering judgment was exercised in preparing the subsurface information presented on these sheets. This information was prepared and is intended for design and estimate purposes. Its presentation on the plans or elsewhere is for the purpose of providing intended users with access to the same information as the State and its designers. This subsurface information interpretation is presented in good faith and is not intended as a substitute for personal investigation, independent interpretations or judgment of the contractor.

4. A 140 lb hammer 30 inch free-fall was used to drive both the 2 inch O. D. Standard Penetration Test (SPT) split-spoon sampler (ASTM D 1586) and the 3 inch O. D. ring-lined sampler.

5. For further information refer to the STRUCTURES GEOTECHNICAL ENGINEERING REPORT, I-10 Temporary Bridge at Craycroft Road; Tucson, Arizona; ADOT Tracs No. 010 PM 267 H8774 01C; Terracon Project No. 65155090; dated pending.

6. All geotechnical/foundation reports prepared for this project shall be considered by the contractor in developing bid documents.

LOCATION PLAN

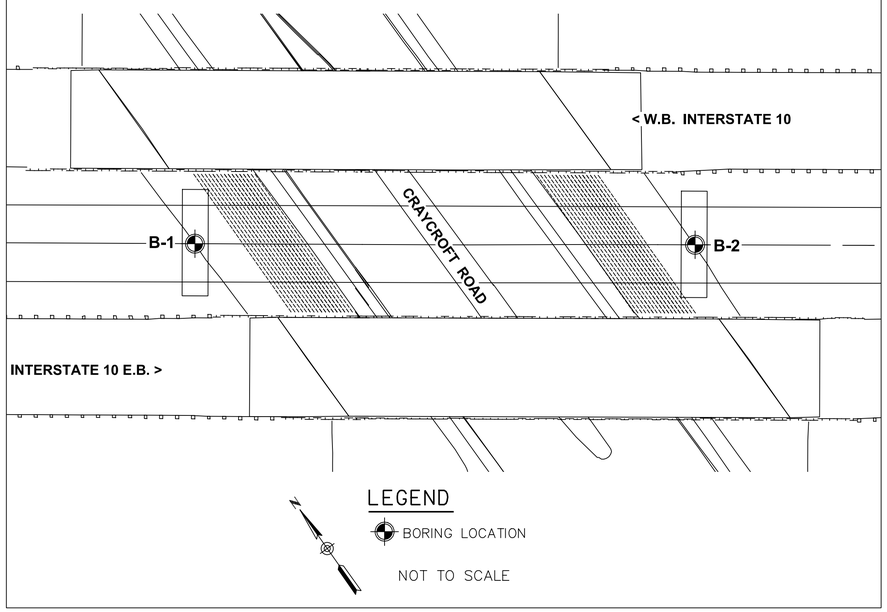

LOG OF SYMBOLS:

AUGER CUTTINGS

STANDARD PENETRATION TEST

MODIFIED DAMES & MOORE RING SAMPLER

	NAME	DATE
DESIGN	RP	06/16
DRAWN	KLJ	06/16
CHECKED	DRC	06/16

Terracon

ARIZONA DEPARTMENT OF TRANSPORTATION
INFRASTRUCTURE DELIVERY AND OPERATIONS DIVISION
BRIDGE GROUP

Sta 373 +
CRAYCROFT RD TI OP EB & WB
FOUNDATION DATA SHEET 1

I-10	268.08	594 EB 595 WB
ROUTE	MILEPOST	STRUCTURE NO.

LOCATION: CRAYCROFT RD TI OP STR #594 & #595

Registered Professional Engineer (Civil) 43838 RAMON PADILLA Date Signed 06/16/16 ARIZONA, U.S.A. Expires 3-31-2018

DWG NO. SF-1.01

TRACS NO. H 8774 01 C | 010-E(219)T | ___ OF ___

Workspace: H:\sustain\projects\221867.00 Craycroft - Willmot.pcf | Plot Driver: H:\sustain\plotcfg\ADOT_PDF_FULL.pll | Pentable: H:\sustain\plotcfg\pen\stdplot.tbl
SURVEY NO. | FINISHED PLANS- | REVISIONS- | LOCATION- | DATE-
amacias 1:17:35 PM 6/16/2016 T:\Tempe\Projects\221867.00\600_CADD\05_Official\Delv Files\Structures\Craycroft\Sealed Submittal\H8774_SF-1.01.dgn

F.H.W.A. REGION	STATE	PROJECT NO.	SHEET NO.	TOTAL SHEETS	RECORD DRAWING
9	ARIZ.	010-E(219)T	82	82	
		010 PM 267			

BORING LOG NO. B1

Page 1 of 1

PROJECT: I-10 Temporary Bridge at Craycroft Road

CLIENT: T.Y. Lin International, Inc.

SITE: Interstate 10 and Craycroft Road, Tucson, Arizona

LOCATION See Exhibit A-1
Latitude: 32.125446° Longitude: -110.875434°
Surface Elev.: 2736 (Ft.)

DEPTH	ELEVATION (Ft.)	Description	DEPTH (Ft.)	SAMPLE TYPE	FIELD TEST RESULTS	WATER CONTENT (%)	DRY UNIT WEIGHT (pcf)	ATTERBERG LIMITS LL-PL-PI	PERCENT FINES
		FILL – CLAYEY SAND (SC), trace gravel, brown to light brown, dense			36-50/5"	5	121	36-18-18	31
			5		14-19-18 N=37				
		medium dense	10		21-27	7	117		
			15		8-13-13 N=26				
		ring sample disturbed	20		14-20	9	95		
24.0	2712	CLAYEY SAND (SC), brown to light brown, dense, weak cementation	25		13-27-29 N=56				
28.0	2708	SILTY SAND (SM), trace gravel, brown, medium dense, stratified with poorly graded sand	30		14-21	2	115		
			35		11-13-14 N=27				
42.0	2694	CLAYEY SAND (SC), brown to dark brown, medium dense to dense, weak cementation, stratified with sandy clay	40		17-34	2	111		
			45		7-10-15 N=25				
			50		7-14-16 N=30	16			
55.5	2680.5	Boring Terminated at 55.5 Feet<<C>>	55		3-7-11 N=18				

Stratification lines are approximate. In-situ, the transition may be gradual. Hammer Type: Automatic

Advancement Method: hollow stem auger

Abandonment Method: Borings backfilled with soil cuttings upon completion.

See Exhibit A-4 for description of field procedures
See Appendix B for description of laboratory procedures and additional data (if any).
See Appendix A for explanation of symbols and abbreviations.
Elevations were interpolated from 60% plans.

Notes:

WATER LEVEL OBSERVATIONS
Groundwater not encountered

Terracon, 4685 South Ash Avenue, Suite H-4, Tempe, AZ 85282

Boring Started: 2/5/2016 | Boring Completed: 2/5/2016
Drill Rig: CME-75 | Driller: Southlands Engineering
Project No.: 65155090 | Exhibit: A-5

THIS BORING LOG IS NOT VALID IF SEPARATED FROM ORIGINAL REPORT. GEO SMART LOG-NO WELL 65155090.GPJ TERRACON2015.GDT 5/4/16

BORING LOG NO. B2

Page 1 of 1

PROJECT: I-10 Temporary Bridge at Craycroft Road

CLIENT: T.Y. Lin International, Inc.

SITE: Interstate 10 and Craycroft Road, Tucson, Arizona

LOCATION See Exhibit A-1
Latitude: 32.125094° Longitude: -110.874809°
Surface Elev.: 2737 (Ft.)

DEPTH	ELEVATION (Ft.)	Description	DEPTH (Ft.)	SAMPLE TYPE	FIELD TEST RESULTS	WATER CONTENT (%)	DRY UNIT WEIGHT (pcf)	ATTERBERG LIMITS LL-PL-PI	PERCENT FINES
		FILL – CLAYEY SAND (SC), trace gravel, light brown, dense			15-18-19 N=37			34-18-16	33
			5		21-20	6	110		
			10		12-21-19 N=40				
		medium dense	15		13-14	9	121		
			20		10-10-8 N=18				
22.0	2715	SANDY LEAN CLAY (CL), light brown, very stiff, no to weak cementation	25		11-21	7	112		
27.0	2710	SILTY SAND (SM), trace gravel, brown, dense, stratified with poorly graded sand	30		11-15-16 N=31				
		medium dense, stratified with clayey sand	35		11-21	4	110		
43.0	2694	SANDY LEAN CLAY (CL), light brown, very stiff	40		13-18-20 N=38				
			45		13-21	13	110		
			50		10-16-19 N=35				
55.5	2681.5	Boring Terminated at 55.5 Feet<<C>>	55		6-10-12 N=22	10			

Stratification lines are approximate. In-situ, the transition may be gradual. Hammer Type: Automatic

Advancement Method: hollow stem auger

Abandonment Method: Borings backfilled with soil cuttings upon completion.

See Exhibit A-4 for description of field procedures
See Appendix B for description of laboratory procedures and additional data (if any).
See Appendix A for explanation of symbols and abbreviations.
Elevations were interpolated from 60% plans.

Notes:

WATER LEVEL OBSERVATIONS
Groundwater not encountered

Terracon, 4685 South Ash Avenue, Suite H-4, Tempe, AZ 85282

Boring Started: 2/5/2016 | Boring Completed: 2/5/2016
Drill Rig: CME-75 | Driller: Southlands Engineering
Project No.: 65155090 | Exhibit: A-6

THIS BORING LOG IS NOT VALID IF SEPARATED FROM ORIGINAL REPORT. GEO SMART LOG-NO WELL 65155090.GPJ TERRACON2015.GDT 5/4/16

LOCATION PLAN

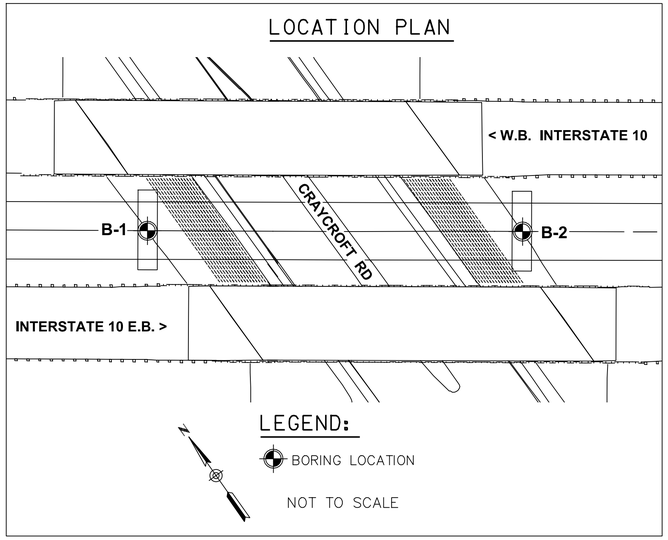

	NAME	DATE
DESIGN	RP	06/16
DRAWN	KLJ	06/16
CHECKED	DRC	06/16

Terracon

ARIZONA DEPARTMENT OF TRANSPORTATION
INFRASTRUCTURE DELIVERY AND OPERATIONS DIVISION
BRIDGE GROUP

Sta 373 +
CRAYCROFT RD TI OP EB & WB
FOUNDATION DATA SHEET 2

ROUTE	MILEPOST	STRUCTURE NO.	LOCATION
I-10	268.08	594 EB 595 WB	CRAYCROFT RD TI OP STR #594 & #595

Registered Professional Engineer (Civil) 43838 RAMON PADILLA Date Signed 06/16/16 ARIZONA, U.S.A. Expires 3-31-2018

DWG NO. SF-1.02

TRACS NO. H 8774 01 C | 010-E(219)T | ___ OF ___

Workspace: H:\sustain\projects\221867.00 Craycroft - Wilmot.pcf | SURVEY NO. | FINISHED PLANS- | REVISIONS-
Pentable: H:\sustain\plotcfg\pen\stdplot.tbl | Plot Driver: H:\sustain\plotcfg\ADOT_PDF_FULL.pll | SURVEY NO. | FINISHED PLANS- | REVISIONS- | LOCATION- | DATE-