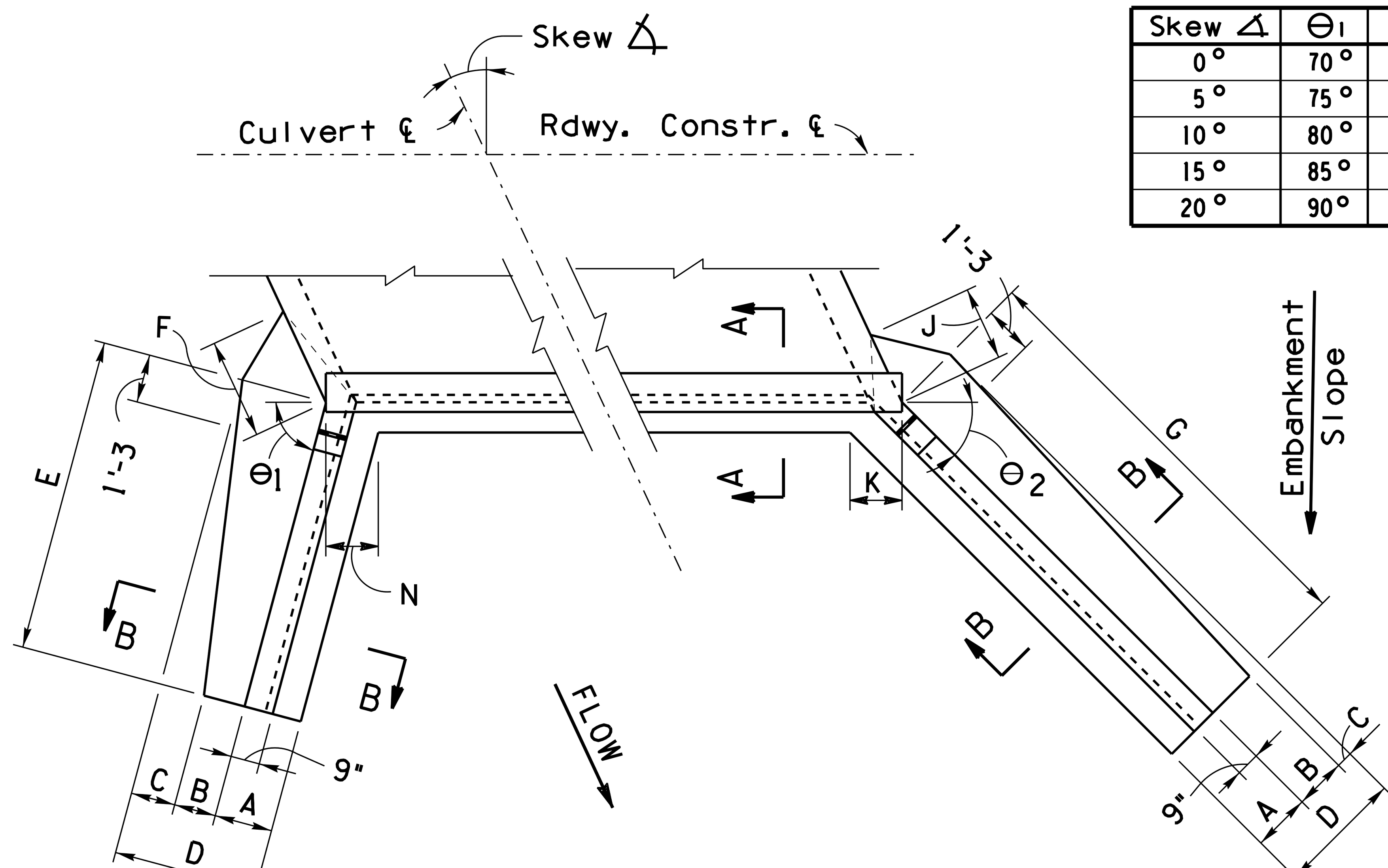

PLAN

Skew ∡	Θ1	Θ2
0°	70°	70°
5°	75°	65°
10°	80°	60°
15°	85°	55°
20°	90°	50°

NOTE:

For SECTION A-A, see SD 6.01 (1 of 5).

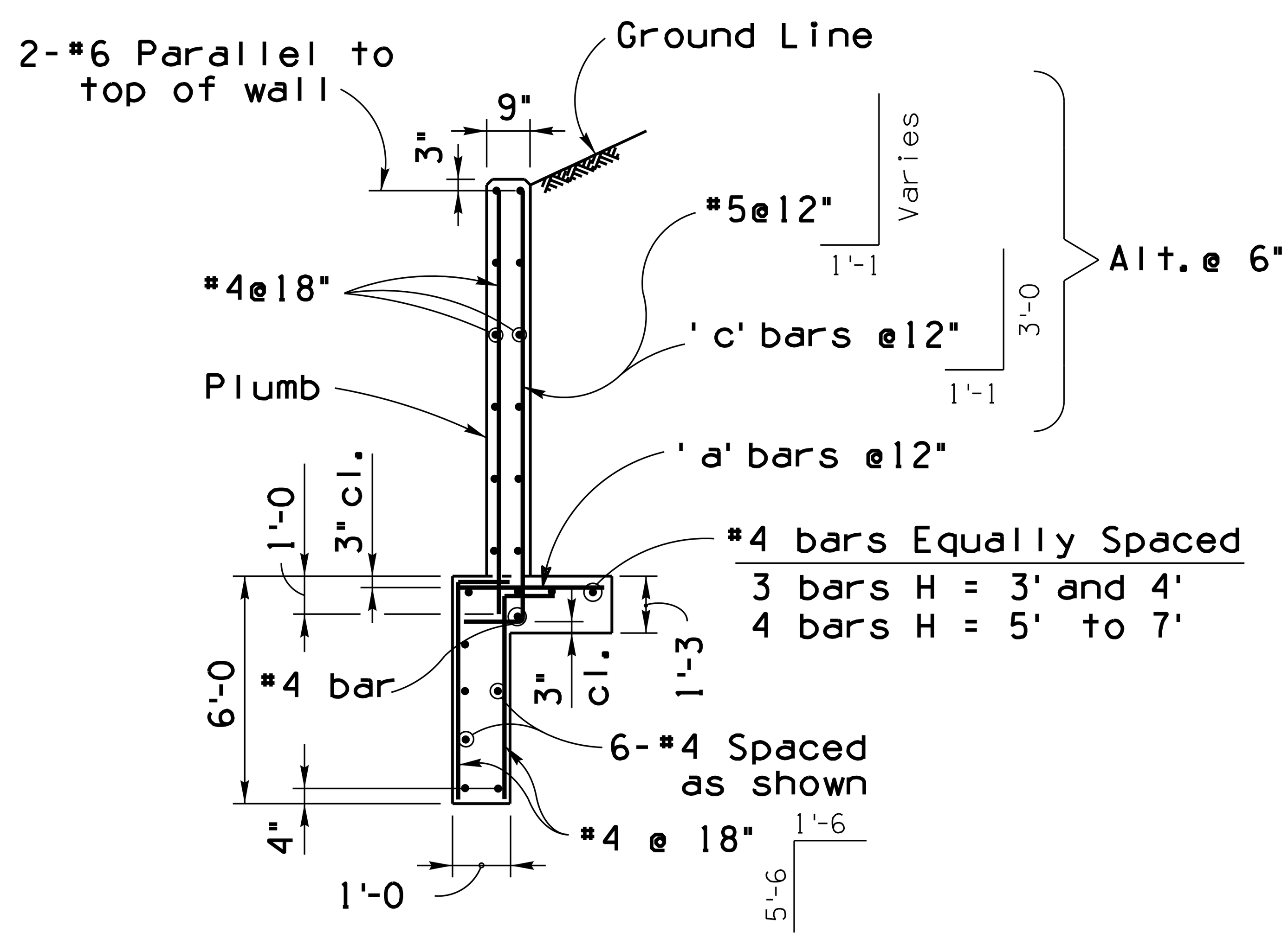

SECTION B-B

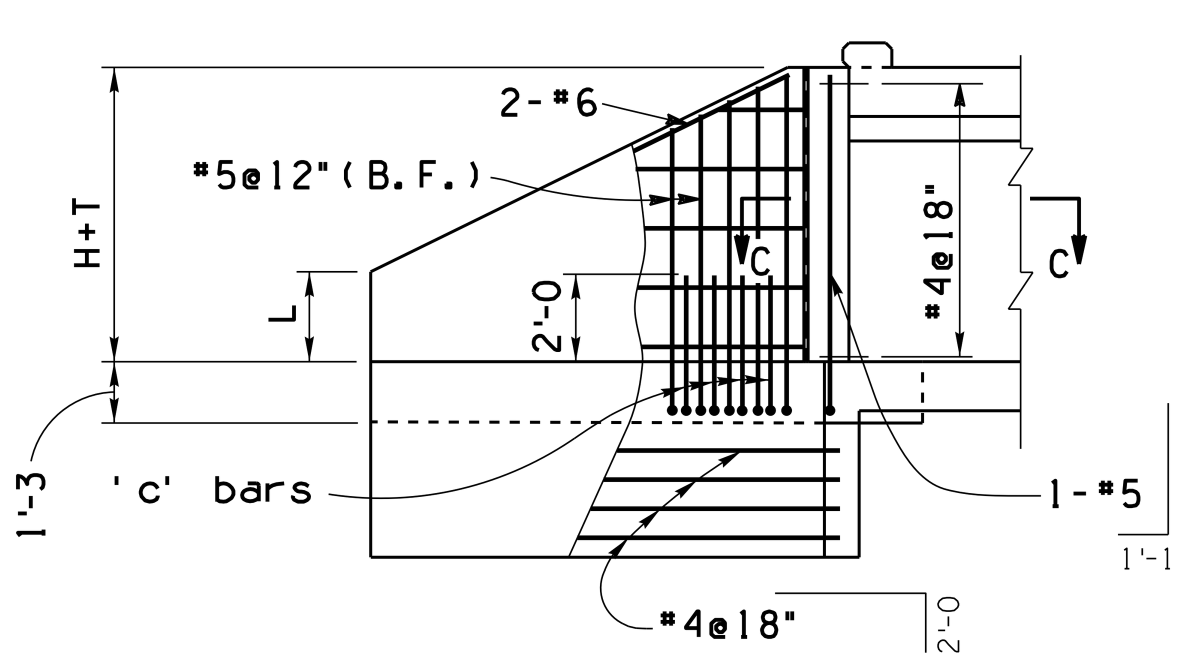

SHORT WING ELEVATION

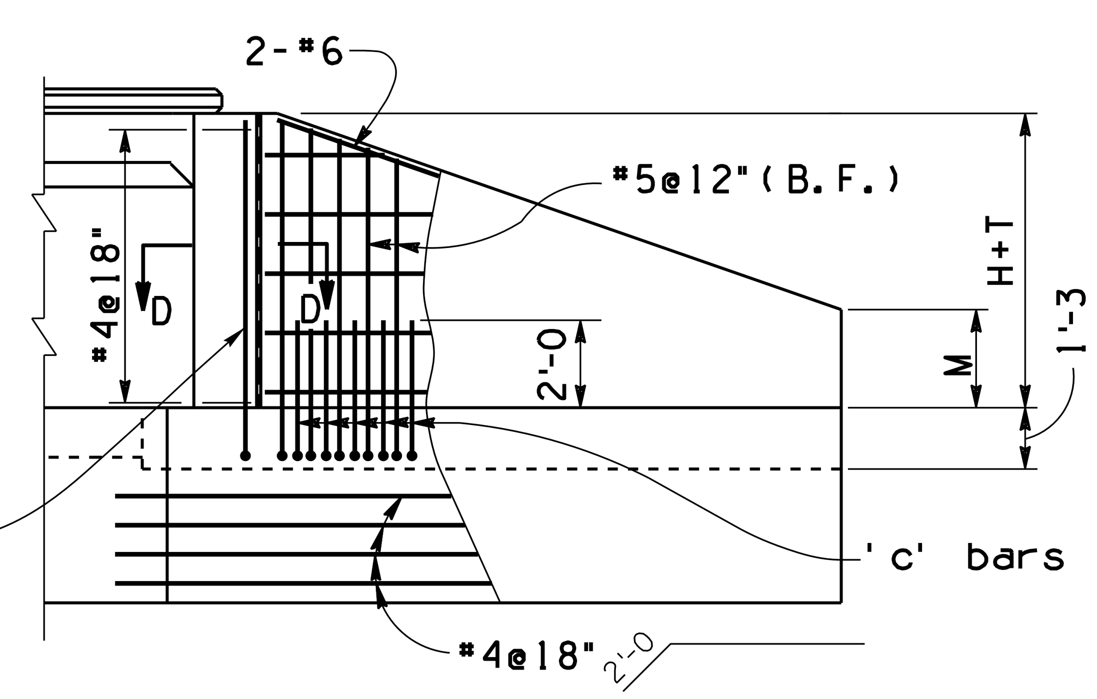

LONG WING ELEVATION

2 : 1 Slope — Dimensions

Skew ∡	0°					5°					10°					15°					20°				
Height H	3'	4'	5'	6'	7'	3'	4'	5'	6'	7'	3'	4'	5'	6'	7'	3'	4'	5'	6'	7'	3'	4'	5'	6'	7'
A	1'-6	1'-6	1'-6	1'-6	1'-6	1'-6	1'-6	1'-6	1'-6	1'-6	1'-6	1'-6	1'-6	1'-6	1'-6	1'-6	1'-6	1'-6	1'-6	1'-6	1'-6	1'-6	1'-6	1'-6	1'-6
B	9"	1'-0	1'-1	1'-2	1'-3	9"	1'-0	1'-1	1'-2	1'-3	9"	1'-0	1'-1	1'-2	1'-3	9"	1'-0	1'-1	1'-2	1'-3	9"	1'-0	1'-1	1'-2	1'-3
C	4"	7"	1'-0	1'-5	1'-10	4"	7"	1'-0	1'-5	1'-10	5"	8"	1'-1	1'-6	1'-11	5"	8"	1'-1	1'-7	2'-0	6"	9"	1'-2	1'-7	2'-1
D	2'-7	3'-1	3'-7	4'-1	4'-7	2'-7	3'-1	3'-7	4'-1	4'-7	2'-8	3'-2	3'-8	4'-2	4'-8	2'-8	3'-2	3'-8	4'-3	4'-9	2'-9	3'-3	3'-9	4'-3	4'-10
E	6'-6	8'-0	9'-6	11'-0	12'-6	6'-6	8'-0	9'-6	11'-0	12'-6	6'-6	8'-0	9'-6	11'-0	12'-6	6'-0	7'-6	9'-0	10'-6	12'-0	6'-0	7'-6	9'-0	10'-6	12'-0
F	1'-1	1'-9	2'-4	3'-0	3'-8	1'-1	1'-9	2'-4	3'-0	3'-8	1'-2	1'-10	2'-6	3'-1	3'-9	1'-2	1'-10	2'-6	3'-3	3'-10	1'-3	1'-11	2'-7	3'-3	4'-0
G	6'-6	8'-0	9'-6	11'-0	12'-6	6'-6	8'-0	10'-0	11'-6	13'-0	7'-0	8'-6	10'-0	12'-0	13'-6	7'-0	9'-0	10'-6	12'-6	14'-0	7'-6	9'-6	11'-0	13'-0	14'-6
J	1'-1	1'-9	2'-4	3'-0	3'-8	1'-1	1'-9	2'-4	3'-0	3'-8	1'-2	1'-10	2'-6	3'-1	3'-9	1'-2	1'-10	2'-6	3'-3	3'-10	1'-3	1'-11	2'-7	3'-3	4'-0
K	1'-3⅞	1'-3⅞	1'-3⅞	1'-3⅞	1'-3⅞	1'-3⅞	1'-3⅞	1'-3⅝	1'-3⅝	1'-3⅝	1'-3⅝	1'-3⅝	1'-3⅝	1'-3⅝	1'-3⅝	1'-3⅝	1'-3⅝	1'-3⅝	1'-3⅝	1'-3⅝	1'-4	1'-4	1'-4	1'-4	1'-4
L	1'-0	1'-4	1'-7	1'-11	2'-2	11"	1'-2	1'-6	1'-9	2'-0	10"	1'-1	1'-5	1'-8	1'-11	1'-1	1'-4	1'-7	1'-10	2'-1	1'-1	1'-4	1'-7	1'-10	2'-1
M	1'-0	1'-4	1'-7	1'-11	2'-2	1'-1	1'-5	1'-6	1'-10	2'-2	1'-0	1'-5	1'-9	1'-10	2'-3	1'-2	1'-5	1'-9	1'-11	2'-4	1'-2	1'-5	1'-10	2'-1	2'-6
N	1'-3⅞	1'-3⅞	1'-3⅞	1'-3⅞	1'-3⅞	1'-4¼	1'-4¼	1'-4¼	1'-4¼	1'-4¼	1'-4¾	1'-4¾	1'-4¾	1'-4¾	1'-4¾	1'-5¼	1'-5¼	1'-5¼	1'-5¼	1'-5¼	1'-6	1'-6	1'-6	1'-6	1'-6

4 : 1 Slope — Dimensions

Skew ∡	0°					5°					10°					15°					20°				
Height H	3'	4'	5'	6'	7'	3'	4'	5'	6'	7'	3'	4'	5'	6'	7'	3'	4'	5'	6'	7'	3'	4'	5'	6'	7'
A	1'-6	1'-6	1'-6	1'-6	1'-6	1'-6	1'-6	1'-6	1'-6	1'-6	1'-6	1'-6	1'-6	1'-6	1'-6	1'-6	1'-6	1'-6	1'-6	1'-6	1'-6	1'-6	1'-6	1'-6	1'-6
B	9"	1'-0	1'-1	1'-2	1'-3	9"	1'-0	1'-1	1'-2	1'-3	9"	1'-0	1'-1	1'-2	1'-3	9"	1'-0	1'-1	1'-2	1'-3	9"	1'-0	1'-1	1'-2	1'-3
C	4"	6"	11"	1'-4	1'-8	3"	6"	11"	1'-4	1'-9	3"	6"	11"	1'-4	1'-9	3"	6"	11"	1'-4	1'-9	3"	7"	1'-0	1'-5	1'-10
D	2'-7	3'-0	3'-6	4'-0	4'-5	2'-6	3'-0	3'-6	4'-0	4'-6	2'-6	3'-0	3'-6	4'-0	4'-6	2'-6	3'-0	3'-6	4'-0	4'-6	2'-6	3'-1	3'-7	4'-1	4'-7
E	10'-0	12'-6	15'-0	17'-6	20'-0	10'-0	12'-6	15'-0	17'-0	19'-6	10'-0	12'-6	14'-6	17'-0	19'-6	10'-0	12'-0	14'-6	17'-0	19'-6	10'-0	12'-0	14'-6	17'-0	19'-6
F	1'-0	1'-7	2'-3	2'-11	3'-5	1'-0	1'-7	2'-3	2'-11	3'-6	1'-0	1'-7	2'-3	2'-11	3'-6	1'-0	1'-7	2'-3	2'-11	3'-6	1'-0	1'-9	2'-4	3'-0	3'-8
G	10'-0	12'-6	15'-0	17'-6	20'-0	10'-6	13'-0	15'-6	18'-0	20'-6	10'-6	13'-0	16'-0	18'-6	21'-0	11'-0	13'-6	16'-0	19'-0	21'-6	11'-6	14'-0	17'-0	19'-6	22'-6
J	1'-0	1'-7	2'-3	2'-11	3'-5	1'-0	1'-7	2'-3	2'-11	3'-6	1'-0	1'-7	2'-3	2'-11	3'-6	1'-0	1'-7	2'-3	2'-11	3'-6	1'-0	1'-9	2'-4	3'-0	3'-8
K	1'-3⅞	1'-3⅞	1'-3⅞	1'-3⅞	1'-3⅞	1'-3⅝	1'-3⅝	1'-3⅝	1'-3⅝	1'-3⅝	1'-3⅝	1'-3⅝	1'-3⅝	1'-3⅝	1'-3⅝	1'-3⅝	1'-3⅝	1'-3⅝	1'-3⅝	1'-3⅝	1'-4	1'-4	1'-4	1'-4	1'-4
L	1'-9	2'-2	2'-6	2'-11	3'-4	1'-8	2'-1	2'-5	2'-11	3'-4	1'-7	2'-0	2'-6	2'-11	3'-3	1'-7	2'-1	2'-5	2'-10	3'-2	1'-7	2'-1	2'-5	2'-10	3'-2
M	1'-9	2'-2	2'-6	2'-11	3'-4	1'-8	2'-1	2'-7	3'-0	3'-5	1'-9	2'-3	2'-7	3'-1	3'-6	1'-10	2'-4	2'-9	3'-2	3'-8	1'-10	2'-5	2'-10	3'-4	3'-9
N	1'-3⅞	1'-3⅞	1'-3⅞	1'-3⅞	1'-3⅞	1'-4¼	1'-4¼	1'-4¼	1'-4¼	1'-4¼	1'-4¾	1'-4¾	1'-4¼	1'-4¾	1'-4¾	1'-5¼	1'-5¼	1'-5¼	1'-5¼	1'-5¼	1'-6	1'-6	1'-6	1'-6	1'-6

6 : 1 Slope — Dimensions

Skew ∡	0°					5°					10°					15°					20°				
Height H	3'	4'	5'	6'	7'	3'	4'	5'	6'	7'	3'	4'	5'	6'	7'	3'	4'	5'	6'	7'	3'	4'	5'	6'	7'
A	1'-6	1'-6	1'-6	1'-6	1'-6	1'-6	1'-6	1'-6	1'-6	1'-6	1'-6	1'-6	1'-6	1'-6	1'-6	1'-6	1'-6	1'-6	1'-6	1'-6	1'-6	1'-6	1'-6	1'-6	1'-6
B	9"	1'-0	1'-1	1'-2	1'-3	9"	1'-0	1'-1	1'-2	1'-3	9"	1'-0	1'-1	1'-2	1'-3	9"	1'-0	1'-1	1'-2	1'-3	9"	1'-0	1'-1	1'-2	1'-3
C	3"	6"	11"	1'-4	1'-8	3"	6"	11"	1'-4	1'-8	3"	6"	11"	1'-4	1'-8	3"	6"	11"	1'-4	1'-9	3"	6"	11"	1'-4	1'-9
D	2'-6	3'-0	3'-6	4'-0	4'-5	2'-6	3'-0	3'-6	4'-0	4'-5	2'-6	3'-0	3'-6	4'-0	4'-5	2'-6	3'-0	3'-6	4'-0	4'-6	2'-6	3'-0	3'-6	4'-0	4'-6
E	12'-6	15'-6	18'-6	21'-6	24'-6	12'-6	15'-6	18'-6	21'-6	24'-6	12'-0	15'-0	18'-0	21'-0	24'-0	12'-0	15'-0	18'-0	21'-0	24'-0	12'-0	15'-0	18'-0	21'-0	24'-0
F	1'-0	1'-7	2'-3	2'-11	3'-5	1'-0	1'-7	2'-3	2'-11	3'-5	1'-0	1'-7	2'-3	2'-11	3'-5	1'-0	1'-7	2'-3	2'-11	3'-6	1'-0	1'-7	2'-3	2'-11	3'-6
G	12'-6	15'-6	18'-6	21'-6	24'-6	12'-6	16'-0	19'-0	22'-0	25'-0	13'-0	16'-0	19'-6	22'-6	25'-6	13'-6	16'-6	20'-0	23'-0	26'-6	13'-6	17'-0	20'-6	23'-6	27'-0
J	1'-0	1'-7	2'-3	2'-11	3'-5	1'-0	1'-7	2'-3	2'-11	3'-5	1'-0	1'-7	2'-3	2'-11	3'-5	1'-0	1'-7	2'-3	2'-11	3'-6	1'-0	1'-7	2'-3	2'-11	3'-6
K	1'-3⅞	1'-3⅞	1'-3⅞	1'-3⅞	1'-3⅞	1'-3⅝	1'-3⅝	1'-3⅝	1'-3⅝	1'-3⅝	1'-3⅝	1'-3⅝	1'-3⅝	1'-3⅝	1'-3⅝	1'-3⅝	1'-3⅝	1'-3⅝	1'-3⅝	1'-3⅝	1'-4	1'-4	1'-4	1'-4	1'-4
L	2'-1	2'-8	3'-2	3'-8	4'-3	2'-1	2'-7	3'-1	3'-7	4'-1	2'-1	2'-7	3'-1	3'-7	4'-1	2'-1	2'-7	3'-1	3'-7	4'-1	2'-1	2'-7	3'-1	3'-7	4'-1
M	2'-1	2'-8	3'-2	3'-8	4'-3	2'-2	2'-8	3'-2	3'-9	4'-3	2'-2	2'-9	3'-3	3'-10	4'-5	2'-3	2'-10	3'-4	3'-11	4'-5	2'-4	2'-11	3'-5	4'-1	4'-7
N	1'-3⅞	1'-3⅞	1'-3⅞	1'-3⅞	1'-3⅞	1'-4¼	1'-4¼	1'-4¼	1'-4¼	1'-4¼	1'-4¾	1'-4¾	1'-4¾	1'-4¾	1'-4¾	1'-5¼	1'-5¼	1'-5¼	1'-5¼	1'-5¼	1'-6	1'-6	1'-6	1'-6	1'-6

'c' bars

Height H	Slope	Short Wing 0° to 10°	Long Wing 0° to 20°
7'	2 : 1	3 - #5	3 - #5
	4 : 1	5 - #5	5 - #5

'a' bars

Height H	Short Wing 0° to 20°	Long Wing 0° & 5°	Long Wing 10° to 20°
3'	#4	#4	#4
4'	#4	#4	#4
5'	#4	#4	#4
6'	#4	#4	#5
7'	#4	#4	#6

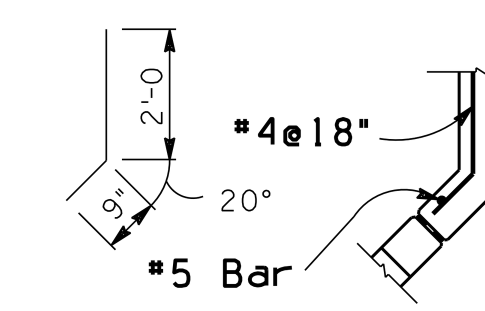

SECTION C-C

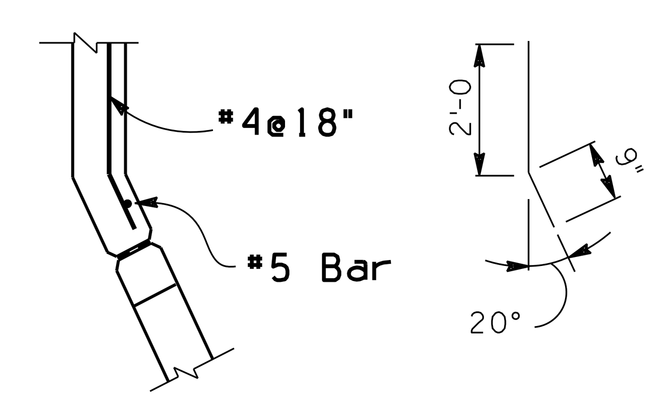

SECTION D-D

NOTE:

For General Notes, Dimensions, and additional Details, see SD 6.01 (1 of 5). For Headwall Quantities see SD 6.09 (1 to 3).

Note to Designer:
The information presented in this Standard Detail has been prepared in accordance with recognized engineering principles and is for general use. It should not be used for specific application without competent professional examination and verification of its suitability and applicability by a licensed professional engineer. Contents within the inner border line shall not be altered.

NO	DESCRIPTION OF REVISIONS	MADE BY	DATE
1	Original Issue	S.U.H.	2-12
2	Added 3',4' height for existing box extensions only	D.B.B.	5-15
3			
4			

DESIGN APPROVED

APPROVED FOR DISTRIBUTION

ARIZONA DEPARTMENT OF TRANSPORTATION
INFRASTRUCTURE DELIVERY AND OPERATIONS DIVISION
BRIDGE GROUP STRUCTURE DETAIL

REINFORCED CONCRETE BOX CULVERTS
OUTLET WINGS - SKEW 0° to 20°
CULVERT HEIGHT 3' to 7'

ROUTE | PROJECT NO. | FA NO. | DRAWING NO. SD 6.08 (1 of 8)

LOCATION | SHEET NO. OF

22-JAN-2016 09:55 G:\Bridge\CADD\Standards\SD_Sheets\SD 6 Drainage Stuctures\SD 6.01-6.11 Series\SD608-1 to 8\sd608-1_1916.dgn