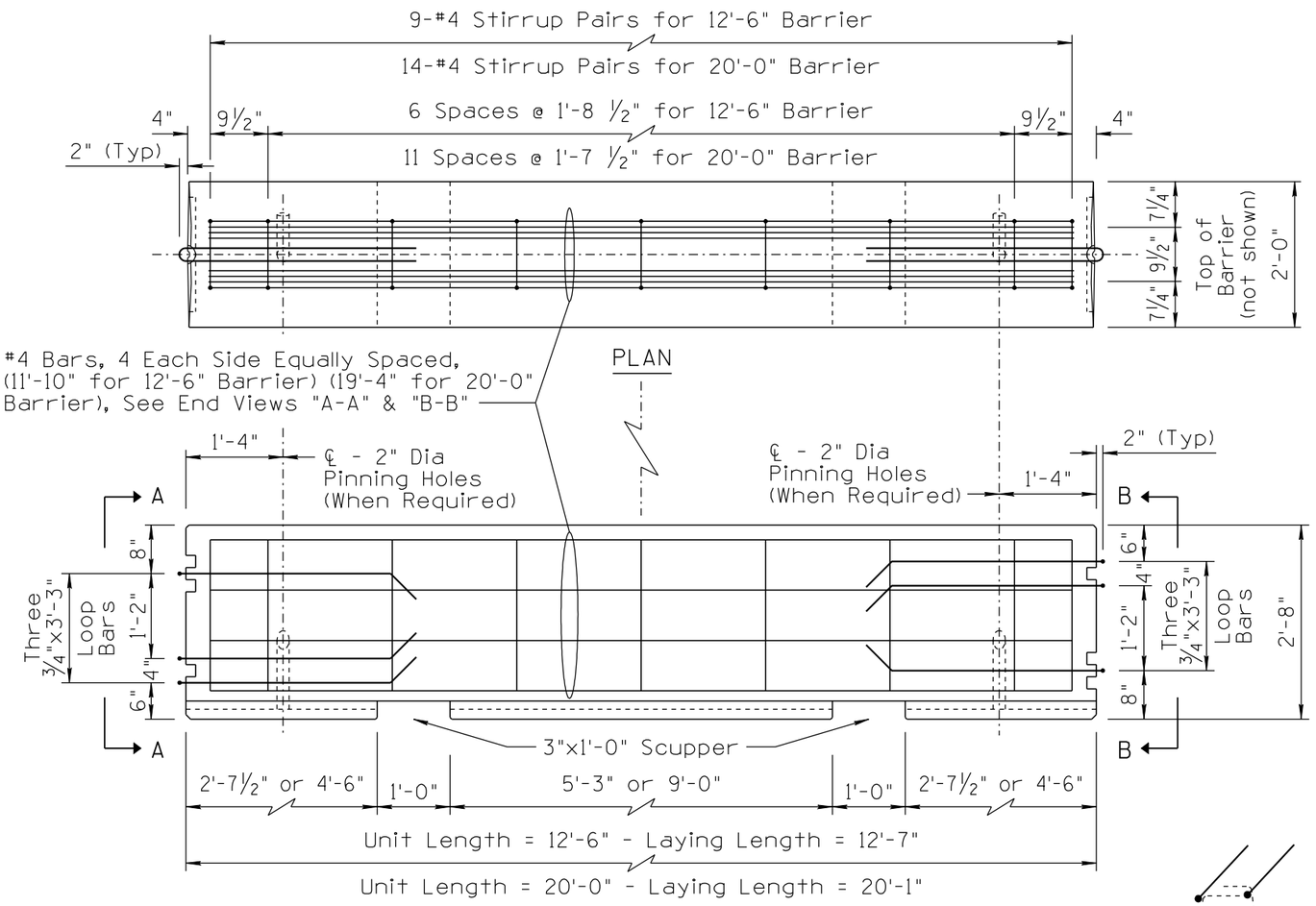

ELEVATION

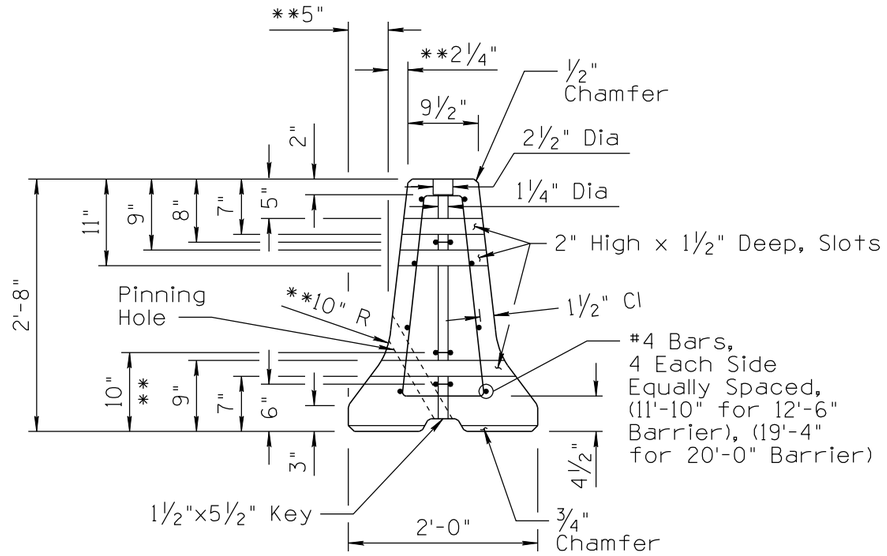

END VIEW A-A

See Sheet 2 of 2 for Pinning Hole Details

** Dimensions Are to the Intersection Point of the Barrier Slopes. Construct the 10 Inch Radius to Provide a Smooth Transition Between the Slopes.

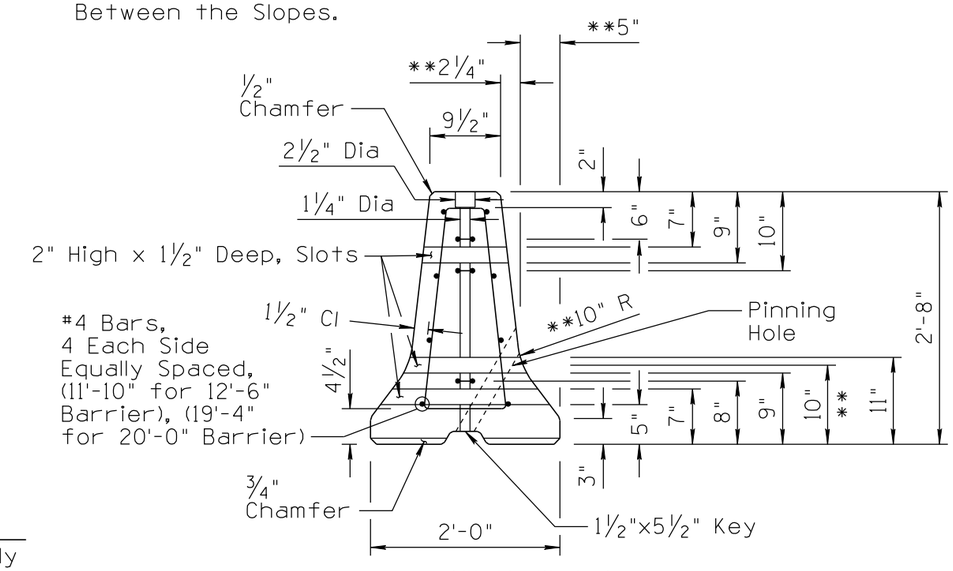

END VIEW B-B

See Sheet 2 of 2 for Pinning Hole Details

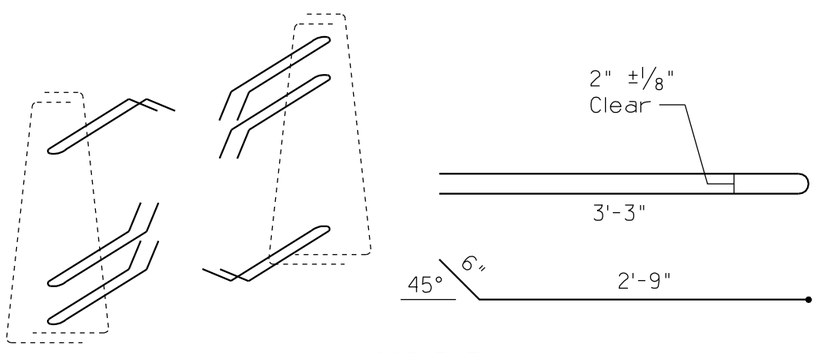

LOOP BAR

A-36 (ASTM A-709, HPS 70W, S84, Zone 2) Hot-Dip Galvanized After Fabrication

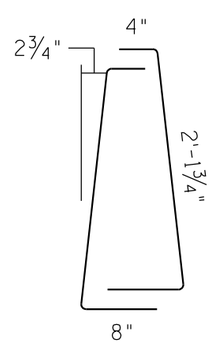

#4 STIRRUP PAIRS

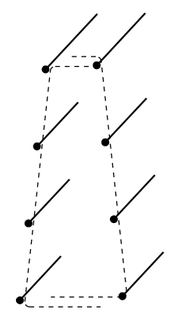

#4 BARS

4 Each Side Equally Spaced, (11'-10" for 12'-6" Barrier) (19'-4" for 20'-0" Barrier)

NOT TO SCALE

DESIGN APPROVED **SIGNATURES**	ARIZONA DEPARTMENT OF TRANSPORTATION INTERMODAL TRANSPORTATION DIVISION TRAFFIC SIGNING & MARKING STANDARD DRAWINGS	REVISION 6/14
APPROVED FOR DISTRIBUTION **ON FILE**	PRECAST CONCRETE BARRIER STRUCTURAL DETAILS	DRAWING NO. C-3
		SHEET NO. 1 OF 2

NO.	DESCRIPTION OF REVISIONS	MADE BY	DATE
1	RE-ISSUE	L. LOPEZ	2/02
2	LOOP BAR AND SLOT (2") DIMENSION ADDED.	L. LOPEZ	3/03

NO.	DESCRIPTION OF REVISIONS	MADE BY	DATE
3	DELETED SHEET #3 (OLD BARRIER).	L. LOPEZ	12/06
4	CHANGED TEXT TO UPPER AND LOWER CASE. ADDED NEW BORDER.	L. LOPEZ	6/14