FIN TOP VIEW
Router Cut

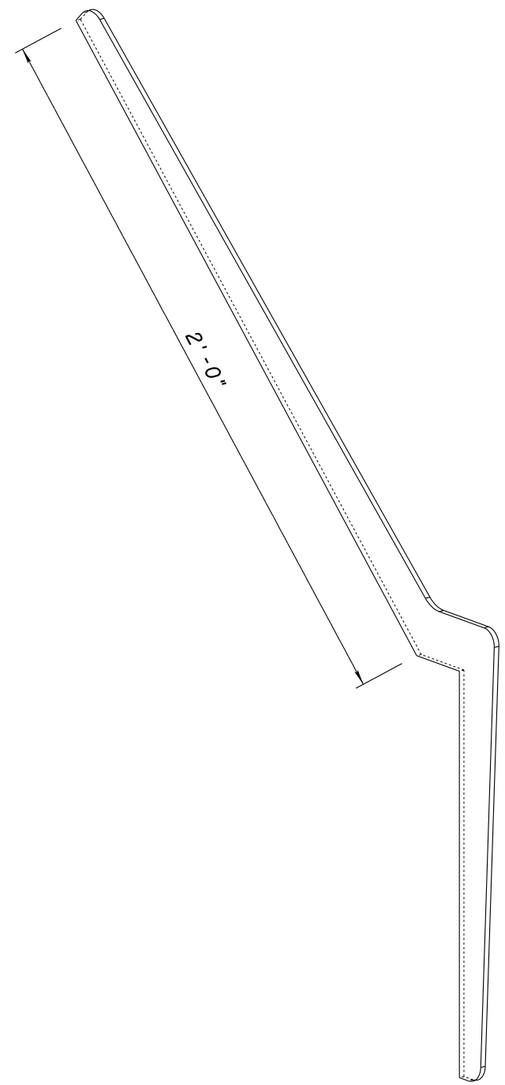

FIN
Router Cut
(3D Isometric)

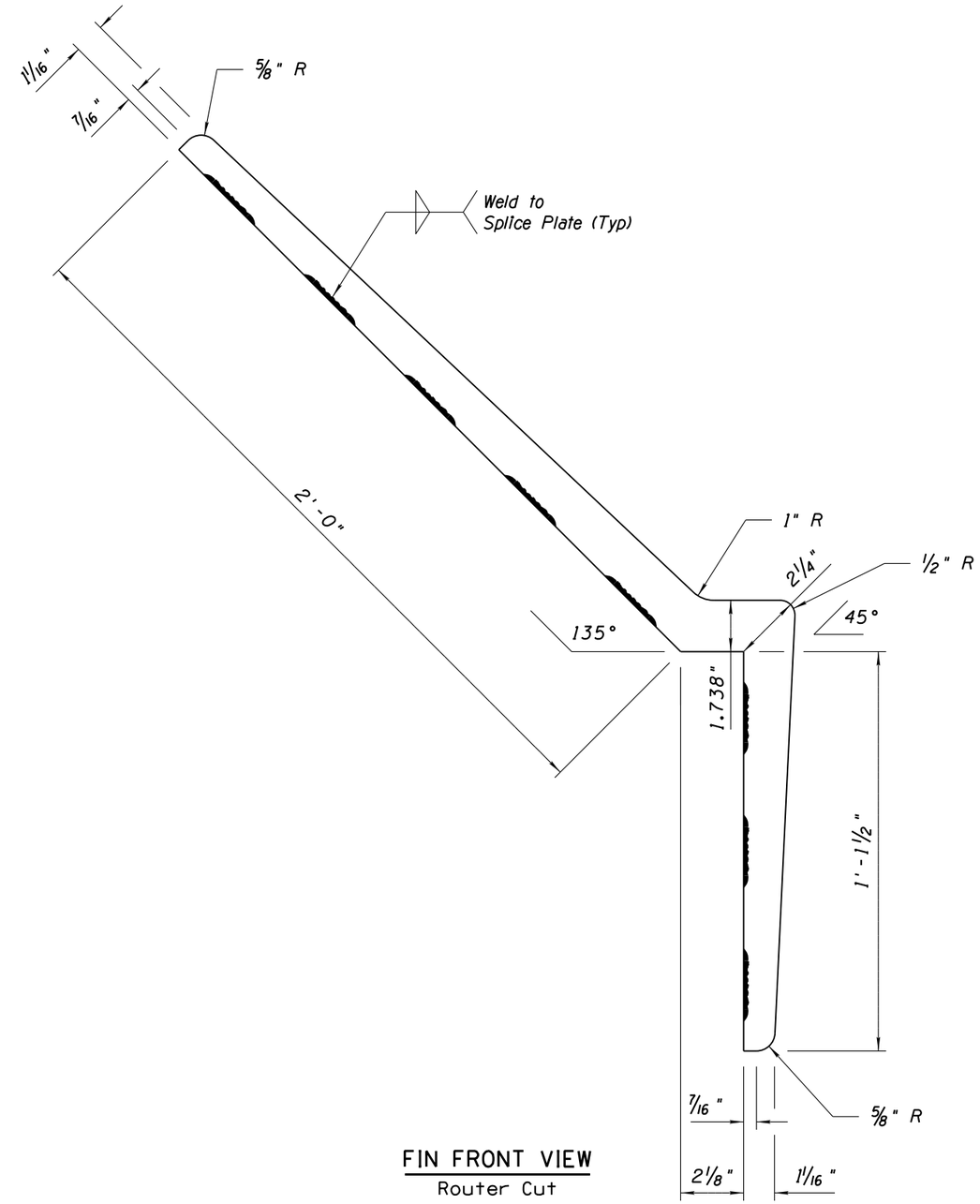

FIN FRONT VIEW
Router Cut

Note to Designer:
The information presented in this Standard Drawing has been prepared in accordance with recognized engineering principles and is for general use. It should not be used for specific application without competent professional examination and verification of its suitability and applicability by a licensed professional engineer. Contents within the inner border line shall not be altered.

PRIOR DISTRIBUTION DATE	06/2019

STANDARDS ENGINEER H. LUNA RECOMMENDED FOR APPROVAL	ARIZONA DEPARTMENT OF TRANSPORTATION INFRASTRUCTURE DELIVERY AND OPERATIONS DIVISION TRAFFIC SIGNING & MARKING STANDARD DRAWING
GROUP MANAGER M. HANNA APPROVED	ALUMINUM GRAFFITI SHIELD FIN
STANDARDS COMMITTEE APPROVED FOR DISTRIBUTION 07/2019 DATE	DRAWING NO. S-18 (6 of 11)