5/8" DIA. x 3 1/4" H.S. ASTM A325 GALVANIZED HEX. HEAD BOLT, WITH HEX.NUT AND 3 FLAT WASHERS WITH EACH BOLT. FOR BOLTING PROCEDURES SEE STD. DWG. S-5. TORQUE BOLTS TO 120 FT.-LBS. DO NOT PEEN OR DEFORM BOLT THREADS AFTER TORQUING.

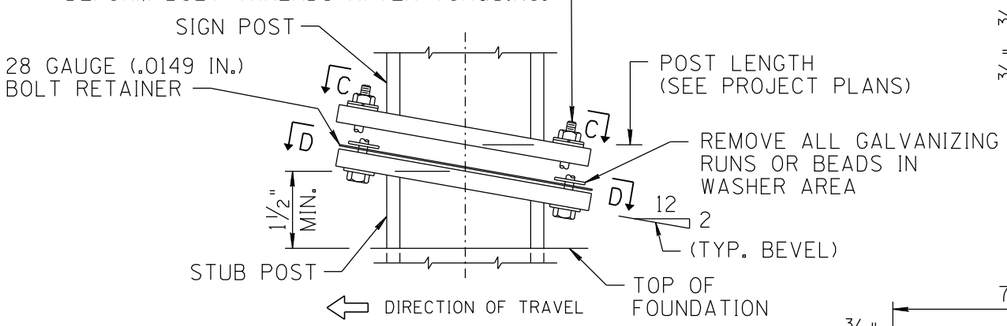

SIGN POST AND STUB POST ELEVATION

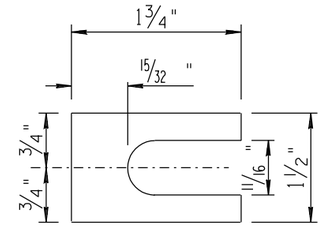

FURNISH 2 EACH 0.012"± THICK AND 2 EACH 0.032"± THICK SHIMS PER POST. SHIMS SHALL BE FABRICATED FROM BRASS SHIM STOCK OR STRIP CONFORMING TO THE REQUIREMENTS OF A.S.T.M. B36/B36M-95

SHIM DETAIL

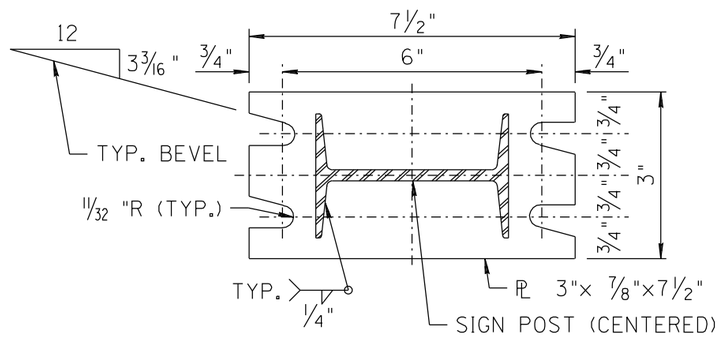

SECTION C-C

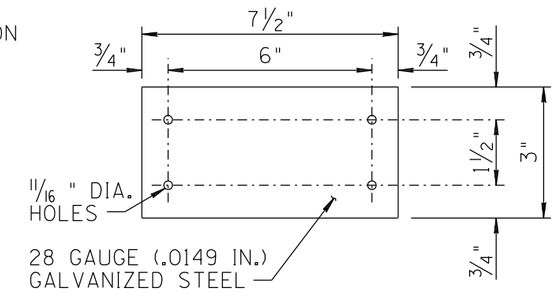

BOLT RETAINER

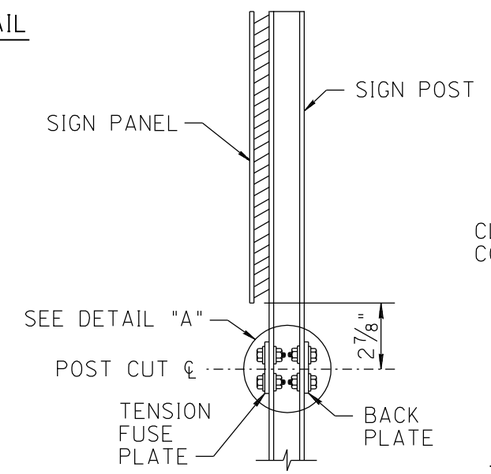

POST SHALL BE SAW CUT BEFORE GALVANIZING

SIDE VIEW OF POST

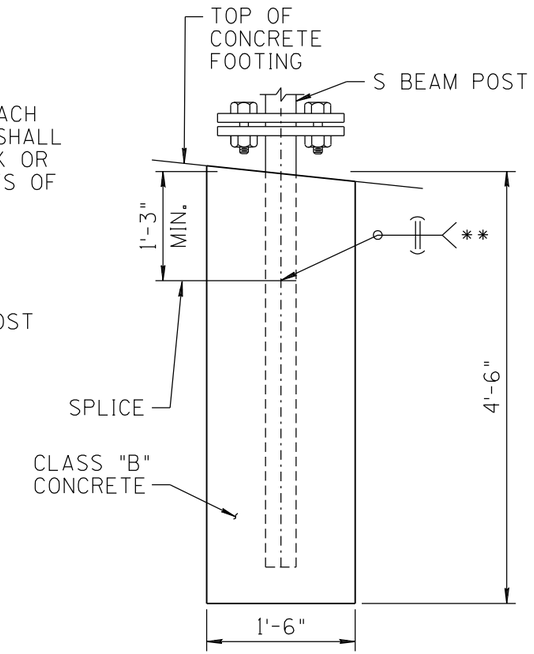

PERMISSIBLE SHOP SPLICE

ALL SHOP SPLICES SHALL BE APPROVED BY THE ENGINEER. ALL WELDING SHALL BE IN ACCORDANCE WITH AWS-1.1 LATEST EDITION.

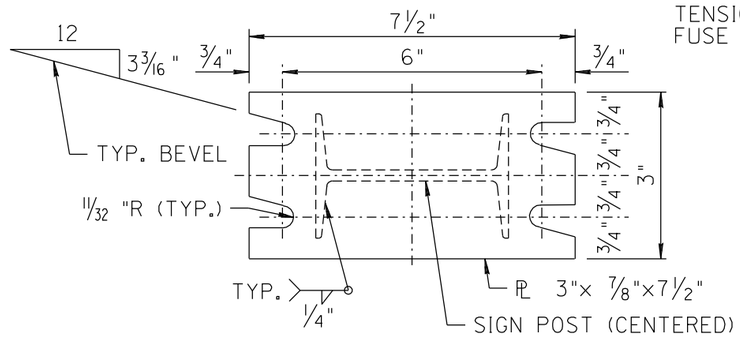

SECTION D-D

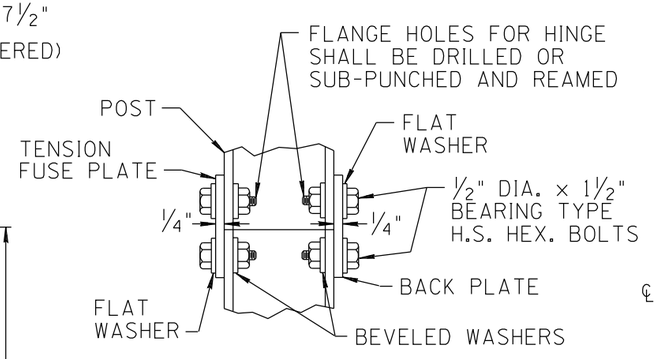

DETAIL "A" HINGE

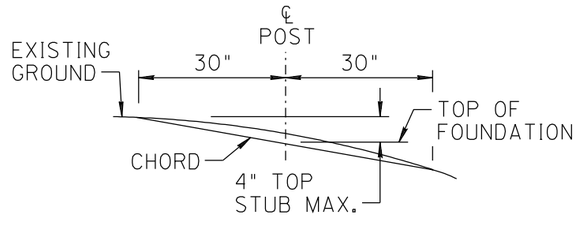

STUB PROJECTION LIMITS

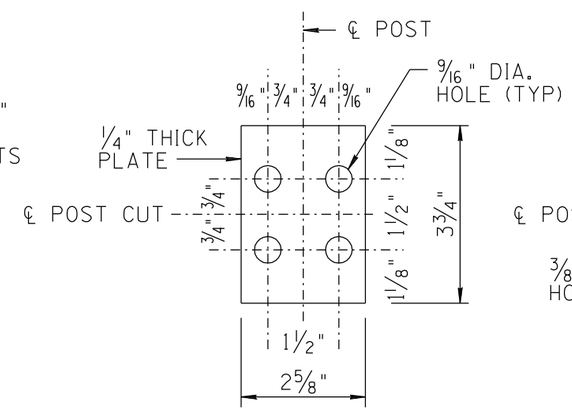

BACK PLATE

(S4x7.7)

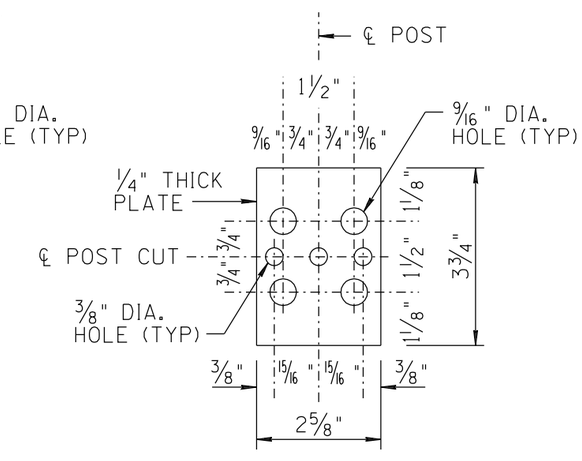

TENSION FUSE PLATE

NOTES:

1. SECTIONS SHOWN ARE FOR INSTALLATIONS ON RIGHT SHOULDER AND IN GORE. PLATE SLOT BEVELS ARE OPPOSITE HAND FROM THAT SHOWN FOR INSTALLATIONS ON LEFT SHOULDER.
2. ALL PLATES SHALL BE ASTM A572 GRADE 50. ALL PLATE HOLES SHALL BE DRILLED. ALL PLATE CUTS SHALL PREFERABLY BE SAW CUTS; FLAME CUTTING WILL BE PERMITTED PROVIDED ALL EDGES ARE GROUND.

NOT TO SCALE

DESIGN APPROVED	ARIZONA DEPARTMENT OF TRANSPORTATION INTERMODAL TRANSPORTATION DIVISION TRAFFIC SIGNING & MARKING STANDARD DRAWINGS	REVISION 10/10
APPROVED FOR DISTRIBUTION ARCHIVED	BREAK-AWAY POST DETAILS S4x7.7	DRAWING NO. S-6
		SHEET NO. 1 OF 1

NO	DESCRIPTION OF REVISIONS	MADE BY	DATE
1	RE-ISSUE	L. LOPEZ	2/02
2	REVISED AND RE-ISSUED. ADDED NEW BORDER.	PARSONS BRINCKERHOFF	10/10