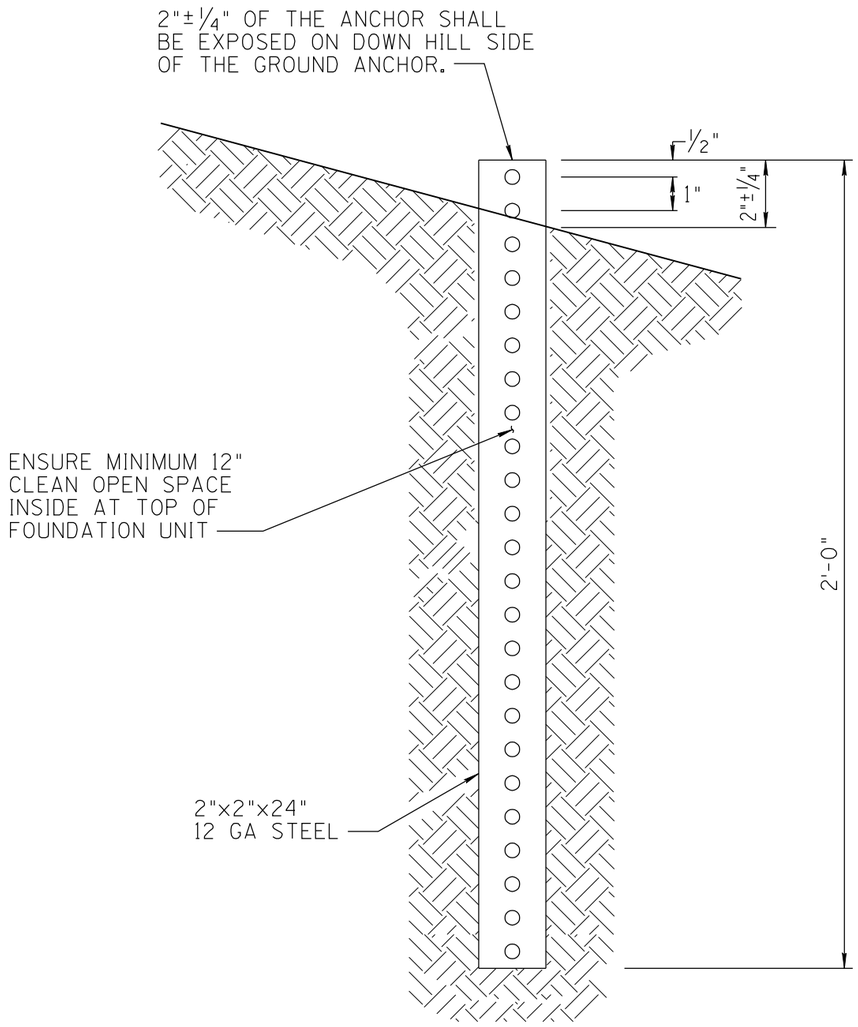

IN-GROUND DRIVEN FOUNDATION UNIT

(IGD)

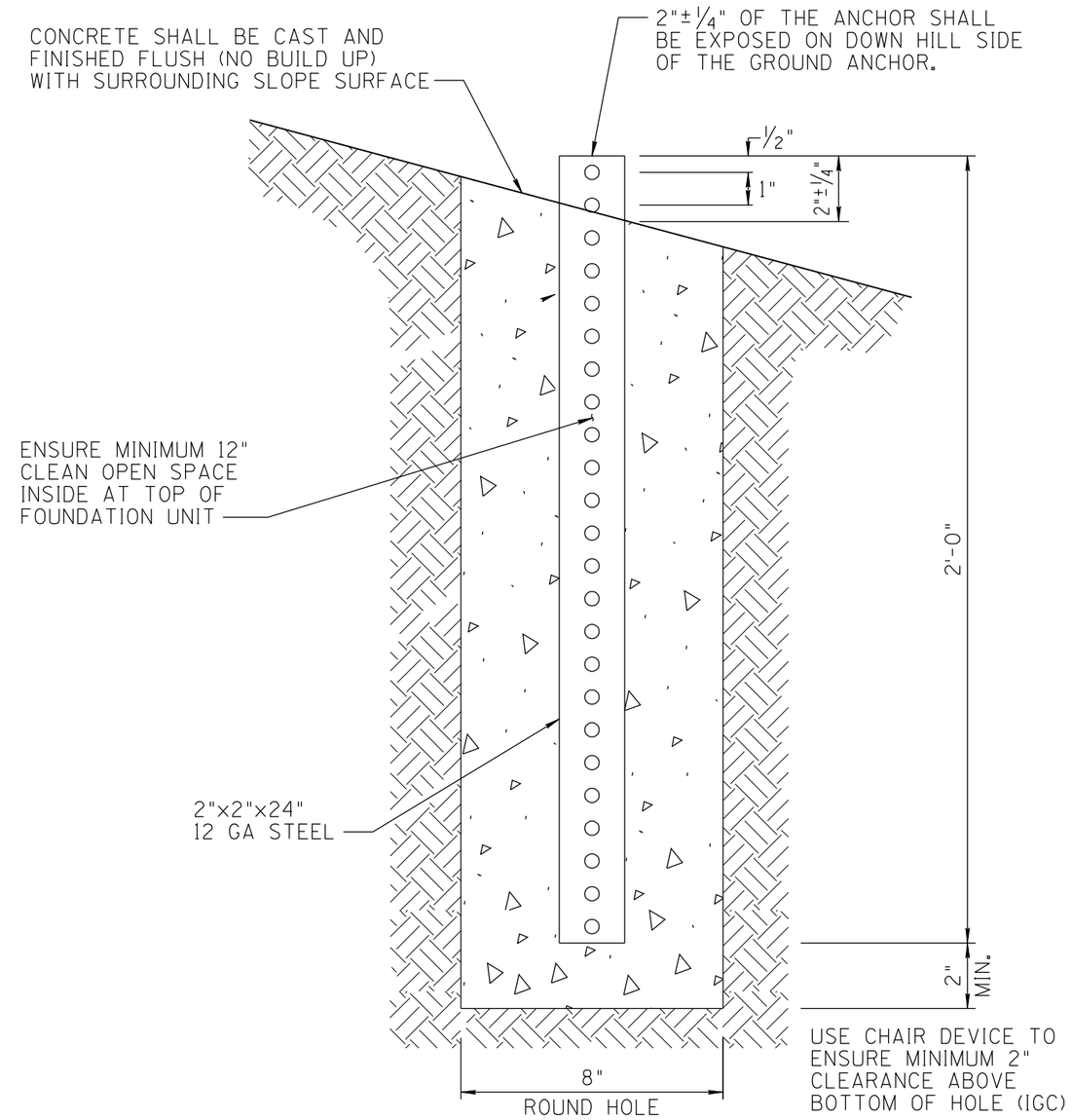

IN-GROUND CONCRETE FOUNDATION UNIT

(IGC)

NOTES:

1. FOR CUT- OR FILL-SIDE APPLICATIONS.
2. USE MEASURES TO ENSURE MINIMUM 12 INCH EMPTY SPACE INSIDE THE TOP OF INSTALLED FOUNDATION UNIT (IGD AND IGC).
3. STEEL ANCHOR FOUNDATIONS SHALL BE PERFORATED FULL-LENGTH WITH 3/8 INCH DIAMETER HOLES AT ONE-INCH ON-CENTER ALONG THE CENTERLINE OF EACH FACE WITH ADJACENT AND OPPOSITE HOLES TO BE ALIGNED ON ALL FACES AND THE END HOLES TO BE APPROXIMATELY 1/2 INCH FROM EACH END.
4. DELINEATORS ALONG FREEWAYS SHOULD BE INSTALLED IN CONCRETE (SEE IN-GROUND CONCRETE FOUNDATION UNIT).
5. DELINEATORS ALONG STATE HIGHWAYS (NON-FREEWAYS) SHOULD BE DRIVEN INTO THE SOIL (SEE IN-GROUND DRIVEN FOUNDATION UNIT) IF THE SOIL CONDITIONS ARE APPROPRIATE AS DETERMINED BY THE ENGINEER REPRESENTING ADOT; OTHERWISE, THE DELINEATORS SHOULD BE INSTALLED IN CONCRETE.

NOT TO SCALE

NO	DESCRIPTION OF REVISIONS	MADE BY	DATE
1	ORIGINAL ISSUE	C.C. & L.L.	7/09
2	REVISED DIMENSIONS, NOTES AND CALL OUTS	L. LOPEZ	1/10
3	REVISED EXPOSED ANCHOR, REVISED NOTES.	L. LOPEZ	8/11
4			

DESIGN APPROVED ARCHIVED APPROVED FOR DISTRIBUTION	ARIZONA DEPARTMENT OF TRANSPORTATION INTERMODAL TRANSPORTATION DIVISION TRAFFIC SIGNING & MARKING STANDARD DRAWINGS	REVISION 8/11
	DELINEATORS IN-GROUND FOUNDATION UNIT DETAILS	DRAWING NO. M-37 SHEET NO. 1 OF 1