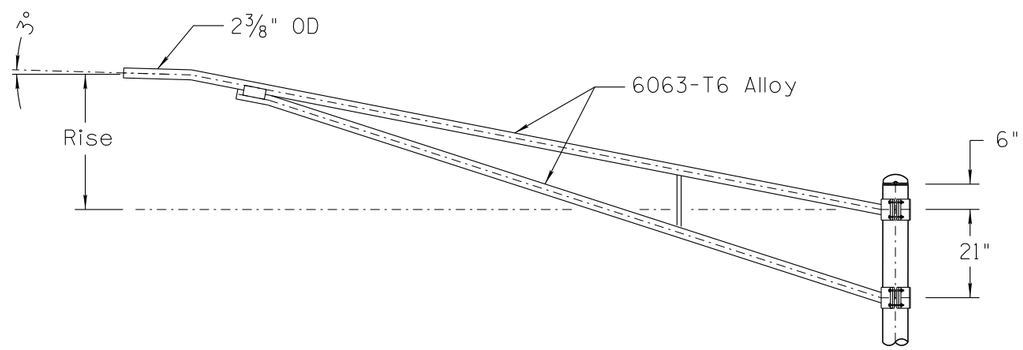

MAST ARM INFORMATION			
Length	Rise		* Min Thick
	Min	Max	
6'	2'-0"	4'-0"	0.125"
10'	2'-0"	4'-0"	0.125"
15'	2'-0"	4'-0"	0.125"
20'	4'-0"	6'-0"	0.125"

* Min Thickness of Vertical Member in Mast Arm = 0.1563"

NOTES:

1. Truss arm shall be heat treated after fabrication to T6 condition.
2. All hardware is 300 series stainless steel.

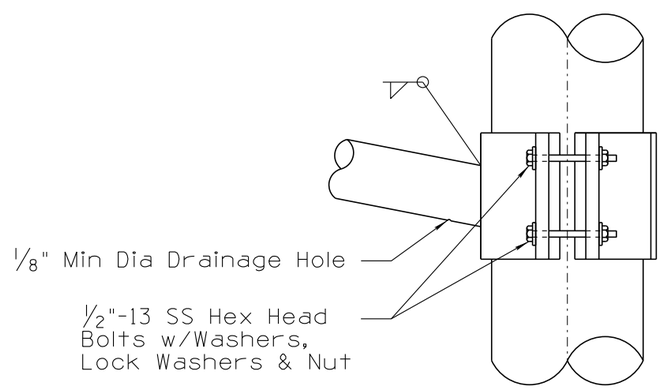

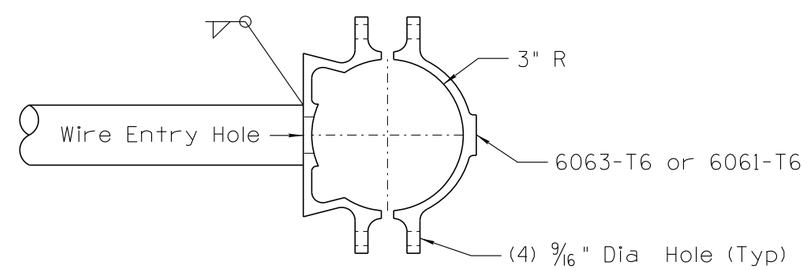

ALUMINUM POLE CLAMP DETAIL (6" ID)

NOT TO SCALE

DESIGN APPROVED ARCHIVED APPROVED FOR DISTRIBUTION	ARIZONA DEPARTMENT OF TRANSPORTATION INTERMODAL TRANSPORTATION DIVISION TRAFFIC SIGNALS AND LIGHTING STANDARD DRAWINGS	REVISION 03/10 DRAWING NO. T.S. 4-27
	ALUMINUM TRUSS ARM DETAILS TYPE G, H, AND I POLES	SHEET NO. 1 OF 1

NO	DESCRIPTION OF REVISIONS	MADE BY	DATE
1	2010 EDITION	C. COLE	03/10
2			
3			
4			