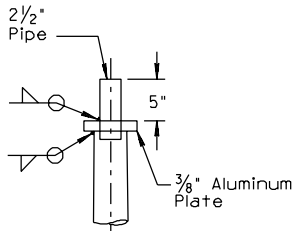


DETAIL "A"
POLE TOP DETAIL

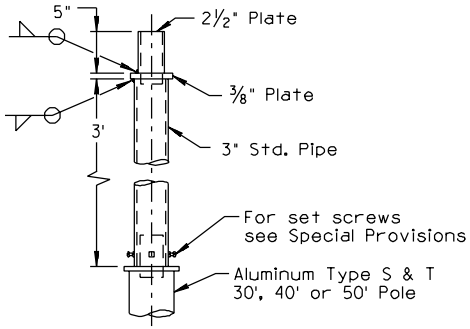


DETAIL "B"
POLE EXTENSION

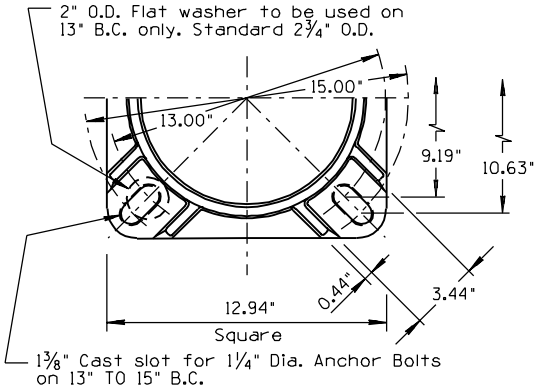


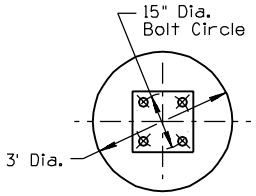


FOUNDATION PLAN

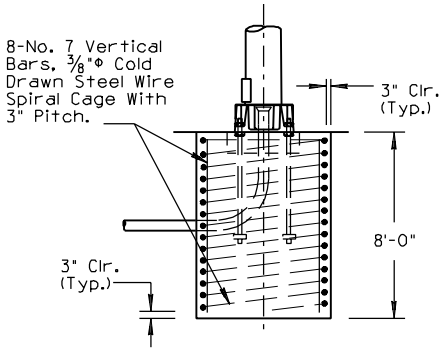


FOUNDATION DETAIL

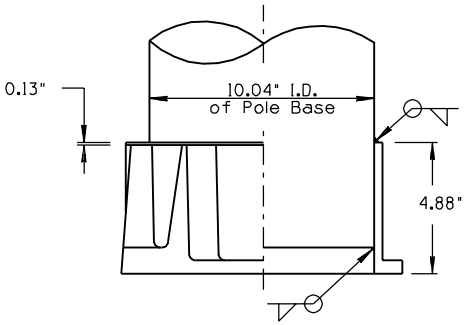


STD. POLE BASE
HALF SECTION AND ELEVATION

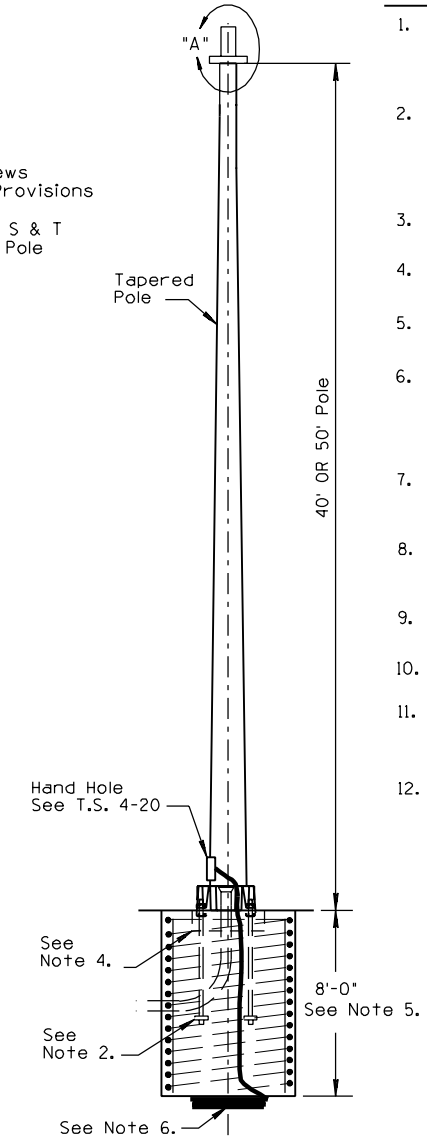


## NOTES:

1. All material and construction shall conform to the requirements of the Standard Specifications and Special Provisions.
2. See T.S. 4-23 Detail "B" for anchor bolt details. Each anchor bolt shall have four hex nuts, two flat washers and two anchor plates, all to be furnished with the pole.
3. Anchor bolts shall project 3 inches above the foundation.
4. Block out for leveling nuts. See Standard Specifications for grout.
5. Unstable soil may require deeper foundation. See Standard Specifications.
6. A 25 Ft. coil of No. 4 AWG bare copper conductor shall be installed before the concrete is poured, and connected to pole grounding screw in the hand hole.
7. Conduit shall project a minimum of 2 inches above the foundation, maximum projection shall be 4 inches..
8. The foundation hole shall be augered and Class "S" (3000 PSI) concrete poured against undisturbed earth.
9. The Type "T" pole shall be a 40' OR 50' pole as per pole schedule on plans.
10. Pole shall be installed with hand hole on traffic side.
11. Pole shall comply with 1994 AASHTO loading requirements for Structural Supports for Highway Signs, Luminaires and Traffic Signals.
12. All dimensions are nominal.

O
PLAN SYMBOL

| | | |
|---|---|---|
| DESIGN APPROVED **SIGNATURE** | ARIZONA DEPT. OF TRANSPORTATION INTERMODAL TRANSPORTATION DIVISION TRAFFIC SIGNALS & LIGHTING STANDARD DRAWINGS | REV. |
| APPROVED FOR DISTRIBUTION **ON FILE** | ALUMINUM TYPE T POLE | DRAWING NO. T.S. 4-15 |