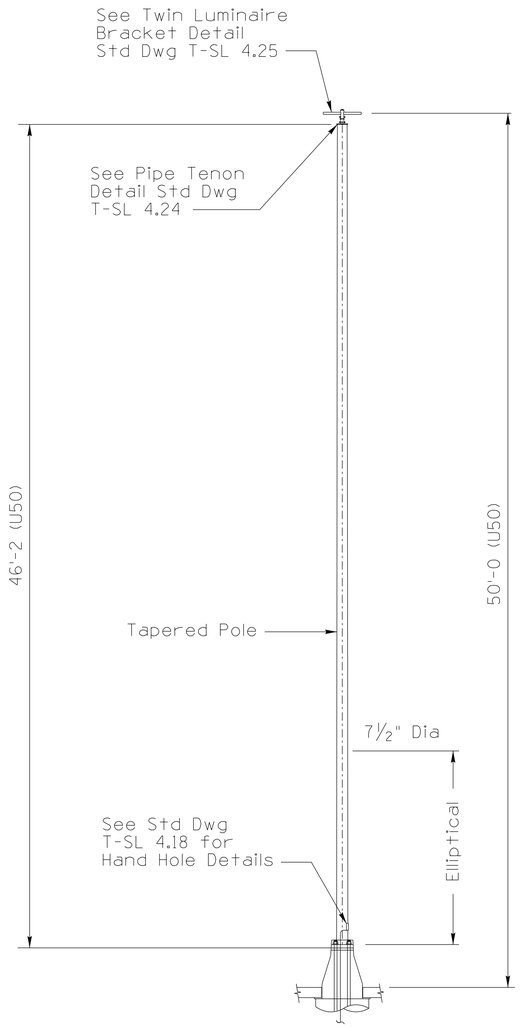

POLE TYPE "U"

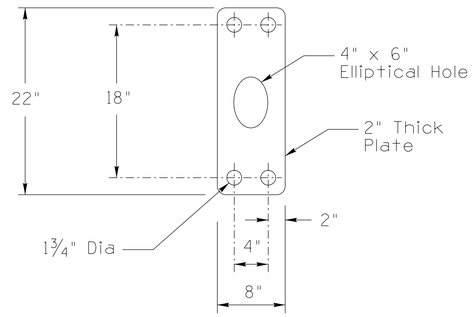

BARRIER ANCHOR PLATE

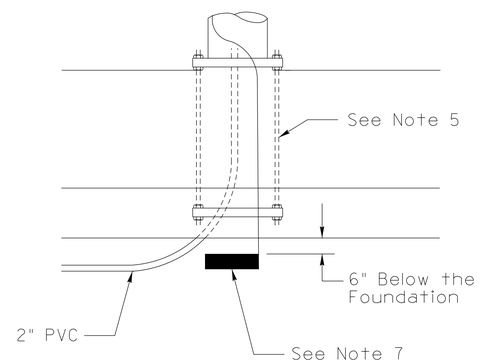

BARRIER POLE ANCHORAGE

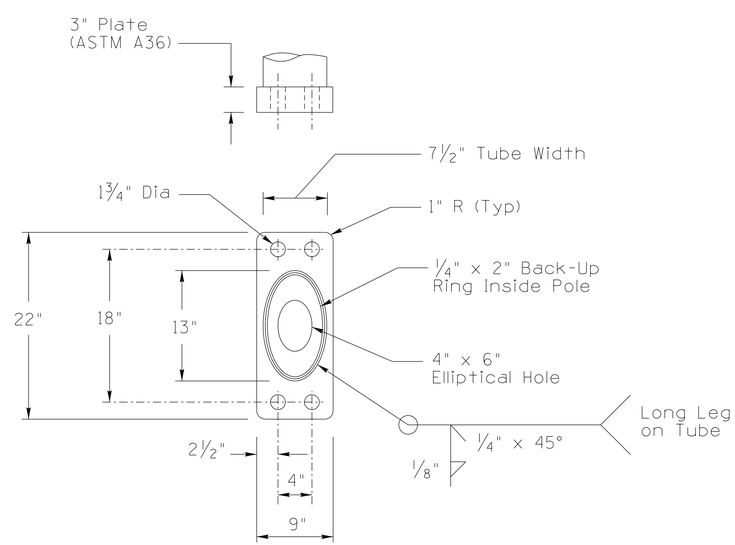

BARRIER POLE BASE FOR U50

NOTES:

1. All materials and construction shall conform to the requirements of the Standard Specifications.
2. The pole shaft shall be fabricated from sheet steel which meets or exceeds ASTM A572 Grade 50 minimum strength requirements.
3. Poles shall comply with Standard Specifications for Structural Supports for Highway Signs, Luminaires, and Traffic Signals, 6th Edition (2013), including the 2015, 2019, and 2020 Interim Revisions.
4. Conductors hanging within the pole shall be supported from the top of the pole by an approved cable hanger.
5. Anchor bolts shall conform to ASTM F1554 Grade 55 specifictions. The anchor bolts, washers, and nuts shall be fully galvanized.
6. Once the pole installation is completed the space between the bottom of the pole base plate and the median barrier shall be filled with a non-shrink grout.
7. A 25 ft coil of #4 AWG bare copper conductor or a 14 inch square copper ground plate shall be installed before the concrete is poured and connected to pole grounding lug in the hand hole. The ground plate or coil shall be covered with 6 inches of fill.
8. All dimensions not shown on the plans are dependent on the manufacturer design, and shalll be shown on the shop drawings.
9. Signed and sealed shop drawings shall be submitted to the Engineer for review and approval prior to fabrication in accordance with the Standard Specifications, unless the manufacturer has been granted approval on the Department's most recently published Approved Product List (APL).
10. All dimensions are nominal.

PRIOR DISTRIBUTION DATE	04/19

STANDARDS ENGINEER A. ALZUBI RECOMMENDED FOR APPROVAL	ARIZONA DEPARTMENT OF TRANSPORTATION INFRASTRUCTURE DELIVERY AND OPERATIONS DIVISION **TRAFFIC SIGNAL AND LIGHTING** **STANDARD DRAWINGS**	
GROUP MANAGER M. HANNA APPROVED	TYPE U POLE (ELLIPTICAL BASE) DETAILS	DRAWING NO. T-SL 4.19
STANDARDS COMMITTEE APPROVED FOR DISTRIBUTION 11/22 DATE		