Property	Requirements
Module Design Shall be for 3M or McCain Programmed Visibility Signals	Shall be direct replacement for incandescent PAR lamp, requiring no spacial tools for installation. The signal's dimmer and resistor (if applicable) shall be removed.
Operating Temperature Range	-40 to +164°F
Operating Voltage Range	80 to 135 V (60 Hz AC)
Power Factor (PF)	>90%
Total Harmonic Distortion (THD)	<20%
Lens and Shell Material	UV Stabilized Polycarbonate
Dust and Moisture Intrusion	Shall be sealed to prevent dust and moisture intrusion
Surge Suppression	Shall exceed ITE requirements
Compatibility	A list of incompatible load switches of conflict monitors shall be provided upon request
AC Voltage	120V-60 Hz
Power (W)	Max at 74C / Max at 25C 17 / 11 N/A / 22 15 / 15
Chromaticity	Per ITE requirements
Luminous Intensity (cd)	Equivalent to needed performance as achieved by the original incandescent lamp. Equivalent shall be subject to inspection by the Engineer.

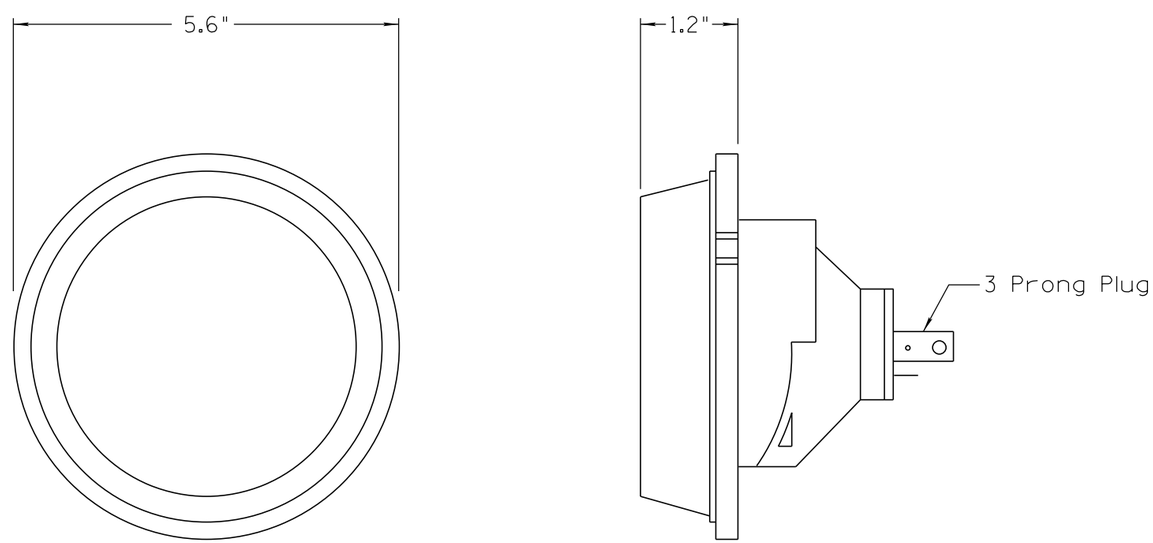

NOTES:

1. These requirements apply only to programmed visibility signals manufactured by 3M and McCain.
2. This drawing is not meant to restrict the use to only 3M or McCain. Other programmed visibility signals are allowable if approved.

NOT TO SCALE

DESIGN APPROVED SIGNATURE	ARIZONA DEPARTMENT OF TRANSPORTATION INTERMODAL TRANSPORTATION DIVISION TRAFFIC SIGNALS AND LIGHTING STANDARD DRAWINGS	REVISION 01/12
APPROVED FOR DISTRIBUTION ON FILE	LED LAMP FOR PROGRAMMED VISIBILITY SIGNAL	DRAWING NO. T.S. 8-6 SHEET NO. 1 OF 1

NO	DESCRIPTION OF REVISIONS	MADE BY	DATE
1	2012 ORIGINAL ISSUE - NEW DRAWING	C. COLE	01/12
2			
3			
4			