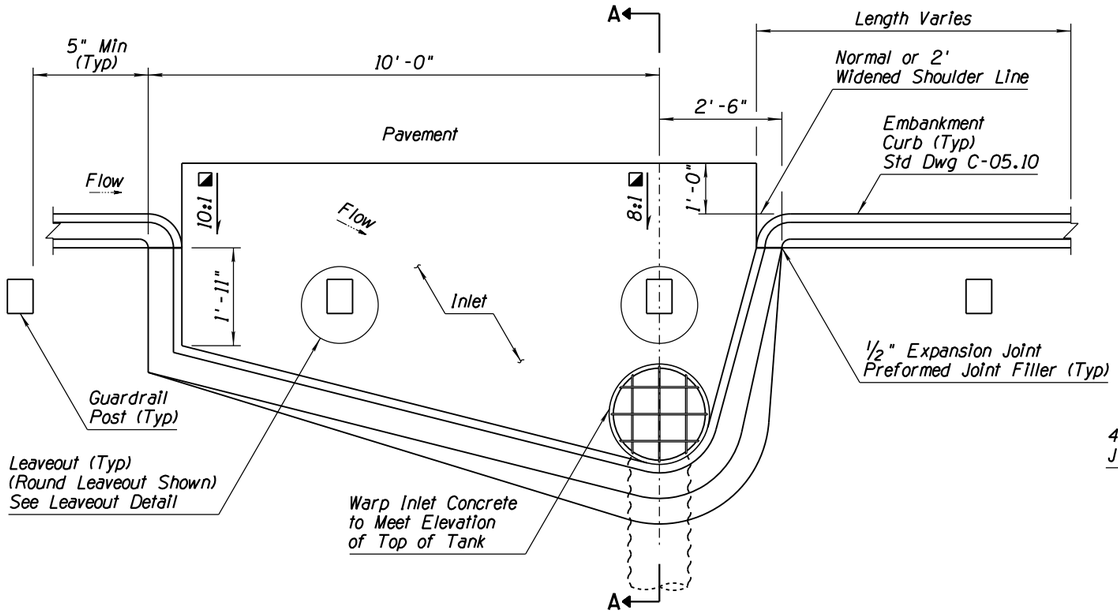

INLET PLAN

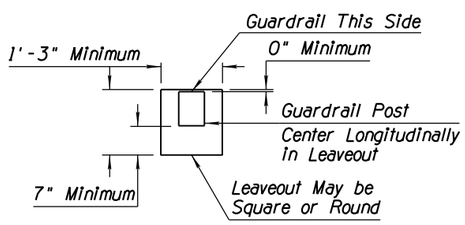

LEAVEOUT DETAIL

CMP OUTLET ON ROCK

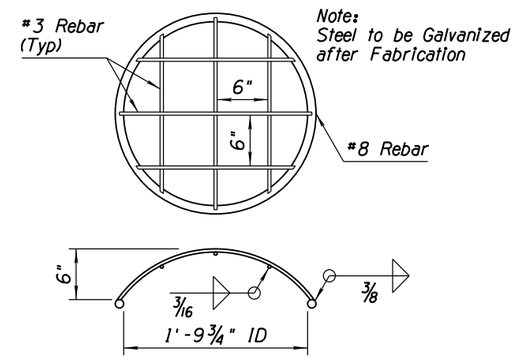

TRASH RACK DETAIL

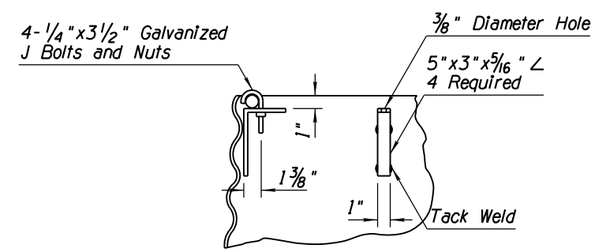

DETAIL
ANGLE SUPPORTS
FOR TRASH RACK

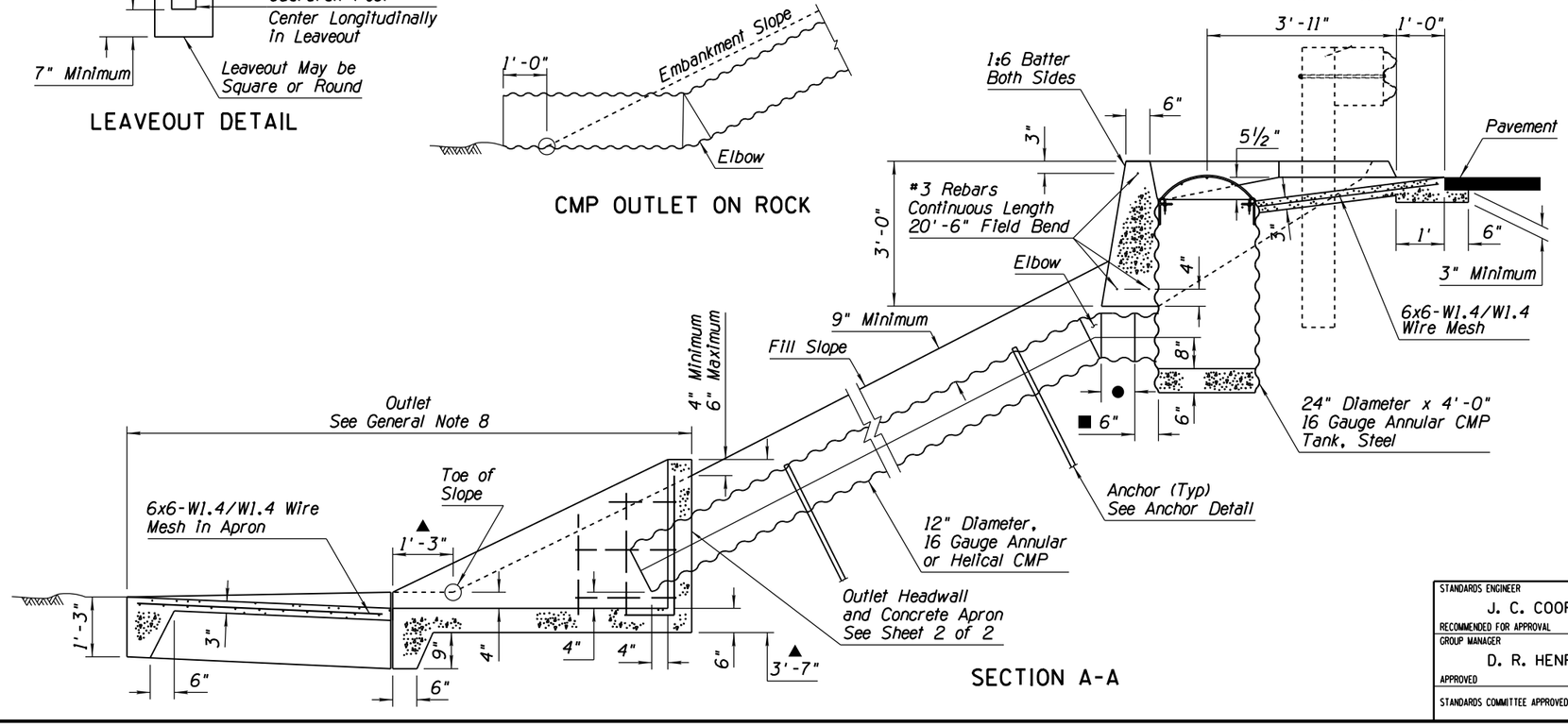

SECTION A-A

GENERAL NOTES

1. Location may be adjusted to accommodate guardrail post location.
2. Tank, stub, trash rack and angle supports shall be shop fabricated, welded and galvanized in accordance with AASHTO M36.
3. Permissible couplings shall be mechanical, heat-shrinkable polyolatin sheet; one-piece lap-type neoprene sheet or slip seam; all minimum 12" width and minimum 18 gauge.
4. Inlet invert slope shall be uniformly downward from 1' inside of embankment curb base.
5. All concrete shall be Class B. Embankment curb concrete shall be in accordance with the Std Specs.
6. Round all exposed concrete corners.
7. See Std Dwg C-04.40 for downdrain length.
8. Where rock is encountered the outlet may be omitted, as approved by the Engineer.
9. All posts within the inlet shall have a leaveout for the full depth of concrete. Leaveouts shall be filled flush to top of pavement with 3" of CLSM grout having a 28-day compressive strength between 40 and 120 PSI.

● Varies with subgrade slope and pavement structural thickness

▲ Varies with fill slope and pipe cover

■ 12" Diameter x 6", 16 Gauge Annular CMP Stub

◪ Transition slopes linearly from edge to center.

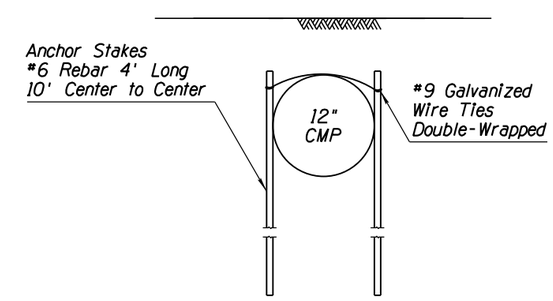

ANCHOR DETAIL

Note to Designer:
The information presented in this Standard Drawing has been prepared in accordance with recognized engineering principles and is for general use. It should not be used for specific application without competent professional examination and verification of its suitability and applicability by a licensed professional engineer. Contents within the inner border line shall not be altered.

PRIOR DISTRIBUTION DATE	05/12

STANDARDS ENGINEER J. C. COOPER RECOMMENDED FOR APPROVAL GROUP MANAGER D. R. HENRY APPROVED STANDARDS COMMITTEE APPROVED FOR DISTRIBUTION 12/17 DATE	ARIZONA DEPARTMENT OF TRANSPORTATION INFRASTRUCTURE DELIVERY AND OPERATIONS DIVISION **ROADWAY GROUP STANDARD DRAWING** DOWNDRAIN, EMBANKMENT SINGLE INLET DRAWING NO. C-04.20 Sheet 1 of 2