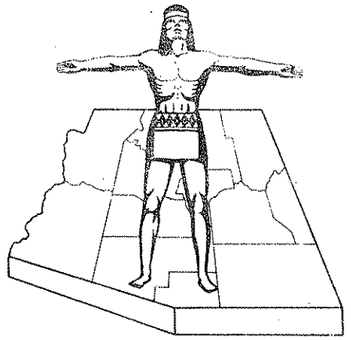

STATE OF ARIZONA
STATE HIGHWAY DEPARTMENT

RIGHT OF WAY PLAN OF THE

PRESCOTT-ASHFORK
STATE HIGHWAY

PROJECT NO. Non F-025-2(61)A

YAVAPAI
COUNTY

FED ROAD DIV. NO.	STATE	PROJECT NO.	SHEET NO.	TOTAL SHEETS
	ARIZ.	Non F-025-2(61)A		4

RIGHT OF WAY MAP NO. D-13T-354

ALIGNMENT, RIGHT OF WAY APPROVED IN ACCORDANCE WITH HIGHWAY PLANS.
DATE 4-4-1961 R. E. Lawrence ASSISTANT STATE ENGINEER

APPROVED IN ACCORDANCE WITH RESOLUTION DATED JAN 29 1963, MINUTES OF THE ARIZONA HIGHWAY COMMISSION

ARE NO.

NOTE:

THE SOLID DOT, AS SHOWN BELOW, DOES NOT DESIGNATE A R/W MARKER BUT REPRESENTS AN ANGLE POINT OR CHANGE OF DIRECTION IN THE R/W LINE & IS FOR OFFICE USE ONLY.

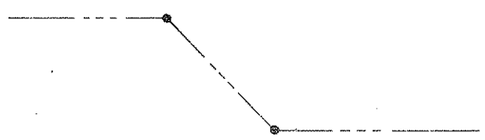

N

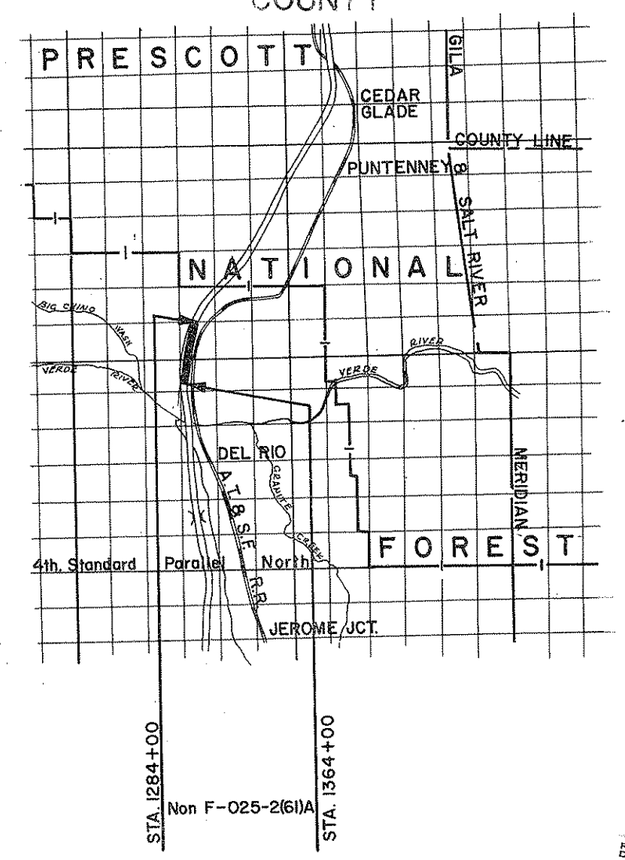

Click here for SR 89 Index

CONVENTIONAL SIGNS

HIGHWAY CENTER LINE
STATE AND NATIONAL LINES
CITY LIMITS
COUNTY LINE
TOWNSHIP AND RANGE LINES
SECTION LINE
HIGHWAY R/W LINE
RAILROAD R/W LINE
PROPERTY LINE
LOT AND PROPERTY LINE (WITHIN EXISTING R/W)
RAILROAD
COMMON R.R. AND HWY. R/W LINE
ACCESS TO BE DENIED
ACCESS OPEN
PARCEL ITEM No's
FOREST, NAT'L. MONUMENTS AND INDIAN BOUDARIES
LAND GRANT BOUNDARY
R/W MARKER

TELEPHONE LINE
POWER LINE
WATER LINE
GAS LINE
SEWER LINE
STORM DRAIN
UNDERGROUND TEL. CABLE
BARBED WIRE FENCE
CHAIN LINK FENCE
ANY OTHER WIRE FENCE
WOODEN FENCE
POWER POLE WITH TRANSFORMER
DOWN GUY
LIGHT POLE
FIRE HYDRANT
WATER METER
WATER VALVE
MANHOLE
EXIST. ROAD OR TRAVELED WAY
GAS METER
GAS VALVE

REDUCED SIZE DO NOT SCALE

ARIZONA HIGHWAY COMMISSION
APPROVED
STATE HIGHWAY ENGINEER
DEPUTY STATE ENGINEER DATE

DEPARTMENT OF COMMERCE
BUREAU OF PUBLIC ROADS
APPROVED
DIVISION ENGINEER DATE

MAP REVISIONS

DATE	NAME	DESCRIPTION
4-25-61	T. WOODY A.	CHANGED R/W TAKE ON ITEM C-416 SEC 3
7-25-61	T. WOODY A.	CHANGED POWNALL TRACK (C-418) TO AGREE WITH SURVEY.
7-26-61	L. Draper	On Sheet 3 Added Holiday Lake Estates & Red R/W In Area Of Same.
3-14-62	Childers	Added Subdivision, R.R. R/W, 35' Constr. Ease. & Added & Figured Items C-416-1,2,3

PRESCOTT—ASHFORK HIGHWAY
WISHING WELL—PAULDEN
YAVAPAI COUNTY

Click here for SR 89 Index

PROJ. NO.	Non F-025-2(61)A
DRAWING NO.	D-13T-354
SHEET NO.	2 of 4
DRAWN BY	T. WOODY MEEGAN
DATE COMP.	4-4-61
SCALE	1" = 100'

OWNERSHIP TABLE / ACQ. RECORD

ITEM NO.	OWNER	DESCRIPTION	AREA TAKEN	AREA REMAINING	DATE PROP. ACQUIRED	SHEET NO.	COMM APPL	TYPE & DATE OF INSTRUMENT	RECORDED DATE	RECORDED BK.	RECORDED PG.
C-416	The Estate of Jack Morgan BAY DEVELOPMENT CO.	PT. W½ SEC. 3 T. 17 N. R. 2 W.	2.9 AC. ~~3.12~~	129.4 Ac.		3 & 4		R/E 7-26-61	10-2-61	234	387-88
C-417	Wine Glass Ranches Inc. D.R.O. Gilbert A. Campbell & Et Al C.P. C.H. Willis & Et Al C.P.	Pt. of W½ Sec 3 T17N R2W Pt. of Sec 4 T17N R2W	.34 A. 6.85 A.			3 & 4	10-23-62	F.O.C. 12-20-62	3-19-63	284	414-416
C-418	Essie M Pownall	Pt. of SW¼ Sec 3 T17N R2W Pt. of SE¼ Sec 4 T17N R2W	.92 A. .03 A.	7.11 A.		4	9-11-61	Esm't. 2-26-62	4-9-62	252	262-3
C-419	Jessie Ruth Gilpin s/s	Pt. of SE¼ Sec 4 T17N R2W	None	17,672.84 sq.ft.		4		NO TAKE			
C-420	Cadco Eneerprises Inc.	NW¼ Sec 34 T.18N. R2W Pt. of NE¼ Sec 34 T.18N. R2W.	3.22 A. None	151.72 A 10.45 A		2	6-30-61	Esm't. 6-19-61	8-23-61	229	10-11
C-416-1	Shollenburger, C.L.	Pt. of W½ Sec. 3, T.18N, R2W	7.71	47.671	F.O.C. 2-8-65 BK. 351, Pg. 500	3 & 4	9-15-64	F.O.C. 2-8-65	2-23-65	351	500-02
C-416-2	Abra Land & Development Co.	Pt. of SW¼ Sec. 34, T18N, R2W	3.42					UNAVAILABLE			
C-416-3	First National Land Co.	Pt. of SW¼ Sec. 34, T18N, R2W	3.12								
C-416-~~4~~ A	A.T. + S.F. R.R.	Pt. of SW¼NW¼ Sec. 3, T17N, R2W	47 SEE NOTE			3	5-6-66	Esm't. 1-3-66	5-19-66	397	565-571

NOTE: AREA TAKEN TO BE EXCHANGED FOR EXISTING R/W AS IT TRAVERSES THE PROPOSED R.R. ALIGNMENT.

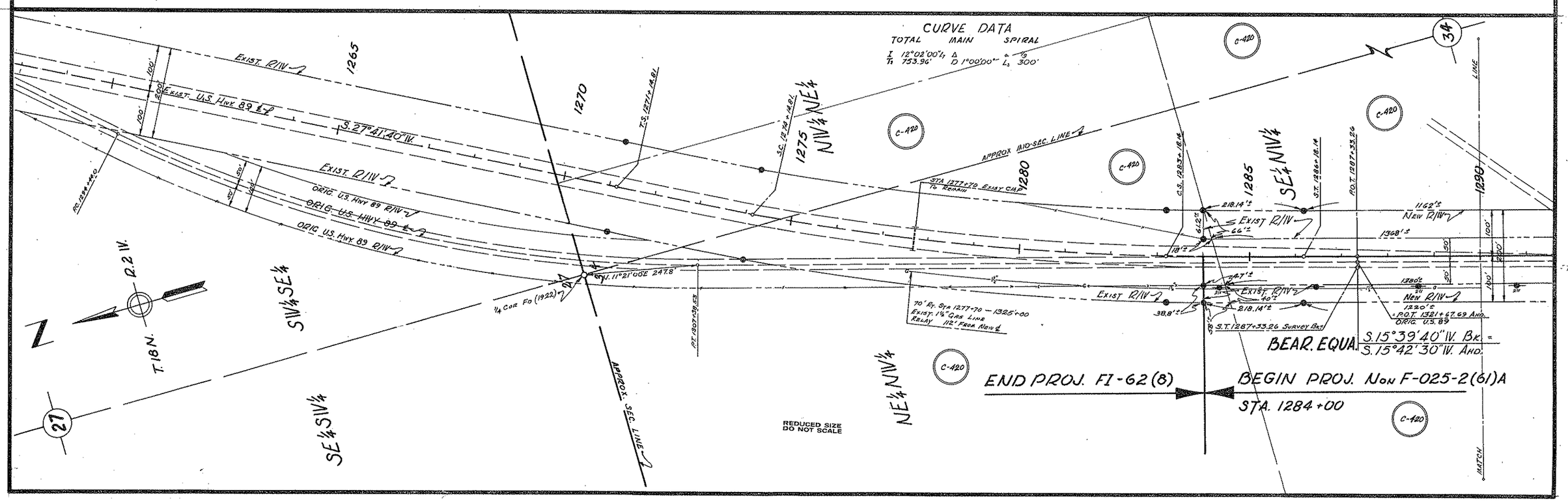

C.O.#5508, 4-9-80, Rev. Ownership & Area taken on Par. C-416 J.Mc.

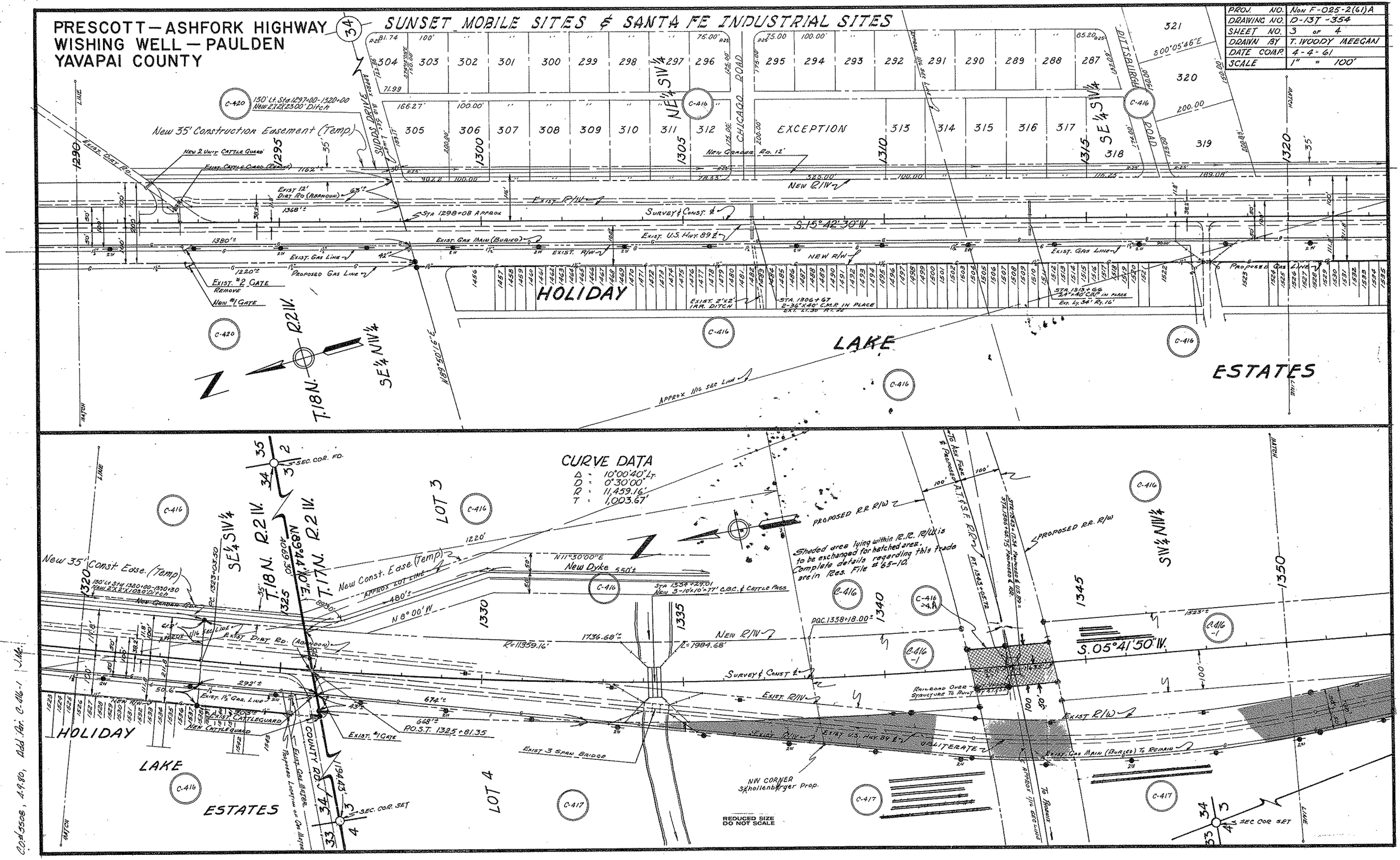

Click here for SR 89 Index

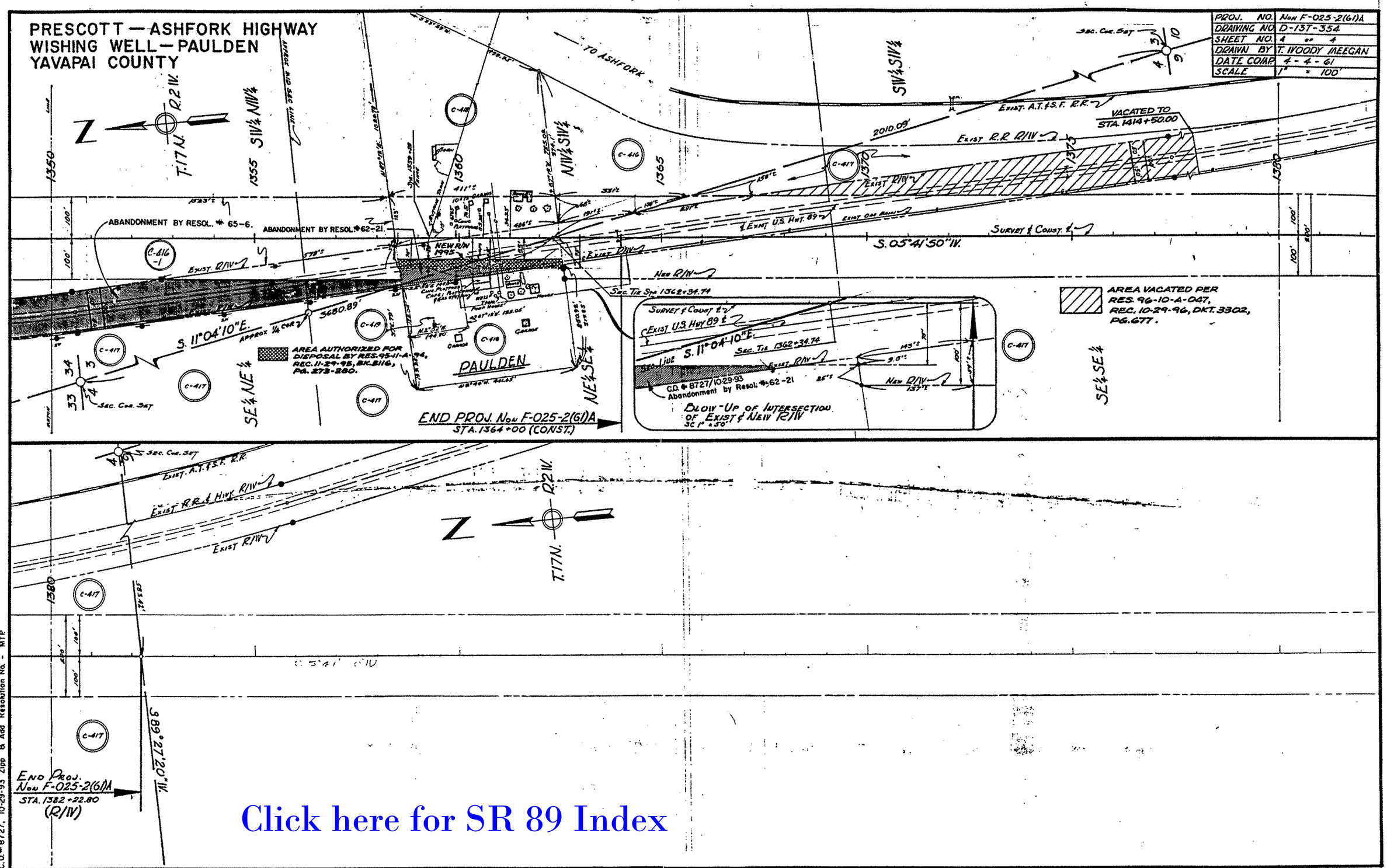

Click here for SR 89 Index

Click here for SR 89 Index

47/99

RIGHT OF WAY MAP
SAN FRANCISCO ST.

Sections 27 & 34, Twp. 18 North, Range 2 West
Gila & Salt River Base & Meridian
Yavapai County, Arizona

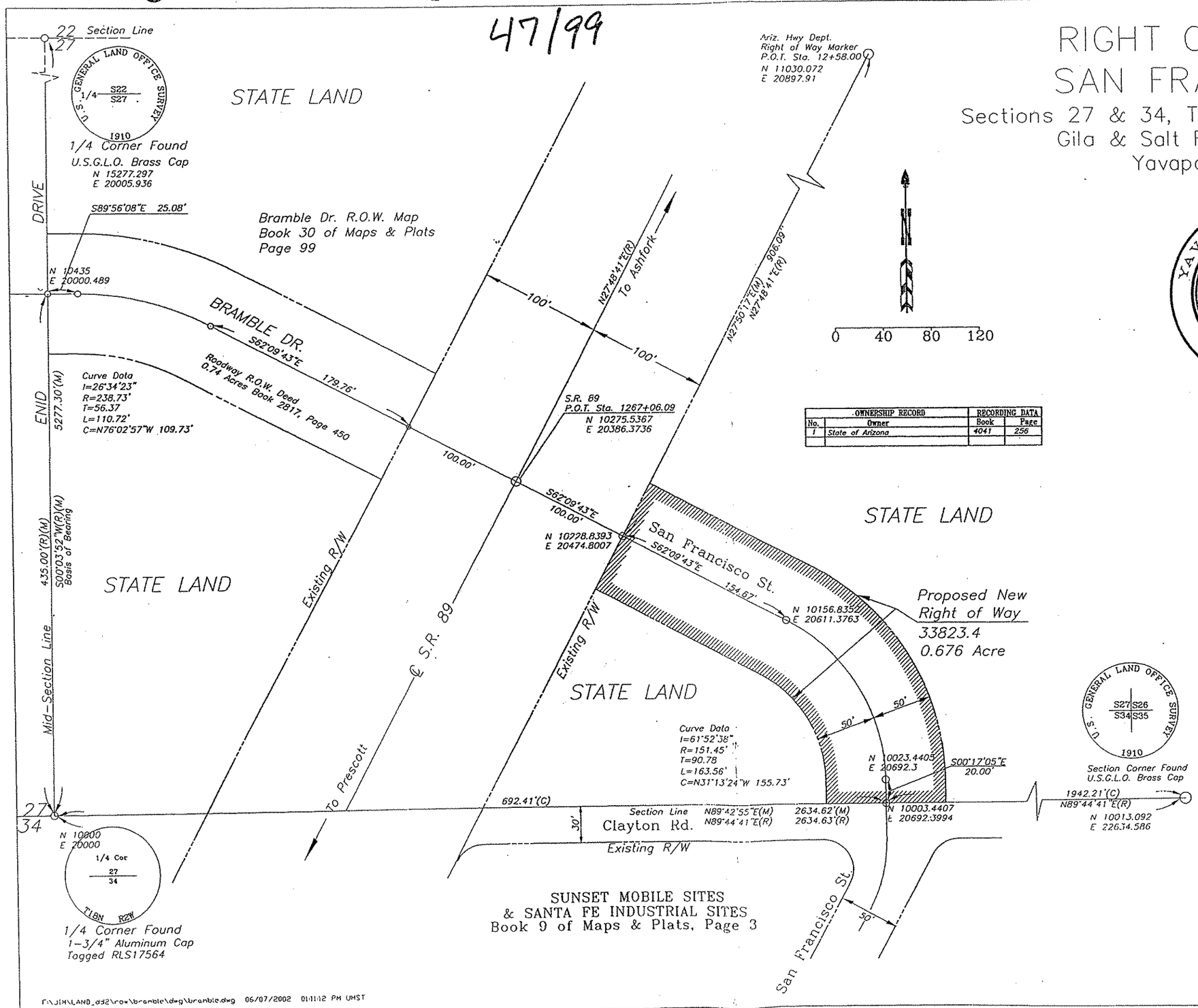

OWNERSHIP RECORD		RECORDING DATA	
No.	Owner	Book	Page
1	State of Arizona	4041	256

#3595998
FILED AND RECORDED AT REQUEST OF
Yavapai County Public Works Dept
June 23, A.D. 2003
AT 11:00 O'CLOCK A.M.
BOOK 47 of Maps + Plats
PAGE 99
Records of Yavapai County, Arizona
Patsy Jenney-Colon
County Recorder
Deputy Recorder

This is to certify that the survey of the property shown hereon was done under my supervision during the month of April, 2002, and is correct to the best of my knowledge and belief.

Wynne Law
Registered Land Surveyor

06/23/2003
Date

YAVAPAI COUNTY ENGINEERS OFFICE 1100 COMMERCE DR. PRESCOTT, AZ. 771-3183	YAVAPAI COUNTY BOARD OF SUPERVISORS CHERAL BROWNLOW A. G. (CHIP) DAVIS LORNA STREET	SURVEYED BY: M. Bunn DATE April 1, 2002
REGISTERED LAND SURVEYOR CERTIFICATE NO. 21073 WYNNE A. LAW ARIZONA U.S.A.	RIGHT OF WAY MAP SAN FRANCISCO ST.	DRAWN BY: J. Dunham DATE May, 2002
		CHECKED BY: J. Statler DATE June, 2002
		CHECKED BY: W. Law DATE June, 2002
		SHEET 1 of 1
	RICHARD STRAUB PUBLIC WORKS DIRECTOR	W.O. No. 21-11101

F:\JIM\LAND_dd2\row\bramble\dwg\bramble.dwg 06/07/2002 01:11:12 PM UMST

30/99

RIGHT OF WAY MAP
BRAMBLE DRIVE

Section 27, Twp. 18 North, Range 2 West
Gila & Salt River Base & Meridian
Yavapai County, Arizona

Click here for SR 89 Index

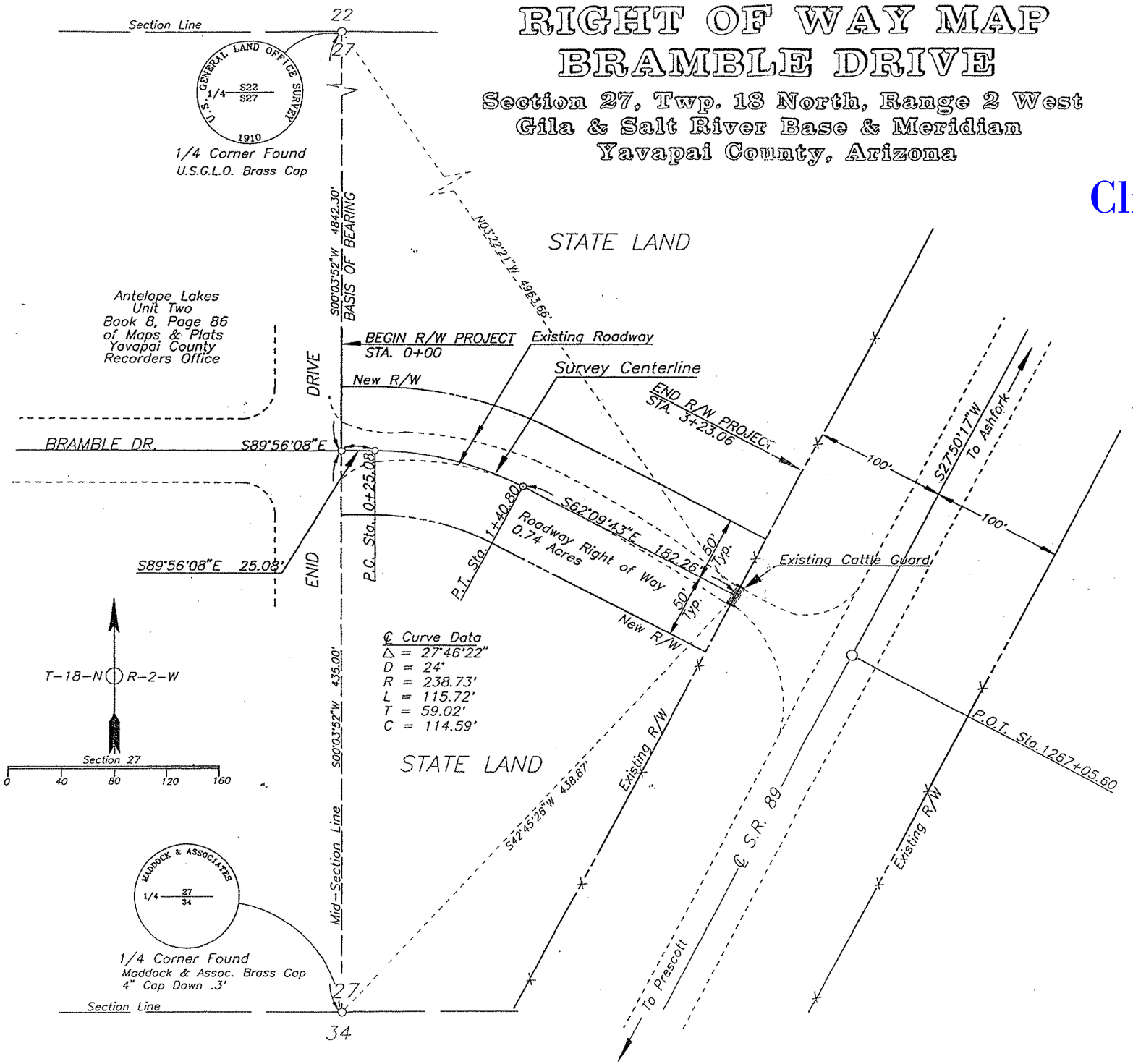

Approved by the Yavapai County Board of Supervisors on this 7th day of March, 1993.

Chairman Date

Attest: Clerk Date

This is to certify that the survey of the property shown hereon was done under my supervision during the month of March, 1993, and is correct to the best of my knowledge and belief.

William F. York
William F. York
Registered Land Surveyor

Fee # 9424318
Recorded and Recorded at request of Yavapai County Engineering
April 21 A.D. 19 94
at 11:55 o'clock P.M.
Book 30
Page 99
Records of Yavapai County, Arizona
County Recorder
Deputy Recorder

YAVAPAI COUNTY ENGINEERS OFFICE 500 S. MARINA ST. PRESCOTT, AZ. 771-3183	YAVAPAI COUNTY BOARD OF SUPERVISORS CHORAL BROWNLOW BILL FOLDMIDER CARLTON CAMP	SURVEYED BY: M. Bunn DATE 3-93
	Bramble Drive Right of Way Map	DRAWN BY: J. Dunham DATE 3-93
		CHECKED BY: DATE 8/23/93
		SHEET 1 OF 1
	C:\ACAD11\ROW\BRAMBLE1	W.O. No. 93-22
	COUNTY ENGINEER DATE	FIELD BOOK NO. 1020

Click here for SR 89 Index

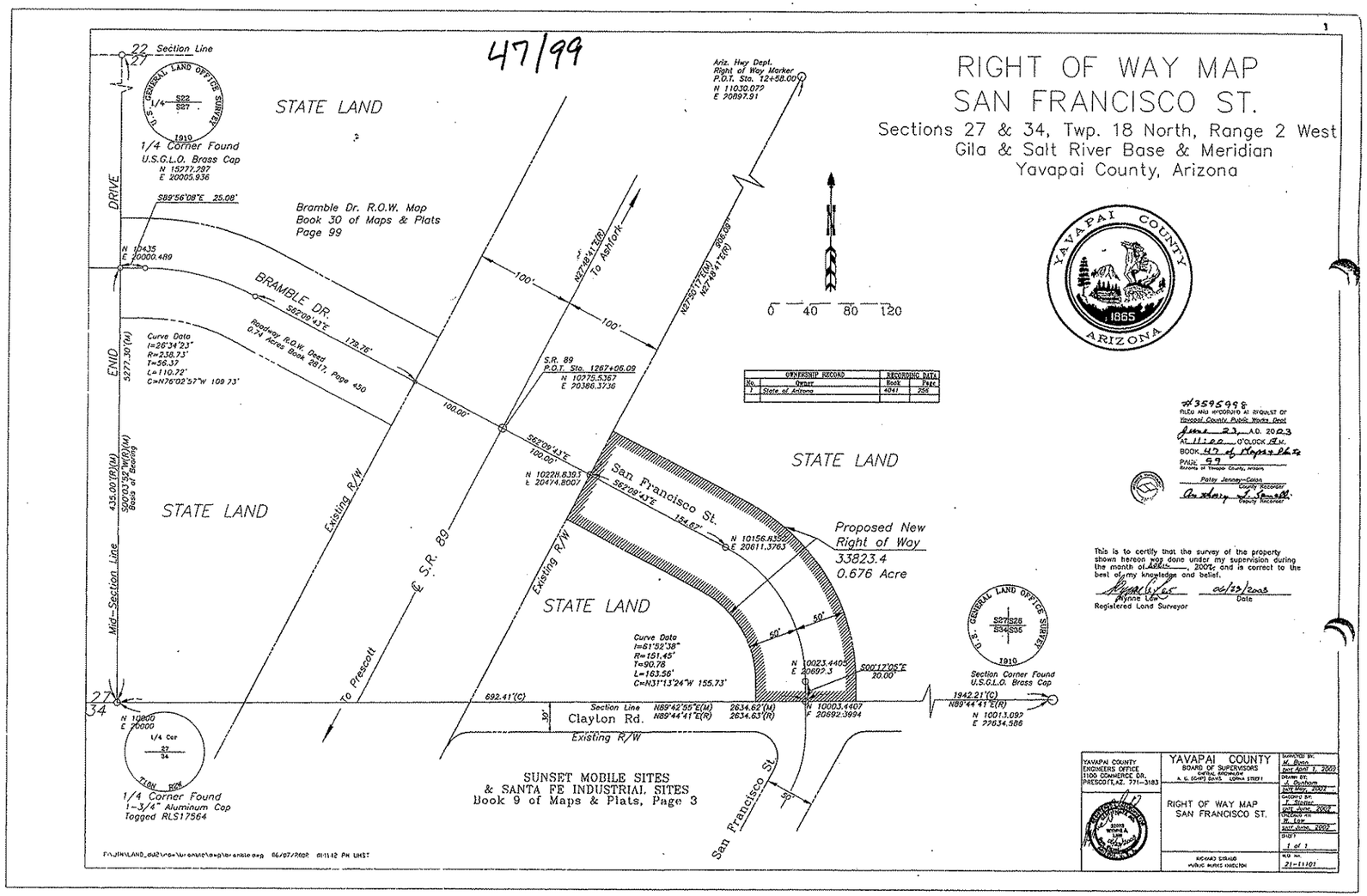

Click here for SR 89 Index

OFFICE OF THE
PUBLIC WORKS DEPARTMENT
Road Division Engineering Division Solid Waste Division Emergency Management
1100 Commerce Drive
Prescott, Arizona 86305
Phone (928) 771-3183
FAX (928) 771-3167

Richard L. Straub
Director

JUN 27 2003

June 26, 2003

Greg Potter, P.E.
Sunrise Engineering, Inc.
1930 South Alma School Road, Suite A-114
Mesa, AZ 85210

Re: Highway 89/Bramble Dr. Turn Lane Widening Project-Paulden

Dear Greg:

The attached Right of Way Map (Book 47 Page 99 of Maps & Plats) for San Francisco St. is for your use for design of the proposed roadway improvements. This R/W acquired by Yavapai County is per the ADOT Intergovernmental Agreement #25892 filed 3/19/03 for this project. County understands that this project construction is proposed for FY'05.

Please contact me if you have any questions.

Sincerely,

Norm Davis, Jr.

Norm Davis, Jr., P.E.
Assistant County Engineer

Cc: Beth Federico, Right of Way Specialist

STATE OF ARIZONA
DEPARTMENT OF TRANSPORTATION
INTERMODAL TRANSPORTATION DIVISION

PROJECT PLANS

RECEIVED
JUL 07 2005
MW PLANS

ADOT

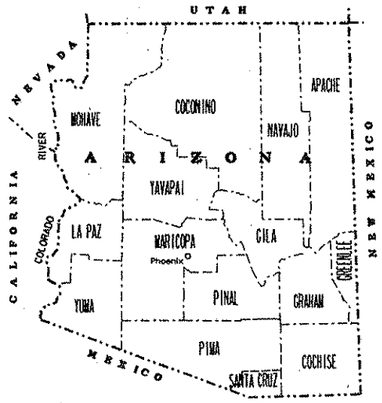

STATE HIGHWAY
PRESCOTT-ASH FORK HIGHWAY (SR 89)
S-089-B-502
089 YV 338

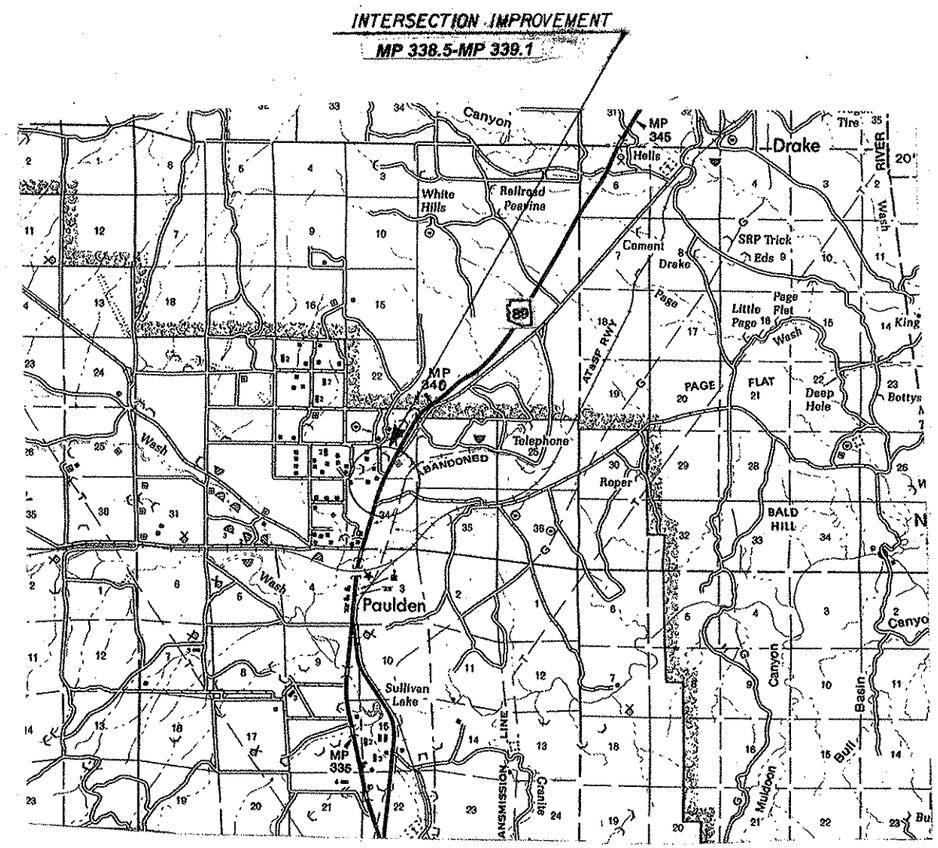

N
T18N R2W

SEE GEN'L NOTES # SHEET 9

REDUCED SIZE
DO NOT SCALE

ARIZONA DEPARTMENT OF TRANSPORTATION
INTERMODAL TRANSPORTATION DIVISION
APPROVED: SAM MAROUFKHANI, P.E.
ACTING STATE ENGINEER

APPROVED DATE 7/1/05
ASSISTANT STATE ENGINEER
Mary Vlpaima

BRAMBLE INTERSECTION

s:\rdwyeng\users\HP071\ 09:42:05 AM

TRACS NO. H6172 01 C | 089-B-502 | ___ OF ___

Click here for SR 89 Index

ADOT STANDARD DRAWINGS
C STANDARDS

F.H.W.A. REGION	STATE	PROJECT NO.	SHEET NO.	TOTAL SHEETS	AS BUILT
9	ARIZ.	S-089-B-502	1A	30	

089 YV 338

ISSUE OR REVISION DATE	STANDARD NO.	SUBJECT
		CONSTRUCTION
09/04	C-01.10	SYMBOL LEGEND (4 SHEETS)
09/04	C-01.30	GENERAL ABBREVIATIONS (3 SHEETS)
1/93	C-02.10	SLOPES, DIVIDED HIGHWAYS
1/93	C-02.20	SLOPES, PRIMARY ROADWAYS
09/04	C-02.30	SLOPES, SECONDARY/MISC ROADWAYS
9/04	C-03.10 SH 1	DITCHES, CHANNELS, DIKES AND BERMS, DITCHES AND CHANNELS
9/04	C-03.10 SH 2	DITCHES, CHANNELS, DIKES AND BERMS, DIKES
9/04	C-03.10 SH 3	DITCHES, CHANNELS, DIKES AND BERMS, DITCH DIKE
3/94	C-03.10 SH 4	DITCHES, CHANNELS, DIKES AND BERMS, PIPE BERMS
9/04	C-03.10 SH 5	DITCHES, CHANNELS, DIKES AND BERMS, HEADWALL BERMS
9/04	C-04.10	SPILLWAY, EMBANKMENT
9/04	C-04.20	DOWNDRAIN, EMBANKMENT
9/04	C-04.30	SPILLWAY LENGTH TABLE
9/04	C-04.40	DOWNDRAIN LENGTH TABLE
9/04	C-04.50	DOWNDRAIN ENERGY DISSIPATOR
9/04	C-05.10	CURB & GUTTER, CURB, GUTTER
9/04	C-05.12 SH 1	CURB & GUTTER TRANSITIONS
9/04	C-05.12 SH 2	CURB & GUTTER TRANSITIONS
9/04	C-05.12 SH 3	CURB AND GUTTER TRANSITIONS
9/04	C-05.20 SH 1	CONCRETE DRIVEWAYS & SIDEWALKS, DRIVEWAYS
9/04	C-05.20 SH 2	CONCRETE DRIVEWAYS & SIDEWALKS, SIDEWALKS
9/04	C-05.30 SH 1	SIDEWALK RAMP, TYPE A
9/04	C-05.30 SH 2	SIDEWALK RAMP, TYPE B
9/04	C-05.30 SH 3	SIDEWALK RAMP, TYPE C
9/04	C-05.30 SH 4	SIDEWALK RAMP, TYPE D
9/04	C-05.30 SH 5	SIDEWALK RAMP, TYPE E
9/04	C-05.30 SH 6	SIDEWALK RAMP, TYPE F
9/04	C-05.30 SH 7	SIDEWALK RAMP, DETECTABLE WARNING STRIP
9/04	C-05.40	MEDIAN PAVING AND NOSE TAPER
9/04	C-05.50	CONCRETE BUS BAY
9/04	C-06.10 SH 1	DRIVEWAY & TURNOUT LAYOUTS
9/04	C-06.10 SH 2	DRIVEWAY & TURNOUT LAYOUTS
9/04	C-07.01 SH 1	PCCP JOINTS
9/04	C-07.01 SH 2	PCCP JOINTS
9/04	C-07.02	LOAD TRANSFER DOWEL ASSEMBLY
9/04	C-07.03 SH 1	PCCP JOINT LOCATIONS, MAINLINE SKEWED JOINTS
9/04	C-07.03 SH 2	PCCP JOINT LOCATIONS, MAINLINE SKEWED JOINTS
9/04	C-07.03 SH 3	PCCP JOINT LOCATIONS, MAINLINE SKEWED JOINTS
9/04	C-07.03 SH 4	PCCP JOINT LOCATIONS, MAINLINE SKEWED JOINTS
9/04	C-07.03 SH 5	PCCP JOINT LOCATIONS, MAINLINE NON-SKEWED JOINTS
9/04	C-07.03 SH 6	PCCP JOINT LOCATIONS, MAINLINE NON-SKEWED JOINTS
9/04	C-07.03 SH 7	PCCP JOINT LOCATIONS, MAINLINE NON-SKEWED JOINTS
9/04	C-07.03 SH 8	PCCP JOINT LOCATIONS, MAINLINE NON-SKEWED JOINTS
9/04	C-07.04 SH 1	PCCP JOINT LOCATIONS, PARALLEL TYPE ENTRANCE RAMP WITH AUXILIARY LANE
9/04	C-07.04 SH 2	PCCP JOINT LOCATIONS, PARALLEL TYPE EXIT RAMP WITH AUXILIARY LANE
9/04	C-07.04 SH 3	PCCP JOINT LOCATIONS, TAPER TYPE ENTRANCE RAMP
9/04	C-07.04 SH 4	PCCP JOINT LOCATIONS, TAPER TYPE EXIT RAMP
9/04	C-07.04 SH 5	PCCP JOINT LOCATIONS, CROSSROAD AND RAMP TERMINI
9/04	C-08.20	PAVED GORE AREA
9/04	C-10.00	GUARDRAIL MEASUREMENT LIMITS
9/04	C-10.01	GUARDRAIL INSTALLATION, TYPE A AND REFLECTOR TAB
9/04	C-10.02	GUARDRAIL INSTALLATION, TYPE B AND REFLECTOR TAB
9/04	C-10.03	W-BEAM GUARDRAIL, G4(1W) AND G4(2W), BLOCKED-OUT TIMBER POST
9/04	C-10.04	W-BEAM GUARDRAIL, G4(1S), BLOCKED-OUT STEEL POST
9/04	C-10.05 SH 1	W-BEAM GUARDRAIL, G4(MODIFIED) WITH FREEWAY CURB AND GUTTER
9/04	C-10.05 SH 2	W-BEAM GUARDRAIL, G4(MODIFIED) WITH FREEWAY CURB AND GUTTER
9/04	C-10.06 SH 1	W-BEAM GUARDRAIL, NESTED, TYPES 1 AND 2
9/04	C-10.06 SH 2	W-BEAM GUARDRAIL, NESTED, TYPE 3
9/04	C-10.07 SH 1	W-BEAM GUARDRAIL, BOLTED ANCHOR
9/04	C-10.07 SH 2	W-BEAM GUARDRAIL, BOLTED ANCHOR
9/04	C-10.08	W-BEAM GUARDRAIL, END ANCHOR
9/04	C-10.20	THRIE-BEAM GUARDRAIL, G9, BLOCKED-OUT STEEL POST
9/04	C-10.30	GUARDRAIL TRANSITION, THRIE BEAM TO CONCRETE HALF BARRIER, 32" TYPE 'F', (APPROACH), AC PAVEMENT
9/04	C-10.31	GUARDRAIL TRANSITION, THRIE BEAM TO CONCRETE HALF BARRIER, 32" TYPE 'F', (APPROACH) PCCP
9/04	C-10.32	GUARDRAIL TRANSITION, W-BEAM TO CONCRETE HALF BARRIER, 32" TYPE 'F', (DEPARTURE)
9/04	C-10.40	CONCRETE MEDIAN BARRIER, 32" TYPE 'F', CAST-IN-PLACE
9/04	C-10.41	CONCRETE MEDIAN BARRIER, 42" TYPE 'F', CAST-IN-PLACE
9/04	C-10.42 SH 1	GLARE SCREEN, CONCRETE MEDIAN BARRIER
9/04	C-10.42 SH 2	GLARE SCREEN, CONCRETE MEDIAN BARRIER
9/04	C-10.42 SH 3	GLARE SCREEN, CONCRETE MEDIAN BARRIER
9/04	C-10.50 SH 1	CONCRETE HALF BARRIER, 32" TYPE 'F', CAST-IN-PLACE
9/04	C-10.50 SH 2	CONCRETE HALF BARRIER, 32" TYPE 'F', PRECAST
9/04	C-10.51	CONCRETE HALF BARRIER, 32" TYPE 'F' WITH SIDEWALK
9/04	C-10.52	CONCRETE HALF BARRIER, 32" TYPE 'F' WITH GUTTER
9/04	C-10.53	CONCRETE HALF BARRIER, 42" TYPE 'F' WITH GUTTER
9/04	C-10.54 SH 1	CONCRETE HALF BARRIER, 32" TYPE 'F' AT PIERS, CAST-IN-PLACE
9/04	C-10.54 SH 2	CONCRETE HALF BARRIER, 32" TYPE 'F' AT PIERS, PRECAST
9/04	C-10.54 SH 3	CONCRETE HALF BARRIER, 32" TYPE 'F' AT PIERS, LAYOUT
9/04	C-10.55 SH 1	CONCRETE HALF BARRIER, 42" TYPE 'F' AT PIERS, CAST-IN-PLACE
9/04	C-10.55 SH 2	CONCRETE HALF BARRIER, 42" TYPE 'F' AT PIERS, PRECAST
9/04	C-10.55 SH 3	CONCRETE HALF BARRIER, 42" TYPE 'F' AT PIERS, LAYOUT
9/04	C-10.70 SH 1	CONCRETE HALF-BARRIER TRANSITION TO VERTICAL, 32" TYPE 'F' WITH CAISSONS
9/04	C-10.70 SH 2	CONCRETE HALF-BARRIER TRANSITION TO VERTICAL, 32" TYPE 'F' WITH CAISSONS
9/04	C-10.70 SH 3	CONCRETE HALF-BARRIER TRANSITION TO VERTICAL, 32" TYPE 'F' WITH CAISSONS
9/04	C-10.71 SH 1	CONCRETE HALF-BARRIER TRANSITION TO VERTICAL, 32" TYPE 'F' WITH CURB & GUTTER
9/04	C-10.71 SH 2	CONCRETE HALF-BARRIER TRANSITION TO VERTICAL, 32" TYPE 'F' WITH CURB & GUTTER
9/04	C-10.72 SH 1	CONCRETE HALF-BARRIER TRANSITION TO VERTICAL, 42" TO 32" TYPE 'F' WITH CAISSONS
9/04	C-10.72 SH 2	CONCRETE HALF-BARRIER TRANSITION TO VERTICAL, 42" TO 32" TYPE 'F' WITH CAISSONS
9/04	C-10.72 SH 3	CONCRETE HALF-BARRIER TRANSITION TO VERTICAL, 42" TO 32" TYPE 'F' WITH CAISSONS
9/04	C-10.73 SH 1	CONCRETE HALF-BARRIER TRANSITION TO VERTICAL, 42" TO 32" TYPE 'F' WITH GUTTER
9/04	C-10.73 SH 2	CONCRETE HALF-BARRIER TRANSITION TO VERTICAL, 42" TO 32" TYPE 'F' WITH GUTTER
9/04	C-10.74	CONCRETE HALF-BARRIER TRANSITION, 42" TO 32" TYPE 'F'
9/04	C-10.75 SH 1	CONCRETE HALF-BARRIER TRANSITION, TYPE 'F', TANGENT DEPARTURE TYPE 1
9/04	C-10.75 SH 2	CONCRETE HALF-BARRIER TRANSITION, TYPE 'F', TANGENT DEPARTURE TYPE 2
9/04	C-10.76	CONCRETE HALF-BARRIER TRANSITION, TYPE 'F' AT RADIUS, 32" TO 0"
9/04	C-10.77	CONCRETE HALF-BARRIER TRANSITION, END TERMINAL CURB AND GUTTER
9/04	C-11.20	CATTLE GUARD, DRAINAGE
7/94	C-12.10 SH 1	FENCE, WOVEN WIRE
7/94	C-12.10 SH 2	FENCE, BARBED WIRE
9/04	C-12.10 SH 3	FENCE, TYPES 1 AND 2 GATES, FLOOD GATE
9/04	C-12.10 SH 4	FENCE, FLOOD GATE INSTALLATION
7/94	C-12.10 SH 5	FENCE, MISCELLANEOUS DETAILS
9/04	C-12.20 SH 1	FENCE, CHAIN LINK, TYPE 1
9/04	C-12.20 SH 2	FENCE, CHAIN LINK, TYPE 2
9/04	C-12.20 SH 3	FENCE, CHAIN LINK, GATES
9/04	C-12.30 SH 1	FENCE, CHAIN LINK CABLE BARRIER
9/04	C-12.30 SH 2	FENCE, CHAIN LINK CABLE BARRIER
9/04	C-12.30 SH 3	FENCE, CHAIN LINK CABLE BARRIER
9/04	C-13.10 SH 1	PIPE CULVERT INSTALLATION
9/04	C-13.10 SH 2	PIPE CULVERT INSTALLATION
9/04	C-13.15	TYPICAL PIPE INSTALLATION
3/04	C-13.20	PIPE, REINFORCED CONCRETE END SECTION
9/04	C-13.25	PIPE, CORRUGATED METAL END SECTION
9/04	C-13.30	PIPE AND PIPE ARCH, CORRUGATED METAL, CONCRETE INVERT PAVING
9/04	C-13.55	PIPE, CATTLE-VEHICLE PASS, MITERED END TREATMENT
9/04	C-13.60	SLOTTED DRAIN DETAILS
9/04	C-13.65	SLOTTED DRAIN INSTALLATION DETAILS
7/94	C-13.70	STORM DRAIN CONNECTION DETAILS
9/04	C-13.75	STORM DRAIN OUTLET BARRIER GATE
9/04	C-13.76	STORM DRAIN OUTLET AND STORM DRAIN PLUG
9/04	C-13.80	PIPE COLLAR DETAILS
9/04	C-15.10	CATCH BASIN, TYPE 1
7/01	C-15.20 SH 1	CATCH BASIN, TYPE 3
5/97	C-15.20 SH 2	CATCH BASIN, TYPE 3
9/04	C-15.20 SH 3	CATCH BASIN, ACCESS FRAME AND COVER DETAILS
5/97	C-15.30	CATCH BASIN, TYPE 4
9/04	C-15.40 SH 1	CATCH BASIN, TYPE 5
5/97	C-15.40 SH 2	CATCH BASIN, TYPE 5
7/01	C-15.50	CATCH BASIN, FRAME AND GRATE
9/04	C-15.70 SH 1	CATCH BASIN, MISCELLANEOUS DETAILS
9/04	C-15.70 SH 2	CATCH BASIN, MISCELLANEOUS DETAILS
9/04	C-15.75	CATCH BASIN, DROP INLET
9/04	C-15.80	CATCH BASIN, FLUSH
9/04	C-15.81	CATCH BASIN, SIDE SLOPE
9/04	C-15.90	CATCH BASIN, MEDIAN DIKE, PRECAST
7/01	C-15.91 SH 1	FREEWAY CATCH BASIN DETAILS
9/04	C-15.91 SH 2	FREEWAY CATCH BASIN DETAILS
9/04	C-15.92 SH 1	CATCH BASIN WITH TYPE 'F' CONCRETE HALF BARRIER
9/04	C-15.92 SH 2	CATCH BASIN WITH TYPE 'F' CONCRETE HALF BARRIER
9/04	C-16.40	IRRIGATION SLEEVES
9/04	C-17.10	RAIL BANK PROTECTION FOR DRAINAGEWAYS, TYPES 1, 2 & 3
9/04	C-17.15	RAIL BANK PROTECTION AT ABUTMENTS, TYPES 4, 5 & 6
9/04	C-17.20	BANK PROTECTION FOR DRAINAGEWAYS, TYPES 7, 8 & 9
9/04	C-18.10 SH 1	MANHOLE, RISER DETAILS
9/04	C-18.20 SH 2	MANHOLE, BASE DETAILS, NORMAL INSTALLATION
9/04	C-18.10 SH 3	MANHOLE, FRAME AND COVER DETAILS
9/04	C-19.10 SH 1	FORD, CONCRETE WALLS
9/04	C-19.20 SH 2	FORD, TYPES 1 AND 2
9/04	C-21.10	SURVEY MONUMENT, FRAME AND COVER, RIGHT-OF-WAY MARKER
9/04	C-21.20	SURVEY MARKER

REV.: 10/20/04

REDUCED SIZE
DO NOT SCALE

Click here for SR 89 Index

ADOT STANDARD DRAWINGS REVISION DATES and STANDARD NO.'s REVIEW		
	NAME	DATE
CONSTRUCTION Standards		

Click here for SR 89 Index

F.H.W.A. REGION	STATE	PROJECT NO.	SHEET NO.	TOTAL SHEETS	AS BUILT
9	ARIZ.	S-089-B-502	2	30	
		089 YV 338			

EARTHWORK QUANTITIES

Roadway Excavation	5020 CY
Shrink	500 CY
Embankment (Including Ground Compaction)	5093 CY
Borrow (No Shrink or Swell Applied)	591 CY

EARTHWORK FACTORS

Station	Shrink/Swell	Ground Compaction
1252+51 to 1281+61	10% Shrink	0.1 '

SOIL VALUES

Station	ph	Resistivity
1252+51 to 1281+61	8.7	332 ohm-cm

DESIGN DATA (SR 89)

2000 ADT = 1761
2020 ADT = 3522
Min Design Speed = 70 MPH

LENGTH OF PROJECT

Sta 1252+51.00 to 1281+61.00 = 2910.00 LF (SR 89)
Sta 16+64.00 to 24+33.23 = 769.23 LF (Bramble Dr/San Francisco St)

Gross & Net Length = 3679 LF = 0.70 Miles

MIDPOINT OF PROJECT

Modified Central Zone
State Plane Coordinates

X=537,185
Y=1,423,588

INDEX OF SHEETS

Sheet No.	Sheet Type
1	Face Sheet
1A-1B	ADOT Standard Drawings
2-3	Design Sheets
4	Geometric Layout Sheet
5	New Pipe Summary Sheet
6-8	SR 89 Plan & Profile Sheets
9	Bramble Drive Plan & Profile Sheet
10	Intersection Detail Sheet
11	Pipe Profile Details
12	Signing & Striping Notes/Quantities
13	Sign Summary Sheet
14	Sign Format & R/W Marker Detail Sheet
15-18	Signing & Striping Plan Sheets
19-21	Construction Sequence/Traffic Control Sheets
22	AZPDES SWPPP Index Sheet
23-24	Erosion and Sediment Control Plans
25	Erosion and Sediment Control Details
26-30	ADOT Standard Detail X-11.10 (Roadway Cattle Guard)

REDUCED SIZE
DO NOT SCALE

GENERAL NOTES

1. The roadway plans have been designed utilizing the 2000 Construction Standard Drawings (C-Series), and current revisions. Refer to the 1A sheet for a listing of current revision dates.

2. The project roadway shall be striped by the contractor in accordance with the current edition of the Signing and Marking Standard Drawings (M&S-Series) and the pavement marking plans.

3. For R/W information not shown, see Right-of-Way project No. F 025-2(61) and F 025-2-701.

4. Pavement lift thickness is nominal.

5. Where only the horizontal location of an existing utility is shown, the location is approximate. Where both the horizontal and vertical location of an existing utility is shown, the location has been verified by field survey methods. The contractor shall comply with all Blue Stake laws and Section 107.15 of the Specifications.

6. Delineators, object markers and mile post markers shall be removed and reset as required.

7. The average project elevation is 4480 feet.

8. Slope rounding shall be applied per Std C-02 series unless otherwise noted.

9. New ADOT Right of Way and easements are not required. New County Right of Way for Bramble Drive is not required. New Right of Way for San Francisco Street has been acquired by Yavapai County.

10. Existing Survey Monuments must not be disturbed.

11. The Yavapai County Engineer (928-771-3183) shall be contacted at least two (2) working days in advance to provide the field survey work for crossout staking necessary at each monument location designated on the plans, for the Contractor's use to provide concrete monuments and reference markers. The Yavapai County Engineer will provide approved brass caps for the concrete monuments and also be responsible to stamp the appropriate information on the brass caps and lettering for the reference markers upon the Contractor's completion of the monument and reference marker installation.

12. Construction requirements for survey monuments and reference markers shall be in accordance with ADOT Std Drawing C-21.10 (with modifications as shown on R/W Marker Detail Sheet in these plans) and Section 911-3 of ADOT Standard Specifications 2000.

13. Right of Way Markers shall be placed at locations as shown on project plans.

	NAME	DATE
DESIGN	G. CHILD	04/05
DRAWN	M. GUILLEN	04/05
CHECKED	G. POTTER	04/05

SUNRISE ENGINEERING
www.sunrise-eng.com
2152 SOUTH VINEYARD
SUITE 123
MESA, ARIZONA 85210
TEL 480.768.8600
FAX 480.768.8609

ARIZONA DEPARTMENT OF TRANSPORTATION
INTERMODAL TRANSPORTATION DIVISION
ROADWAY DESIGN SERVICES

DESIGN SHEET

Registered Professional Engineer (Civil)
CERTIFICATE NO. 41184
GEOFFREY S. CHILD
Date Signed 10/30/05

ROUTE	LOCATION	
SR 89	BRAMBLE INTERSECTION	SHEET 1 OF 2
TRACS NO. H6172 01C	089-B-502	2 OF 30

6/30/2005 p:\adot-01065-sr89\Proposed\RoadwayDesign\h6172_01c ds1.dgn

Click here for SR 89 Index

F.H.W.A. REGION	STATE	PROJECT NO.	SHEET NO.	TOTAL SHEETS	AS BUILT
9	ARIZ.	S-089-B-502	4	30	
		089 YV 338			

STA 24+33.23
END BRAMBLE DR/SAN FRANCISCO ST
CONSTRUCTION

POE 24+38.23
PT 24+18.23
24
PI 23+45.45
PC 22+54.67

STA 1252+51
BEGIN PROJECT S-089-B-502

1260 1265 1270 1275 1280 1285

(1) CURVE DATA
PI Sta 16+61.04
Main Curve
Δ=27°46'26"
D=24°00'01"
R=238.73'
L=115.72'
T=59.02
Ext=7.19
Super=NC
N 1423747.75
E 536883.43

(2) CURVE DATA
PI Sta 23+45.45
Main Curve
Δ=61°52'37"
D=37°49'53"
R=151.45'
L=163.56'
T=90.78'
Ext=25.12
Super=0.04'/ft
N 1423427.06
E 537490.68

TS 1271+13.33
SC 1274+13.33

STA 1281+61
END CONSTRUCTION
FOR BRAMBLE INTERSECTION

CS 1283+16.74
ST 1286+16.74
S16°09'54.5"W

20
S28°11'57"W
S62°09'42"E

STA 1267+06.09 SR 89 =
STA 20+00.00 BRAMBLE DR
N 1423588.38
E 537185.21

STA 16+64
BEGIN BRAMBLE DR/SAN FRANCISCO ST
CONSTRUCTION

PT 17+17.74
PI 16+61.04
PC 16+02.02
POB 15+76.94

PI 1278+67.33

(3) AS-BUILT CURVE DATA
PI Sta 1278+67.33 N 1422564.97 E 536636.48

Total Curve
Δ=12°02'03"
T=754.00'
L=1,503.41'
R+o=5,730.23'
Ext=32.40'

Main Curve
Δ=9°02'03"
D=1°00'00"
R=5,729.58'
L=903.41'
Super=NC

Spiral Curve
Δ=1°30'00"
L=300'
o=0.65'
t=150.00'

Section Corner
NW 35 2.5IN BC IN CONC
STPD T18N R2W
SEC (34, 26, 35) 1916
2421.47 FT LT OF
STA 1264+79.29
N 1422644.02
E 539426.45
ELEV=4478.71

Section Corner
SE27 2.5IN BC ON 2 IN PIPE
STPD T18N R2W
SEC (27, 34, 26) 1916
2110.25 FT LT OF
STA 1258+88.47
N 1423311.78
E 539431.36
ELEV=4503.66'

1315 15 1320 N 00°25'25.9" E 5296.39'

Section Corner
NW2 3.5IN USGLO BC ON
3IN PIPE STPD
T18N R2W SEC (33, 35, 3, 2) 1916
N 1418015.53
E 539392.17
ELEV=4473.66'

(4) AS-BUILT CURVE DATA
PI Sta 1333+06.91 N 1417336.06 E 535120.79
Main Curve
Δ=10°00'49"
D=00°03'00"
R=11,459.16'
L=2,002.75'
T=1,003.93'
Ext=43.89'
Super=NC
CHORD=2,002.20'
CHORD BEARING=S11°09'30"W

S16°09'54.5"W
PC 1323+02.97
1325 1330 1335
5263.67'
S89° 44' 30" E
STA 1325+79.44
S 06°09'5.1" W
PT 1343+05.72

Section Corner
NW3 4.5IN AC STPD
MADDOCK ASSOC.
ENG SEC (33, 34, 3, 2)
N 1418039.26
E 534128.56
ELEV=4385.18'

Section Corner
NW10 1IN PLASTIC CAP
STPD FAMAS RLS 27738
750.49' RT OF POT
STA 1383+03.99
N 1412443.09
E 533838.60
Elev=4362.79'

PI 1333+06.91

REDUCED SIZE
DO NOT SCALE

	NAME	DATE
DESIGN	G. CHILD	04/05
DRAWN	M. GUILLEN	04/05
CHECKED	G. POTTER	04/05

SUNRISE ENGINEERING
www.sunrise-eng.com
8250 SOUTH VINEYARD SUITE 101 MESA, ARIZONA 85210 TEL 480.768.8600 FAX 480.768.8609

ARIZONA DEPARTMENT OF TRANSPORTATION
INTERMODAL TRANSPORTATION DIVISION
ROADWAY DESIGN SERVICES

GEOMETRIC SHEET

ROUTE: SR 89
LOCATION: BRAMBLE INTERSECTION

Registered Professional Engineer (Civil) CERTIFICATE NO. 41184 GEOFFREY S. CHILD

SHEET 1 OF 1

TRACS NO. H6172 01C | 089-B-502 | 4 OF 30

6/30/2005 p:\adot-01065-sr-89\Proposed\RoadwayDesign\h6172_01c g02 A.dgn

Click here for SR 89 Index

F.H.W.A. REGION	STATE	PROJECT NO.	SHEET NO.	TOTAL SHEETS	AS BUILT
9	ARIZ.	S-089-B-502	6	30	
		089 YV 338			

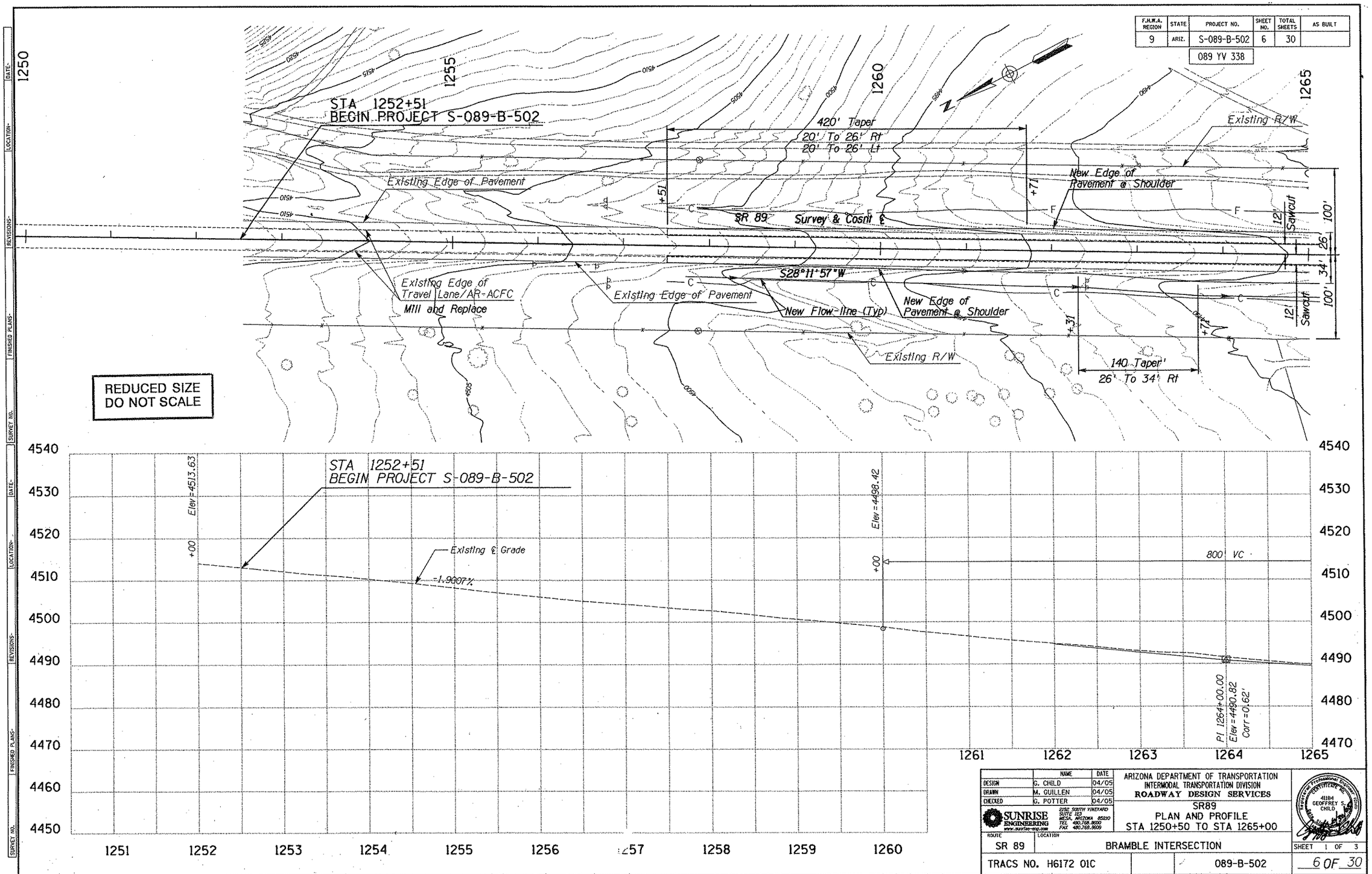

	NAME	DATE
DESIGN	G. CHILD	04/05
DRAWN	M. GUILLEN	04/05
CHECKED	G. POTTER	04/05

SUNRISE ENGINEERING
2152 SOUTH VINEYARD SUITE 123
MESA, ARIZONA 85210
TEL 480.768.8000
FAX 480.768.8009
www.sunrise-eng.com

ARIZONA DEPARTMENT OF TRANSPORTATION
INTERMODAL TRANSPORTATION DIVISION
ROADWAY DESIGN SERVICES

SR89
PLAN AND PROFILE
STA 1250+50 TO STA 1265+00

Registered Professional Engineer (Civil) CERTIFICATE NO. 41184 GEOFFREY S. CHILD

ROUTE: SR 89
LOCATION: BRAMBLE INTERSECTION

SHEET 1 OF 3

TRACS NO. H6172 01C

089-B-502

6 OF 30

6/30/2005 p:\adot-01065-sr89\Proposed\RoadwayDesign\h6172_01c p01.dgn

Click here for SR 89 Index

F.H.W.A. REGION	STATE	PROJECT NO.	SHEET NO.	TOTAL SHEETS	AS BUILT
9	ARIZ.	S-089-B-502	8	30	

089 YV 338

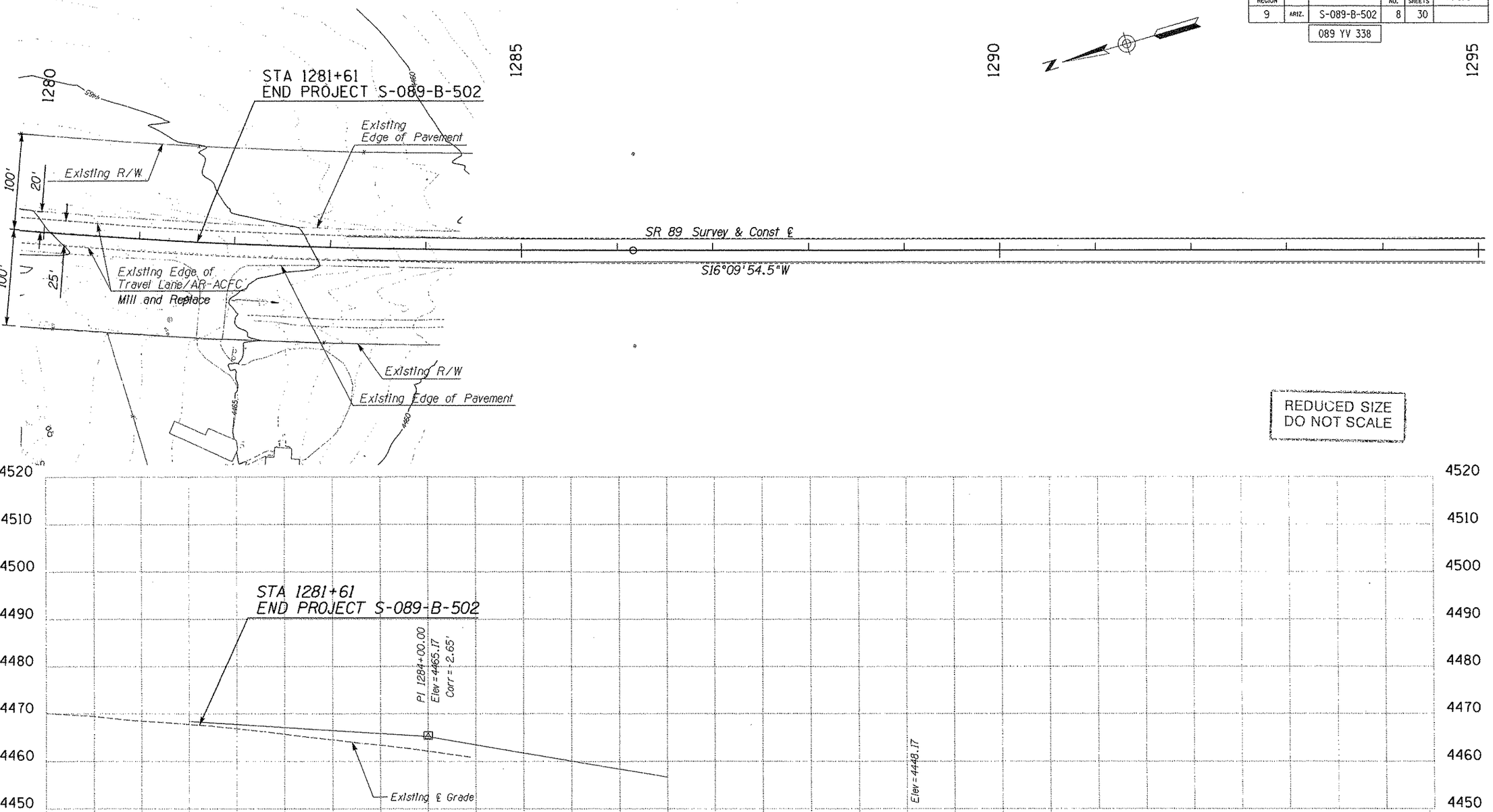

	NAME	DATE
DESIGN	G. CHILD	04/05
DRAWN	M. GUILLEN	04/05
CHECKED	G. POTTER	04/05

SUNRISE ENGINEERING
www.sunrise-eng.com
6150 SOUTH VINEYARD SUITE 103
MESA, ARIZONA 85210
TEL 480.705.8600
FAX 480.705.8609

ARIZONA DEPARTMENT OF TRANSPORTATION
INTERMODAL TRANSPORTATION DIVISION
ROADWAY DESIGN SERVICES

SR89
PLAN AND PROFILE
STA 1280+00 TO 1295+00

Registered Professional Engineer (Civil) CERTIFICATE NO. 41184 GEOFFREY S. CHILD

ROUTE: SR 89
LOCATION: BRAMBLE INTERSECTION

SHEET 3 OF 3

TRACS NO. H6172 01C | 089-B-502 | 8 OF 30

6/30/2005 p:\adot-01065-sr89\Proposed\RoadwayDesign\h6172_01c p04.dgn

Click here for SR 89 Index

F.H.W.A. REGION	STATE	PROJECT NO.	SHEET NO.	TOTAL SHEETS	AS BUILT
9	ARIZ.	S-089-B-502	10	30	
		089 YV 338			

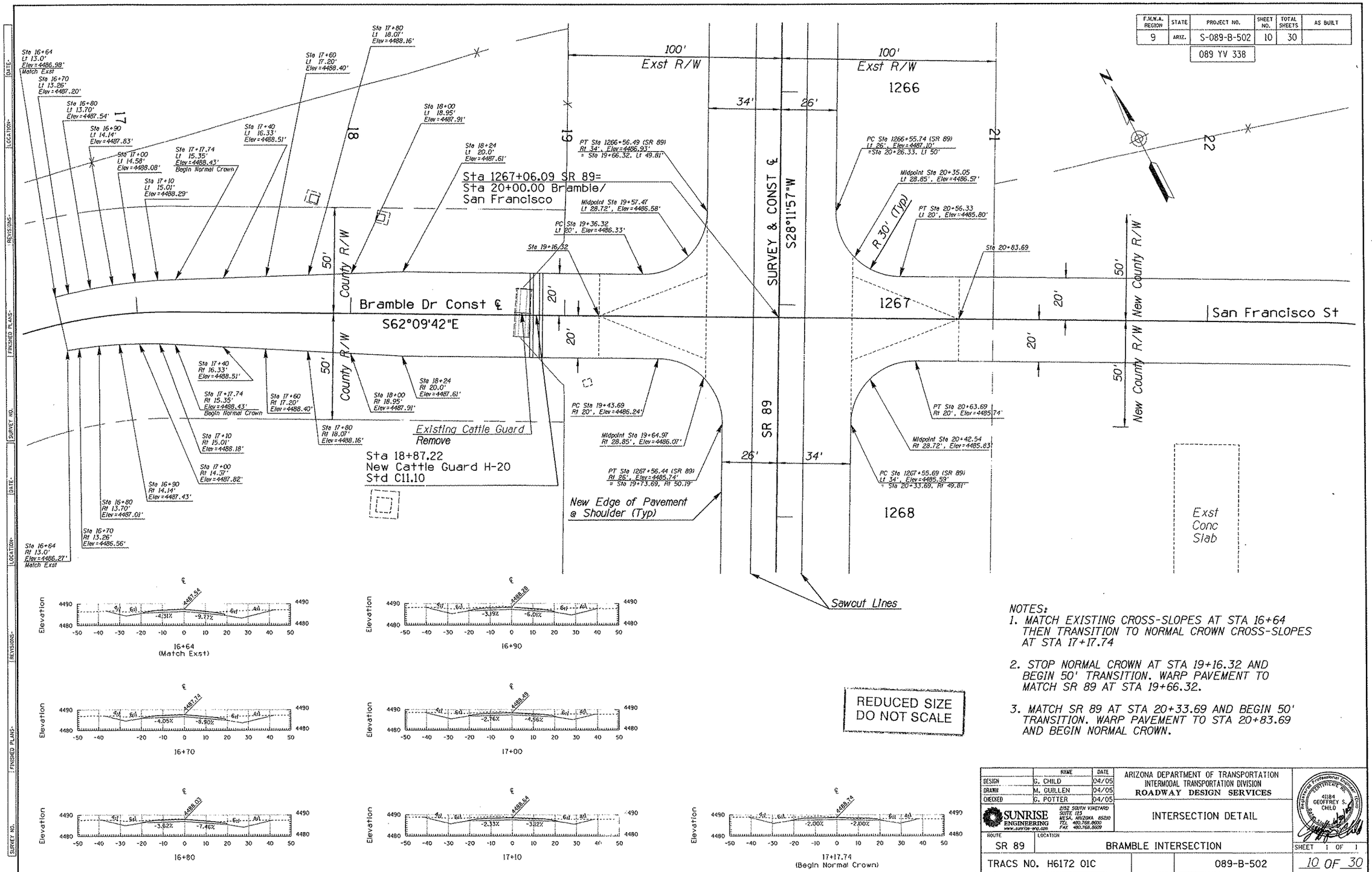

NOTES:

1. MATCH EXISTING CROSS-SLOPES AT STA 16+64 THEN TRANSITION TO NORMAL CROWN CROSS-SLOPES AT STA 17+17.74
2. STOP NORMAL CROWN AT STA 19+16.32 AND BEGIN 50' TRANSITION. WARP PAVEMENT TO MATCH SR 89 AT STA 19+66.32.
3. MATCH SR 89 AT STA 20+33.69 AND BEGIN 50' TRANSITION. WARP PAVEMENT TO STA 20+83.69 AND BEGIN NORMAL CROWN.

	NAME	DATE
DESIGN	G. CHILD	04/05
DRAWN	M. GUILLEN	04/05
CHECKED	G. POTTER	04/05

SUNRISE ENGINEERING
2152 SOUTH VINEYARD SUITE 123
MESA, ARIZONA 85210
TEL 480.768.0600
FAX 480.768.0609
www.sunrise-eng.com

ARIZONA DEPARTMENT OF TRANSPORTATION
INTERMODAL TRANSPORTATION DIVISION
ROADWAY DESIGN SERVICES

INTERSECTION DETAIL

Registered Professional Engineer (Civil) CERTIFICATE NO. 41184 GEOFFREY S. CHILD

ROUTE: SR 89
LOCATION: BRAMBLE INTERSECTION

SHEET 1 OF 1

TRACS NO. H6172 01C | 089-B-502 | 10 OF 30

6/30/2005 p:\adot-01065-sr89\Proposed\RoadwayDesign\h6172_01c g01.dgn

Click here for SR 89 Index

F.H.W.A. REGION	STATE	PROJECT NO.	SHEET NO.	TOTAL SHEETS	AS BUILT
9	ARIZ.	S-089-B-502	12	30	
		089 YV 338			

PAVEMENT MARKING AND SIGNING NOTES:

1. IT IS THE CONTRACTOR'S RESPONSIBILITY TO ENSURE THAT THE FINAL SURFACE COURSE IS PLACED SO THAT THE STRIPING IS OFFSET ONE FOOT CLEAR OF THE CONSTRUCTION JOINT, UNLESS OTHERWISE DIRECTED BY THE ENGINEER.

2. THE CONTRACTOR SHALL BE RESPONSIBLE FOR THE LAYOUT AND INSTALLATION OF PERMANENT PAVEMENT MARKINGS ON THE FINAL SURFACE COURSE FOLLOWING CONTROL POINTS THAT HAVE BEEN SET NO MORE THAN 50 FEET APART ALONG THE LINES TO BE STRIPED.

3. WHEN MORE THAN ONE COURSE OF NEW ASPHALT PAVEMENT IS TO BE PLACED, THE INTERIM SURFACE SHOULD BE MARKED FOR CENTERLINES AND LANE LINES WITH A THIN APPLICATION (10 MILS WET, 5 MILS DRY) OF STANDARD REFLECTORIZED TRAFFIC PAINT. THE BROKEN LINE SHALL 4 FEET LONG, SEPARATED BY SPACES OF 36 FEET, AND THE SOLID LINES SHALL BE SOLID. RECOGNIZING THAT IT IS NOT ALWAYS PRACTICAL TO DO THIS, IT IS ACCEPTABLE TO UTILIZE TEMPORARY PAVEMENT MARKER (CHIP SEAL MARKERS) PER ADOT STANDARD DRAWINGS, TO SIMULATE CENTERLINE AND LANE LINE MARKINGS FOR A DURATION UNTIL THE FINISHED SURFACE IS PLACED AND PAINT STRIPING IS APPLIED IN THE PERMANENT LOCATIONS. IN THE LATTER CASE, SIGNS SHALL BE POSTED AT EACH END OF THE PROJECT INDICATING THAT THERE ARE "NO PAVEMENT MARKINGS NEXT _____ MILES".

4. WHEN STRIPE OBLITERATION IS NECESSARY, IT SHALL BE ACCOMPLISHED BY APPROVED METHODS, AS INDICATED IN THE SPECIAL PROVISIONS. PAINTING OVER STRIPING, REMOVAL OF PAVEMENT, AND OVERLAYING PAVEMENT DO NOT CONSTITUTE STRIPE OBLITERATION.

5. THE CONTRACTOR SHALL PRESERVE ALL ROADWAY SIGNS, SIGN SUPPORTS, OBJECT MARKERS, AND MILEPOST MARKERS. THE CONTRACTOR SHALL REPLACE ANY SIGNS, SIGN SUPPORTS, AND MARKERS DAMAGED AS A RESULT OF THE CONSTRUCTION AT THE CONTRACTOR'S EXPENSE.

6. THE CONTRACTOR SHALL REPLACE ALL DELINEATORS WITH NEW FLEXIBLE DELINEATORS AT THEIR CURRENT STATIONS. IN ADDITION, THE CONTRACTOR SHALL INSTALL DELINEATORS IN ACCORDANCE WITH ADOT STD. DWGS., AND AS DIRECTED BY THE ENGINEER. ALL FLEXIBLE DELINEATORS SHALL BE ON ADOT'S APPROVED PRODUCTS LIST.

7. IF CHIP SEAL MARKERS ARE USED PER NOTE #3, THE CONTRACTOR SHALL OFFSET THE CHIP SEAL MARKERS OR REMOVE THE MARKERS IMMEDIATELY PRIOR TO APPLYING THE FINAL STRIPING SO THAT THE MARKERS WILL NOT INTERFERE WITH THE APPLICATION OF EPOXY PAVEMENT MARKERS.

8. THE FINAL STRIPING SHALL BE A TWO-PART EPOXY PAVEMENT MARKING MATERIAL PLACED BETWEEN 7 AND 14 DAYS AFTER THE COMPLETION OF THE FINAL PAVEMENT SURFACE, AS DIRECTED BY THE ENGINEER. THE TWO-PART MATERIAL SHALL CONFORM TO SECTION 709 OF THE ADOT STANDARD SPECIFICATIONS.

9. ALL FINAL STOP BARS, PAVEMENT ARROWS, "ONLY" LEGENDS AND "STOP" LEGENDS, SHALL BE INSTALLED IN ACCORDANCE WITH ADOT SIGNING & MARKING STD DWGS.

10. ALL FINAL STOP BARS SHALL BE A TWO-PART EPOXY PAVEMENT MARKING MATERIAL (SEE NOTE NO. 8 ABOVE). ALL PAVEMENT ARROWS AND "ONLY" LEGENDS SHALL BE PREFORMED TYPE I MARKING TAPE AND SHALL CONFORM TO SECTION 705 OF THE ADOT STANDARD SPECIFICATIONS.

11. THE CONTRACTOR SHALL CLEAN THE ROADWAY SURFACE TO THE SATISFACTION OF THE ENGINEER, BY SWEEPING AND AIR-JET BLOWING, IMMEDIATELY PRIOR TO THE PLACEMENT OF ALL PAVEMENT MARKINGS. THE ROADWAY SURFACE SHALL BE DRY. THE PAVEMENT TEMPERATURE SHALL NOT BE LESS THAN 40°F AND THE AIR TEMPERATURE SHALL NOT BE LESS THAN 35°F FOR THE PLACEMENT OF EPOXY PAVEMENT MARKINGS. THE ROADWAY SURFACE SHALL BE DRY AND THE AIR AND PAVEMENT TEMPERATURES SHALL NOT BE LESS THAN 60°F FOR THE INSTALLATION OF TYPE I PAVEMENT MARKING TAPE.

12. ALL EXISTING PAVEMENT MARKINGS IN CONFLICT WITH THE TRAFFIC CONTROL PLANS SHALL BE REMOVED BY APPROVED METHODS, AS INDICATED IN THE SPOECIAL PROVISIONS.

13. TEMPORARY PAVEMENT MARKINGS SHALL BE REMOVED WHEN NO LONGER REQUIRED.

14. THE CONTRACTOR SHALL NOTIFY THE ENGINEER AND THE STATE'S "NO-PASSING ZONE" CREW, TWO WEEKS PRIOR TO THE APPLICATION OF THE FINAL SURFACE COURSE TO SCHEDULE A, "NO-PASSING ZONE", SURVEY BY STATE FORCES. THE "NO-PASSING ZONE" SURVEY SHALL SUPERSEDE THE PERMANENT PAVEMENT MARKING PLANS. STATE "NO-PASSING ZONE CREW PHONE NUMBERS: BOB WAGONER (602) 228-2508, JIM WOJCIK (602) 228-0889 AND REX HEWARD (602) 228-4932.

15. THE CONTRACTOR SHALL BREAK THE CENTER LINES AND EDGE LINES ADJACENT TO TURNOUTS ACROSS ANY INTERSECTIONS WITH DEDICATED ROADWAY, OR AS OTHERWISE DIRECTED BY THE ENGINEER. IN ADDITION, THE CONTRACTOR SHALL NOT PLACE ANY CENTER LINES WITHIN 10 FEET OF THE NEAREST EDGE OF PAVEMENT OF THE INTERSECTING ROADWAY.

16. THE PAVEMENT MARKING DRAWINGS ARE SCHEMATIC ONLY AND NOT TO SCALE. THE CONTRACTOR SHALL FOLLOW ALL DIMENSIONS AND DETAILS WHEN INSTALLING PAVEMENT MARKINGS.

17. ALL SIGNS SHALL BE IN COMPLIANCE WITH THE MANUAL ON UNIFORM TRAFFIC CONTROL DEVICES (MUTCD), ADOT SIGNING AND MARKING STANDARD DRAWINGS, ADOT TRAFFIC ENGINEERING MANUAL OF APPROVED SIGNS, THESE PLANS, AND THE SPECIAL PROVISIONS.

18. SIGNING MAY BE MODIFIED AS DIRECTED BY THE ENGINEER.

19. POST LENGTHS INDICATED ON SIGN SUMMARY SHEETS ARE APPROXIMATE. THE CONTRACTOR SHALL VERIFY ACTUAL POST LENGTHS.

20. ALL FACE OF BOLTS USED FOR MOUNTING SIGNS SHALL BE PAINTED THE SAME COLOR AS THE SIGN PANEL.

21. ALL STATION LOCATIONS ARE APPROXIMATE. THE CONTRACTOR SHALL VERIFY ACTUAL SIGN LOCATIONS WITH THE ENGINEER PRIOR TO THE INSTALLATION OF ALL SIGNS.

22. NORMAL MOUNTING HEIGHT AND OFFSET SHALL BE AS SHOWN ON ADOT STANDARD DRAWING S-3.

23. NORMAL OFFSET FOR ALL SIGNS IS 12 FEET FROM NEAR EDGE OF THE SIGN TO THE EDGE OF SHOULDER UNLESS OTHERWISE NOTED ON THE SUMMARY SHEET, ON THE PLANS, OR AS DIRECTED BY THE ENGINEER.

24. ALL SIGNS SHALL BE MADE OF FLAT SHEET ALUMINUM PANEL WITH REFLECTIVE SHEETING AND DIRECT APPLIED CHARACTERS PER SECTION 608-2.07 AND 608-2.09 OF THE STANDARD SPECIFICATIONS.

25. LOCATIONS FOR NO PASSING ZONES AS SHOWN IN THE PLANS ARE APPROXIMATE AND WILL BE MODIFIED AFTER A NO PASSING ZONE SURVEY HAS BEEN COMPLETED.

26. ALL DELINEATORS AND OBJECT MARKERS THAT ARE REMOVED SHALL BE RESET (PER STD DWGS) AS REQUIRED.

REDUCED SIZE DO NOT SCALE

APPROXIMATE QUANTITIES

DESCRIPTION		UNITS	TOTAL QUANTITIES	4" Equivalent
ITEM # 7050019 PREFORMED, TYPE I, LEGEND	LEGENDS	EACH	6	-
ITEM # 7050023 PREFORMED, TYPE I, WHITE	SINGLE ARROWS	EACH	18	-
ITEM # 7050024 PREFORMED, TYPE I, WHITE	DOUBLE ARROWS	EACH	4	-
ITEM # 7090001 DUAL COMPONENT (WHITE EPOXY)	6" WHITE *	L. FT.	5,500	8,250
ITEM # 7090001 DUAL COMPONENT (WHITE EPOXY)	6" WHITE MINI SKIP *	L. FT.	100	150
ITEM # 7090001 DUAL COMPONENT (WHITE EPOXY)	12" WHITE *	L. FT.	1,500	4,500
ITEM # 7090001 DUAL COMPONENT (WHITE EPOXY)	18" WHITE STOP BAR *	L. FT.	55	250
ITEM # 7090002 DUAL COMPONENT (YELLOW EPOXY)	6" YELLOW *	L. FT.	9,700	14,550

* QUANTITY PAID BY 4" EQUIVALENT

SYMBOL LEGEND:

	NEW SIGN ON EMBEDDED POST(S)
	EXST SIGN ON EMBEDDED POST(S)
⇨	DIRECTION OF TRAVEL

	NAME	DATE
DESIGN	C. CHILD	04/05
DRAWN	M. GUILLEN	04/05
CHECKED	C. POTTER	04/05

SUNRISE ENGINEERING
2152 SOUTH VINEYARD SUITE 123 MESA, ARIZONA 85210
TEL 480.768.6600 FAX 480.768.6609
www.sunrise-eng.com

ARIZONA DEPARTMENT OF TRANSPORTATION
INTERMODAL TRANSPORTATION DIVISION
ROADWAY DESIGN SERVICES

PAVEMENT MARKING
SIGNING AND STRIPING
NOTES / QUANTITIES

ROUTE: SR 89 | LOCATION: BRAMBLE INTERSECTION

TRACS NO. H6172 01C | 089-B-502

SHEET 1 OF 1

12 OF 30

6/30/2005 p:\adot-01065-sr89\Proposed\RoadwayDesign\t6172_01c p01.dgn

Click here for SR 89 Index

F.H.W.A. REGION	STATE	PROJECT NO.	SHEET NO.	TOTAL SHEETS	AS BUILT
9	ARIZ.	S-089-B-502	14	30	
		089 YV 338			

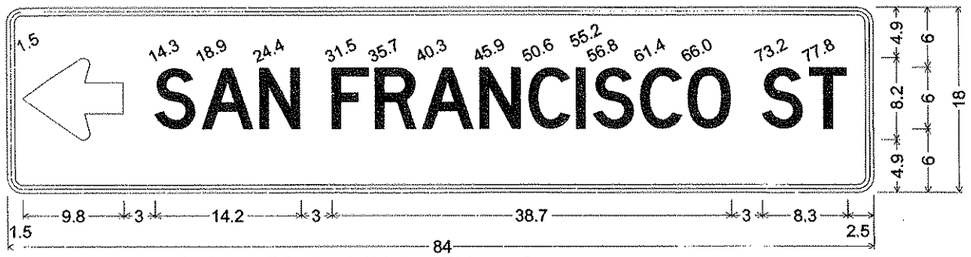

Sta 1262+40 Rt; 1.5" Radius, 0.4" Border, 0.4" Indent, White on Green;
Standard Arrow Custom 9.8" X 8.1" 180°; [SAN FRANCISCO ST] D 50% spacing;

SR-89
Sta 1262+40 Rt

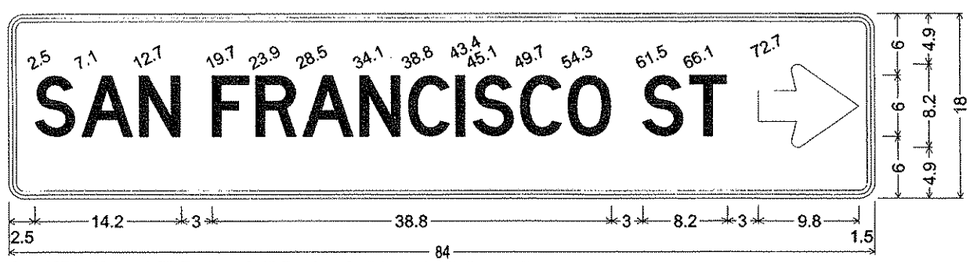

Sta 1271+48 Lt; 1.5" Radius, 0.4" Border, 0.4" Indent, White on Green;
[SAN FRANCISCO ST] D 50% spacing; Standard Arrow Custom 9.8" X 8.1" 0°;

SR-89
Sta 1271+48 Lt

NOTE:
1. LEGENDS AND BORDERS ARE WHITE ON A GREEN BACKGROUND.

2. MEASUREMENTS OF SIGN DETAILS DIMENSIONED IN INCHES.

NEW SIGN FORMAT DETAILS
NOT TO SCALE

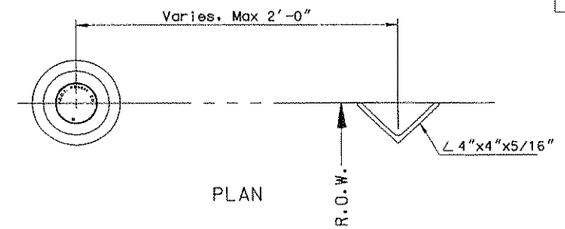

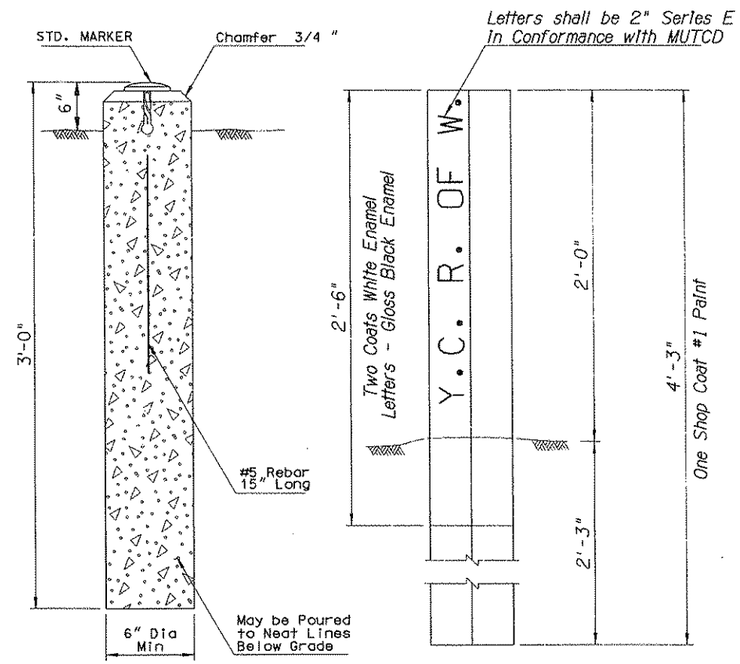

RIGHT OF WAY MARKER DETAIL (STD DRAWING C-21.10 MODIFIED)
NOT TO SCALE

NOTE:
SEE R/W NOTES UNDER "GENERAL NOTES" ON DESIGN SHEET (SHEET 2).

REDUCED SIZE
DO NOT SCALE

	NAME	DATE
DESIGN	C. CHILD	04/05
DRAWN	M. GUILLEN	04/05
CHECKED	C. POTTER	04/05

SUNRISE ENGINEERING
2152 SOUTH VINEYARD SUITE 123
MESA, ARIZONA 85210
TEL 480.768.0600
FAX 480.768.0609
www.sunrise-eng.com

ARIZONA DEPARTMENT OF TRANSPORTATION
INTERMODAL TRANSPORTATION DIVISION
ROADWAY DESIGN SERVICES

SIGN FORMAT & R/W MARKER DETAIL SHEET

ROUTE: SR 89
LOCATION: BRAMBLE INTERSECTION

Registered Professional Engineer (Civil) CERTIFICATE NO. 41184 GEOFFREY S. CHILD

SHEET 1 OF 1

TRACS NO. H6172 01C | 089-B-502 | 14 OF 30

6/30/2005 p:\adot-01065-sr89\Proposed\RoadwayDesign\t6172_01c p02a.dgn

Click here for SR 89 Index

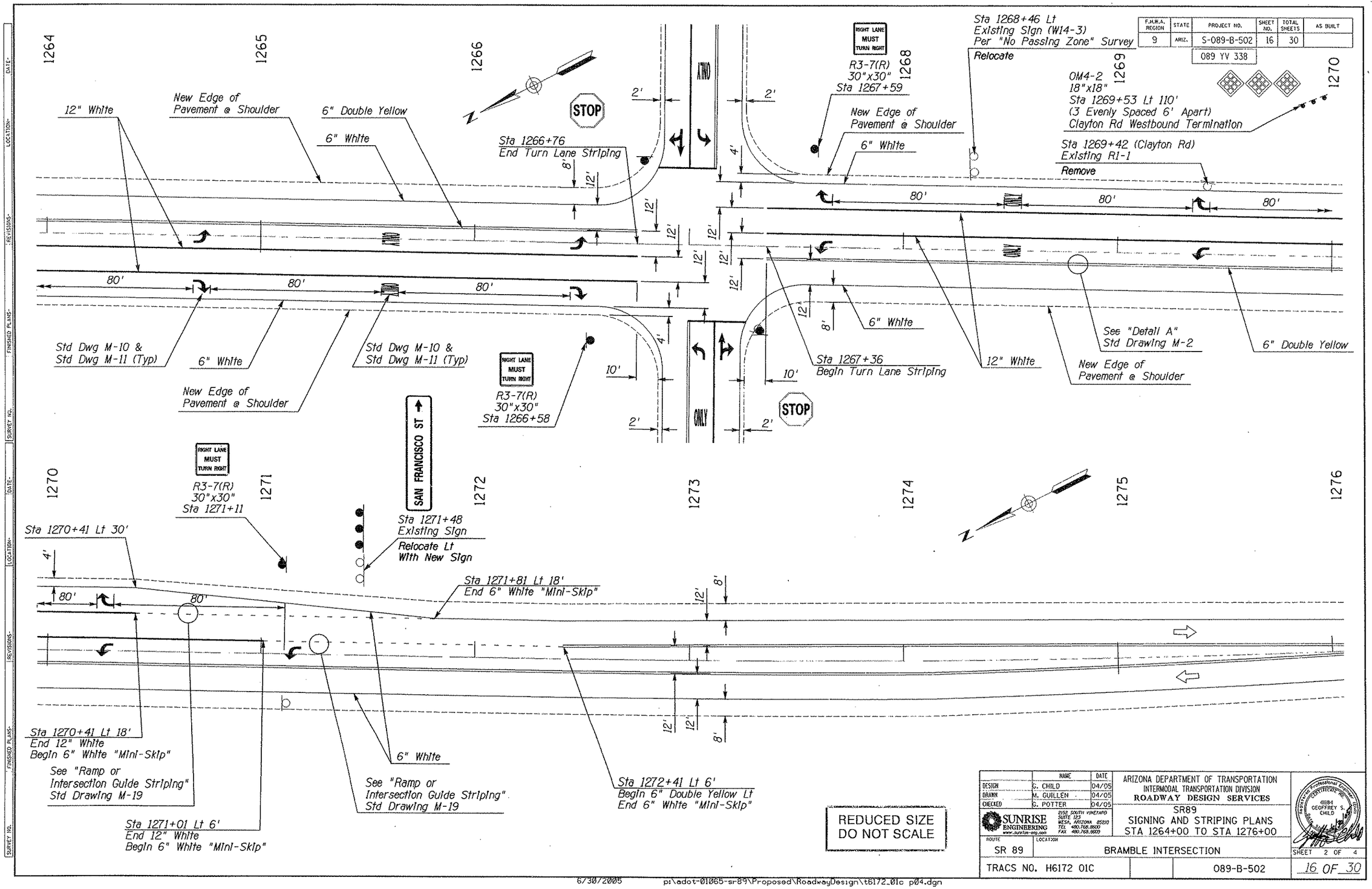

F.H.W.A. REGION	STATE	PROJECT NO.	SHEET NO.	TOTAL SHEETS	AS BUILT
9	ARIZ.	S-089-B-502	16	30	
		089 YV 338			

	NAME	DATE
DESIGN	G. CHILD	04/05
DRAWN	M. GUILLEN	04/05
CHECKED	G. POTTER	04/05

SUNRISE ENGINEERING
2152 SOUTH VINEYARD SUITE 103
MESA, ARIZONA 85210
TEL 480.768.8500
FAX 480.768.8520
www.sunrise-eng.com

ARIZONA DEPARTMENT OF TRANSPORTATION
INTERMODAL TRANSPORTATION DIVISION
ROADWAY DESIGN SERVICES

SR89
SIGNING AND STRIPING PLANS
STA 1264+00 TO STA 1276+00

REGISTERED PROFESSIONAL ENGINEER CERTIFICATE NO. 41184 GEOFFREY S. CHILD

ROUTE	LOCATION	
SR 89	BRAMBLE INTERSECTION	SHEET 2 OF 4
TRACS NO. H6172 01C	089-B-502	16 OF 30

6/30/2005 p:\adot-01065-sr89\Proposed\RoadwayDesign\t6172_01c p04.dgn

Click here for SR 89 Index

F.H.W.A. REGION	STATE	PROJECT NO.	SHEET NO.	TOTAL SHEETS	AS BUILT
9	ARIZ.	S-089-B-502	18	30	
		089 YV 338			

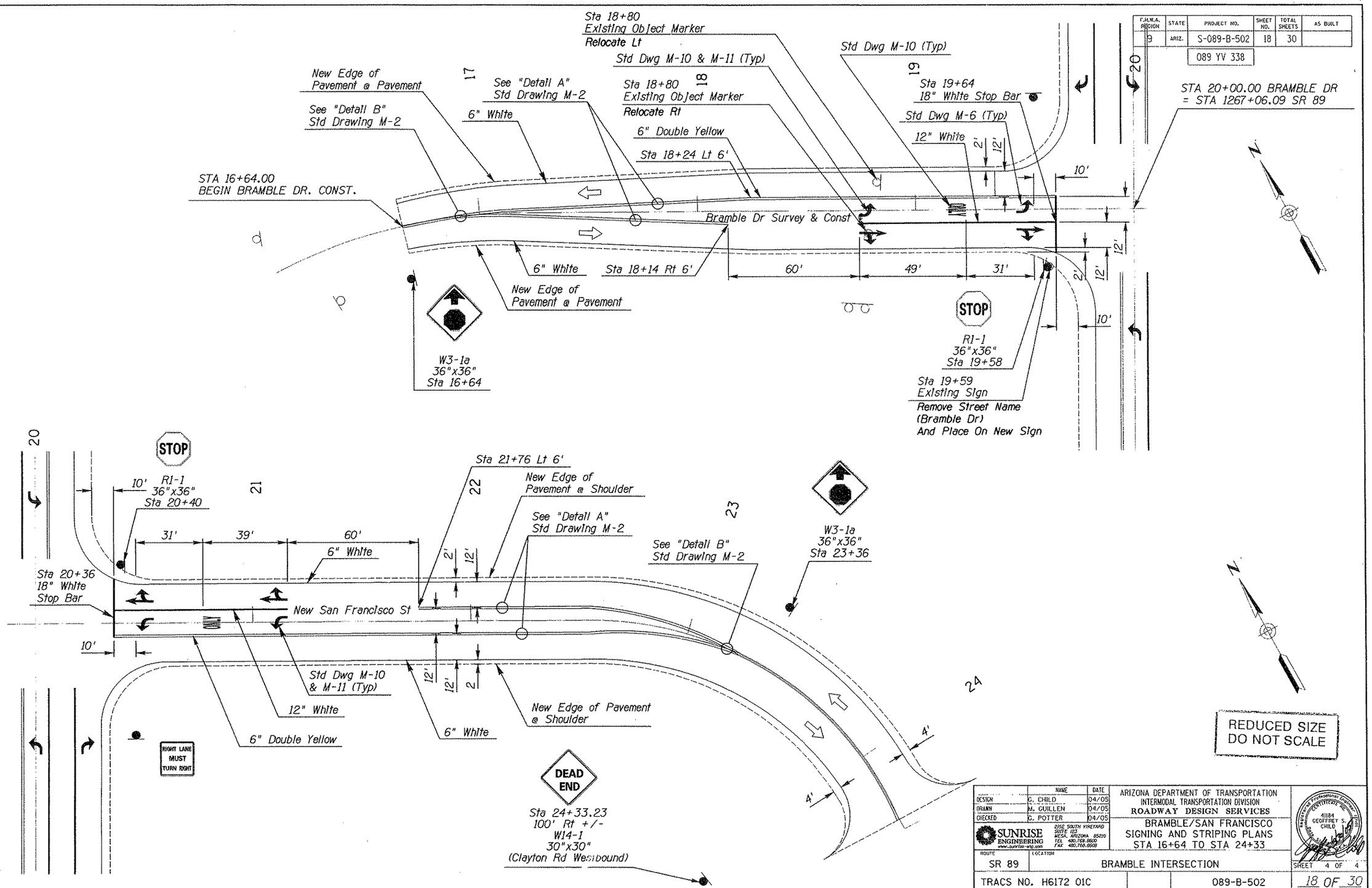

	NAME	DATE
DESIGN	C. CHILD	04/05
DRAWN	M. GUILLEN	04/05
CHECKED	C. POTTER	04/05

SUNRISE ENGINEERING
2152 SOUTH VINEYARD
SUITE 103
MESA, ARIZONA 85210
TEL 480.768.8600
FAX 480.768.8609
www.sunrise-eng.com

ARIZONA DEPARTMENT OF TRANSPORTATION
INTERMODAL TRANSPORTATION DIVISION
ROADWAY DESIGN SERVICES

BRAMBLE/SAN FRANCISCO
SIGNING AND STRIPING PLANS
STA 16+64 TO STA 24+33

Registered Professional Engineer (Civil)
CERTIFICATE NO. 41184
GEOFFREY S. CHILD
Expires 12/31/06

ROUTE: SR 89
LOCATION: BRAMBLE INTERSECTION
SHEET 4 OF 4

TRACS NO. H6172 01C | 089-B-502 | 18 OF 30

6/30/2005 p:\adot-01065-sr89\Proposed\RoadwayDesign\t6172_01c p06.dgn

F.H.W.A. REGION	STATE	PROJECT NO.	SHEET NO.	TOTAL SHEETS	AS BUILT
9	ARIZ.	S-089-B-502	20	30	
		089 YV 338			

Click here for SR 89 Index

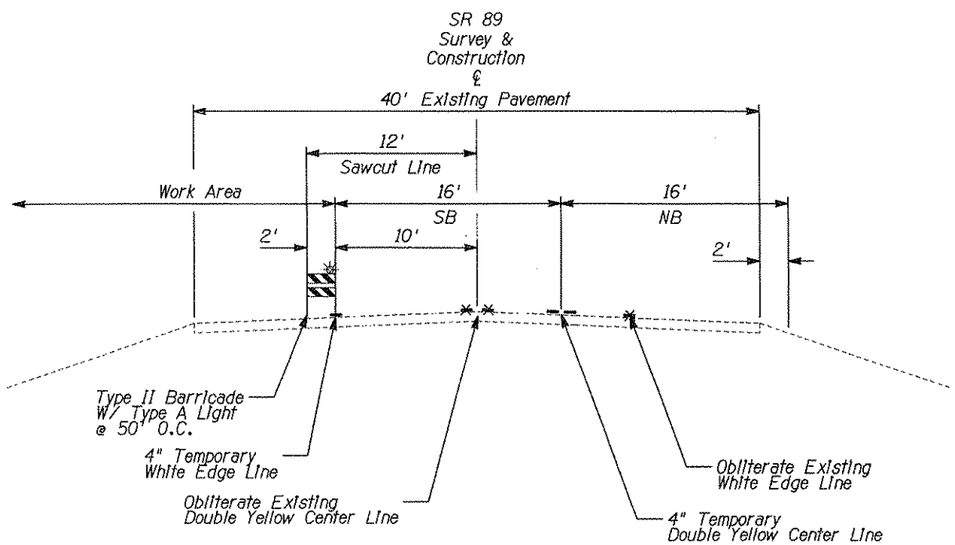

PHASE I CONSTRUCTION

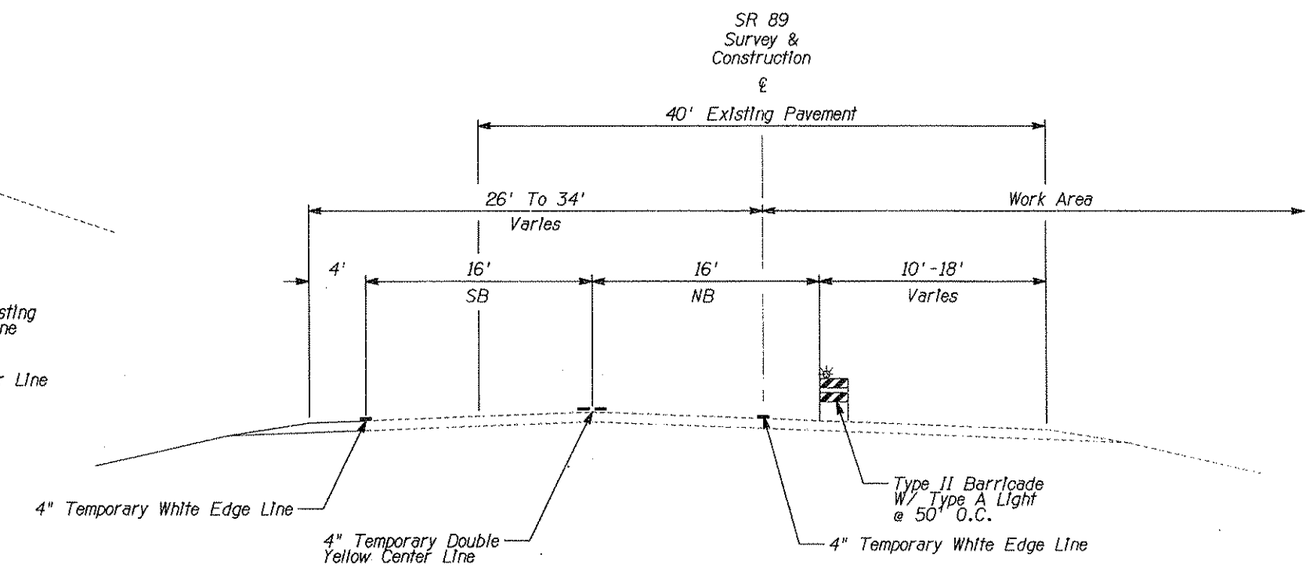

PHASE II CONSTRUCTION

NOTES:

1. INSTALL "ROAD WORK AHEAD" SIGNS ON ALL SIDE ROADS / HIGH VOLUME PUBLIC DRIVEWAYS.
2. THESE SHEETS ARE A SCHEMATIC OF THE MINIMUM TRAFFIC CONTROL SIGNING REQUIREMENTS ONLY. THE CONTRACTOR SHALL SUBMIT TRAFFIC CONTROL PLANS, TO BE APPROVED BY THE ADOT RESIDENT ENGINEER, PRIOR TO THE START OF ANY WORK. THESE PLANS SHALL INCLUDE CHANNELIZING DEVICES, TAPER LENGTHS AND LOCATIONS AND ANY OTHER INFORMATION AS REQUESTED BY THE ENGINEER.
3. OBLITERATE EXISTING STRIPING & PAVEMENT MARKING AS NECESSARY.
4. MINIMUM TAPER LENGTHS ADDED TO EACH END OF THE PROJECT IN ORDER TO SHIFT TRAFFIC DURING CONSTRUCTION SHALL BE AS DEFINED IN MUTCD PART VI.

REDUCED SIZE
DO NOT SCALE

	NAME	DATE
DESIGN	G. CHILD	04/05
DRAWN	M. GUILLEN	04/05
CHECKED	C. POTTER	04/05

SUNRISE ENGINEERING
2152 SOUTH VINEYARD
SUITE 123
MESA, ARIZONA 85210
TEL 480.768.8500
FAX 480.768.8509
www.sunrise-eng.com

ARIZONA DEPARTMENT OF TRANSPORTATION
INTERMODAL TRANSPORTATION DIVISION
ROADWAY DESIGN SERVICES

PHASE CONSTRUCTION SEQUENCE
AND TRAFFIC CONTROL
SR 89

Registered Professional Engineer (Civil)
CERTIFICATE NO. 41184
GEOFFREY S. CHILD
Date Signed 4/14/05

ROUTE	LOCATION	
SR 89	BRAMBLE INTERSECTION	SHEET 2 OF 3
TRACS NO. H6172 01C	089-B-502	20 OF 30

6/30/2005 p:\adot-01065-sr89\Proposed\RoadwayDesign\h6172_01c t02.dgn

Click here for SR 89 Index

F.H.W.A. REGION	STATE	PROJECT NO.	SHEET NO.	TOTAL SHEETS	AS BUILT
9	ARIZ.	S-089-B-502	22	30	

089 YV 338

PART 1 - To be completed by the Landscape Architect or Design Engineer

I. PROJECT DESCRIPTION

A. Owner Name and Address:

Arizona Department of Transportation
205 South 17th Avenue
Phoenix, Arizona 85007-3213

Yavapai County Public Works
1100 Commerce Drive
Prescott, Arizona 86305

B. Project TRACS Number: H6172 01C

C. Project Location: SR 89 and Bramble Drive
City: Paulden County: Yavapai
Beginning Latitude (NAD 83): 34° 54' 38"
Beginning Longitude (NAD 83): 112° 27' 37"

D. Project Description: Widen SR 89 at Bramble Drive by Constructing Center Turning Lanes (For Left Turns) and Right Turning Lanes. Eliminate Clayton Road Access to SR89 and Extend San Francisco Street to SR 89 and Bramble Drive to form a New 4-Way Intersection.

II. HYDROLOGIC INFORMATION

A. Project Size:
Length (Mi.) 0.55
Area (Ac.) 5.70 +/-

B. Area to be Graded (Ac.): 4.90 +/-

C. Runoff Coefficient:
Existing 0.47
Developed 0.52

D. Receiving Water(s): Big Chino Wash

III. PRESERVATION OF EXISTING VEGETATION

A. In accordance with the specifications, existing vegetation will be preserved. Clearing limits shall be confined to areas that require grading. Existing vegetation outside the boundaries of the cleared area shall be protected from damage by construction activities. Existing trees within the area to be cleared shall be preserved and protected, wherever possible.

IV. SOIL STABILIZATION MEASURES

A. All disturbed soil, which will not be paved, riprapped or otherwise covered to prevent erosion, will be revegetated and/or landscaped in accordance with the project plans and specifications.

B. Scheduling of the revegatation effort can be found on PART 2 of this sheet under SCHEDULE OF MAJOR ACTIVITIES.

V. MEASURES TO CONTROL EROSION AND SEDIMENT

A. Temporary Erosion and Sediment Controls:
(Refer to the Following SWPPP Site Plan and Specifications)

___ Erosion Control Mattings
___ Temporary Diversion Dikes
___ Check Dams
___ Rock Inlet/Outlet Protection
___ Sediment Control Berms
___ Silt Fences
___ Wattles (Excelsior/Straw)
X Excelsior Logs / Sediment Logs
X Seeding (Class II with mulch)
___ Others Describe:

B. Permanent Erosion and Sediment Controls:
(Refer to Project Plans SWPPP Site Plan and Specifications)

___ Crown Ditch/Dike
___ Rock Protection
___ Rock Riprap Channel Lining
___ Sediment Basin
___ Embankment Curb
___ Spillways and Downdrains
___ Minibenching
___ Seeding established as a perennial vegetative cover with a density of 70% of the native background vegetative cover.
X Others Describe: Roadway Cut Ditch

VI. MAINTENANCE AND INSPECTIONS

A. Frequency of Inspections:
X At least once every 7 calendar days, OR
___ Every 14 calendar days and within 24 hours after a rainfall of 0.5 inches (12.7 mm) or more.

NOTE: RAINFALL GAUGE TO BE KEPT ON-SITE TO DETERMINE DEPTH OF RAINFALL

B. Inspection Procedure:

ADEQ's AZPDES inspection checklist and AZPDES Compliance Evaluation Report will be completed by the contractor, or his representative, and will be kept on file. If repairs are necessary, they shall be initiated within 24 hours of the inspection report.

VII. CERTIFICATION OF COMPLIANCE WITH FEDERAL, STATE AND LOCAL REGULATIONS

A. This Storm Water Pollution Prevention Plan has been prepared in accordance with ADOT's EROSION AND POLLUTION CONTROL MANUAL FOR HIGHWAY DESIGN AND CONSTRUCTION, published by ADOT, Highways Division. (June 1995)

X No other Federal, State or Local Regulations Apply.

PART 2 - To be completed by ADOT & CONTRACTOR

I. SCHEDULE OF MAJOR ACTIVITIES

A. Project Schedule:
Start Date:
End Date:

B. Construction Sequencing Schedule:
(Attach Additional Sheets)

Construction Activity

II. INVENTORY OF POLLUTANTS

A. The materials or substances checked below are expected to be onsite during construction:

___ Concrete ___ Asphalt
___ Paints ___ Fertilizer
___ Herbicides ___ Wood
___ Fuel ___ Oil
___ Others, List:

III. POLLUTION CONTROL MEASURES

A. Other Best Management Practices:

___ Solid Waste Management
___ Equipment Maintenance Procedures
___ Designated Washout Areas
___ Stabilized Construction Entrance
___ Protected Chemical and Material Storage Area
___ Other, Describe:

IV. SPILL PREVENTION AND RESPONSE

A. Spill Prevention:
The procedures outlined in the Best Management Practices listed under Pollution Control Measures will be followed to prevent and contain spills of hazardous material. These preventative action include BMP's on equipment maintenance and proper handling, storage and disposal of chemicals and materials. All manufacturer's recommendations for usage, clean-up and disposal shall be followed.

B. Spill Response:
In the event of any accidental spill of chemicals or hazardous materials, contact the ADOT Hazardous Materials Specialist at ADOT's Safety and Health Section (Ph. # (602)712-7744 or Pager # (520) 320-8772). If a reportable quantity is discharged in the storm water, ADOT shall contact the National Response Center and document the spill to the EPA. ADOT's Hazardous Materials Specialist shall provide instructions.

V. POLLUTION PREVENTION PLAN CERTIFICATION

A. I certify under penalty of law that I have personally examined and am familiar with the information submitted in this application and all attachments and that, based on my inquiry of those persons immediately responsible for obtaining the information contained in the application. I believe that the information is true, accurate and complete. I am aware that there are significant penalties for submitting false information, including the possibility of fine and imprisonment.

B. The operator/contractor as defined in AZPDES should sign the SWPPP in accordance with Part VII. K, and retain the plan on-site at the construction site or other location easily accessible during normal business hours.

Signature:
Date:
Name:
Title:
Company:

C. ADOT Resident Engineer
Signature:
Date:
Name:
Title:
ADOT District:

D. MUNICIPALITY (For local Government Project)
Signature:
Date:
Name:
Title:
Municipality:

VI. OTHER REQUIREMENTS

A. A copy of the General Permit is attached in accordance to AZPDES General Permit for Storm Water Discharges From Construction Activities To The Water Of The United States.

B. Projects that are within 1/4 mile of impaired or unique waters require the SWPPP to be sent to ADEQ in combination with the NOI.

REDUCED SIZE DO NOT SCALE

	NAME	DATE
DESIGN	G. CHILD	04/05
DRAWN	M. GUILLEN	04/05
CHECKED	G. POTTER	04/05

SUNRISE ENGINEERING
2152 SOUTH VINEYARD SUITE 151 MESA, ARIZONA 85210 TEL 480.768.8600 FAX 480.768.8609
www.sunrise-eng.com

ARIZONA DEPARTMENT OF TRANSPORTATION
INTERMODAL TRANSPORTATION DIVISION
ROADWAY DESIGN SERVICES

AZPDES SWPPP INDEX SHEET

ROUTE: SR 89
LOCATION: BRAMBLE INTERSECTION

REGISTERED PROFESSIONAL ENGINEER (CIVIL) CERTIFICATE NO. 41104 GEOFFREY S. CHILD

SHEET 1 OF 1

TRACS NO. H6172 01C | 089-B-502 | 22 OF 30

6/30/2005 p:\adot-01065-sr89\Proposed\RoadwayDesign\h6172_01c sw01.dgn

Click here for SR 89 Index

F.H.W.A. REGION	STATE	PROJECT NO.	SHEET NO.	TOTAL SHEETS	AS BUILT
9	ARIZ.	S-089-B-502	24	30	
		089 YV 338			

LEGEND:

E1	Detail E1 On Sheet 24

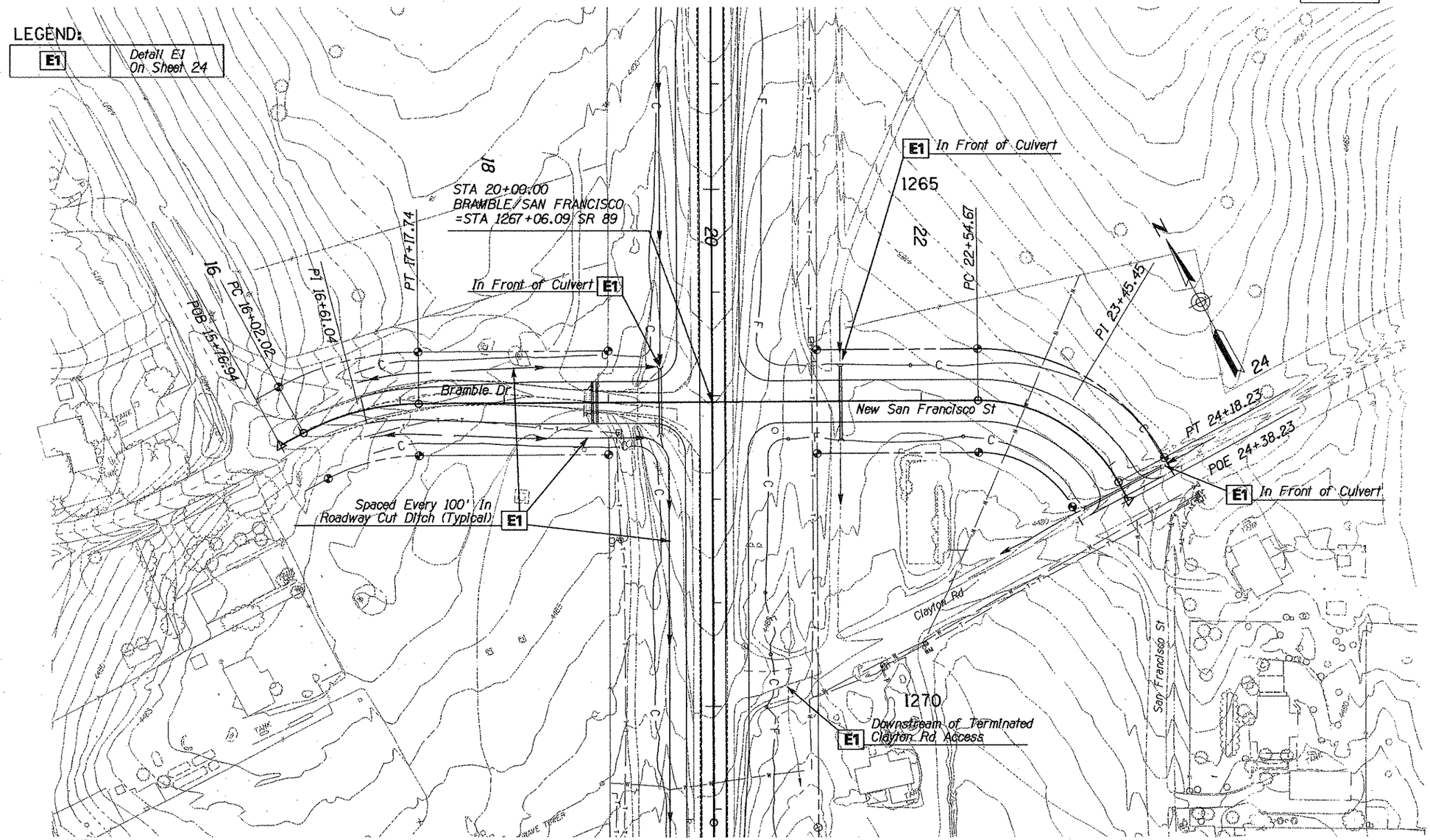

NOTE:
ALL UNPAVED DISTURBED AREAS SHALL BE SEEDED ACCORDING TO THE SPECIAL PROVISIONS (PROJECT TOTAL = APPROXIMATELY 3 ACRES)

REDUCED SIZE DO NOT SCALE

	NAME	DATE
DESIGN	G. CHILD	04/05
DRAWN	M. GUILLEN	04/05
CHECKED	G. POTTER	04/05

SUNRISE ENGINEERING www.sunrise-eng.com
2232 SOUTH VINEYARD SUITE 123 MESA, ARIZONA 85210 TEL 480.768.8600 FAX 480.768.8600

ARIZONA DEPARTMENT OF TRANSPORTATION
INTERMODAL TRANSPORTATION DIVISION
ROADWAY DESIGN SERVICES

EROSION AND SEDIMENT CONTROL PLAN

Registered Professional Engineer (Civil) CERTIFICATE NO. 41184 GEOFFREY S. CHILD

ROUTE	LOCATION	
SR 89	BRAMBLE INTERSECTION	SHEET 2 OF 2
TRACS NO. H6172 01C	089-B-502	24 OF 30

6/30/2005 p:\adot-01065-sr89\Proposed\RoadwayDesign\h6172_01c sw03.dgn

Click here for SR 89 Index

Date: 2/11/05

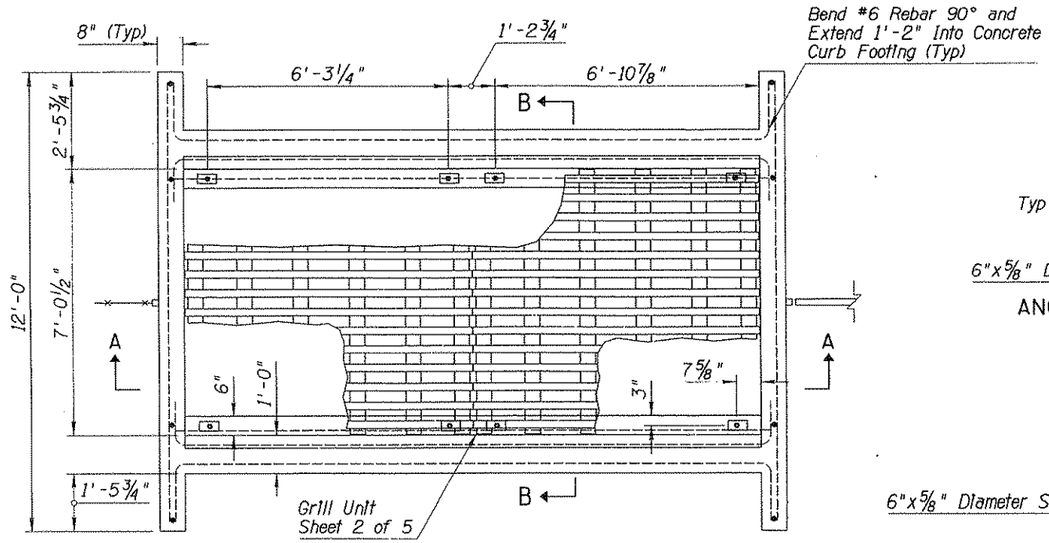

PLAN

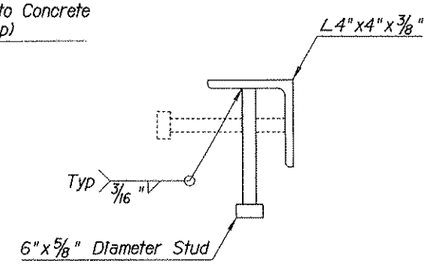

ANGLE ASSEMBLY DETAIL 1

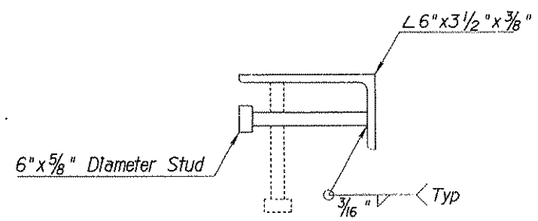

ANGLE ASSEMBLY DETAIL 2

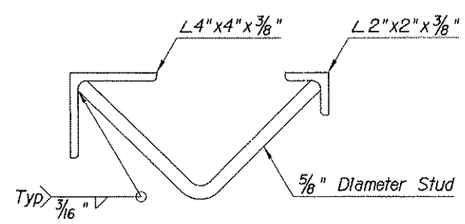

ANGLE ASSEMBLY DETAIL 3

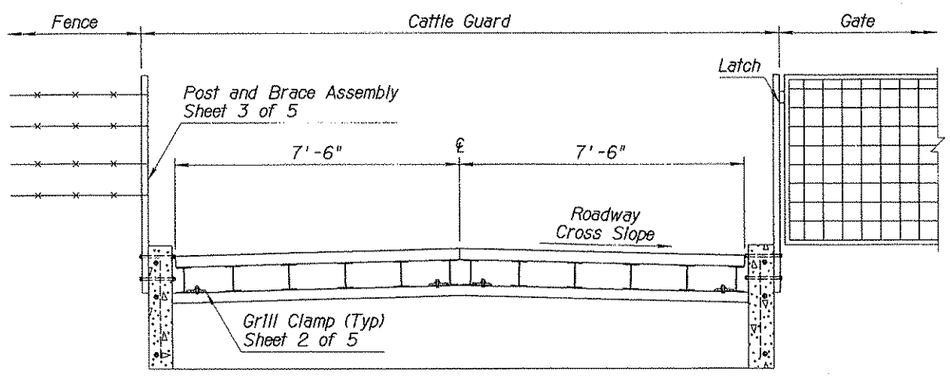

SECTION A-A

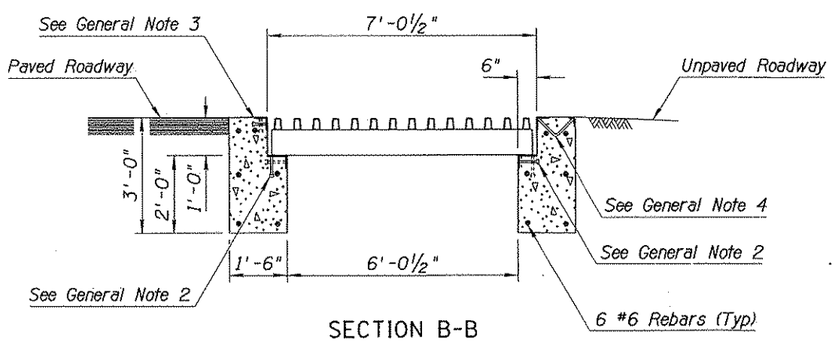

SECTION B-B

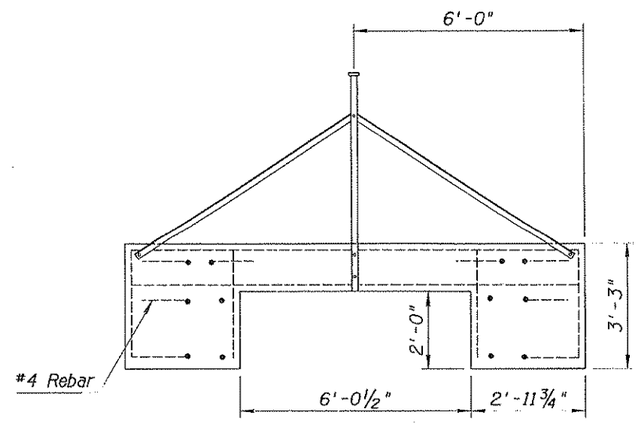

END VIEW

F.H.W.A. REGION	STATE	PROJECT NO.	SHEET NO.	TOTAL SHEETS	AS BUILT
9	ARIZ.	S-089-B-502	26	30	

089 YV 338

GENERAL NOTES

1. Cattle guard shall include two (2) clamps from either Sheet 4 OR 5 at each gap between two (2) grill units, one at each end. All clamps on a cattle guard shall be the same type. Clamps shall be adjusted to provide a 1/4-inch, plus or minus 1/16-inch gap between adjacent grill units.
2. Grill units shall be set on an angle iron assembly consisting of one piece of 6"x3½"x⅜" angle iron and studs with a head. The studs shall be placed on 1'-0" alternate centers. See Angle Assembly Detail 2.
3. Cattle guard shall be sloped to conform to the roadway grade and cross-section, except that where an odd number of grill units is specified in a crowned roadway, the center grill unit shall have a level cross slope.
4. Where the adjacent roadway is paved, an angle iron assembly shall consist of one piece of 4"x4"x⅜" angle iron and studs with a head. The studs shall be placed on 1'-0" alternate centers. See Angle Assembly Detail 1.
5. Where the adjacent roadway is unpaved, an angle iron assembly shall consist of one 4"x4"x⅜" angle iron, one 2"x2"x⅜" angle iron, and connected with studs. The assembly shall be crowned at the centerline and constructed with a bevel cut and welded. The studs shall be bent 90° and placed on 1'-0" centers. See Angle Assembly Detail 3.
6. Each angle iron and angle iron assembly shall be fabricated to form a single piece for the full length of the cattle guard.
7. Quantities shown for concrete and rebars are approximations for informational purposes only.
8. When gate is to be installed it shall be called out on the plans.
9. All rebar shall have a minimum cover of 3", or as shown on the plans.
10. Cattle guard beams shall be HS-20 loading unless otherwise shown on the plans.

REDUCED SIZE DO NOT SCALE

UNIT TABLE			
Roadway Width (ft)	Grill Units Required	Concrete (Cu. Yd)	Rebar (Lbs)
12	2	5.8	175
16	3	8.0	240
20	4	10.3	310
28	5	12.5	375
34	6	14.7	445
36	6	14.7	445
38	7	16.9	510
40	7	16.9	510

DETAIL X

Sheet 1 of 5

ROADWAY CATTLE GUARD

Note to Designer:
The information presented in this Standard Detail has been prepared in accordance with recognized engineering principles and is for general use. It should not be used for specific application without competent professional examination and verification of its suitability and applicability by a licensed professional engineer. Contents within the inner border line shall not be altered.

NO.	DESCRIPTION OF REVISIONS	MADE BY	DATE
1	ADDED GENERAL NOTE 10	RLF	2/11/05
2	MINOR GRAPHICAL REVISIONS	RLF	2/11/05
3			
4			

DESIGN APPROVED: Kenneth R. Cooper	ARIZONA DEPARTMENT OF TRANSPORTATION INTERMODAL TRANSPORTATION DIVISION ROADWAY GROUP PLANS DETAIL	
APPROVED FOR DISTRIBUTION: William J. Lyons	ROADWAY CATTLE GUARD	
ROUTE SR 89 / LOCATION: BRAMBLE INTERSECTION		SHEET 1 OF 5
TRACS NO. H6172 01C	089-B-502	26 OF 30

Date: 2/11/05

Click here for SR 89 Index

F.H.W.A. REGION	STATE	PROJECT NO.	SHEET NO.	TOTAL SHEETS	AS BUILT
9	ARIZ.	S-089-B-502	28	30	

089 YV 338

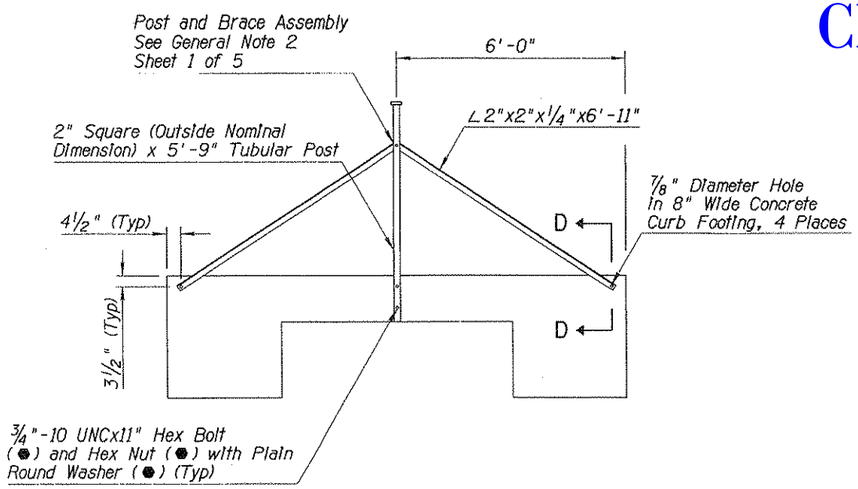

END VIEW

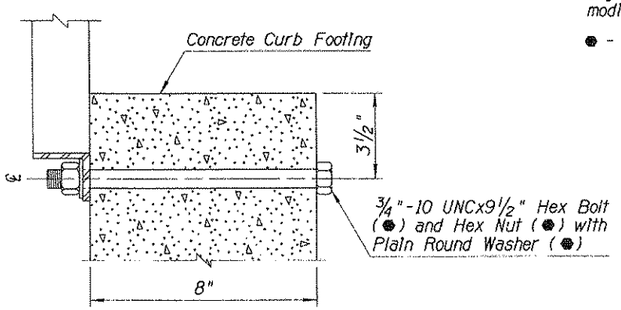

SECTION D-D

GENERAL NOTES

1. Material for shoulder transition shall be placed to the finished roadway elevation for the entire length of the transition. When the roadway is paved, aggregate subbase or AB shall be used. When the roadway is unpaved, a material equivalent to the existing roadway shall be used.
2. On steeper grades, the post shall be installed plumb to align with adjacent fencing. The brace assembly may be modified as necessary to support the post.

● - Indicates AASHTO, AGC & ARTBA Task Force 13 designation

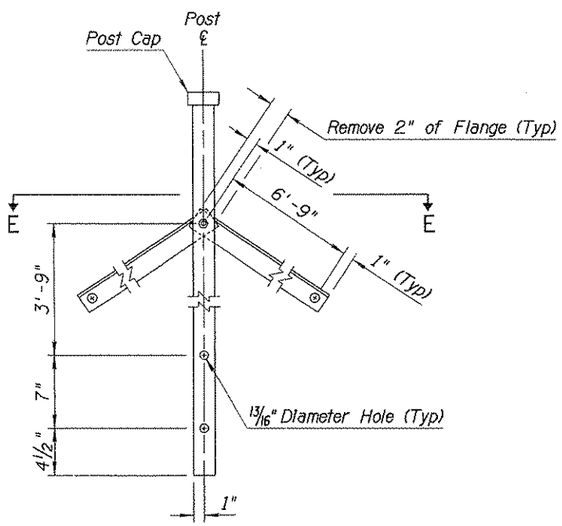

POST AND BRACE ASSEMBLY

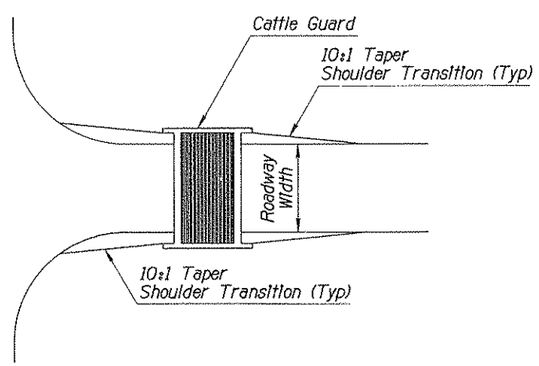

SHOULDER TRANSITION AT CATTLE GUARDS

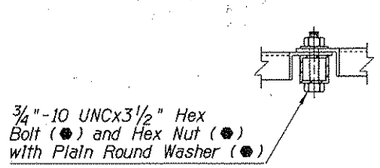

SECTION E-E

DETAIL X

Sheet 3 of 5

ROADWAY CATTLE GUARD

REDUCED SIZE DO NOT SCALE

DESIGN APPROVED: Kenneth R. Cooper	ARIZONA DEPARTMENT OF TRANSPORTATION INTERMODAL TRANSPORTATION DIVISION ROADWAY GROUP PLANS DETAIL
APPROVED FOR DISTRIBUTION: William J. Lyons	ROADWAY CATTLE GUARD
ROUTE: SR 89 / LOCATION: BRAMBLE INTERSECTION	SHEET 3 OF 5
TRACS NO. H6172 01C / 089-B-502	28 OF 30

NO	MINOR GRAPHICAL REVISIONS	DESCRIPTION OF REVISIONS	MADE BY	DATE
1			RLF	2/11/15
2				
3				
4				

Note to Designer:
The information presented in this Standard Detail has been prepared in accordance with recognized engineering principles and is for general use. It should not be used for specific application without competent professional examination and verification of its suitability and applicability by a licensed professional engineer. Contents within the inner border line shall not be altered.

Date: 2/03/09

Note to Designer:
The information presented in this Standard Detail has been prepared in accordance with recognized engineering principles and is for general use. It should not be used for specific application without competent professional examination and verification of its suitability and applicability by a licensed professional engineer. Contents within the inner border line shall not be altered.

NO	MINOR GRAPHICAL REVISIONS	MADE BY	DATE
1		RLF	2/11/16
2			
3			
4			

DESCRIPTION OF REVISIONS

F.H.W.A. REGION	STATE	PROJECT NO.	SHEET NO.	TOTAL SHEETS	AS BUILT
9	ARIZ.	S-089-B-502	30	30	
		089 YV 338			

Click here for SR 89 Index

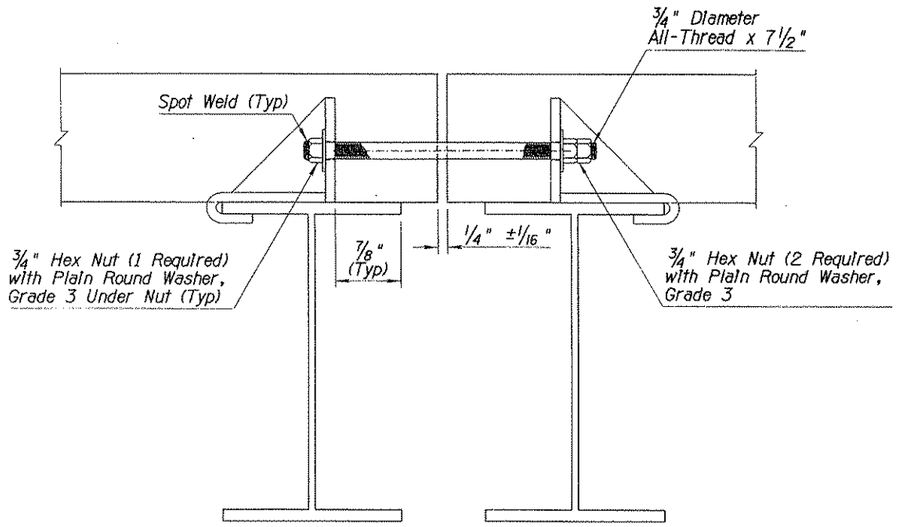

ELEVATION

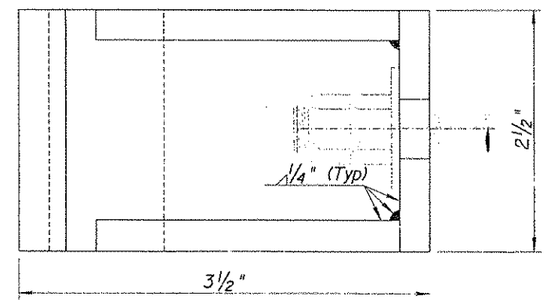

PLAN

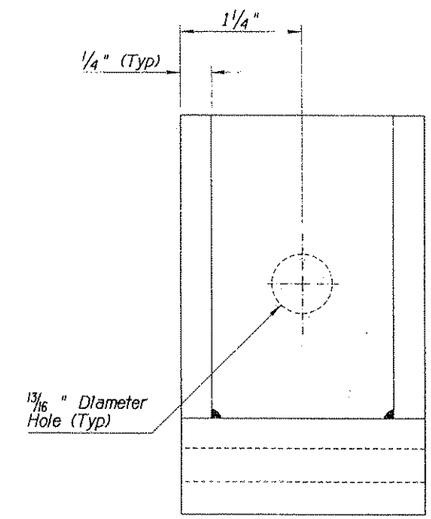

DETAIL B

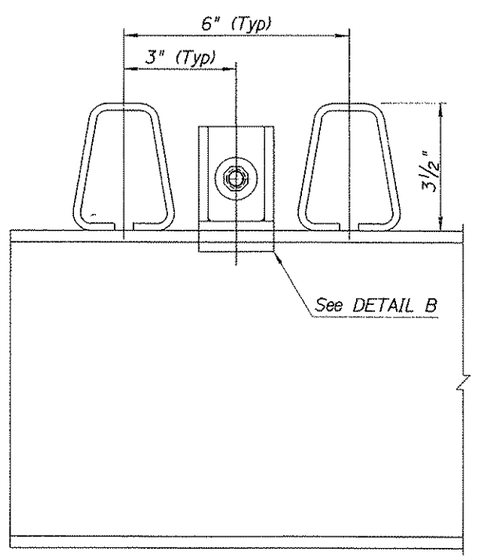

SECTION A-A

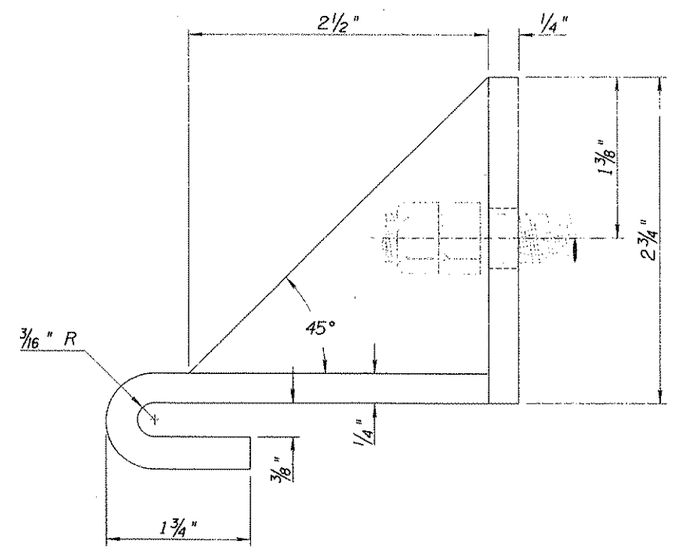

ELEVATION

REDUCED SIZE
DO NOT SCALE

DETAIL X

Sheet 5 of 5

CLAMP - OPTION B

DESIGN APPROVED: Kenneth R. Cooper	ARIZONA DEPARTMENT OF TRANSPORTATION INTERMODAL TRANSPORTATION DIVISION ROADWAY GROUP PLANS DETAIL
APPROVED FOR DISTRIBUTION: William J. Lyons	ROADWAY CATTLE GUARD
ROUTE: SR 89 / LOCATION: BRAMBLE INTERSECTION	SHEET 5 OF 5
TRACS NO. H6172 01C	089-B-502 / 30 OF 30