FHWA REGION	STATE	PROJECT NUMBER	SHEET NUMBER	TOTAL SHEETS	FINALIZED PLANS
9	ARIZ.	M-950-2-701	1	16	

DRAWING NUMBER	D-14-T-354

STATE OF ARIZONA
DEPARTMENT OF TRANSPORTATION

HIGHWAYS DIVISION

RIGHT OF WAY PLAN OF THE
YUMA URBAN AREA
1 ST STREET-30TH STREET
BUSINESS ROUTE 8
PROJECT NO. M-950-2-701

YUMA COUNTY-DISTRICT 1
LENGTH OF PROJECT = 3.566 MILES

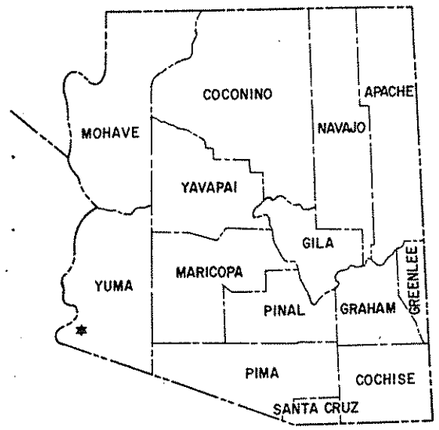

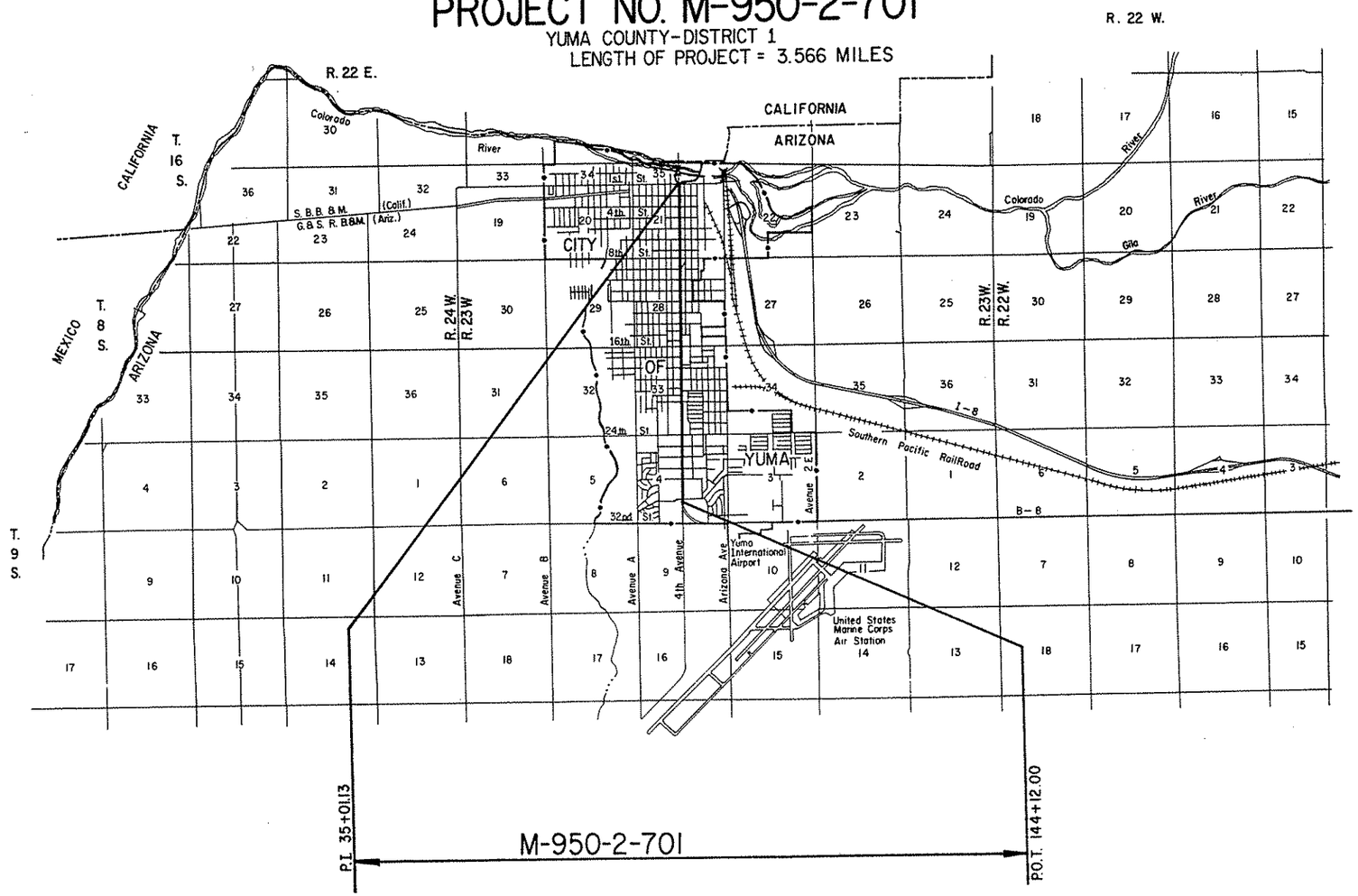

Public Hearing Requirements satisfied *Not Required*
Environmental Impact Statement Requirements satisfied *Not Required*

Approved in accordance with Roadway Plans

DEPUTY STATE ENGINEER — DATE 2-2-79

ARIZONA DEPARTMENT OF TRANSPORTATION BOARD
Approved for Right of Way Acquisition in accordance with Resolution Number 79-01-A-01 Dated 1-6-79

Oscar T. Lyon, Jr. State Engineer

CHIEF DEPUTY STATE ENGINEER — DATE 2/2/79

U.S. DEPARTMENT OF TRANSPORTATION
FEDERAL HIGHWAY ADMINISTRATION

DIVISION ENGINEER — DATE

Click here for I 8 Index

YUMA URBAN AREA
1st STREET-30th STREET
YUMA COUNTY

Click here for I 8 Index

REVISIONS			
C.O. No.	DATE	BY	DESCRIPTION

PROJECT NO.	M-950-2-701
DRAWING NO.	D-14-T-354
SHEET NO.	2 OF 16
DRAWN BY	BOB O.
DATE COMP.	1-30-79
SCALE	———

A

Acres	Ac.
Ahead	Ahd.
And	&
And Wife	et ux
And Others	et al
And Husband	et vir
Angle	∠
Approximate	Approx.
Arbitrary	Arb.
Asphalt	Asph.
At	@
Avenue	Ave.

B

Back	Bk.
Bank Protection	B.P.
Barbed Wire	B.W.
Bearing	Brng.
Beginning	Beg.
Book	Bk.
Borrow	Bor.
Boulevard	Blvd.
Boundary	Bndry.
Brass Cap	B.C.
Bridge	Br.
Building	Bldg.
Bureau of Indian Affairs	B.I.A.
Bureau of Land Management	B.L.M.
Bureau of Reclamation	B.R.

C

Calculated	Calc. or C
Cattle Guard	C.G.
Center	Ctr.
Center to Center	C. to C
Centerline	℄
Channel	Chan.
Concrete	Conc.
Concrete Box Culvert	C.B.C.
Construction	Constr
Contractor	Cont.
Corner	Cor.
Corrugated Metal Pipe	C.M.P.
County	Co.
Creek	Ck.
Cubic Yard	C.Y.
Culvert	Culv.
Curve Data	
Curve to Spiral	C.S.
Degree of Change per 100'	a
Length of Curve	L
Radius	R
Spiral to Curve	S.C.
Spiral to Tangent	S.T.
Delta	Δ
Point of Curve	P.C.
Deflection (Total Curve)	I
Curve Data	
Point of Tangent	P.T.
Point of Compound Curve	P.C.C.
Point of Reverse Curve	P.R.C.
Point of Reverse Spiral	P.R.S.
Point of Intersection	P.I.
Degree of Curve	D
Tangent Length	T
Tangent to Spiral	T.S.

D

Deceleration	Decel.
Deflection	Defl.
Department	Dept.
Detour	Det.
Diameter	Dia.
Distance	Dist.
Ditch and Dyke	D & D
Docket	Dkt.
Drawing	Dwg.
Drive	Dr.
Dyke	Dk.
Drainage	Drn.
Drainage Easement	D.E.

E

Each	Ea.
Easement	Esmt.
East	E
Elevation	Elev.
Embankment	Emb.
Engineer	Engr.
Equal	Eq. or =
Equation	Equa.
Excavation	Excav.
Existing	Exist.
Extend	Ext.

F

Federal	Fed.
Feet	Ft. or '
Fence	Fc.
Flowage Easement	F.E.
Forest	For.
Found	Fnd.
Frame	Fr.
Freeway	Frwy.
Future	Fut.

G

Galvanized	Galv.
Gauge	Ga.
Government	Govt.
Grader	Gr.
Guard	Gd.

H

Headwall	Hdwl.
Highway	Hwy.
House	Hse.

I

Inch	In. or "
Include	Incl.
Interchange	Intcg.
Iron Pipe	I.P.
Irrigation	Irr.

J

Joint	Jt.
Junction	Jct.

L

Left	Lt.
Length	Lgth.
Line	Ln.
Linear Feet	L.F.
Local Tangent Bearing	L.T.B.

M

Manhole	M.H.
Material	Matl.
Maximum	Max.
Median	Med.
Mile	Mi.
Mile Post	M.P.
Minimum	Min.
Minute	'
Miscellaneous	Misc.
Monument	Mon.
Mountain	Mt.

N

National	Natl.
North	N.
Number	No.

O

Opening	Opng.
Outside Diameter	O.D.
Office	Off.

P

Page	Pg.
Parcel	Par.
Parkway	Pkwy.
Per	/
Percent	%
Place	Pl.
Point on Curve	P.O.C.
Point on Tangent	P.O.T.
Point on Semi-Tangent	P.O.S.T.
Power Line	P.L.
Private	Pvt.
Project	Proj.
Property	Prop.
Proposed	Propsd
Protection	Prot.

Q

Quadrant	Quad.

R

Railroad	R.R.
Range	Rng. or R.
Record	Rec. or (R)
Reinforced	Reinf.
Reinforced Concrete Pipe	R.C.P.
Required	Reqd.
Reservation	Res.
Right	Rt.
Right of Way	R/W
Road	Rd.
Roadway	Rdwy.

S

Second	"
Section	Sec.
Sheet	Sht.
Skew	Sk.
Slope Easement	S.E.
South	S.
Specifications	Specs.
Square	Sq.
Square Feet	⌀
State Route	S.R.
Station	Sta.
Street	St.
Subdivision	Subdiv.
Survey	Sur.

T

Telegraph	Tlg.
Telephone	Tel.
Township	Twp. or T.
Temporary Construction Easement	T.C.E.
Traffic Interchange	T.I.
Turnout	T.O.
Typical	Typ.

U

United States General Land Office	U.S.G.L.O.
Underground	Ungnd.

V

Vertical	Vert.

W

West	W
West Bound	W.B.
Warranty Deed	W.D.

Y

Yard	Yd.

STANDARD ABBREVIATIONS

YUMA URBAN AREA
1st STREET – 30th STREET
YUMA COUNTY

Click here for I 8 Index

REVISIONS					
C.O.No.	DATE	BY	DESCRIPTION	PROJECT NO.	M-950-2-701
				DRAWING NO.	D-14-T-354
				SHEET NO.	3 OF 16
				DRAWN BY	BOB O.
				DATE COMP.	1-30-79
				SCALE	———

ITEM	SYMBOL
HIGHWAY SURVEY CENTERLINE	
HIGHWAY CONSTRUCTION CENTERLINE	
HIGHWAY CENTERLINE (EXISTING)	
HIGHWAY RIGHT OF WAY LINE (NEW)	
HIGHWAY RIGHT OF WAY LINE (EXISTING)	
CONTROLLED ACCESS (FULL)	
CONTROLLED ACCESS (PARTIAL)	
CONTROLLED ACCESS (EXISTING)	
RAILROAD RIGHT OF WAY LINE	
RAILROAD RIGHT OF WAY LINE COMMON TO HIGHWAY RIGHT OF WAY LINE (EXISTING)	
NATIONAL OR STATE BOUNDARY LINE	
FOREST, NATIONAL MONUMENT, MILITARY OR INDIAN RESERVATION	
COUNTY LINE	
TOWNSHIP OR RANGE LINE	
SECTION LINE	
QUARTER OR MID SECTION LINE	
SIXTEENTH OR GOVERNMENT LOT LINE	
LAND GRANT BOUNDARY LINE	
CITY LIMITS BOUNDARY LINE	
SUBDIVISION OR LOT BOUNDARY LINE	
PROPERTY OWNERSHIP BOUNDARY LINE	
PROPERTY LEASE BOUNDARY LINE	L L
SURVEY MEANDER LINE	
POWER LINE	
POWER TRANSMISSION LINE	
TELEPHONE OR TELEGRAPH LINE	
TELEPHONE AND POWER LINE (COMBINATION)	
UNDERGROUND TELEPHONE CABLE	T T T T
WATER UTILITY LINE	W 6" W 6" W
NATURAL GAS UTILITY LINE	G 2" G 2" G
SANITARY SEWER LINE	S 8" S 8" S
STORM SEWER LINE	SS 36" SS 36" SS

ITEM	SYMBOL
HIGHWAY SLOPE OR DRAINAGE EASEMENT (NEW)	
HIGHWAY SLOPE OR DRAINAGE EASEMENT (EXISTING)	
TEMPORARY CONSTRUCTION EASEMENT (NEW)	
ROAD (NEW) (SHOULDER TO SHOULDER WIDTH)	
ROAD (EXISTING) (SHOULDER TO SHOULDER WIDTH)	
RAILROAD TRACK	
RIVER OR CREEK (CONTINUOUS FLOW)	
RIVER OR CREEK (INTERMITTENT FLOW)	
NATURAL DRAINAGE OR A WASH	
CANAL, CHANNEL, OR DITCH (NEW)	
CANAL, CHANNEL, OR DITCH (EXISTING)	
IRRIGATION DITCH OR LINE (NEW)	IRR IRR
IRRIGATION DITCH OR LINE (EXISTING)	IRR IRR
DYKE OR LEVEE (NEW)	
DYKE OR LEVEE (EXISTING)	
BANK PROTECTION	
RETAINING WALL	
CONSTRUCTION OR SLOPE LIMITS	
WIRE OR BARBED WIRE FENCE	
CHAIN LINK FENCE	
WOOD FENCE	
STONE FENCE	
ROAD GUARD (NEW)	
ROAD GUARD (EXISTING)	
CURB	
CURB AND GUTTER	
DEPRESSED CURB WITH GUTTER (NEW)	
DEPRESSED CURB WITH GUTTER (EXISTING)	
TREES (DECIDUOUS)	
TREES (CONIFEROUS)	
HEDGE OR SHRUBBERY	

EXIST. PAVEMENT

NEW PAVEMENT

NEW STRUCTURES (BRIDGES, ETC. NOT COVERED BY PAVEMENT)

EXIST. PAVEMENT, TO BE OBLITERATED

EXCESS TAKE

ITEM	SYMBOL
BRIDGE (NEW)	
BRIDGE (EXISTING)	
PIPE CULVERT (NEW)	
PIPE CULVERT (EXISTING)	
BOX CULVERT (NEW)	
BOX CULVERT (EXISTING)	
CATTLE GUARD (NEW)	
CATTLE GUARD (EXISTING)	
GATE (NEW)	
GATE (EXISTING)	
FORD (NEW)	
FORD (EXISTING)	
TRAFFIC DIRECTIONAL FLOW ARROWS	
DRAINAGE DIRECTIONAL FLOW ARROWS	
PROPERTY LIMIT ARROWS	
LEASE LIMIT ARROWS	L L
PROPERTY TIE BARS	
SURVEY MONUMENT, NEW	
SURVEY MONUMENT, EXISTING	
NEW RIGHT OF WAY CONTROL POINT	
RIGHT OF WAY MARKER, EXISTING	

NORTH ARROW

○ FOUND SEC. COR. or 1/4 COR.

+ UNFOUND SEC. COR. or 1/4 COR.

(3) FOUND CENTER SEC.

(3) UNFOUND CENTER SEC.

5/32" Diameter Circle. No. 1 Rapidograph Pen, Or Equal.

SECTION CORNER

(3) 1/2" Diameter Circle. No. 1 Rapidograph Pen, Or Equal.

CENTER OF SECTION

5/32" Diameter Circle. No. 1 Rapidograph Pen, Or Equal.

1/4 CORNER

(7-614) PARCEL BUBBLE Size 3/4" (7-614) (7-614-L1)

STANDARD SYMBOLS

YUMA URBAN AREA
1st STREET-30th STREET
YUMA COUNTY

Click here for I 8 Index

REVISIONS			
C.O. No.	DATE	BY	DESCRIPTION
5351	4-9-79	KS	Revd owner Pars. 14-326, 14-331. Revd area
"	"	"	14-326
5365	4-22-79	KS	Deleted Pars. 14-323, 14-341. Revd areas
"	"	"	14-332
5417	8-3-79	J.Mc.	Revd. owner Par. 14-319, 14-332,
"	"	"	Deleted 14-324-L1
5468	10-16-79	M. Romo	REVD OWNER PAR. 14-323, TOTAL & REMAINDER AREAS
"	"	"	REV'D OWNER PAR. 14-319

PROJECT NO.	M-950-2-701
DRAWING NO.	D-14-T-354
SHEET NO.	4 OF 16
DRAWN BY	BOB O.
DATE COMP.	1-30-79
SCALE	—

OWNERSHIP RECORD / ACQUISITION RECORD

PARCEL NUMBER	OWNER	DESCRIPTION	TOTAL AREA	AREA REQUIRED: GROSS INCLUDING EXISTING R/W	AREA REQUIRED: NET EXCLUDING EXISTING R/W	EASEMENT AREA	REMAINDER: LEFT	REMAINDER: RIGHT	SHEET NUMBER	COMMISSION APPROVAL	TYPE & DATE OF INSTRUMENT	RECORDED: DATE	RECORDED: BOOK	RECORDED: PAGE
14-317	Elsa M. Blair	Pt. of Lot 2 Blk. 174 The Town of Yuma	28,000 ±		84 ±		27,916 ±		8	1-3-80	W.D. 6-20-79	1-28-80	1143	752-753
-L1	Standard Oil Co. of California	Pt. of Lot 2 Blk. 174 " " " "	15,000 ±		84 ±		14,916 ±		8	1-30-80	RELEASE 10-18-79	NOT	RECORDED	
14-318	Yuma Union High School District, Trustee	Pt. of Lot 3 Blk. 174 " " " "	12,132 ±		13 ±			12,119 ±	8	11-21-79	WD 6-28-79	12-19-79	1137	108-109
14-319	John J. Peach, S/S	Pt. of Lot 12 Blk. 98 Townsite of Yuma	70,000 ±		13 ±		69,987 ±		8	3-26-80	WD 4-25-79	4-14-80	1158	423-25
14-320	John J. Peach, et ux	Pt. of Lot 1 Blk. 99 " " "	42,000 ±		13 ±			41,987 ±	8	8-1-79	WD 4-25-79	9-4-79	1119	78-79
14-321	The First Baptist Church of Yuma	Pt. of Lot 1 Blk. 112 " " "	35,000 ±		13 ±			34,987 ±	9	9-25-79	WD 7-11-79	10-17-79	1126	87-88
14-322	The City of Yuma	Pt. of Lot 7 Blk. 113 " " "	168,000 ±		13 ±		167,987 ±		9	8-29-79	WD 6-20-79	9-18-79	1121	470-471
~~14-323~~	~~Jack Barrett, et ux~~	~~Pt. of Lot 6 Blk. 112 " " "~~	~~14,000 ±~~		~~13 ±~~	Deleted	4-22-79	~~13,987 ±~~	~~9~~					
14-324	Stephen B. Drogin, et al	Pt. of Lot 12 Blk. 118 " " "	9,000 ±		13 ±		8,987 ±		9	8-29-79	WD 5-14-79	9-21-79	1122	75-76
~~-L1~~	~~The Texas Company~~	~~Pt. of Lot 12 Blk. 118 " " "~~	~~9,000 ±~~		~~13 ±~~ Deleted		~~8,987 ±~~		~~9~~					
14-325	Yuma School District No. 1	Pt. of Lot 1 Blk. 119 Pt. of Lot 6 Blk. 132 " " "	686,475 ±		25 ±			686,450 ±	9, 10	9-12-79	WD 5-11-79	10-9-79	1124	767-768
14-326	Dana Pontiac-Buick	Pt. of Lot 7 Blk. 118 " " "	~~70,988 ±~~ 103,600 ±		13 ±		~~67,987 ±~~ 103,587 ±		10	8-29-79	WD 4-25-79	9-21-79	1122	77-78
14-327	John Gutierrez, et ux	Pt. of Lot 12 Blk. 133 " " "	14,000 ±		13 ±		13,987 ±		10	8-1-79	WD 4-12-79	9-4-79	1119	76-77
14-328	Stanley F. Lane, et ux	Pt. of Lot 7 Blk. 133 " " "	14,000 ±		13 ±		13,987 ±		10	8-29-79	WD 4-25-79	9-21-79	1122	84-85
14-329	Joseph William Vaughn, et ux	Pt. of Lot 12 Blk. 149 " " "	7,360 ±		13 ±		7,347 ±		10	10-10-79	WD 7-11-79	11-9-79	1130	322-323
14-330	Terner Foundation	Pt. of Lot 1 Blk. 150 " " "	21,000 ±		13 ±			20,987 ±	10	1-15-80	ESMT 9-26-79	1-28-80	1143	739-741
-L1	Union Oil Co. of California	Pt. of Lot 1 Blk. 150 " " "	21,000 ±		13 ±			20,987 ±	10					
14-331	Elsa Katherine Gorges, et al	Pt. of Lot 7 Blk. 149 " " "	21,000 ±		13 ±		20,987 ±		11	12-19-79	WD 6-8-79	1-11-80	1140	937-938
14-332	Larry Garrett	Pt. of Lot 6 Blk. 150 " " "	35,000 ±		5 ± 2 ±			~~34,993 ±~~ 34,998 ±	11	9-12-79	WD 6-20-79	10-9-79	1124	769-772
14-333	P.E.N. Investment Co.	Pt. of Lot 8 Blk. 164 " " "	14,000 ±		13 ±		13,987 ±		11	9-12-79	WD 5-24-79	10-9-79	1124	775-776
-L1	Circle K Food Stores, Inc.	Pt. of Lot 8 Blk. 164 " " "	9,100 ±		13 ±		9,087 ±		11	9-12-79	RELEASE 7-20-79	NOT	RECORDED	
14-334	Richfield Oil Corporation	Pt. of Lot 1 Blk. 163 " " "	22,000 ±		13 ±			21,987 ±	11	8-29-79	QCD 6-1-79	9-21-79	1122	88-89
14-335	Claude Sharpensteen, Jr., et al	Pt. of Lot 10 Blk. 1 Yuma Heights Subdiv. Amended	66,290 ±		13 ±			66,277 ±	11	9-12-79	W.D. 6-26-79	10-9-79	1124	765-766
14-336	Peter C. Byrne, et al, Trustees	Pt. of Lot 1 Blk. 8 " "	40,630 ±		20 ±			40,610 ±	11	2-28-80	WD 4-26-79	3-24-80	1153	912-13
-L1	Ro-Ann Enterprises, Inc.	Pt. of Lot 1 Blk. 8 " "	40,630 ±		20 ±			40,610 ±	11					
14-337	Winchell Donut House, Inc.	Pt. of Lot 12 Blk. 5 Speese Addition to Yuma Amended	3,645 ±		7 ±		3,638 ±		11	9-12-79	W.D. 6-18-79	10-9-79	1124	777-778
14-338	Lakey Brothers General Tire	Pt. of Lot 7 Blk. 5 " " "	34,000 ±		13 ±		33,987 ±		12	12-19-79	WD 7-25-79	1-11-80	1140	939-940
14-339	Tune-Up Masters Inc. of Arizona	Pt. of Lot 8 Blk. 8 Yuma Heights Subdiv. Amended	~~21,384 ±~~ 21,384 ±		13 ±			~~21,371 ±~~ 21,371 ±	12	11-6-79	WD 8-30-79	12-5-79	1134	380-381
14-340	Arizona Auto Clinic, Inc.	Pt. of Lot 12 Blk. 12 Speese Addition to Yuma Amended	17,000 ±		13 ±		16,987 ±		12	2-28-80	WD 5-10-79	3-24-80	1153	908-9
~~14-341~~	~~Robert T. Cote~~	~~Pt. of Lot 1 Blk. 9 Yuma Heights Subdiv. Amended~~	~~68,429 ±~~		~~24 ±~~	Deleted	4-22-79	~~68,405 ±~~	~~12~~					
14-342	Metropolitan Life Insurance Co.	Pt. of Lot 7 Blk. 12 Speese Addition to Yuma Amended	93,000 ±		5 ±		92,995 ±		12	12-5-79	WD 9-13-79	1-9-80	1140	336-337

YUMA URBAN AREA

1st STREET–30th STREET

YUMA COUNTY

Click here for I 8 Index

REVISIONS			
C.O. No.	DATE	BY	DESCRIPTION
5320	2-28-79	P.Todd	Rev. Areas of Parcel 14-353.
5351	4-9-79	K.S.	Rev'd owner Par. 14-345
5365	4-22-79	KG	Deleted 14-353.
5411	7-10-79	P.Todd	Rev. Net & Rem. Areas of Parcel 14-351, 14-351-L1
5417	8-3-79	J. Mc.	Rev'd. owner Parcel 14-350
5468	10-26-79	M. Romo	REV'D OWNER PARCEL 14-349
5468	"	"	Deleted Parcel 14-356 & 356-L1

PROJECT NO.	M-950-2-701
DRAWING NO.	D-14-T-354
SHEET NO.	5 OF 16
DRAWN BY	BOB O.
DATE COMP.	1-30-79
SCALE	———

OWNERSHIP RECORD / ACQUISITION RECORD

PARCEL NUMBER	OWNER	DESCRIPTION	TOTAL AREA	AREA REQUIRED: GROSS INCLUDING EXISTING R/W	AREA REQUIRED: NET EXCLUDING EXISTING R/W	EASEMENT AREA	REMAINDER: LEFT	REMAINDER: RIGHT	SHEET NUMBER	COMMISSION APPROVAL	TYPE & DATE OF INSTRUMENT	RECORDED: DATE	RECORDED: BOOK	RECORDED: PAGE
14-343	Continental Service Corporation Trustee, Trust No. 24081	Pt. of Lot 8 Blk. 9 Yuma Heights Subdiv. Amended	42,768 ±		13 ±			42,755 ±	12	10-10-79	W.D. 7-13-79	11-9-79	1130	338-9
-L1	Rodney B. Haile, et al	Pt. of Lot 8 Blk. 9 " " " "	42,768 ±		13 ±			42,755 ±	12					
14-344	Mellon Farms, Inc.	Pt. of Lot 7 Blk. 13 Speese Addition to Yuma Amended	17,000 ±		13 ±		16,987 ±		13	10-10-79	W.D. 6-6-79	11-9-79	1130	332-333
14-345	Emma Stofella O'Brien, et al	Pt. of SW¼NW¼SW¼SE¼ Sec. 28, T. 8 S. R. 23 W.	22,800 ±		13 ±		22,787 ±		13	9-12-79	W.D. 4-27-79	10-9-79	1124	763-764
14-346	Midas Realty Corporation	Pt. of Lot 11 Edison Subdivision	20,643 ±		13 ±			20,630 ±	14	9-12-79	W.D. 6-27-79	10-9-79	1124	761-762
14-347	Kenyons Market, Inc.	Pt. of Lot 65 Los Altos Amended	88,049 ±		13 ±			88,036 ±	14	10-10-79	W.D. 7-11-79	11-9-79	1130	326-7
-L1	Central Markets, Inc.	Pt. of Lot 65 " " "	60,658 ±		13 ±			60,645 ±	14					
14-348	Western Savings & Loan Assc.	Pt. of NW¼, Sec. 33, T. 8 S. R. 23 W.	16,800 ±		50 ±			16,750 ±	14	8-29-79	W.D. 6-15-79	9-21-79	1122	82-83
14-349	Lee Homes Corporation	Pt. of SE¼NE¼NW¼, Sec. 33, T. 8 S. R. 23 W.	72,399 ±		50 ±			72,349 ±	14	1-3-80	W.D. 12-12-79	1-28-80	1143	742-3
14-350	John L. Ewing, et al	Pt. of Lot 11 Blk. 2 Palm Drive Subdiv. Amended	23,800 ±		50 ±		23,750 ±		15	9-25-79	W.D. 7-23-79	10-17-79	1126	93-94
14-351	D. Hazel McEuen	Pt. of Lot's 11 & 12 Blk. 1 " " "	23,800 ±		~~500~~ 260 ±		~~23,300~~ 23,540 ±		15	11-6-79	W.D. 8-15-79	12-5-79	1134	382-3
-L1	Der Weinerschnitzel Int'l., Inc.	Pt. of Lot's 11 & 12 Blk. 1 " " "	23,800 ±		~~500~~ 260 ±		~~23,300~~ 23,540 ±		15					
14-352	Leo E. Shay, Trustee	Pt. of NE¼NW¼, Sec. 33, T. 8 S. R. 23 W.	24,000 ±		50 ±			23,950 ±	15	8-29-79	W.D. 4-11-79	2-21-79	1122	69-70
~~14-353~~	~~Hudson Oil Co. of Missouri, Inc.~~	~~Pt. of N½NW¼SW¼NE¼, Sec. 33, T. 8 S. R. 23 W.~~	~~15,000~~ ±	Deleted	~~50~~ ~~13~~ ±	4-22-79	~~14,950~~ ~~14,987~~ ±		~~15~~					
14-354	Economy Lumber Co., Inc.	Pt. of NE¼SE¼NW¼, Sec. 33, T. 8 S. R. 23 W.	62,799 ±		50 ±			62,749 ±	15	11-21-79	W.D. 7-25-79	12-14-79	1136	333
14-355	Shay Oil Co., Inc.	Pt. of Lot 8 Blk. B La Mesa Hermosa Subdivision	21,000 ±		13 ±			20,987 ±	16	8-29-79	W.D. 5-9-79	9-21-79	1122	71-72
~~14-356~~	~~L. K. Murphy~~	~~Pt. of Lot 1 Blk. B " " " "~~	~~35,000~~ ±		~~50~~ DELETED 10-26-79			~~34,987~~ ±	~~16~~					
~~-L1~~	~~Travelodge Corporation~~	~~Pt. of Lot 1 Blk. B " " " "~~	~~35,000~~ ±		~~50~~ DELETED 10-26-79			~~34,987~~ ±	~~16~~					

HARD COPY
CHECKED BY
RUNNING 44-512

YUMA URBAN AREA
1st STREET – 30th STREET
YUMA COUNTY

Click here for I 8 Index

REVISIONS					
C.O. No.	DATE	BY	DESCRIPTION	PROJECT NO.	M-950-2-701
5365	4-24-79	K.G.	Deleted New R/W at NW cor. 4th St., SW Cor.	DRAWING NO.	D-14-T-354
"	"	"	10th St.	SHEET NO.	6 OF 16
5364	4-18-79	R.L.R.	Added Scale to V.M. + Hz. (Bid 502)	DRAWN BY	BOB O.
				DATE COMP.	1-30-79
				SCALE	1" = 500'

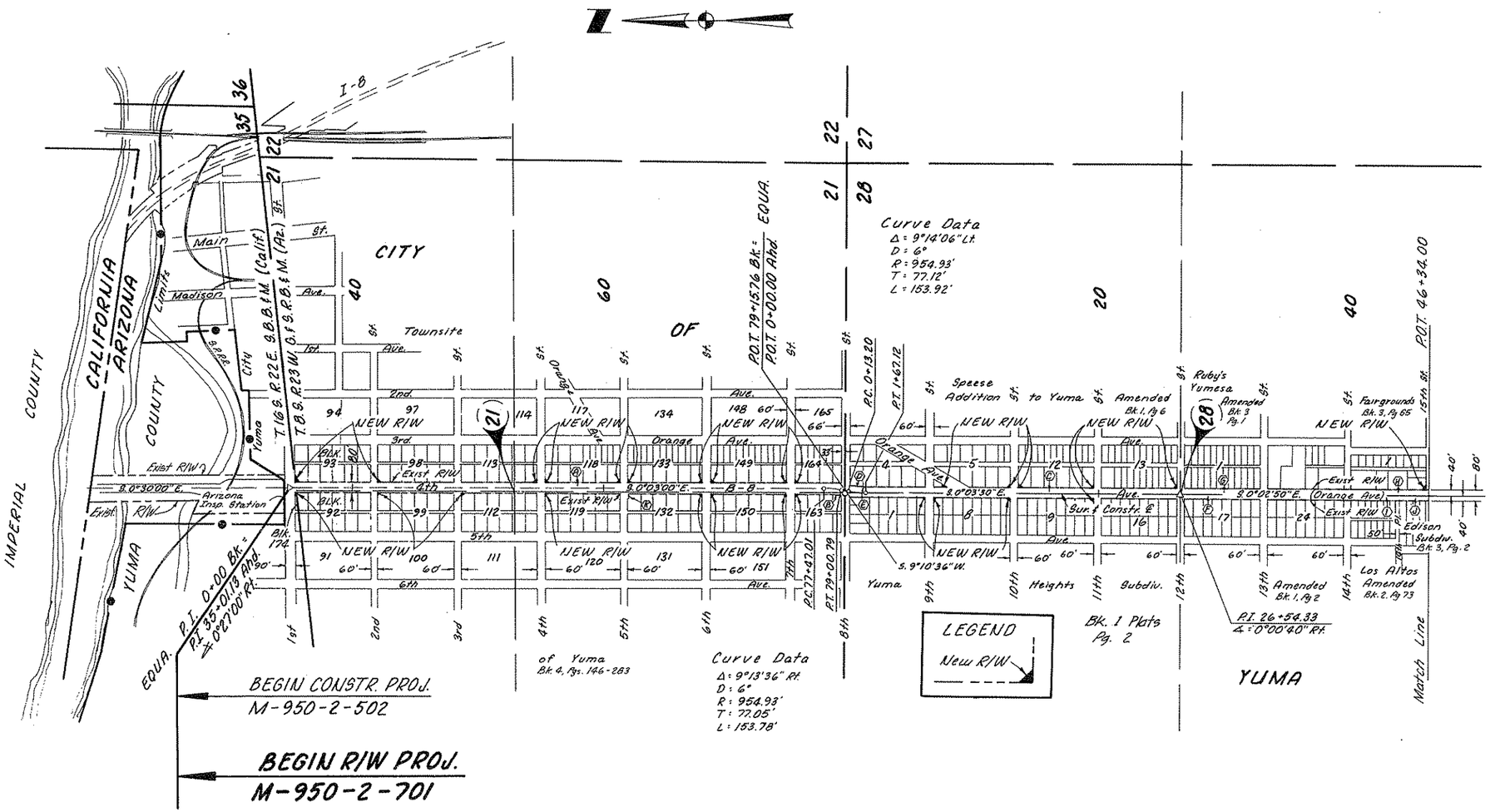

INDEX TO EXISTING R/W

INDEX	SUBDIVISION	SEC.	TWP.	R.	ACQUIRED FROM	TYPE	BOOK	PAGE	WIDTH	YEAR	PAR. NO.
Ⓐ	Townsite of Yuma	21 / 35*	8S / 16S	23W / 22E	Townsite of Yuma	Ded.	4	146-283	80'	1894	
Ⓑ	Lot 3 & 4, Blk. 163 City of Yuma	21	8S	23W	R. L. Tate, et ux	W.D.	Dkt. 6	322	Varies	1949	
Ⓒ	Speese Addition to Yuma Amended	28	8S	23W	Speese Addition to Yuma Amended	Ded.	1	6	40'	1905	
Ⓓ	Speese Addition to Yuma Amended	28	8S	23W	Marion Tongeland	W.D.	Dkt. 6	310	Varies	1949	
Ⓔ	Speese Addition to Yuma Amended	28	8S	23W	Clarence E. Osborn, et al	Q.C.D.	Dkt. 6	305-309	Varies	1949	
Ⓕ	Yuma Heights Subdivision Amended	28	8S	23W	Yuma Heights Subdivision Amended	Ded.	1	2	40'	1904	
Ⓖ	Pt. of SE¼	28	8S	23W	J. R. Loftus, et ux	Esmt.	77	438	40'	1936	
Ⓗ	Pt. of SW¼ SE¼	28	8S	23W	Continental Securities Co.	Esmt.	77	439	40'	1936	
Ⓘ	Los Altos Amended	28	8S	23W	Los Altos Amended	Ded.	2	73	40'	1937	
Ⓙ	Edison	28	8S	23W	Edison Subdivision	Ded.	3	2	40'	1945	
Ⓚ	Blk. 132 City of Yuma	21	8S	23W	Yuma School District No. 1	Esmt.	Dck. 359	339	6'	1963	

* San Bernardino Base & Meridian (California)

VICINITY MAP
Scale 1" = 500'

YUMA URBAN AREA
1st STREET-30th STREET
YUMA COUNTY

Click here for I 8 Index

REVISIONS				
C.O. No.	DATE	BY	DESCRIPTION	
9365	4-24-79	K.S.	Deleted New R/W at SE Cor. 18th St.	
5364	4-19-79	R.L.R.	Removed Constr. Proj. callouts at P.O.T. 53+	
"	"	"	75.20. Changed end constr. proj. at 144+12	
"	"	"	to M-950-2-502. (Bid)	
5411	7-10-79	P.Todd	Rev. New R/W Lt. Sta. 66+00.	
5466	10-26-79	M. Romo	Deleted New R/W at NW corner 20th Place & 4th Ave.	

PROJECT NO.	M-950-2-701
DRAWING NO.	D-14-T-354
SHEET NO.	7 OF 16
DRAWN BY	BOB O.
DATE COMP.	1-30-79
SCALE	1" = 500'

CHECKED BY. Rice Peter Jerry

HARD COPY 7735 T1

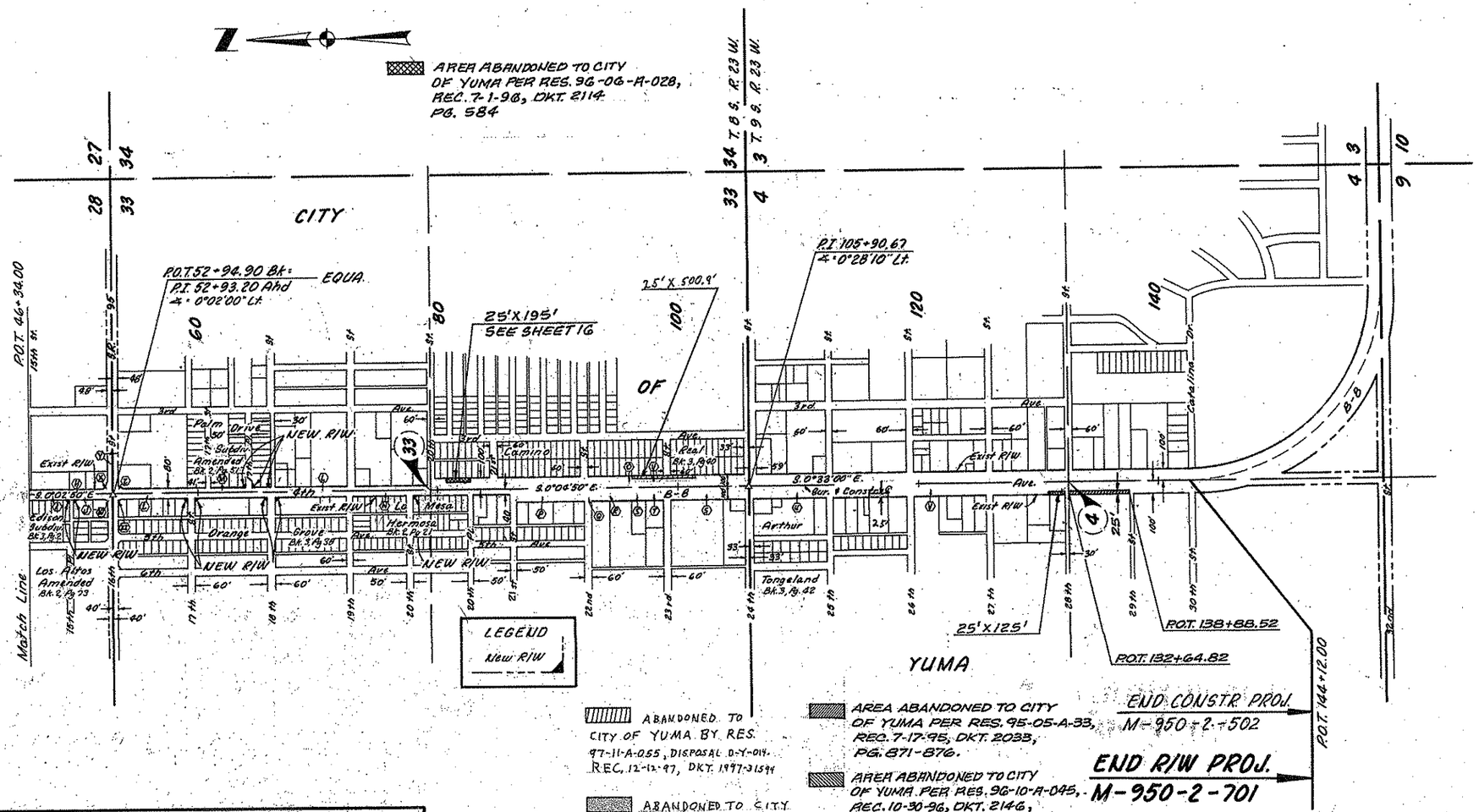

VICINITY MAP
Scale 1" = 500'

INDEX TO EXISTING R/W

INDEX	SUBDIVISION	SEC.	TWP.	R.	ACQUIRED FROM	TYPE	BOOK	PAGE	WIDTH	YEAR	PAR. NO.
(L)	City of Yuma	33	8 S	23W	Az. State Highway Commission	Res.	A.R.S.	28-1862	80'	1927	
(M)	Palm Drive Subdivision Amended	33	8 S	23W	Palm Drive Subdivision Amended	Esmt.	2	51	40'	1928	
(N)	La Mesa Hermosa Subdivision	33	8 S	23W	La Mesa Hermosa Subdivision	Esmt.	2	21	40'	1926	
(O)	Camino Real	33	8 S	23W	Camino Real	Fee	3	40	100'	1948	
(P)	Pt. of S½NE¼SW¼	33	8 S	23W	Jane C. Sanguinetti	Esmt.	Dkt. 41	545	100'	1951	
(Q)	Pt. of NE¼SE¼SW¼	33	8 S	23W	A. D. Broussard, et al	Q.C.D.	109	256	30'	1947	
(R)	Pt. of NE¼SE¼SW¼	33	8 S	23W	Yuma Development Co.	Esmt.	110	177	100'	1948	
(S)	Pt. of SE¼SW¼	33	8 S	23W	E. Francis Sanguinetti Jr. et al	Esmt.	Dkt. 41	543	100'	1951	
(T)	Pt. of SE¼NE¼SE¼SW¼	33	8 S	23W	Charles F. Trombley, et al	Esmt.	Dkt. 41	541	100'	1951	
(U)	Arthur Tongeland Subdivision	4	9 S	23W	Arthur Tongeland Subdivision	Esmt.	3	42	100'	1948	
(V)	Pt. of Sec. 33	33	8 S	23W	J. R. Loftus, et ux	Esmt.	88	312	100'	1940	
	Pt. of Sec. 4	4	9 S								

INDEX TO EXISTING R/W

INDEX	SUBDIVISION	SEC.	TWP.	R.	ACQUIRED FROM	TYPE	BOOK	PAGE	WIDTH	YEAR	PAR. NO.
(W)	Lot 62, Los Altos Amended	28	8 S	23W	Glen C. Curtis, et al	F.O.C.	Dkt. 615	214	Varies	1970	14-142
(X)	Pt. of SW¼SE¼	28	8 S	23W	Citizens Title & Trust, Trustee, No. 83	W.D.	Dkt. 719	709	Varies	1972	14-312
(Y)	Pt. of SW¼SW¼SE¼	28	8 S	23W	George I. Holmes, et al	Esmt.	Dkt. 7	206	48'	1949	
	Pt. of N½NW¼NW¼NE¼	33									
(Z)	Pt. of NW¼NW¼NE¼	33	8 S	23W	Alta Sue Holmes, et al	W.D.	Dkt. 788	766	Varies	1974	14-311
(Z2)	Pt. of E½NE¼NW¼	33	8 S	23W	Ruby E. Holmes	W.D.	Dkt. 523	518	Varies	1963	14-141

BRUNING A-512

YUMA URBAN AREA
1st STREET – 30th STREET
YUMA COUNTY

Click here for I 8 Index

REVISIONS				PROJECT NO.	M-950-2-701
C.O. No.	DATE	BY	DESCRIPTION	DRAWING NO.	D-14-T-354
5320	2-28-79	P.Todd	Rev. Rec. Data in Blk. 174 to Bk. 1 of Plats, Pg. 55.	SHEET NO.	8 OF 16
5364	4-18-79	R.L.R.	Called out sur. mon. Added Beg. Constr.	DRAWN BY	BOB O.
"	"	"	Proj. 502. Bid Set (502)	DATE COMP.	1-30-79
N/A	6-2-14	TSS	ADDED RES. 2010-07-A-062	SCALE	1" = 20'
N/A	10-19-15	TSS	ADDED RES. 2015-09-A-042, PM-15-065		

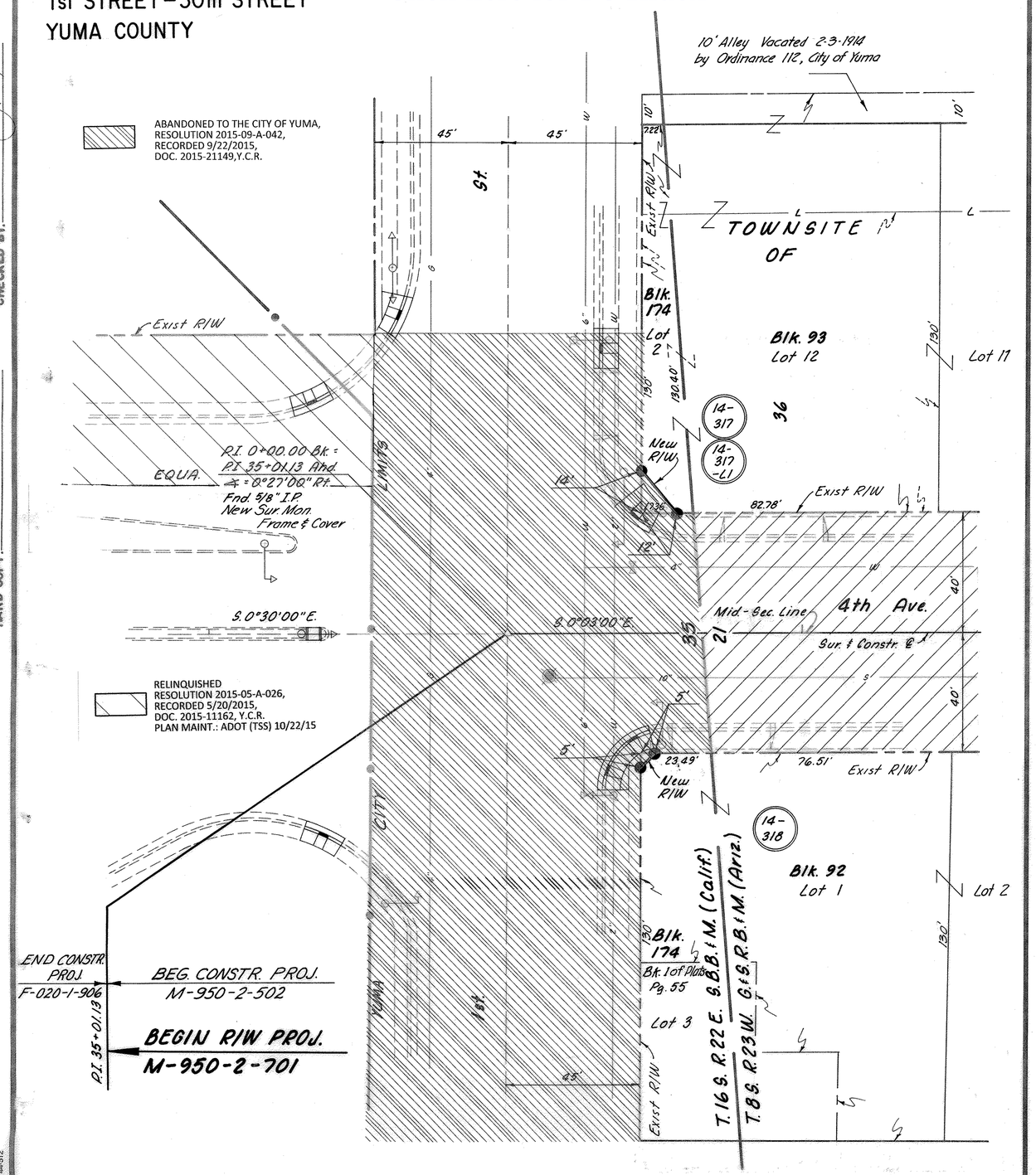

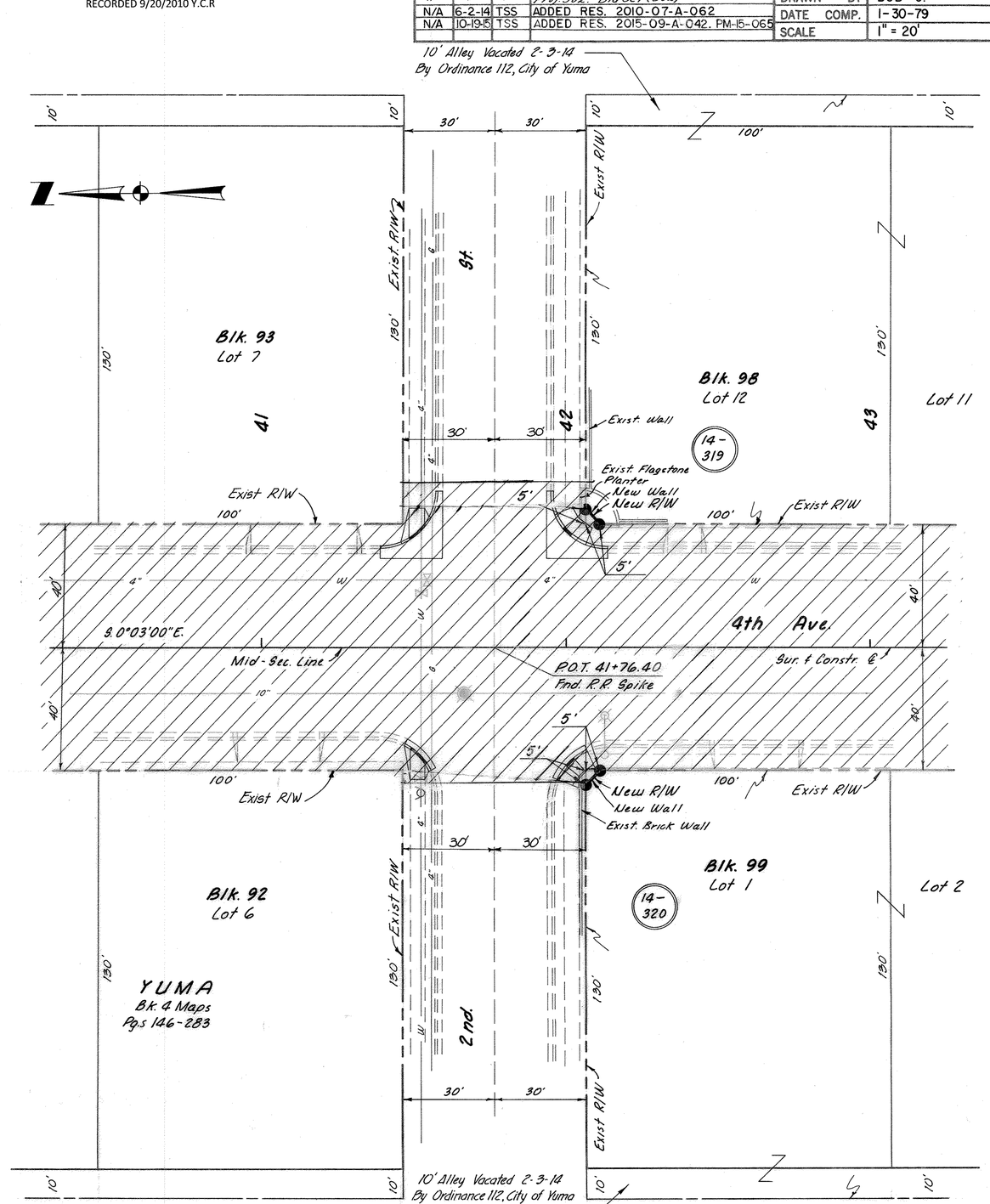

CHECKED BY. Yuma Area Team

HARD COPY 7735 T1

BRUNING 44-512

YUMA URBAN AREA
1st STREET-30th STREET
YUMA COUNTY

Click here for I 8 Index

REVISIONS					
C.O. No.	DATE	BY	DESCRIPTION	PROJECT NO.	M-950-2-701
5365	4-22-79	KG	Deleted New R/W at 54+60± and 14-323.	DRAWING NO.	D-14-T-354
5364	4-10-79	R.L.R.	Called out Exist. R/W. (Bid 302)	SHEET NO.	9 OF 16
5417	8-3-79	J.Mc.	Deleted Parcel 14-324-L1	DRAWN BY	BOB O.
				DATE COMP.	1-30-79
				SCALE	1" = 20'

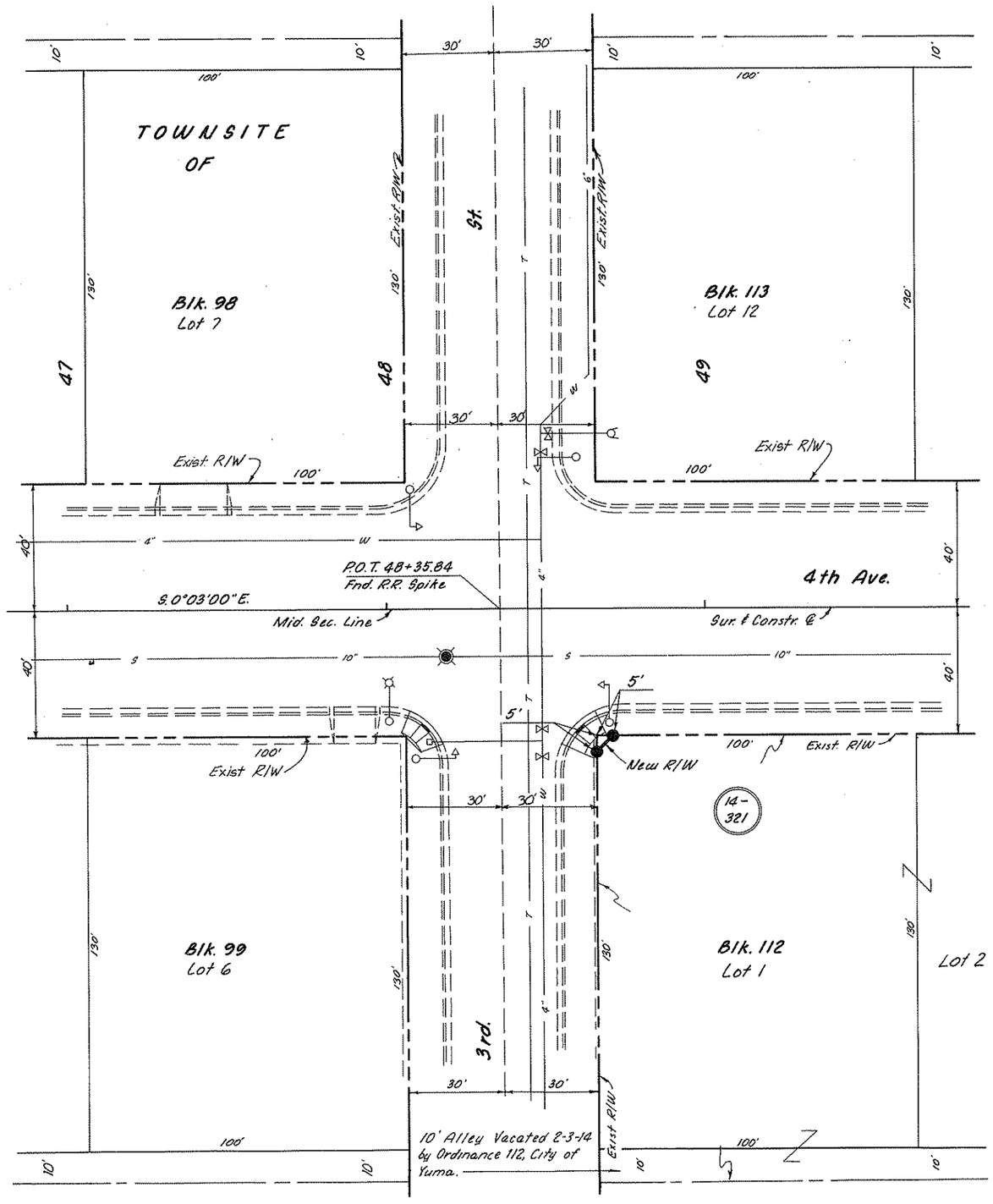

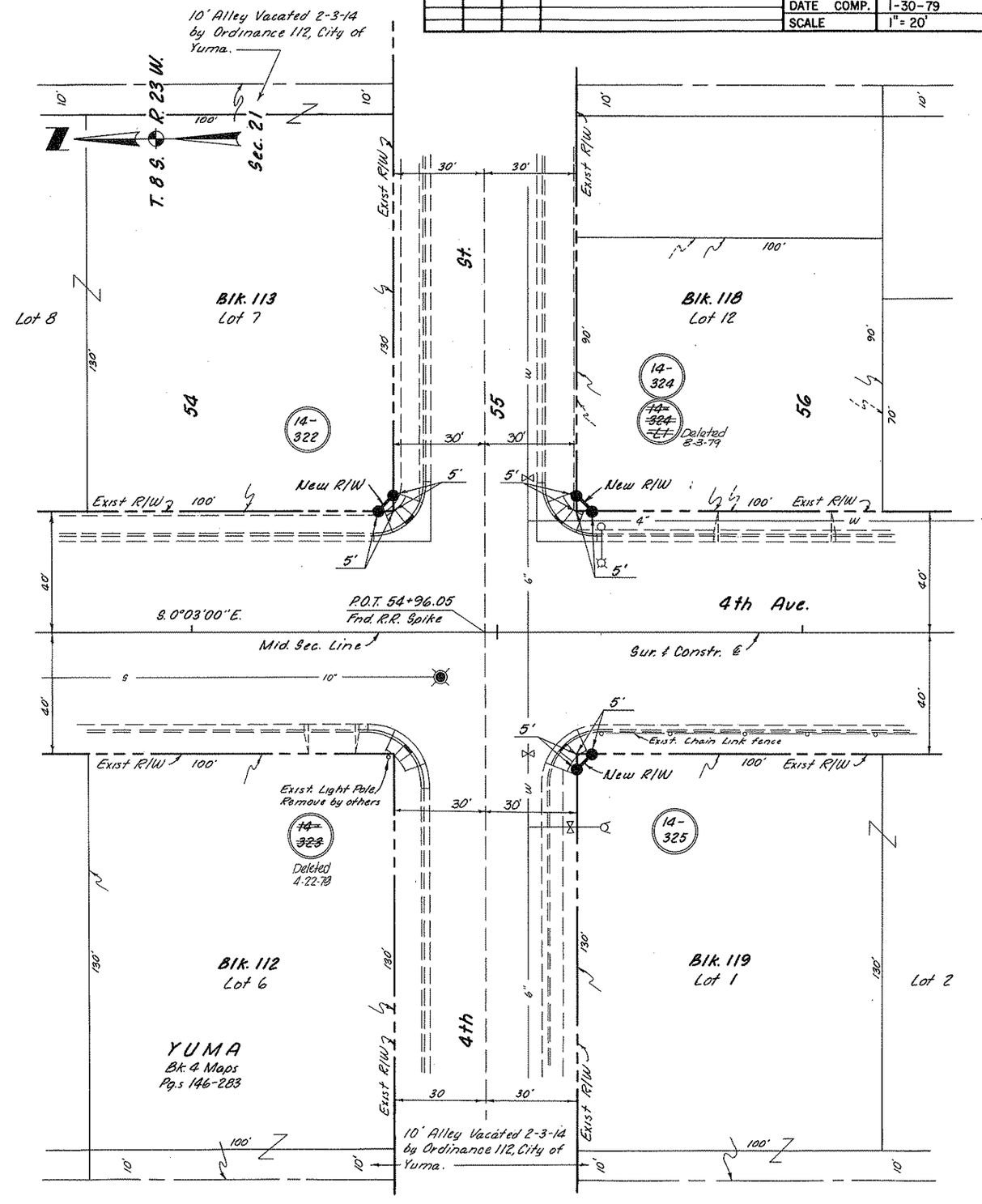

YUMA URBAN AREA
1st STREET–30th STREET
YUMA COUNTY

Click here for I 8 Index

REVISIONS				
C.O. No.	DATE	BY	DESCRIPTION	
5364	4-18-79	R.L.R.	Calledout Exist. R/W on 5th Str. (Bid 502)	

PROJECT NO.	M-950-2-701
DRAWING NO.	D-14-T-354
SHEET NO.	10 OF 16
DRAWN BY	BOB O.
DATE COMP.	1-30-79
SCALE	1" = 20'

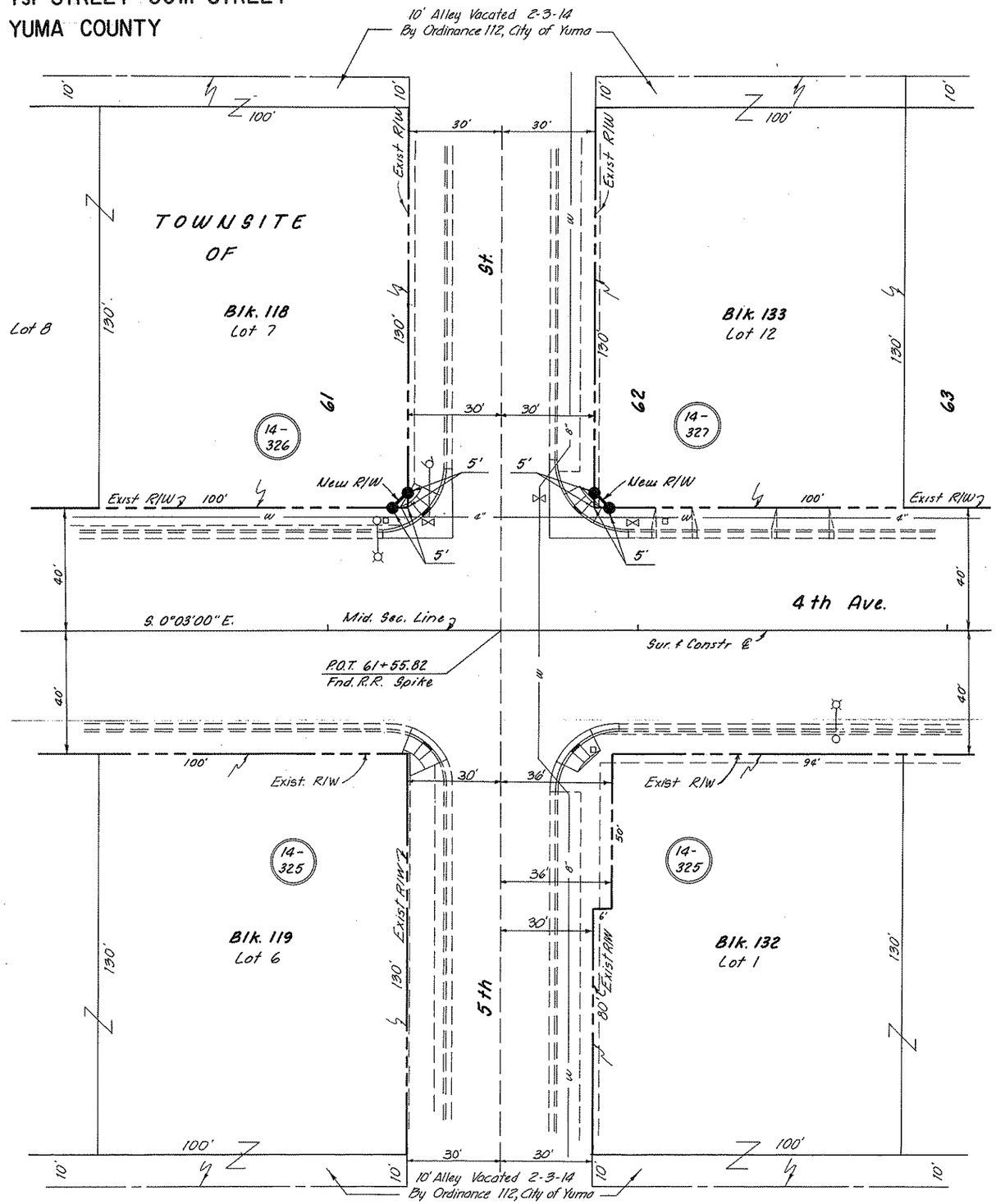

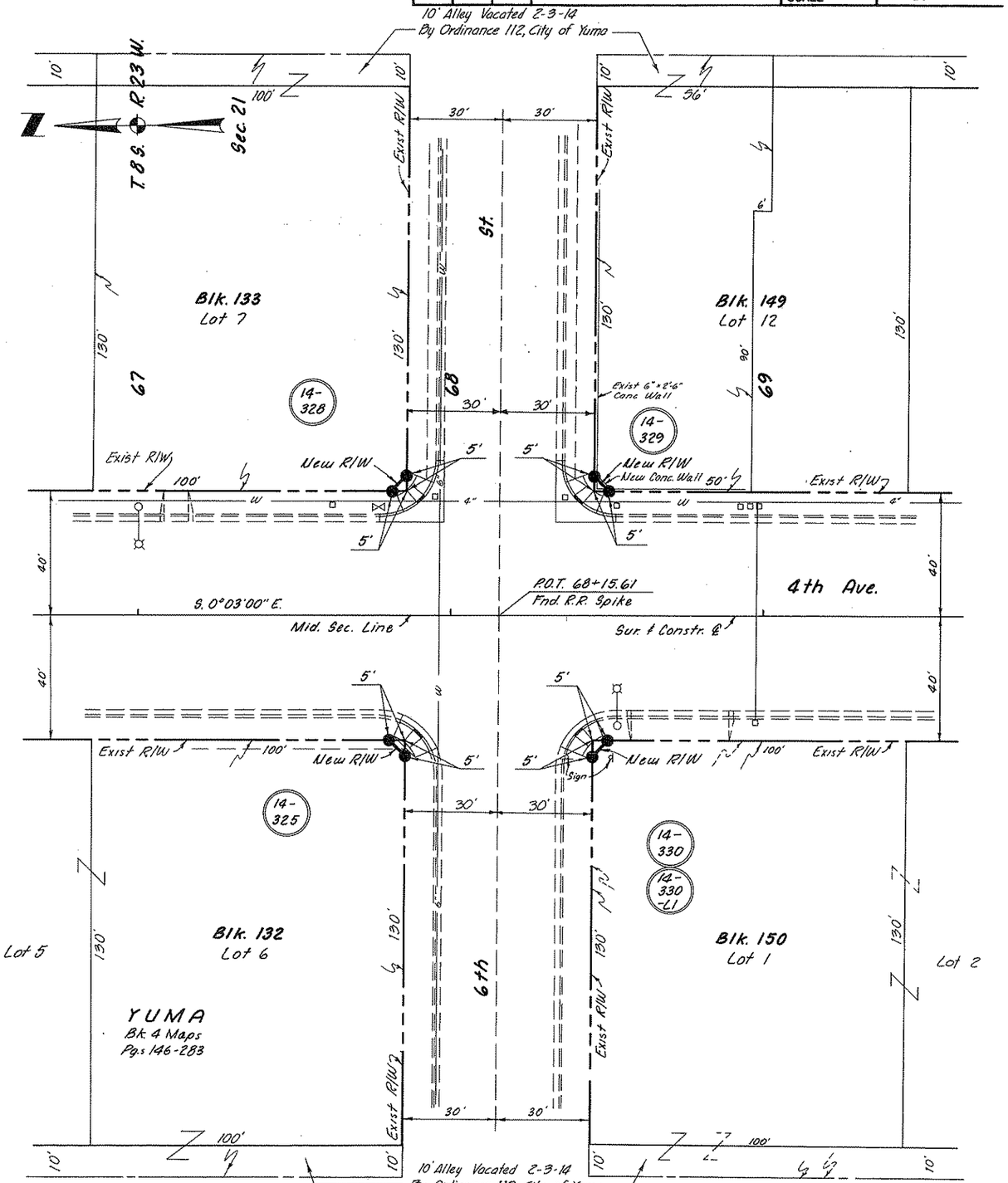

YUMA URBAN AREA
1st STREET-30th STREET
YUMA COUNTY

Click here for I 8 Index

REVISIONS					
C.O. No.	DATE	BY	DESCRIPTION	PROJECT NO.	M-950-2-701
5365	4-22-79	K.S.	Revd New R/W for Par. 14-332 Added	DRAWING NO.	D-14-T-354
"	"	"	detail "D"	SHEET NO.	11 OF 16
5364	4-18-79	R.L.R.	Called out Blk 4 to Speese Addn. & exist	DRAWN BY	BOB O.
"	"	"	R/W. (Bid 502)	DATE COMP.	1-30-79
				SCALE	SEE BELOW

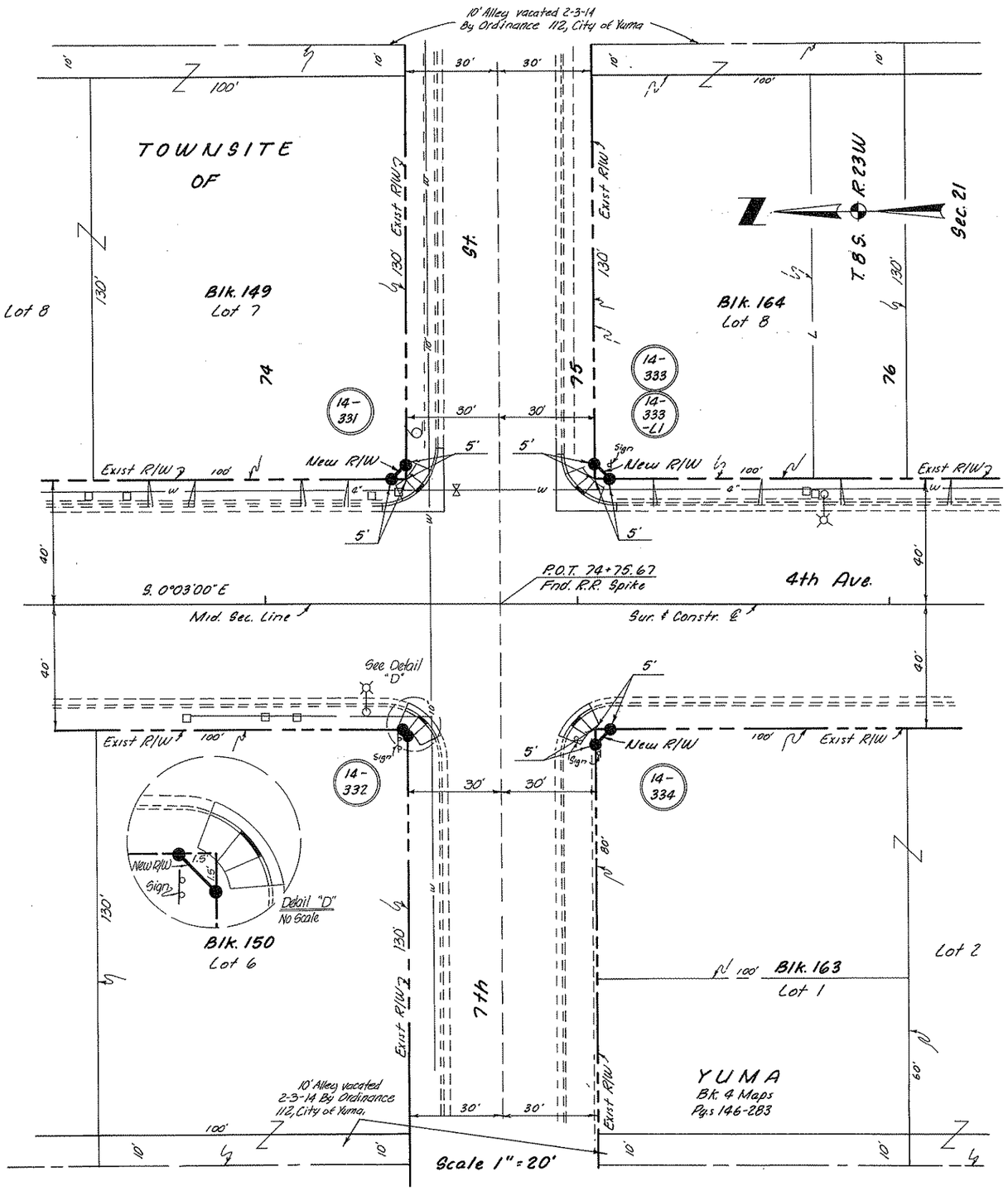

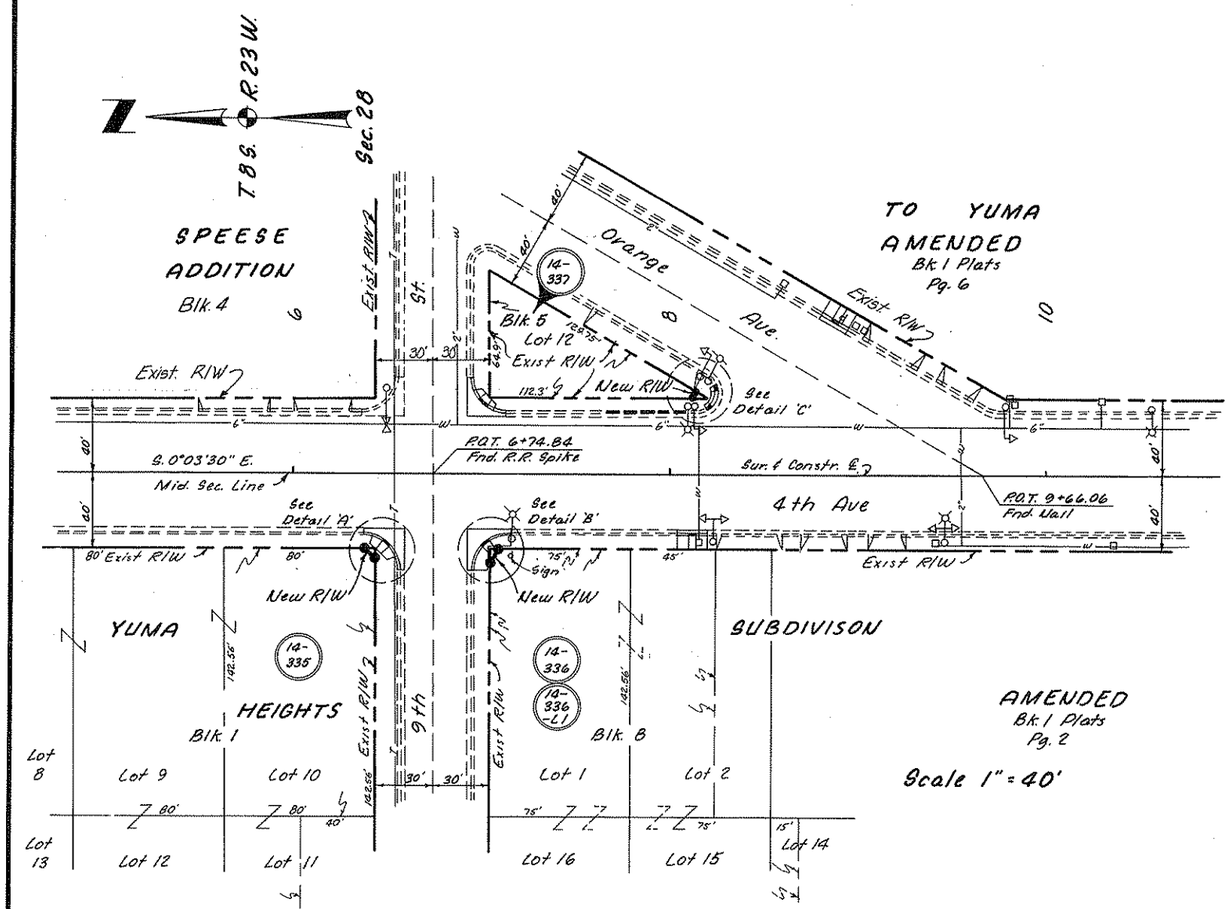

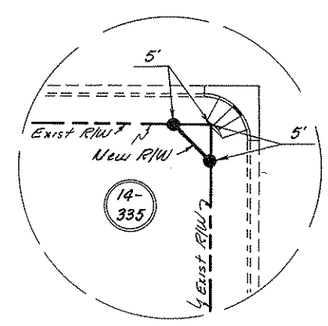

Detail 'A'

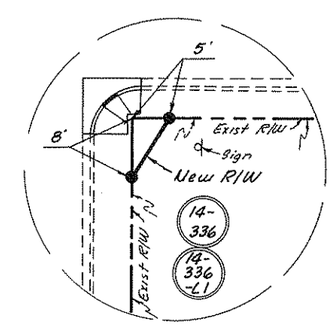

Detail 'B'

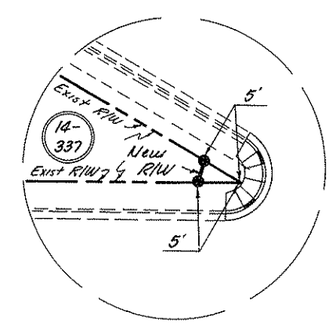

Detail 'C'

No Scale

HARD COPY
CHECKED BY
BRUNING 44-512

YUMA URBAN AREA
1st STREET-30th STREET
YUMA COUNTY

Click here for I 8 Index

REVISIONS				
C.O. No.	DATE	BY	DESCRIPTION	
5365	4-24-79	KG	Deleted New R/W at 13+65± and 14-341.	
5364	4-18-79	R.L.A.	Called out Exist. R/W (Bid 502)	
5469	10-26-79	M. Romo	Delete Anchor Bars Lot 7-10, 8-9, 10-9, Block 8	

PROJECT NO.	M-950-2-701
DRAWING NO.	D-14-T-354
SHEET NO.	12 OF 16
DRAWN BY	BOB O.
DATE COMP.	1-30-79
SCALE	1" = 20'

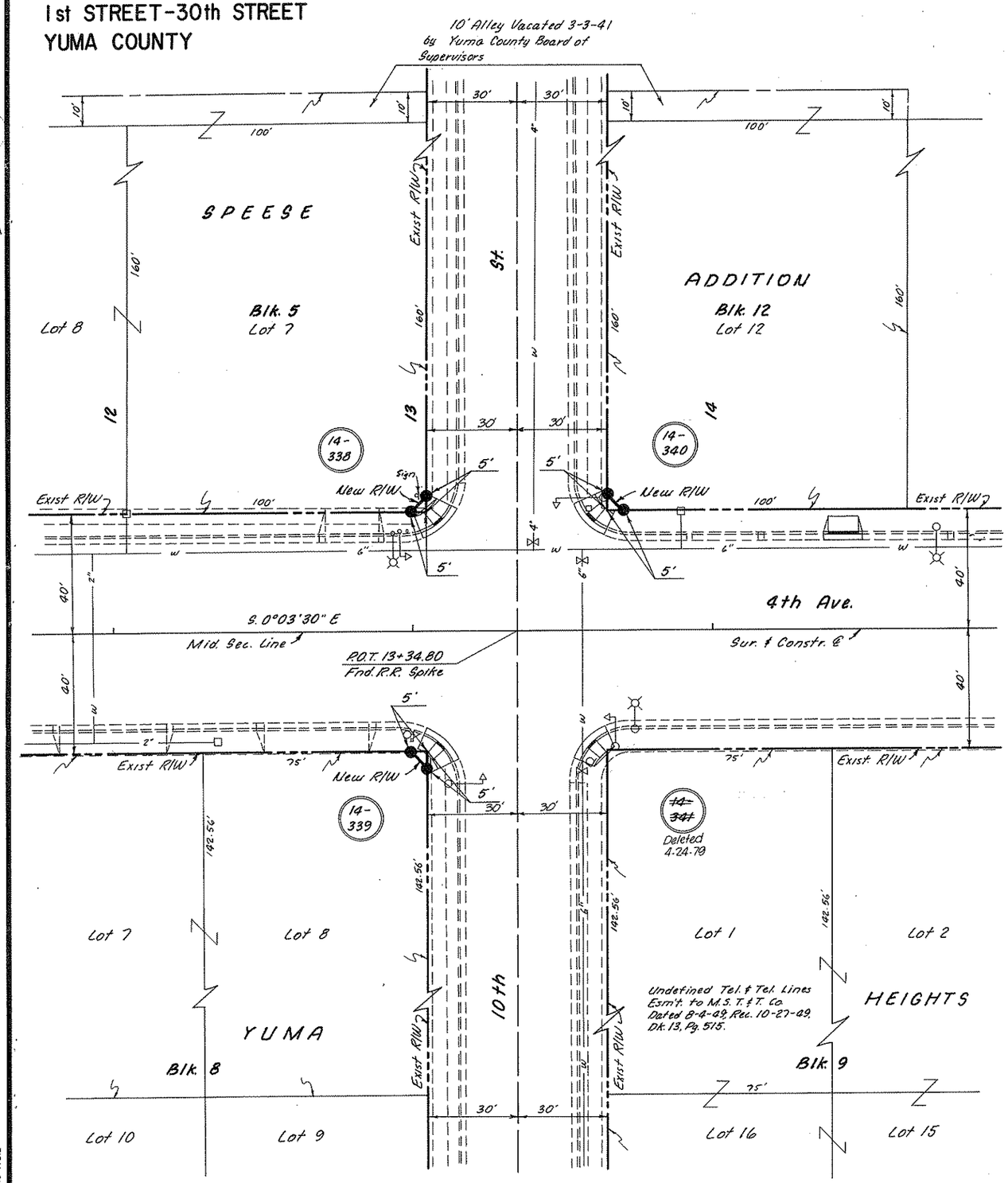

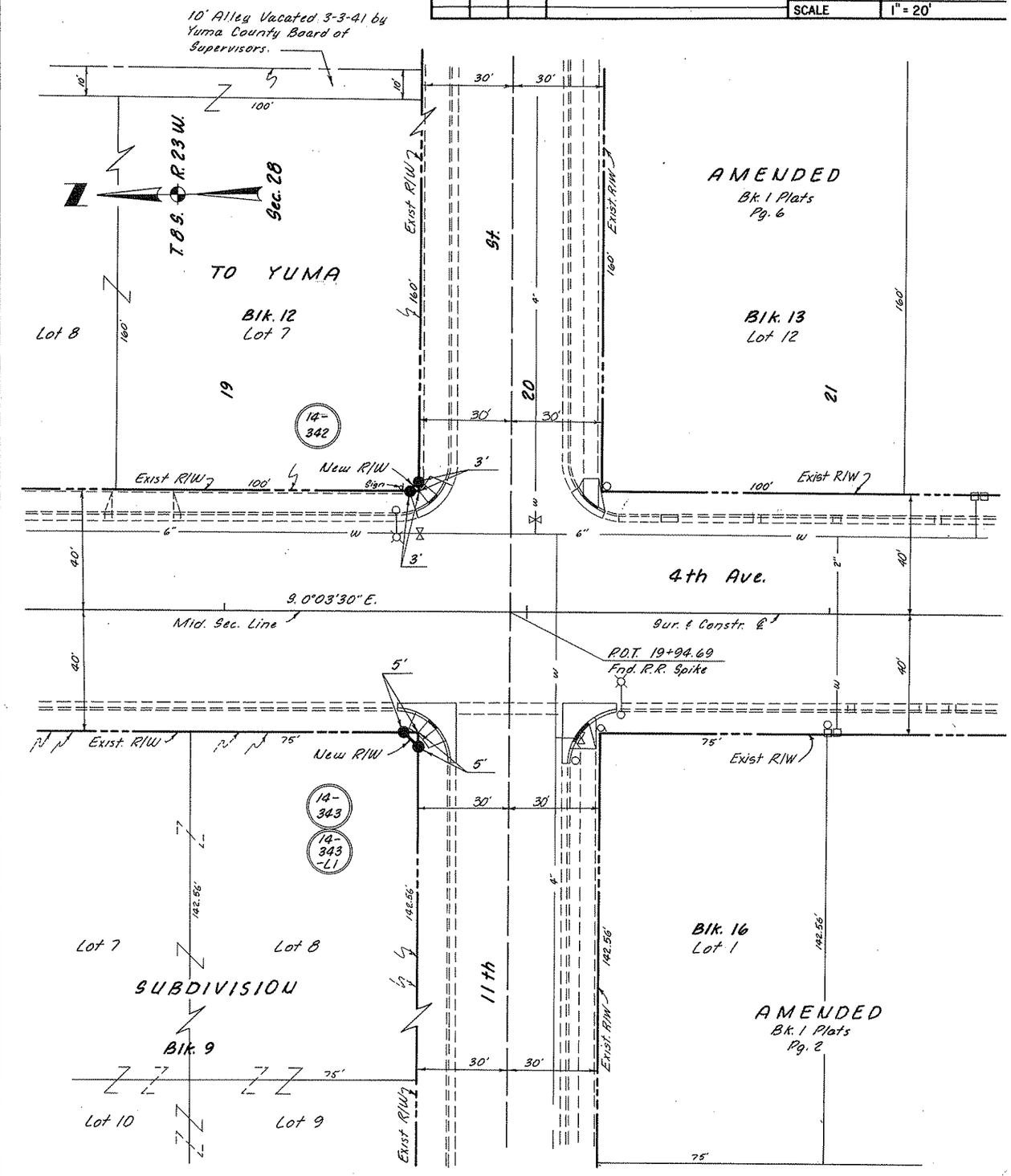

YUMA URBAN AREA
1st STREET-30th STREET
YUMA COUNTY

REVISIONS				PROJECT NO.	M-950-2-701
C.O. No.	DATE	BY	DESCRIPTION	DRAWING NO.	D-14-T-354
5364	4-18-79	R.L.R.	Called out P.C.'s south 12th. Str.; M.P. 2 & 16th	SHEET NO.	13 OF 16
"	"	"	Str. to equo. at P.I. 52+94.90. (Bid 502)	DRAWN BY	BOB O.
				DATE COMP.	1-30-79
				SCALE	1" = 20'

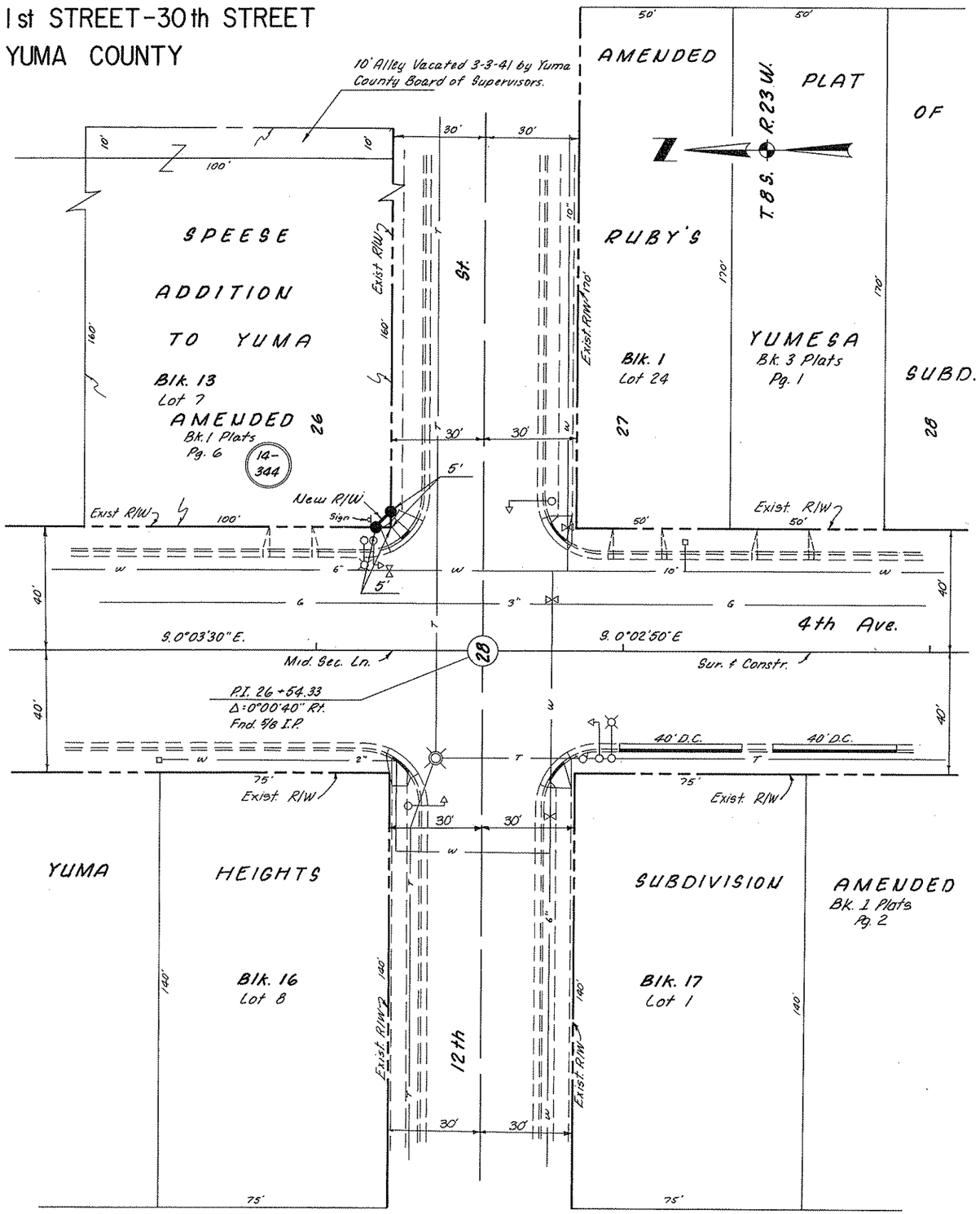

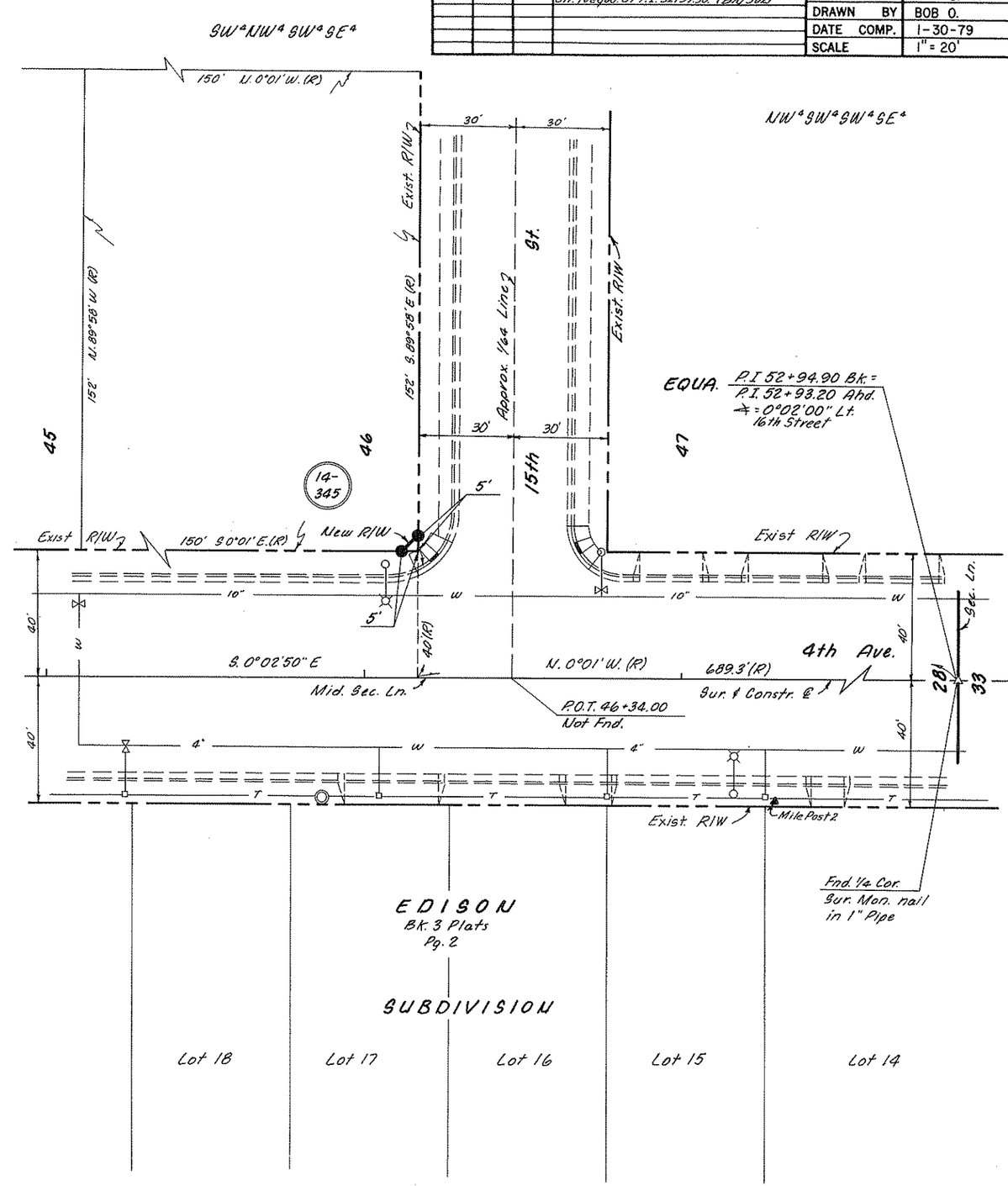

Click here for I 8 Index

YUMA URBAN AREA
1st STREET-30th STREET
YUMA COUNTY

Click here for I 8 Index

REVISIONS					
C.O. No.	DATE	BY	DESCRIPTION	PROJECT NO.	M-950-2-701
				DRAWING NO.	D-14-T-354
				SHEET NO.	14 OF 16
				DRAWN BY	BOB O.
				DATE COMP.	1-30-79
				SCALE	1" = 20'

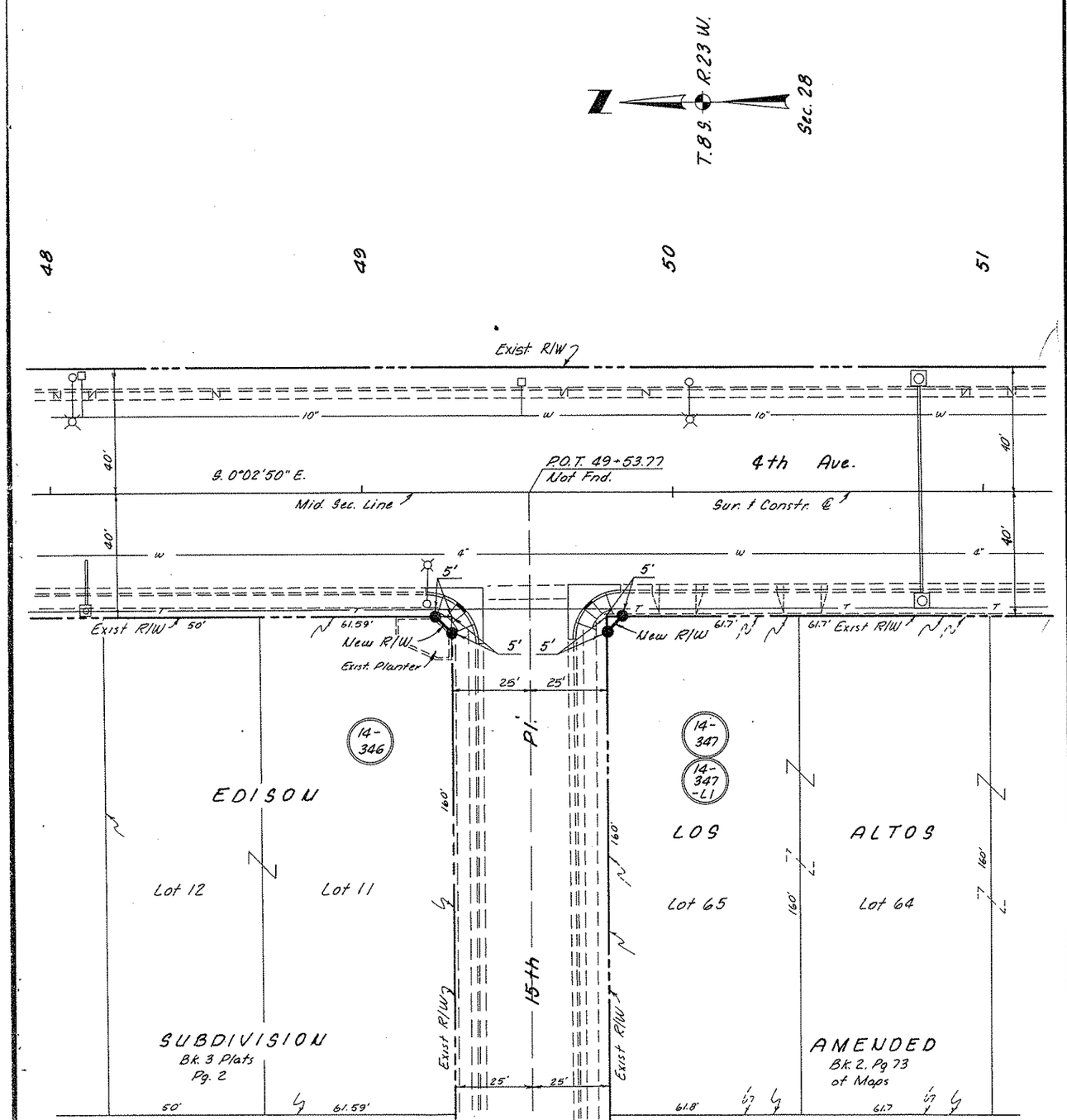

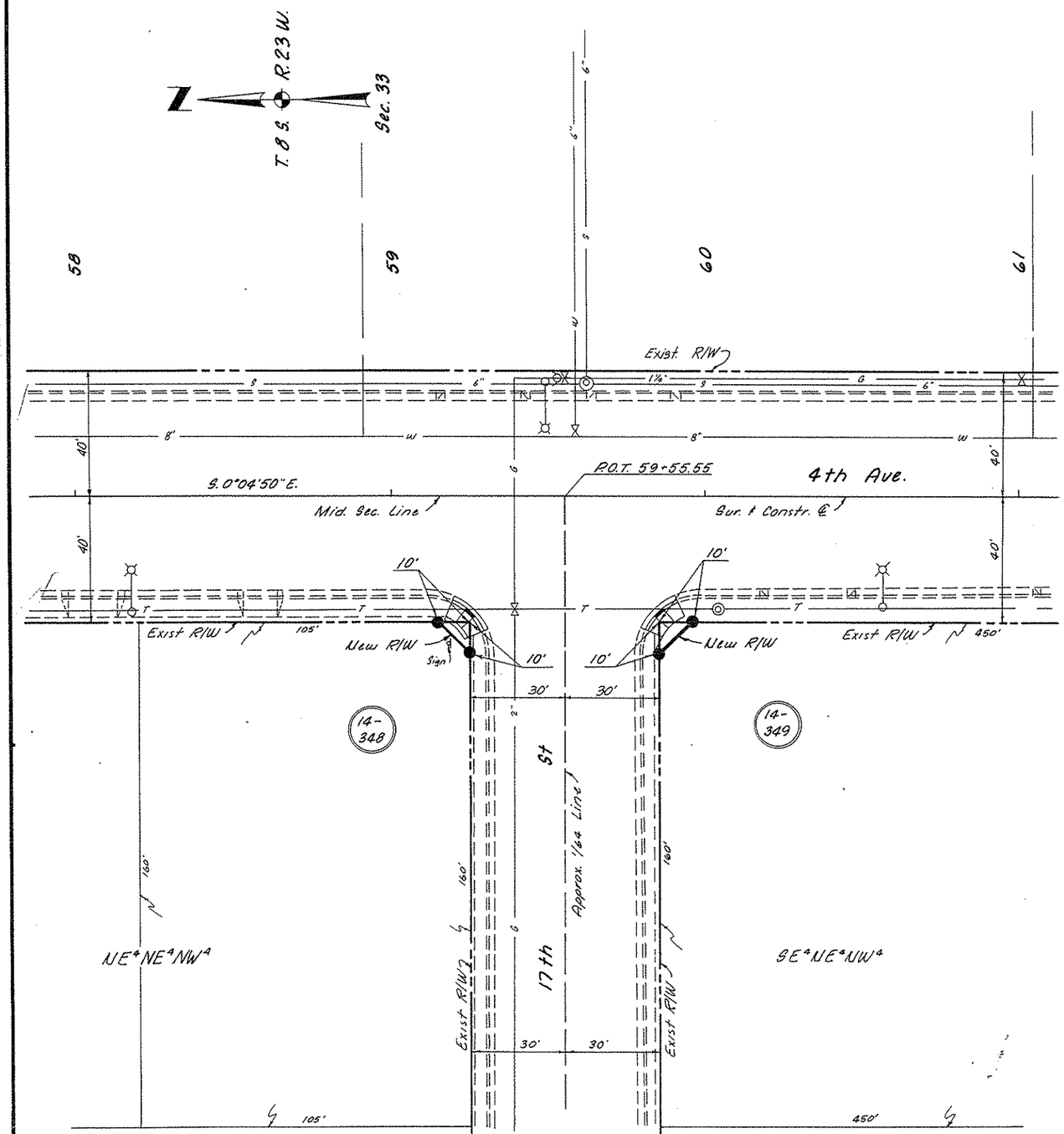

YUMA URBAN AREA
1st STREET - 30th STREET
YUMA COUNTY

REVISIONS			
C.O. No.	DATE	BY	DESCRIPTION
5320	2-28-79	P.Todd	Rev. 150' Dimen. to 100' on W. Line Parcel 14-353.
5365	4-24-79	KS	Deleted New R/W Lt. 66+50± and 14-353.
5411	7-10-79	P.Todd	Revised New R/W left Sta. 66+00.

PROJECT NO.	M-950-2-701
DRAWING NO.	D-14-T-354
SHEET NO.	15 OF 16
DRAWN BY	BOB O.
DATE COMP.	1-30-79
SCALE	1" = 20'

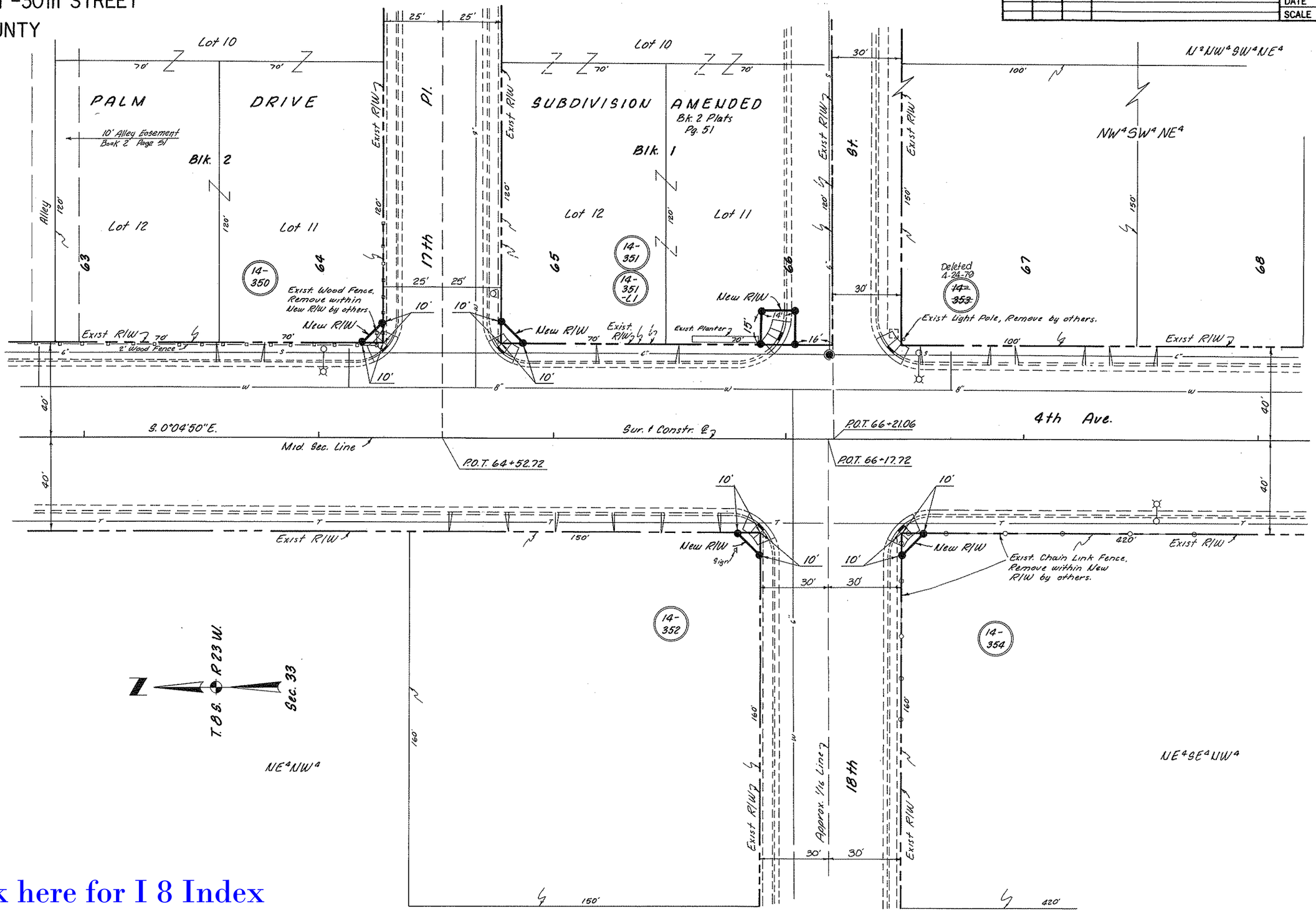

Click here for I 8 Index

CHECKED BY.

HARD COPY.

BRUNING 44-512

YUMA URBAN AREA
1st STREET - 30th STREET
YUMA COUNTY

Click here for I 8 Index

REVISIONS			
C.O. No.	DATE	BY	DESCRIPTION
5364	4-18-79	R.L.A.	Called out exist. R/W where needed (Bid 502)
"	"	"	Changed Constr. Proj. to 502 at 144+12.00
5468	10-26-79	M. Romo	Deleted Parcel No. 14-356 & 14-356-L1

PROJECT NO.	M-950-2-701
DRAWING NO.	D-14-T-354
SHEET NO.	16 OF 16
DRAWN BY	BOB O.
DATE COMP.	1-30-79
SCALE	1" = 20'

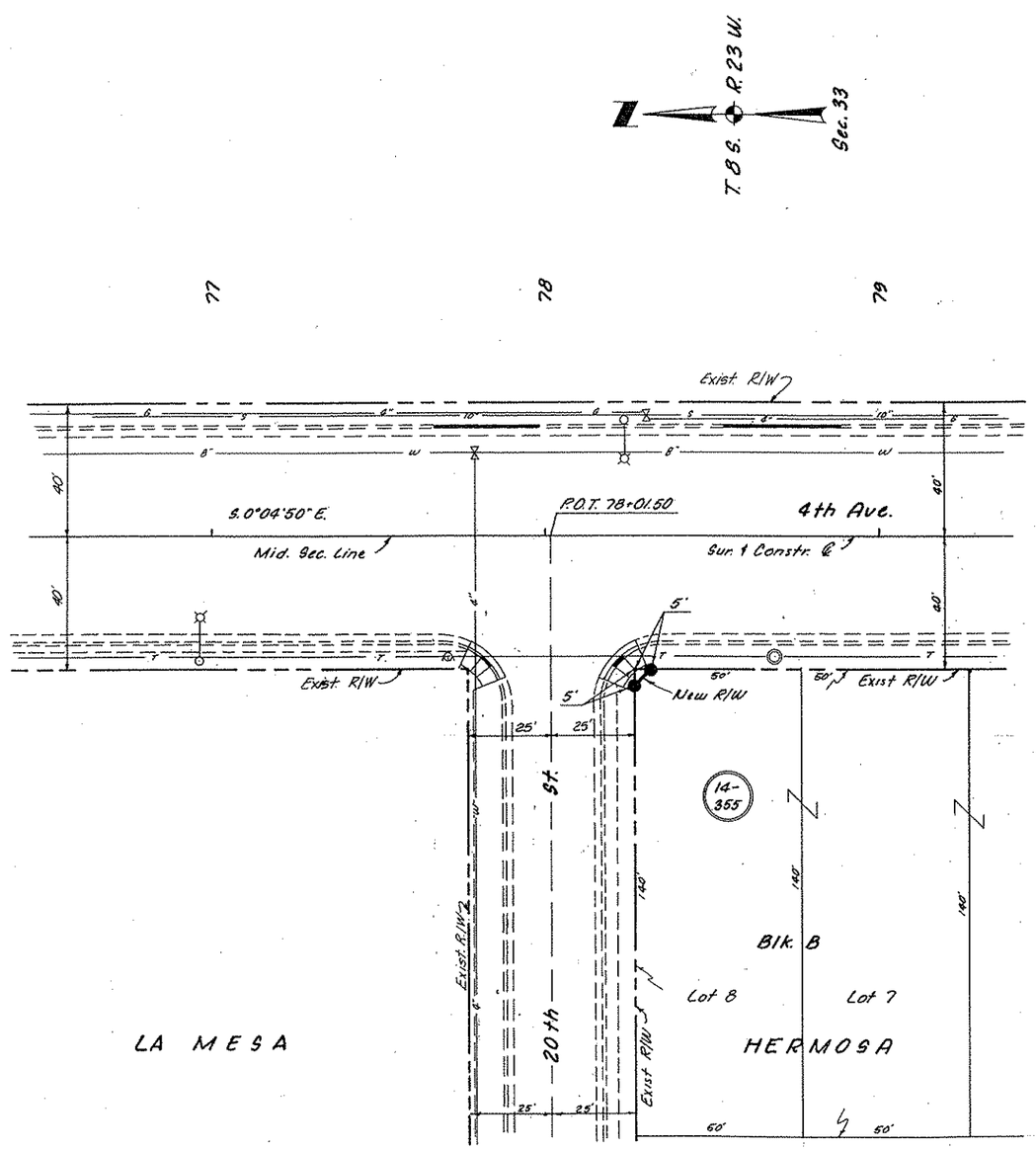

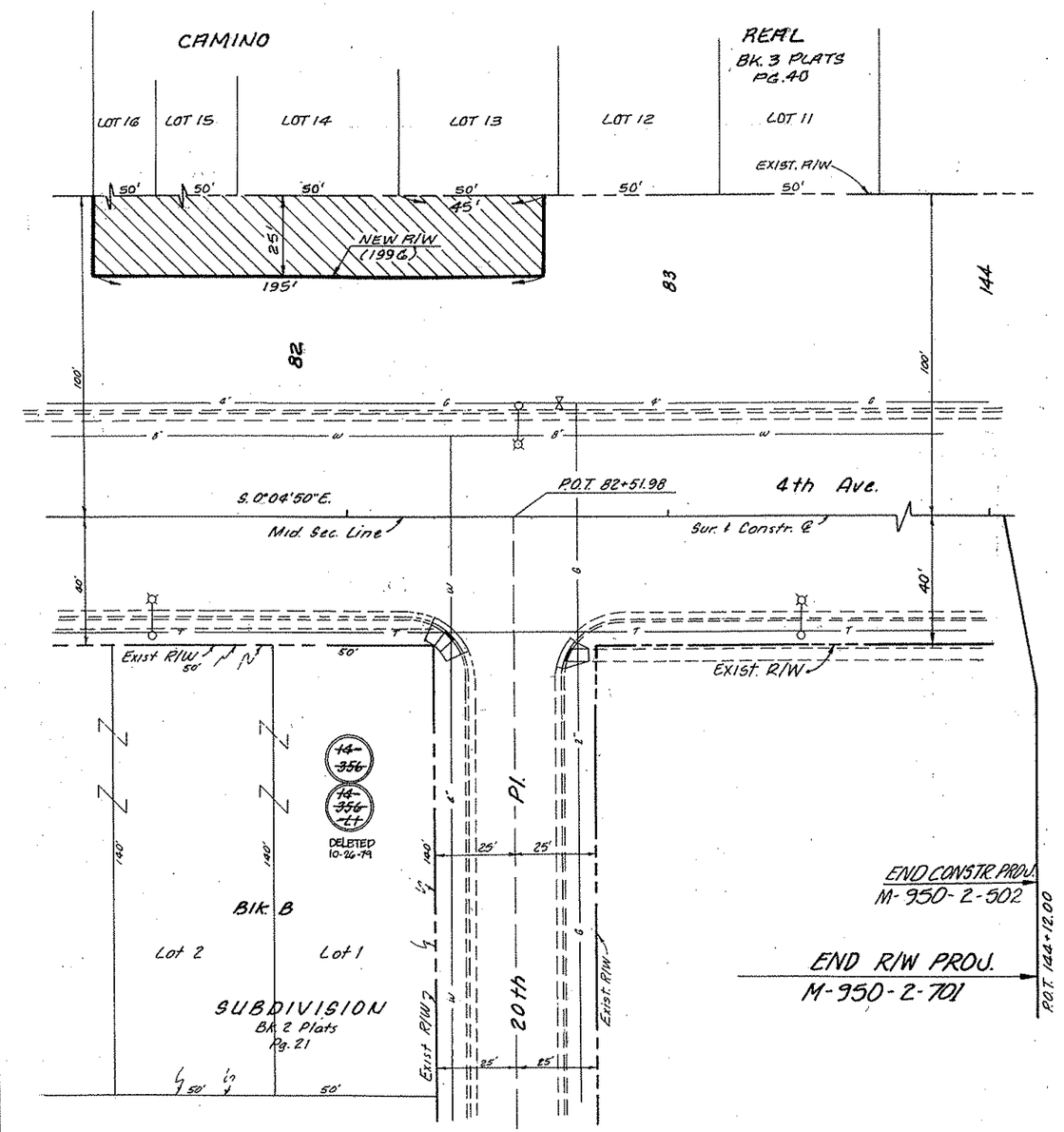

CHECKED BY.
HARD COPY.
BRUNING 44-512