RESULTS OF SURVEY

Click here for I-10 Index

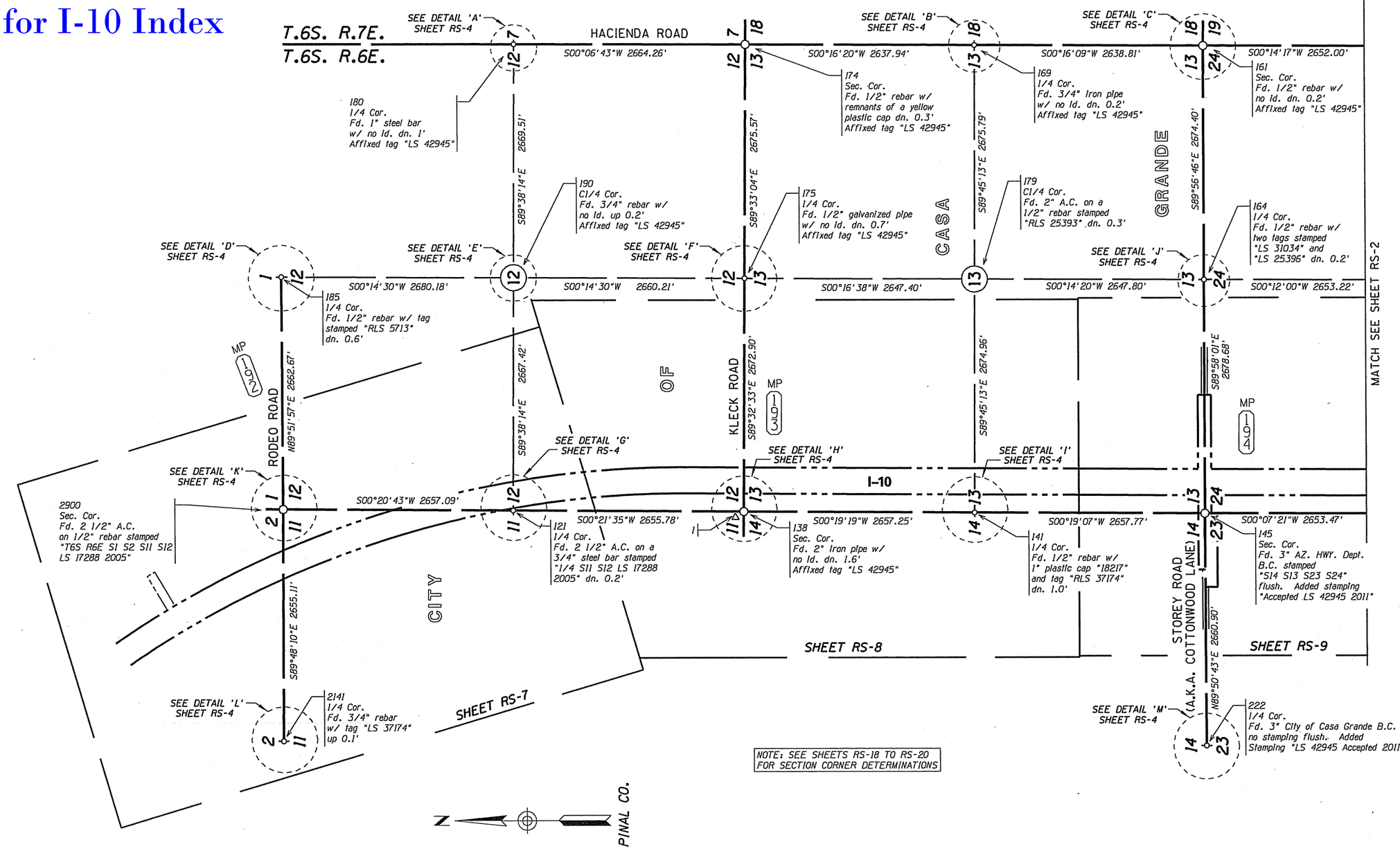

NOTE: SEE SHEETS RS-18 TO RS-20 FOR SECTION CORNER DETERMINATIONS

SECTIONAL CONTROL SHEET

0 300 600
Scale

010RW188_RS-01.DGN

LEGEND

302 Set Monument
300 Found Monument
S.F.N.F. Search For Not found
301 Calculated position
Existing ADOT R/W monument

CHANGE ORDER REVISIONS			
C.O. NO.	DATE	BY	DESCRIPTION OF REVISIONS

DRAWING NO.	D-11-T-487
SURVEY	Oct.-Dec. 2009
DRAWN/DATE	MGB Oct. 2010
ADOT REVIEW	S. McLain
ROUTE NO.:	I-10

RBF CONSULTING — PLANNING • DESIGN • CONSTRUCTION
16605 NORTH 28TH AVENUE, SUITE 100
PHOENIX, ARIZONA 85032-2602
602.487.2200 • FAX 602.487.2201
www.RBF.com

ARIZONA DEPARTMENT OF TRANSPORTATION
INTERMODAL TRANSPORTATION DIVISION
RIGHT OF WAY PLANS SECTION

HIGHWAY NAME: PHOENIX - CASA GRANDE
FEDERAL AID NO.: UNASSIGNED
PROJECT NO.: 010 PN 188 H7585 01R
LOCATION: Val Vista Rd. to Junction I-8

REGISTERED LAND SURVEYOR CERTIFICATE NO. 42945 CHAD E. WOOLGAR 6/8/12 ARIZONA, U.S.A. Expires 6/30/14

SHEET RS-1

6/8/2012 11:30:25 AM H:\PDATA\45104363\CADD\MAPPING\ROS\010RW188_RS-01.DGN

RESULTS OF SURVEY

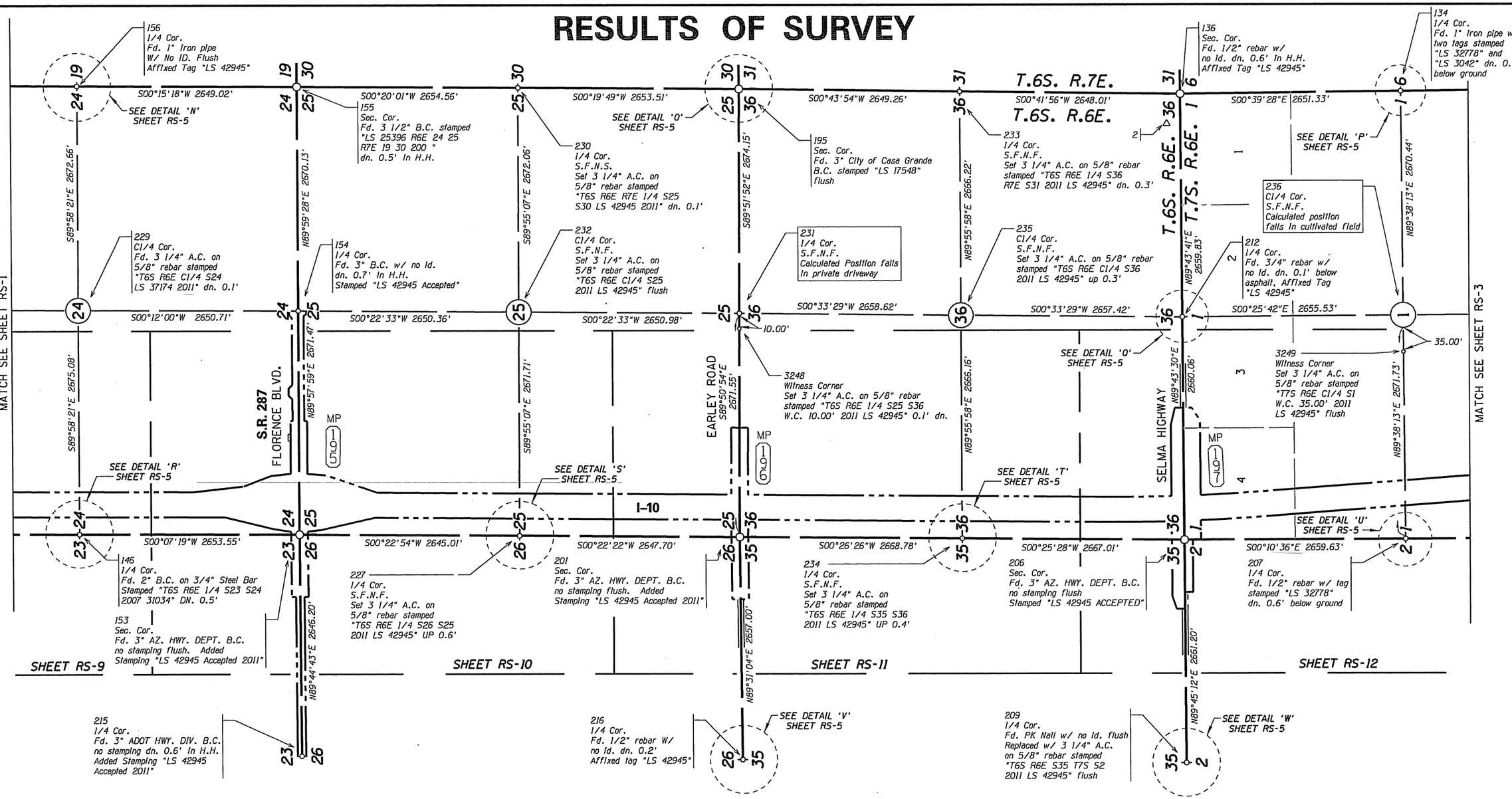

Click here for I-10 Index

NOTE: SEE SHEETS RS-18 TO RS-20 FOR SECTION CORNER DETERMINATIONS

SECTIONAL CONTROL SHEET

0 300 600
Scale

010RW188_RS-02.DGN

LEGEND

302 Set Monument
300 Found Monument
S.F.N.F. Search For Not found
301 Calculated position
Existing ADOT R/W monument

PINAL CO.

CHANGE ORDER REVISIONS			
C.O. NO.	DATE	BY	DESCRIPTION OF REVISIONS

DRAWING NO.	D-11-T-487
SURVEY	Oct.-Dec. 2009
DRAWN/DATE	MGB Oct. 2010
ADOT REVIEW	S. McLain
ROUTE NO.:	I-10
LOCATION:	Val Vista Rd. to Junction I-8

RBF CONSULTING
PLANNING • DESIGN • CONSTRUCTION
15605 NORTH 28TH AVENUE, SUITE 100
PHOENIX, ARIZONA 85032-2002
602.467.2200 • FAX 602.467.2201
www.RBF.com

ARIZONA DEPARTMENT OF TRANSPORTATION
INTERMODAL TRANSPORTATION DIVISION
RIGHT OF WAY PLANS SECTION

HIGHWAY NAME: PHOENIX - CASA GRANDE
FEDERAL AID NO.: UNASSIGNED
PROJECT NO.: 010 PN 188 H7585 01R

Chad E. Woolgar
REGISTERED LAND SURVEYOR
CERTIFICATE NO. 42945
CHAD E. WOOLGAR
6/8/12
ARIZONA, U.S.A.
Expires 6/30/14

SHEET RS-2

6/8/2012 11:36:03 AM H:\PDATA\15104363\CADD\MAPPING\RDS\010RW188_RS-02.DGN

RESULTS OF SURVEY

Click here for I-10 Index

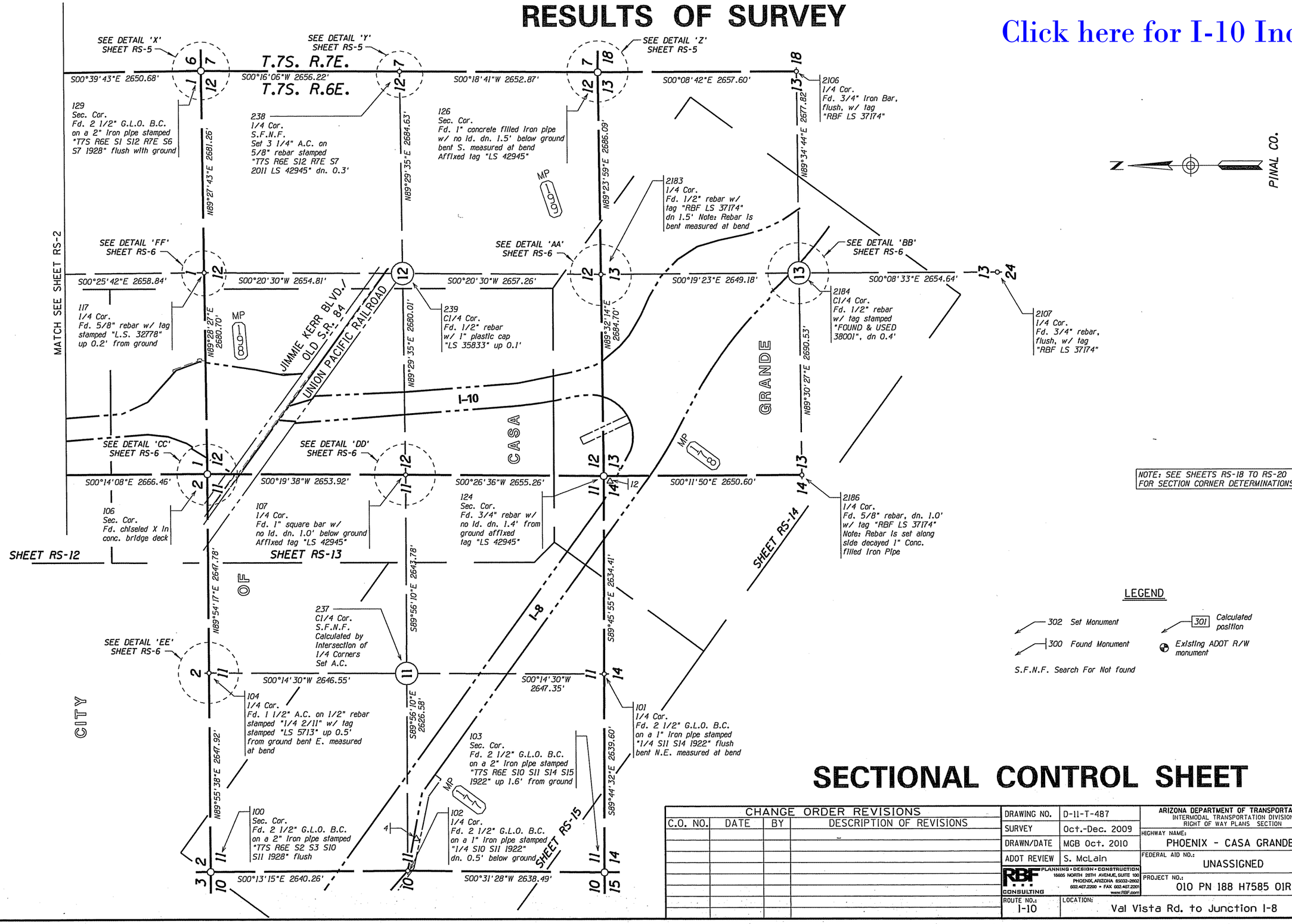

SECTIONAL CONTROL SHEET

0 300 600
Scale

010RW188_RS-03.DGN

CHANGE ORDER REVISIONS			
C.O. NO.	DATE	BY	DESCRIPTION OF REVISIONS
			-

DRAWING NO.	D-11-T-487
SURVEY	Oct.-Dec. 2009
DRAWN/DATE	MGB Oct. 2010
ADOT REVIEW	S. McLain

RBF CONSULTING — PLANNING • DESIGN • CONSTRUCTION
16605 NORTH 28TH AVENUE, SUITE 100
PHOENIX, ARIZONA 85032-2002
602.467.2200 • FAX 602.467.2201
www.RBF.com

ARIZONA DEPARTMENT OF TRANSPORTATION
INTERMODAL TRANSPORTATION DIVISION
RIGHT OF WAY PLANS SECTION

HIGHWAY NAME: PHOENIX - CASA GRANDE
FEDERAL AID NO.: UNASSIGNED
PROJECT NO.: 010 PN 188 H7585 01R

ROUTE NO.: I-10
LOCATION: Val Vista Rd. to Junction I-8

REGISTERED LAND SURVEYOR CERTIFICATE NO. 42945 CHAD E. WOOLGAR 6/8/12 Date Signed ARIZONA, U.S.A. Expires 6/30/14

SHEET RS-3

6/8/2012 11:36:19 AM H:\PDATA\45104363\CADD\MAPPING\ROS\010RW188_RS-03.DGN

RESULTS OF SURVEY

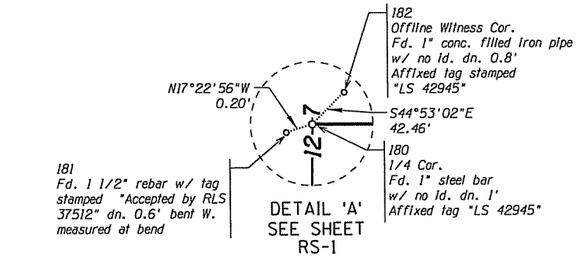

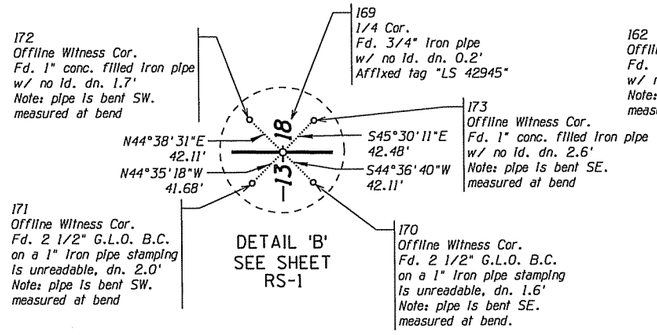

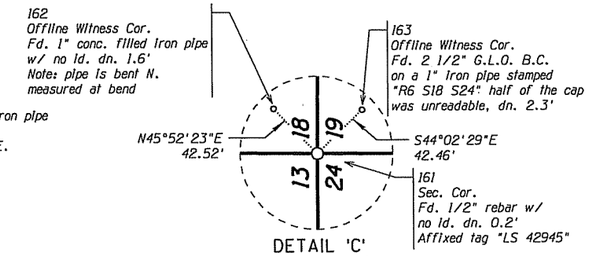

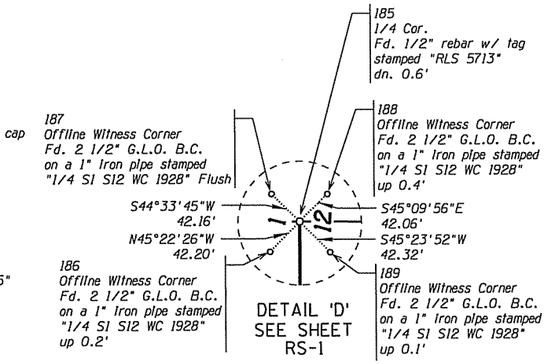

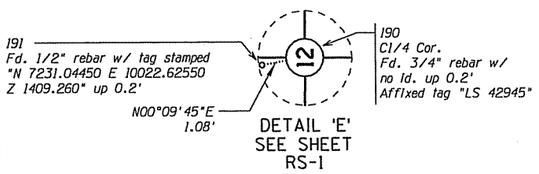

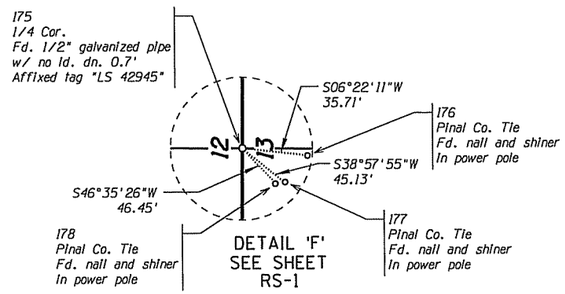

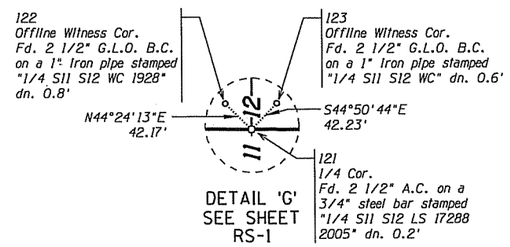

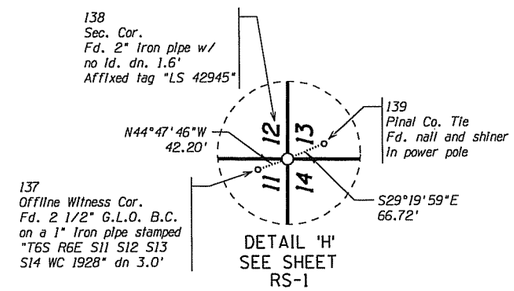

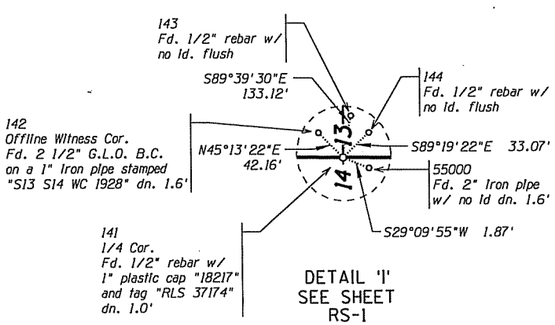

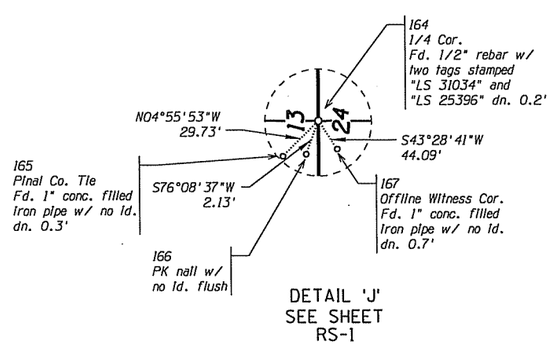

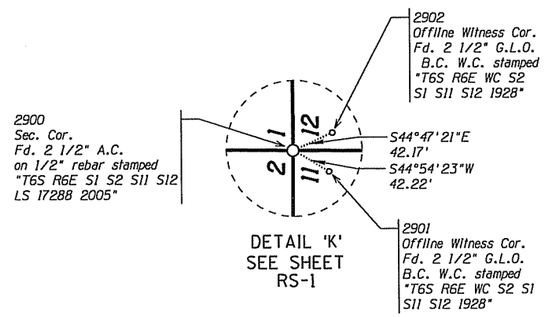

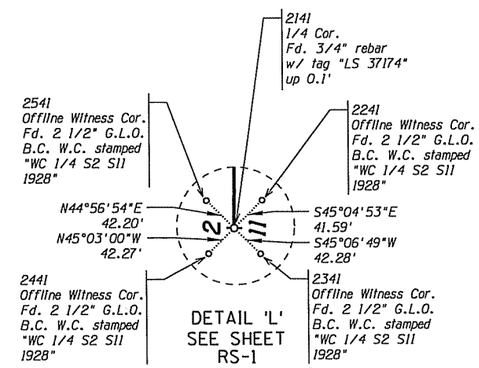

NOTE: SEE SHEETS RS-18 TO RS-20
FOR SECTION CORNER DETERMINATIONS

Click here for I-10 Index

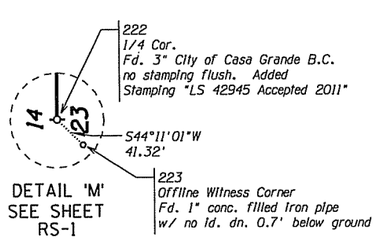

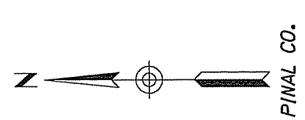

LEGEND

302 Set Monument

300 Found Monument

S.F.N.F. Search For Not found

301 Calculated position

Existing ADOT R/W monument

DETAIL SHEET

010RW188_RS-04.DGN

CHANGE ORDER REVISIONS			
C.O. NO.	DATE	BY	DESCRIPTION OF REVISIONS

DRAWING NO.	D-11-T-487
SURVEY	Oct.-Dec. 2009
DRAWN/DATE	MGB Oct. 2010
ADOT REVIEW	S. McLain
ROUTE NO.:	I-10

RBF CONSULTING — PLANNING • DESIGN • CONSTRUCTION
16605 NORTH 28TH AVENUE, SUITE 100
PHOENIX, ARIZONA 85032-2002
602.467.2200 • FAX 602.467.2201
www.RBF.com

ARIZONA DEPARTMENT OF TRANSPORTATION
INTERMODAL TRANSPORTATION DIVISION
RIGHT OF WAY PLANS SECTION

HIGHWAY NAME: PHOENIX - CASA GRANDE

FEDERAL AID NO.: UNASSIGNED

PROJECT NO.: 010 PN 188 H7585 01R

LOCATION: Val Vista Rd. to Junction I-8

REGISTERED LAND SURVEYOR — CERTIFICATE NO. 42945 — CHAD E. WOOLGAR — 6/8/12 — ARIZONA, U.S.A. — Expires 6/30/14

SHEET RS-4

6/8/2012 11:35:30 AM H:\PDATA\15104363\CADD\MAPPING\ROS\010RW188_RS-04.DGN

RESULTS OF SURVEY

Click here for I-10 Index

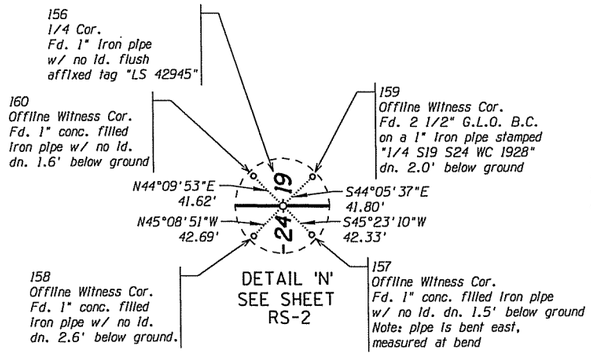

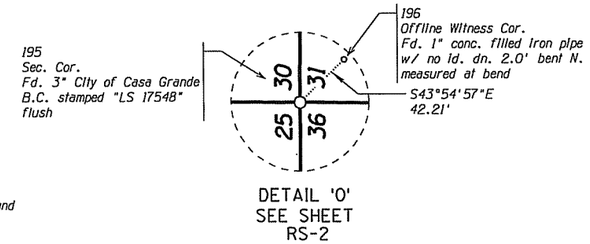

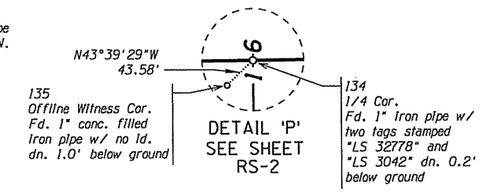

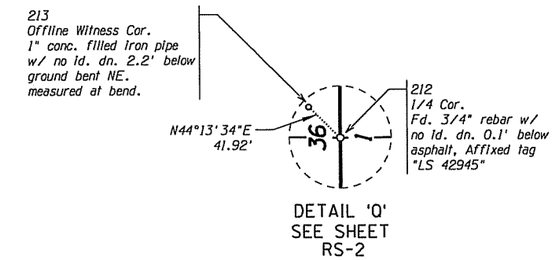

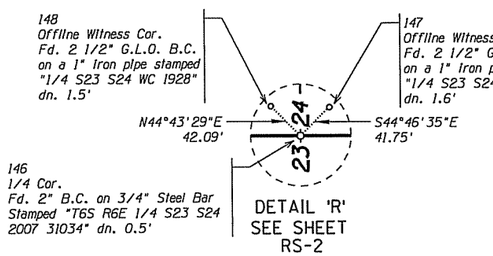

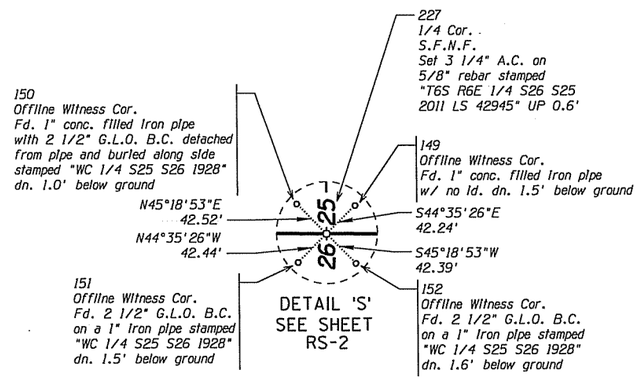

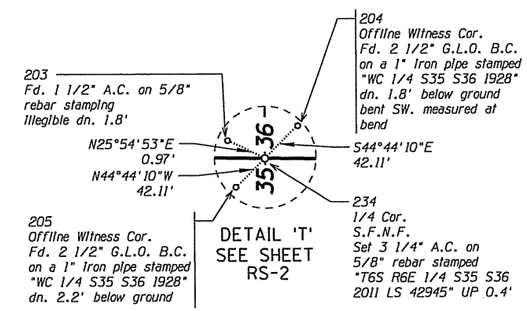

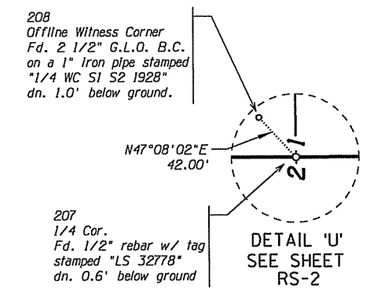

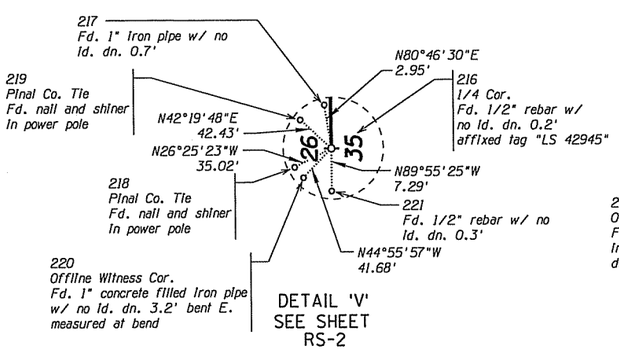

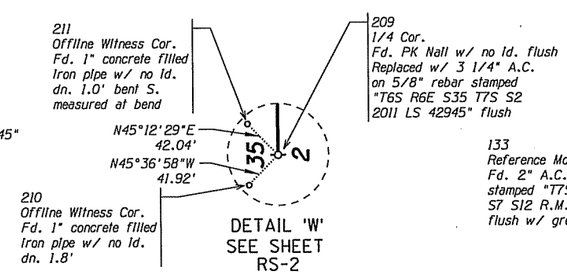

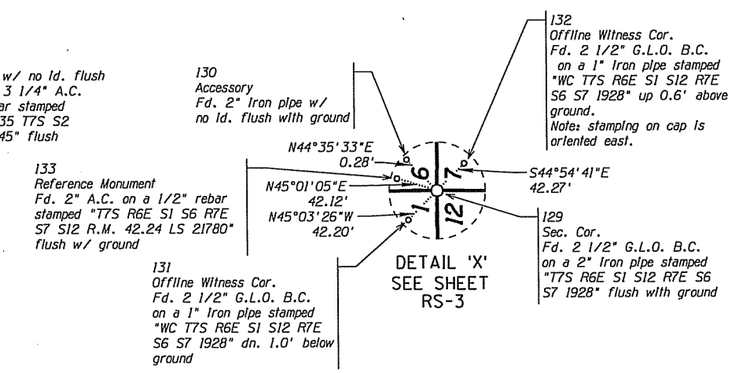

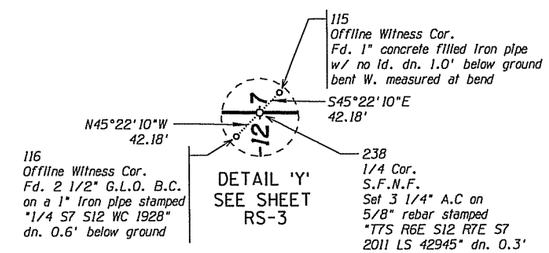

NOTE: SEE SHEETS RS-18 TO RS-20
FOR SECTION CORNER DETERMINATIONS

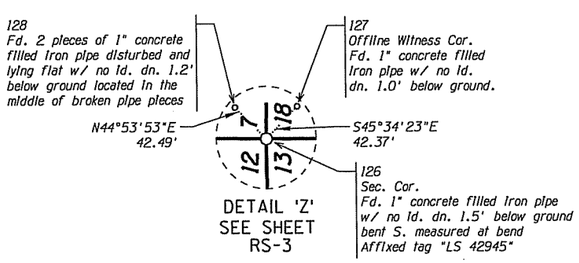

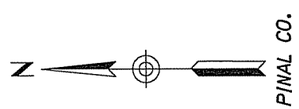

LEGEND

302 Set Monument

300 Found Monument

S.F.N.F. Search For Not Found

301 Calculated position

Existing ADOT R/W monument

DETAIL SHEET

010RW188_RS-05.DGN

CHANGE ORDER REVISIONS			
C.O. NO.	DATE	BY	DESCRIPTION OF REVISIONS

DRAWING NO.	D-11-T-487
SURVEY	Oct.-Dec. 2009
DRAWN/DATE	MGB Oct. 2010
ADOT REVIEW	S. McLain
ROUTE NO.:	I-10

RBF CONSULTING — PLANNING • DESIGN • CONSTRUCTION, 15005 NORTH 20TH AVENUE, SUITE 100, PHOENIX, ARIZONA 85032-2002, 602.487.2200 • FAX 602.487.2201, www.RBF.com

ARIZONA DEPARTMENT OF TRANSPORTATION
INTERMODAL TRANSPORTATION DIVISION
RIGHT OF WAY PLANS SECTION

HIGHWAY NAME: PHOENIX - CASA GRANDE

FEDERAL AID NO.: UNASSIGNED

PROJECT NO.: 010 PN 188 H7585 01R

LOCATION: Val Vista Rd. to Junction I-8

REGISTERED LAND SURVEYOR CERTIFICATE NO. 42945 CHAD E. WOOLGAR 6/8/12 ARIZONA, U.S.A. Expires 6/30/14

SHEET RS-5

H:\PDATA\45104363\CADD\MAPPING\ROS\010RW188_RS-05.DGN 6/8/2012 11:36:58 AM

RESULTS OF SURVEY

Click here for I-10 Index

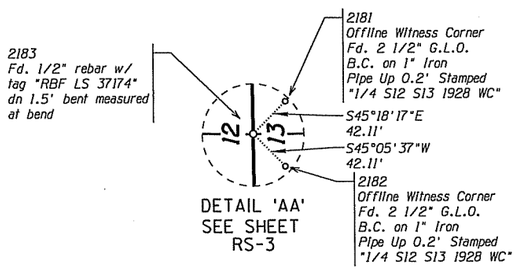

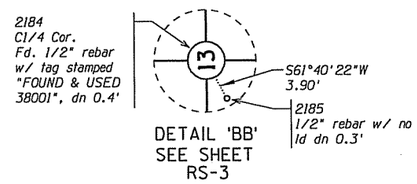

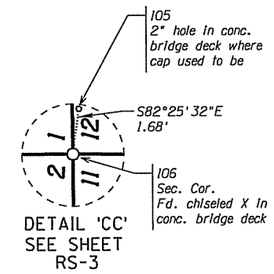

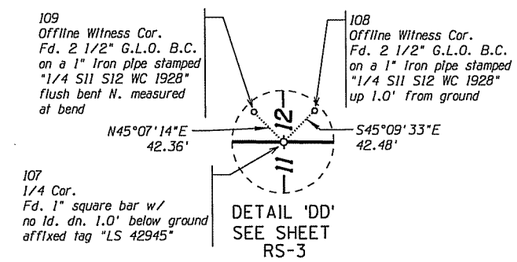

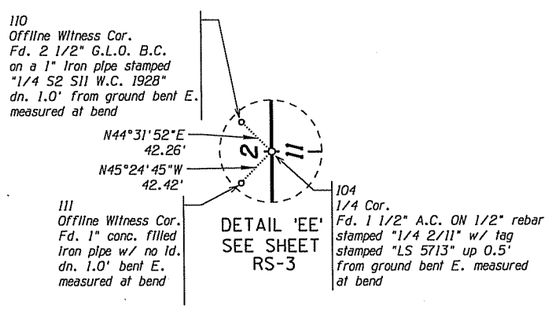

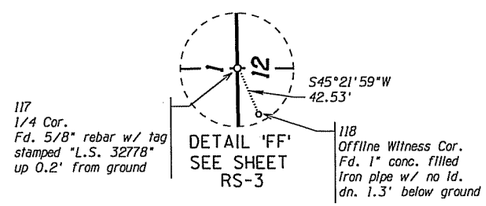

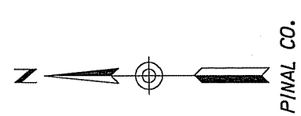

NOTE: SEE SHEETS RS-18 TO RS-20 FOR SECTION CORNER DETERMINATIONS

DETAIL SHEET

LEGEND

302 Set Monument

300 Found Monument

S.F.N.F. Search For Not found

301 Calculated position

Existing ADOT R/W monument

CHANGE ORDER REVISIONS			
C.O. NO.	DATE	BY	DESCRIPTION OF REVISIONS

DRAWING NO.	D-11-T-487
SURVEY	Oct.-Dec. 2009
DRAWN/DATE	MGB Oct. 2010
ADOT REVIEW	S. McLain

RBF CONSULTING — PLANNING • DESIGN • CONSTRUCTION
16605 NORTH 28TH AVENUE, SUITE 100
PHOENIX, ARIZONA 85023-2903
602.407.2200 • FAX 602.407.2201
www.RBF.com

ROUTE NO.: I-10

LOCATION: Val Vista Rd. to Junction I-8

ARIZONA DEPARTMENT OF TRANSPORTATION
INTERMODAL TRANSPORTATION DIVISION
RIGHT OF WAY PLANS SECTION

HIGHWAY NAME: PHOENIX - CASA GRANDE

FEDERAL AID NO.: UNASSIGNED

PROJECT NO.: 010 PN 188 H7585 01R

REGISTERED LAND SURVEYOR CERTIFICATE NO. 42945 CHAD E. WOOLGAR 6/8/12 Date Signed ARIZONA, U.S.A. Expires 6/30/14

SHEET RS-6

010RW188_RS-06.DGN

6/8/2012 11:37:14 AM H:\PDATA\45104363\CADD\MAPPING\RDS\010RW188_RS-06.DGN

RESULTS OF SURVEY

Click here for I-10 Index

NOTE: SEE SHEETS RS-18 TO RS-20 FOR SECTION CORNER DETERMINATIONS

* I-10 MEDIAN ℄ IS THE SAME AS THE MEDIAN & SURVEY ℄ SHOWN ON ADOT R/W PLANS NO. I-10-3(43)187.

I-10 MEDIAN ℄ STATION IS BASED ON RECORD STATION P.C. 2444+49.87 AS SHOWN ON ADOT R/W PLANS NO. I-10-3(43)187 HELD AT THE INTERSECTION OF A LINE BETWEEN FD. MONUMENTS AT POINTS 665 AND 666 AND THE I-10 MEDIAN ℄.

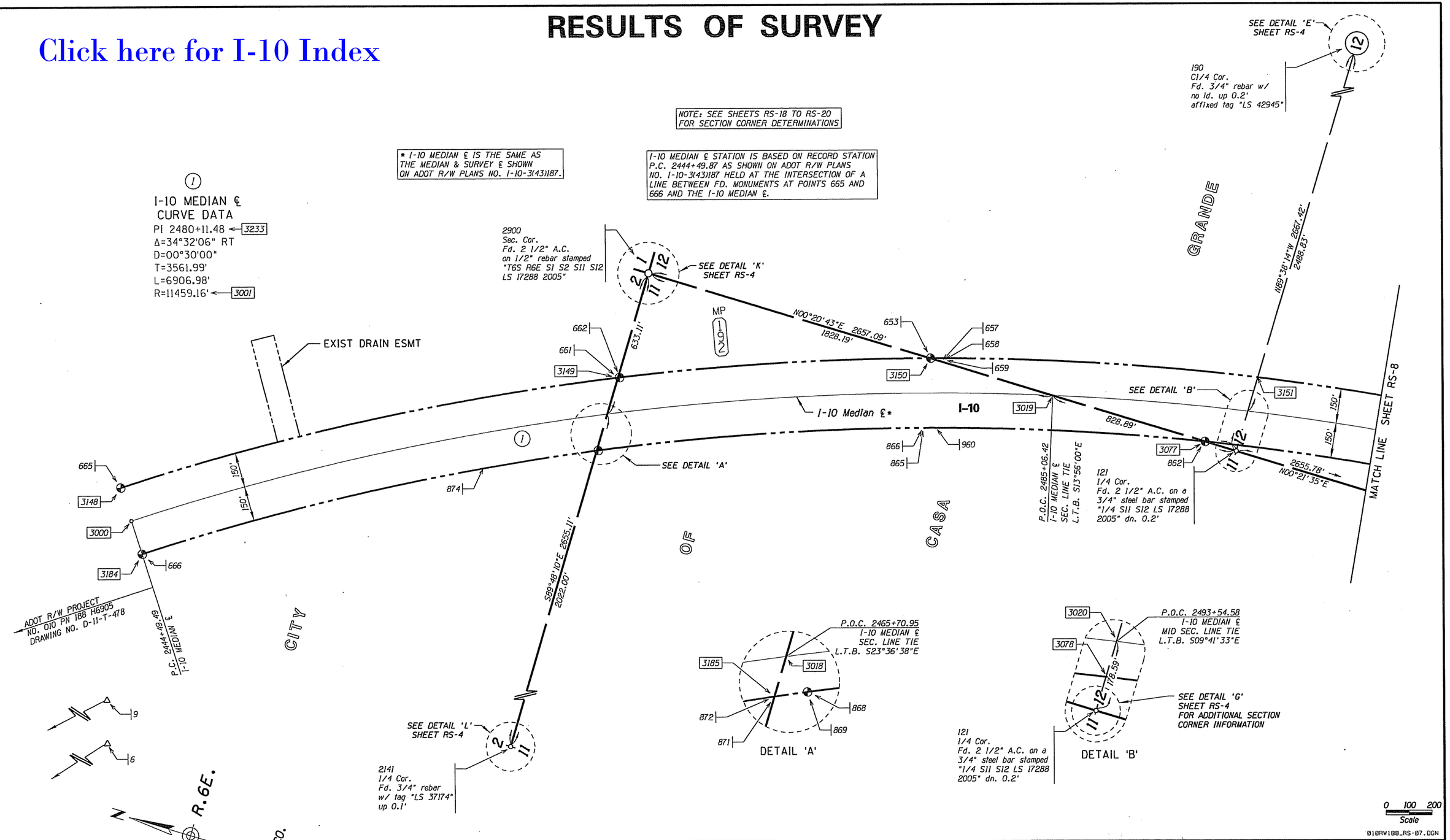

0 100 200
Scale

010RW188_RS-07.DGN

LEGEND

- 302 Set Monument
- 300 Found Monument
- 301 Calculated position
- Existing ADOT R/W monument

S.F.N.F. Searched For Not Found

CHANGE ORDER REVISIONS			
C.O. NO.	DATE	BY	DESCRIPTION OF REVISIONS

DRAWING NO.	D-11-T-487
SURVEY	Oct.-Dec. 2009
DRAWN/DATE	MGB Oct. 2010
ADOT REVIEW	S. McLain

RBF CONSULTING
PLANNING • DESIGN • CONSTRUCTION
16605 NORTH 28TH AVENUE, SUITE 100
PHOENIX, ARIZONA 85032-2602
602.487.2200 • FAX 602.487.2201
www.RBF.com

ARIZONA DEPARTMENT OF TRANSPORTATION
INTERMODAL TRANSPORTATION DIVISION
RIGHT OF WAY PLANS SECTION

HIGHWAY NAME: PHOENIX - CASA GRANDE
FEDERAL AID NO.: UNASSIGNED
PROJECT NO.: 010 PN 188 H7585 01R
ROUTE NO.: I-10
LOCATION: Val Vista Rd. to Junction I-8

REGISTERED LAND SURVEYOR CERTIFICATE NO. 42945 CHAD E. WOOLGAR 6/8/12 ARIZONA, U.S.A. Expires 6/30/14

SHEET RS-7

6/8/2012 12:15:37 PM H:\PDATA\45104363\CADD\HAPPING\R05\010RW188_RS-07.DGN

RESULTS OF SURVEY

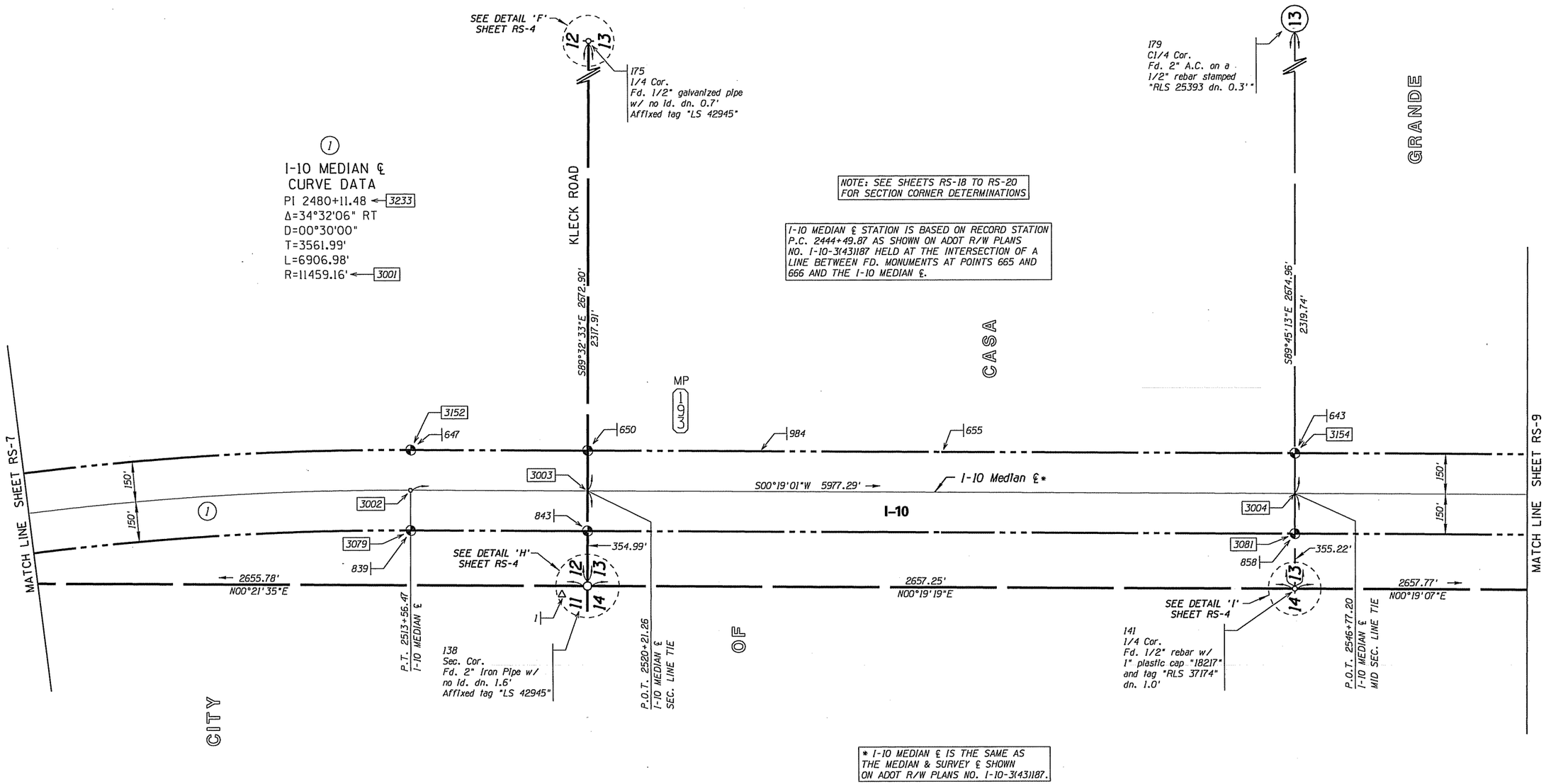

Click here for I-10 Index

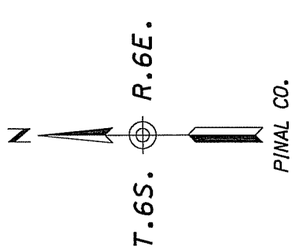

LEGEND

302 Set Monument

300 Found Monument

301 Calculated position

Existing ADOT R/W monument

S.F.N.F. Searched For Not Found

0 100 200
Scale

010RW188_RS-08.DGN

CHANGE ORDER REVISIONS			
C.O. NO.	DATE	BY	DESCRIPTION OF REVISIONS

DRAWING NO.	D-11-T-487
SURVEY	Oct.-Dec. 2009
DRAWN/DATE	MGB Oct. 2010
ADOT REVIEW	S. McLain

RBF CONSULTING — PLANNING • DESIGN • CONSTRUCTION, 16605 NORTH 28TH AVENUE, SUITE 100, PHOENIX, ARIZONA 85032-2602, 602.467.2200 • FAX 602.467.2201, www.RBF.com

ARIZONA DEPARTMENT OF TRANSPORTATION
INTERMODAL TRANSPORTATION DIVISION
RIGHT OF WAY PLANS SECTION

HIGHWAY NAME: PHOENIX - CASA GRANDE

FEDERAL AID NO.: UNASSIGNED

PROJECT NO.: 010 PN 188 H7585 01R

ROUTE NO.: I-10

LOCATION: Val Vista Rd. to Junction I-8

REGISTERED LAND SURVEYOR, CERTIFICATE NO. 42945, CHAD E. WOOLGAR, 6/8/12, ARIZONA, U.S.A., Expires 6/30/14

SHEET RS-8

6/8/2012 11:37:43 AM H:\PDATA\45104363\CADD\MAPPING\ROS\010RW188_RS-08.DGN

RESULTS OF SURVEY

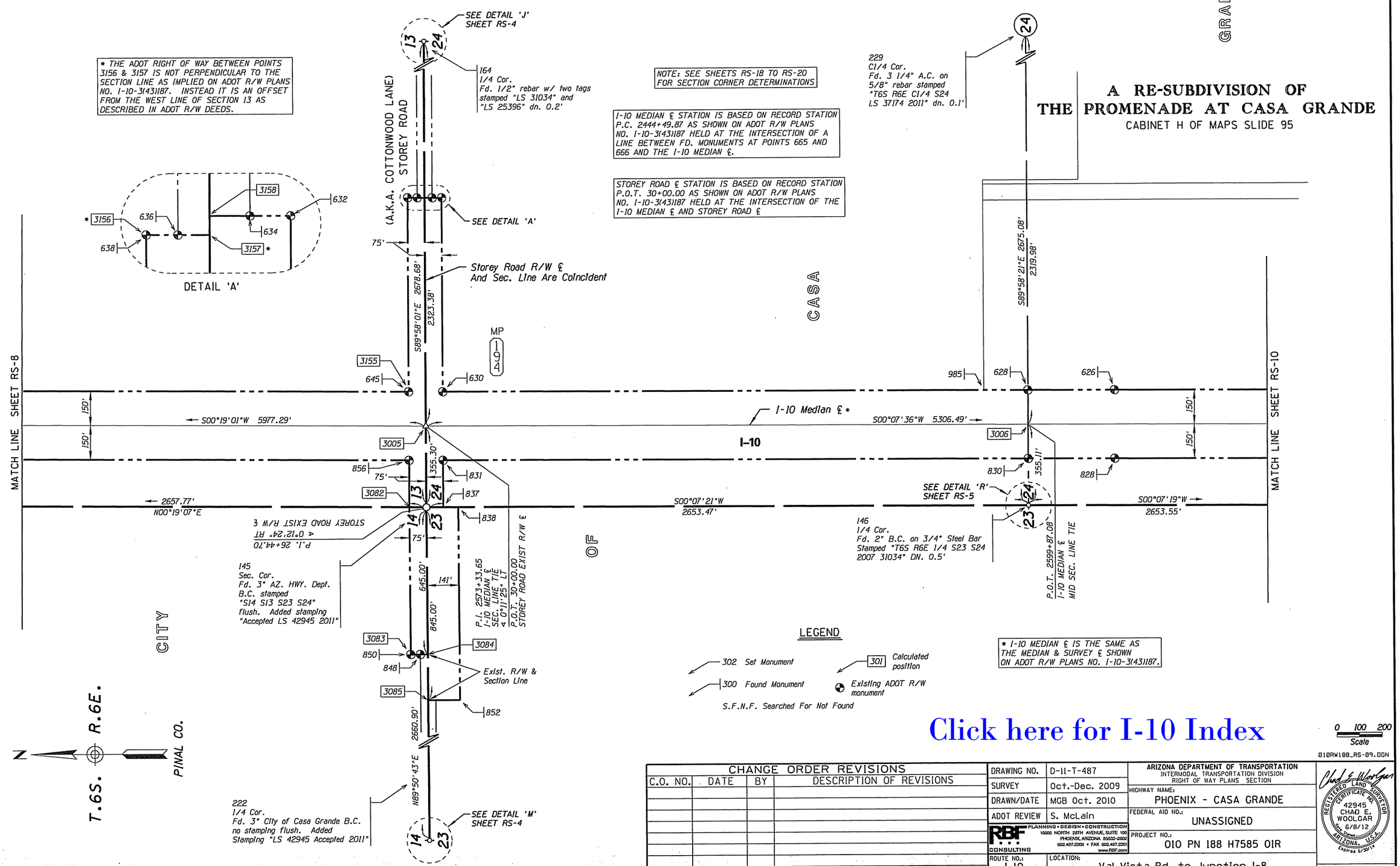

CHANGE ORDER REVISIONS			
C.O. NO.	DATE	BY	DESCRIPTION OF REVISIONS

DRAWING NO.	D-11-T-487
SURVEY	Oct.-Dec. 2009
DRAWN/DATE	MGB Oct. 2010
ADOT REVIEW	S. McLain
ROUTE NO.:	I-10
LOCATION:	Val Vista Rd. to Junction I-8

RBF CONSULTING — PLANNING • DESIGN • CONSTRUCTION
16605 NORTH 28TH AVENUE, SUITE 100
PHOENIX, ARIZONA 85032-2602
602.467.2200 • FAX 602.467.2201
www.RBF.com

ARIZONA DEPARTMENT OF TRANSPORTATION
INTERMODAL TRANSPORTATION DIVISION
RIGHT OF WAY PLANS SECTION

HIGHWAY NAME: PHOENIX - CASA GRANDE
FEDERAL AID NO.: UNASSIGNED
PROJECT NO.: 010 PN 188 H7585 01R

REGISTERED LAND SURVEYOR CERTIFICATE NO. 42945 CHAD E. WOOLGAR 6/8/12 ARIZONA, U.S.A. Expires 6/30/14

SHEET RS-9

6/8/2012 11:37:53 AM H:\PDATA\51043G3\CADD\MAPPING\ROS\010RW188_RS-09.DGN

Click here for I-10 Index

RESULTS OF SURVEY

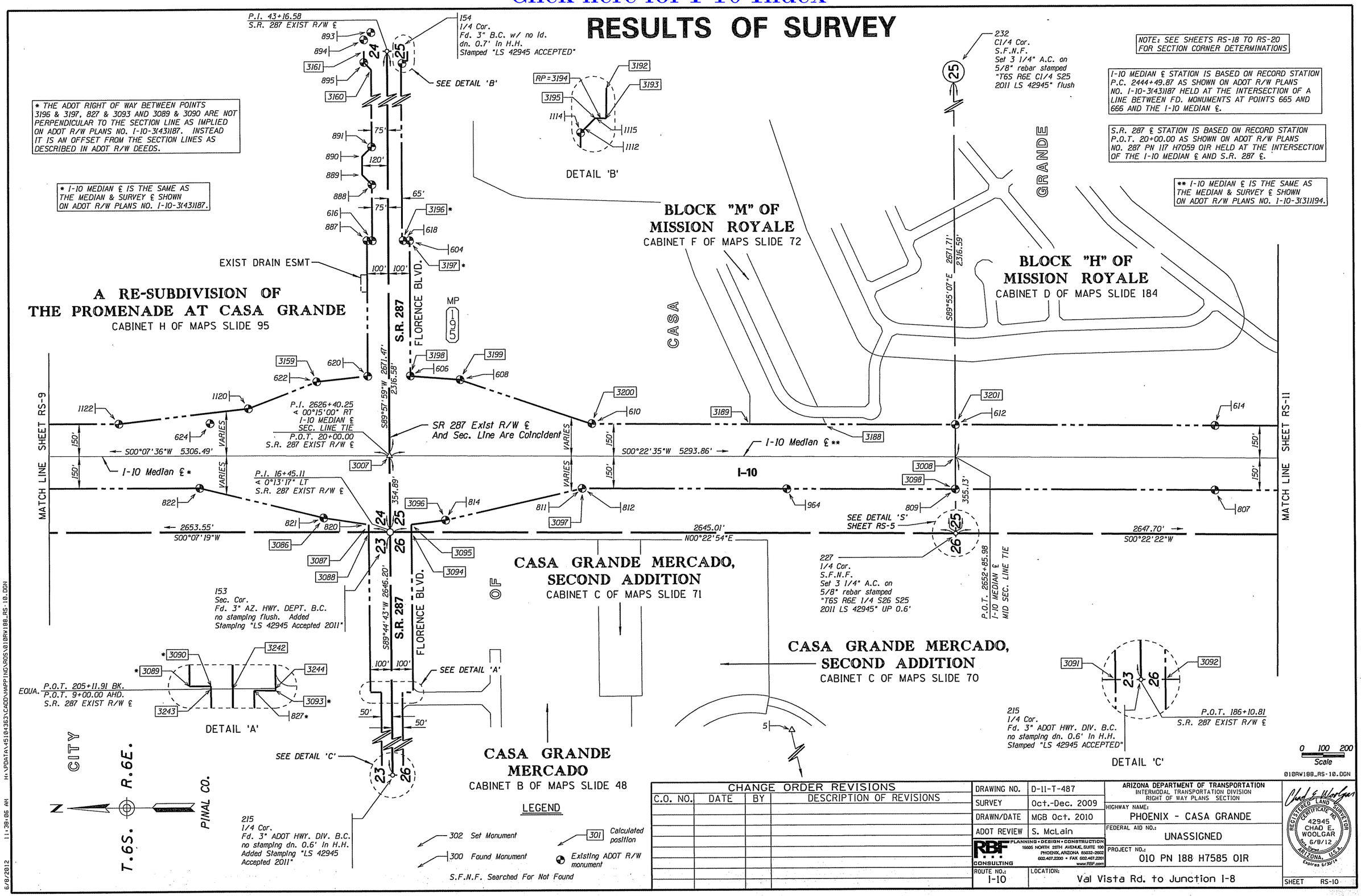

CHANGE ORDER REVISIONS			
C.O. NO.	DATE	BY	DESCRIPTION OF REVISIONS

DRAWING NO.	D-11-T-487
SURVEY	Oct.-Dec. 2009
DRAWN/DATE	MGB Oct. 2010
ADOT REVIEW	S. McLain
ROUTE NO.:	I-10

RBF CONSULTING — PLANNING • DESIGN • CONSTRUCTION, 16605 NORTH 28TH AVENUE, SUITE 100, PHOENIX, ARIZONA 85032-2602, 602.487.2200 • FAX 602.487.2201, www.RBF.com

ARIZONA DEPARTMENT OF TRANSPORTATION
INTERMODAL TRANSPORTATION DIVISION
RIGHT OF WAY PLANS SECTION

HIGHWAY NAME: PHOENIX - CASA GRANDE
FEDERAL AID NO.: UNASSIGNED
PROJECT NO.: 010 PN 188 H7585 01R
LOCATION: Val Vista Rd. to Junction I-8

REGISTERED LAND SURVEYOR, CERTIFICATE NO. 42945, CHAD E. WOOLGAR, 6/8/12, ARIZONA, U.S.A., Expires 6/30/13

SHEET RS-10

6/8/2012 11:38:06 AM H:\PDATA\45104363\CADD\MAPPING\ROS\010RW188_RS-10.DGN

RESULTS OF SURVEY

Click here for I-10 Index

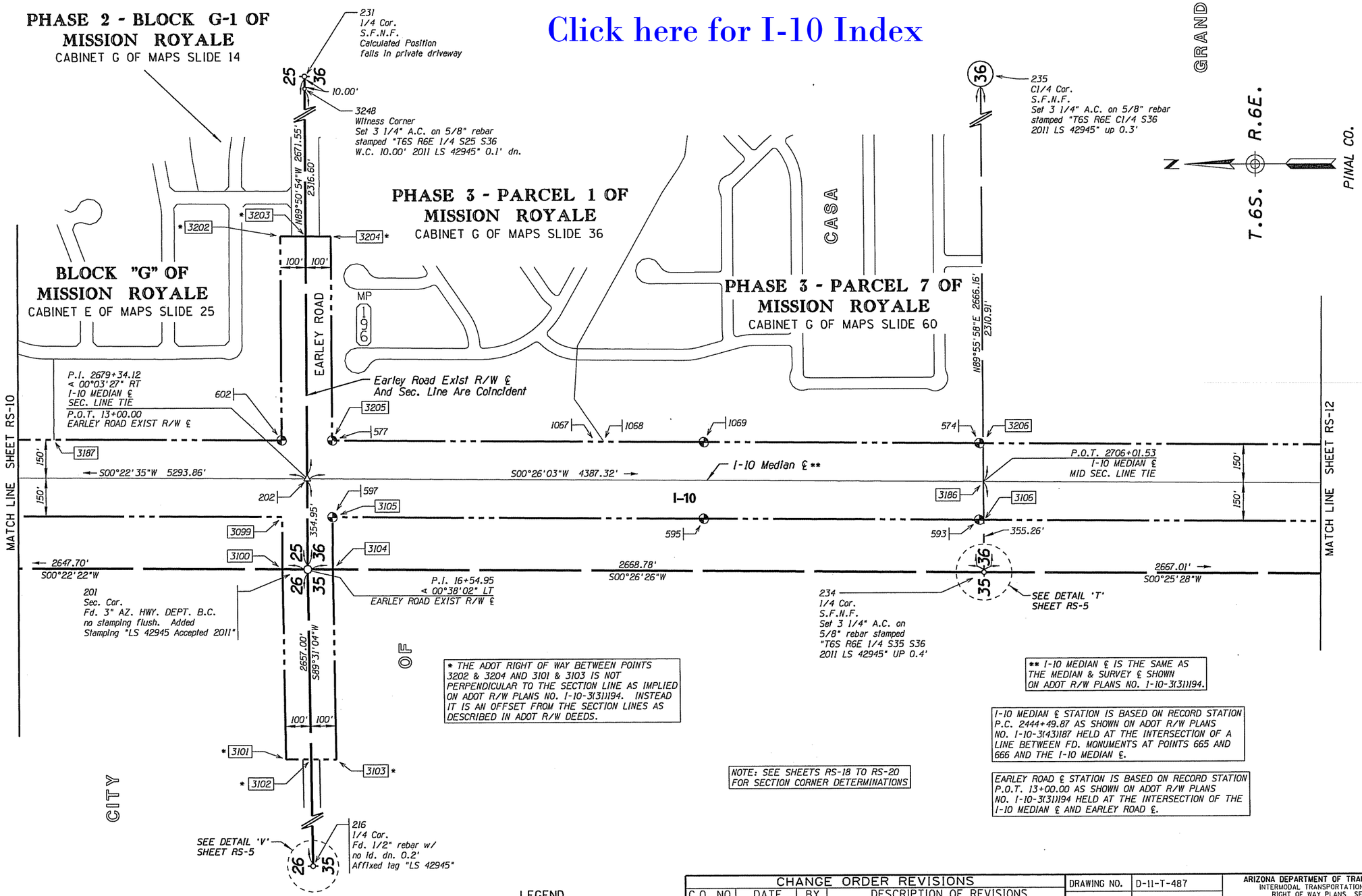

* THE ADOT RIGHT OF WAY BETWEEN POINTS 3202 & 3204 AND 3101 & 3103 IS NOT PERPENDICULAR TO THE SECTION LINE AS IMPLIED ON ADOT R/W PLANS NO. I-10-3(31)194. INSTEAD IT IS AN OFFSET FROM THE SECTION LINES AS DESCRIBED IN ADOT R/W DEEDS.

** I-10 MEDIAN ℄ IS THE SAME AS THE MEDIAN & SURVEY ℄ SHOWN ON ADOT R/W PLANS NO. I-10-3(31)194.

I-10 MEDIAN ℄ STATION IS BASED ON RECORD STATION P.C. 2444+49.87 AS SHOWN ON ADOT R/W PLANS NO. I-10-3(43)187 HELD AT THE INTERSECTION OF A LINE BETWEEN FD. MONUMENTS AT POINTS 665 AND 666 AND THE I-10 MEDIAN ℄.

EARLEY ROAD ℄ STATION IS BASED ON RECORD STATION P.O.T. 13+00.00 AS SHOWN ON ADOT R/W PLANS NO. I-10-3(31)194 HELD AT THE INTERSECTION OF THE I-10 MEDIAN ℄ AND EARLEY ROAD ℄.

NOTE: SEE SHEETS RS-18 TO RS-20 FOR SECTION CORNER DETERMINATIONS

0 100 200
Scale

010RW188_RS-11.DGN

LEGEND

- 302 Set Monument
- 300 Found Monument
- 301 Calculated position
- Existing ADOT R/W monument

S.F.N.F. Searched For Not Found

CHANGE ORDER REVISIONS			
C.O. NO.	DATE	BY	DESCRIPTION OF REVISIONS

DRAWING NO.	D-11-T-487
SURVEY	Oct.-Dec. 2009
DRAWN/DATE	MGB Oct. 2010
ADOT REVIEW	S. McLain
ROUTE NO.:	I-10
LOCATION:	Val Vista Rd. to Junction I-8

RBF CONSULTING — PLANNING • DESIGN • CONSTRUCTION
16605 NORTH 28TH AVENUE, SUITE 100
PHOENIX, ARIZONA 85032-2002
602.407.2200 • FAX 602.407.2201
www.RBF.com

ARIZONA DEPARTMENT OF TRANSPORTATION
INTERMODAL TRANSPORTATION DIVISION
RIGHT OF WAY PLANS SECTION

HIGHWAY NAME:
PHOENIX - CASA GRANDE

FEDERAL AID NO.:
UNASSIGNED

PROJECT NO.:
010 PN 188 H7585 01R

REGISTERED LAND SURVEYOR
CERTIFICATE NO. 42945
CHAD E. WOOLGAR
6/8/12
ARIZONA, U.S.A.
Expires 6/30/13

SHEET RS-11

6/8/2012 12:15:41 PM H:\PDATA\45104363\CADD\HAPPING\RDS\010RW188_RS-11.DGN

RESULTS OF SURVEY

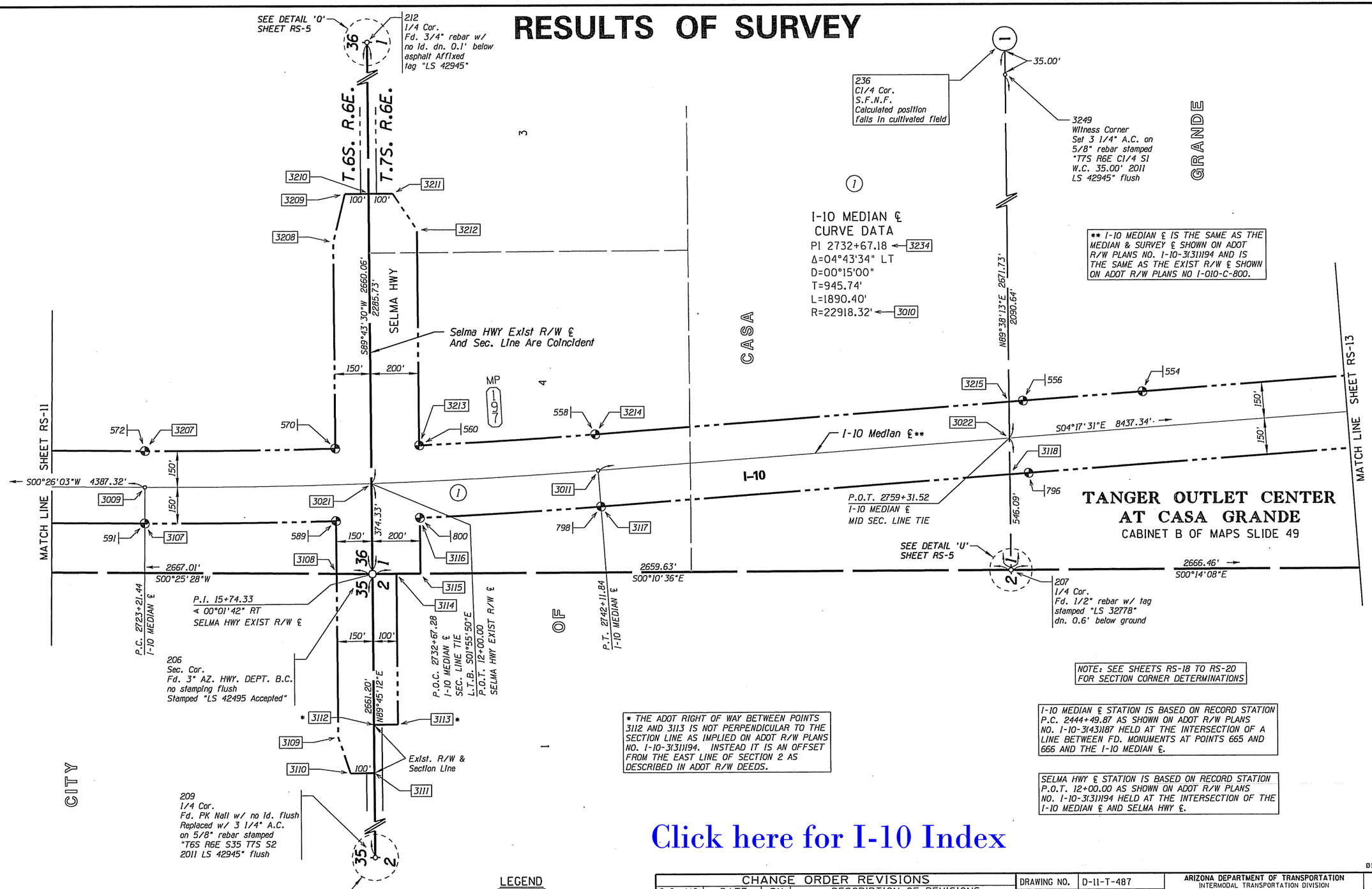

NOTE: SEE SHEETS RS-18 TO RS-20 FOR SECTION CORNER DETERMINATIONS

* THE ADOT RIGHT OF WAY BETWEEN POINTS 3112 AND 3113 IS NOT PERPENDICULAR TO THE SECTION LINE AS IMPLIED ON ADOT R/W PLANS NO. I-10-3(31)194. INSTEAD IT IS AN OFFSET FROM THE EAST LINE OF SECTION 2 AS DESCRIBED IN ADOT R/W DEEDS.

I-10 MEDIAN ℄ STATION IS BASED ON RECORD STATION P.C. 2444+49.87 AS SHOWN ON ADOT R/W PLANS NO. I-10-3(43)187 HELD AT THE INTERSECTION OF A LINE BETWEEN FD. MONUMENTS AT POINTS 665 AND 666 AND THE I-10 MEDIAN ℄.

SELMA HWY ℄ STATION IS BASED ON RECORD STATION P.O.T. 12+00.00 AS SHOWN ON ADOT R/W PLANS NO. I-10-3(31)194 HELD AT THE INTERSECTION OF THE I-10 MEDIAN ℄ AND SELMA HWY ℄.

Click here for I-10 Index

LEGEND

- 302 Set Monument
- 300 Found Monument
- 301 Calculated position
- Existing ADOT R/W monument
- S.F.N.F. Searched For Not Found

0 100 200
Scale

010RW188_RS-12.DGN

CHANGE ORDER REVISIONS			
C.O. NO.	DATE	BY	DESCRIPTION OF REVISIONS

DRAWING NO.	D-11-T-487
SURVEY	Oct.-Dec. 2009
DRAWN/DATE	MGB Oct. 2010
ADOT REVIEW	S. McLain
ROUTE NO.:	I-10

RBF CONSULTING — PLANNING • DESIGN • CONSTRUCTION
16605 NORTH 28TH AVENUE, SUITE 100
PHOENIX, ARIZONA 85032-2602
602.487.2200 • FAX 602.487.2201
www.RBF.com

ARIZONA DEPARTMENT OF TRANSPORTATION
INTERMODAL TRANSPORTATION DIVISION
RIGHT OF WAY PLANS SECTION

HIGHWAY NAME: PHOENIX - CASA GRANDE
FEDERAL AID NO.: UNASSIGNED
PROJECT NO.: 010 PN 188 H7585 01R
LOCATION: Val Vista Rd. to Junction I-8

REGISTERED LAND SURVEYOR CERTIFICATE NO. 42945 CHAD E. WOOLGAR 6/8/12 ARIZONA, U.S.A. Expires 6/30/14

SHEET RS-12

6/8/2012 11:38:31 AM H:\PDATA\45184363\CADD\MAPPING\RDS\010RW188_RS-12.DGN

Click here for I-10 Index

RESULTS OF SURVEY

NOTE: DURING THE COURSE OF THIS SURVEY IT WAS DISCOVERED THAT AN ERRONEOUS SECTION CORNER POSITION FOR THE SOUTHWEST CORNER OF SECTION 1 T.7S. R.6E. WAS USED ON ADOT R/W PLANS NO. I-010-C-800, TRACS NO. 010 PN 198 H5487 01R. BECAUSE OF THIS, THE SECTION TIE INFORMATION IN THE RESULTING R/W DEEDS FOR THE ADOT R/W ALONG THE EAST SIDE OF THE I-10/S.R. 84 INTERCHANGE BETWEEN R/W LINE POINTS 3216 AND 3222 ARE ALSO ERRONEOUS. THE EXISTING ADOT R/W SHOWN HEREON WAS ANALYZED AND PLACED AS A BEST FIT TO THE EXISTING ADOT R/W MONUMENTS IN THE AREA, ALONG WITH, THE NORTHWEST CORNER AND SOUTH 1/4 CORNERS OF SECTION 1 AS SHOWN ON SAID ADOT R/W PLANS. FOR MORE EXPLANATION OF THE ERRONEOUS SECTION CORNER SEE THE SECTION CORNERS TABLE ON SHEET RS-18.

UNION PACIFIC RAILROAD ℄ WAS DERIVED BY LINEAR REGRESSION OF EXISTING RAILROAD RAILS.

*** EXIST RAMP C ℄ IS THE SAME AS THE RAMP C SURVEY & CONSTRUCTION ℄ SHOWN ON ADOT R/W PLANS NO. IR-10-4-801.

** I-10 MEDIAN ℄ IS THE SAME AS THE MEDIAN & SURVEY ℄ SHOWN ON ADOT R/W PLANS NO. I-10-3(31)194 AND IS THE SAME AS THE EXIST R/W ℄ SHOWN ON ADOT R/W PLANS NO I-010-C-800.

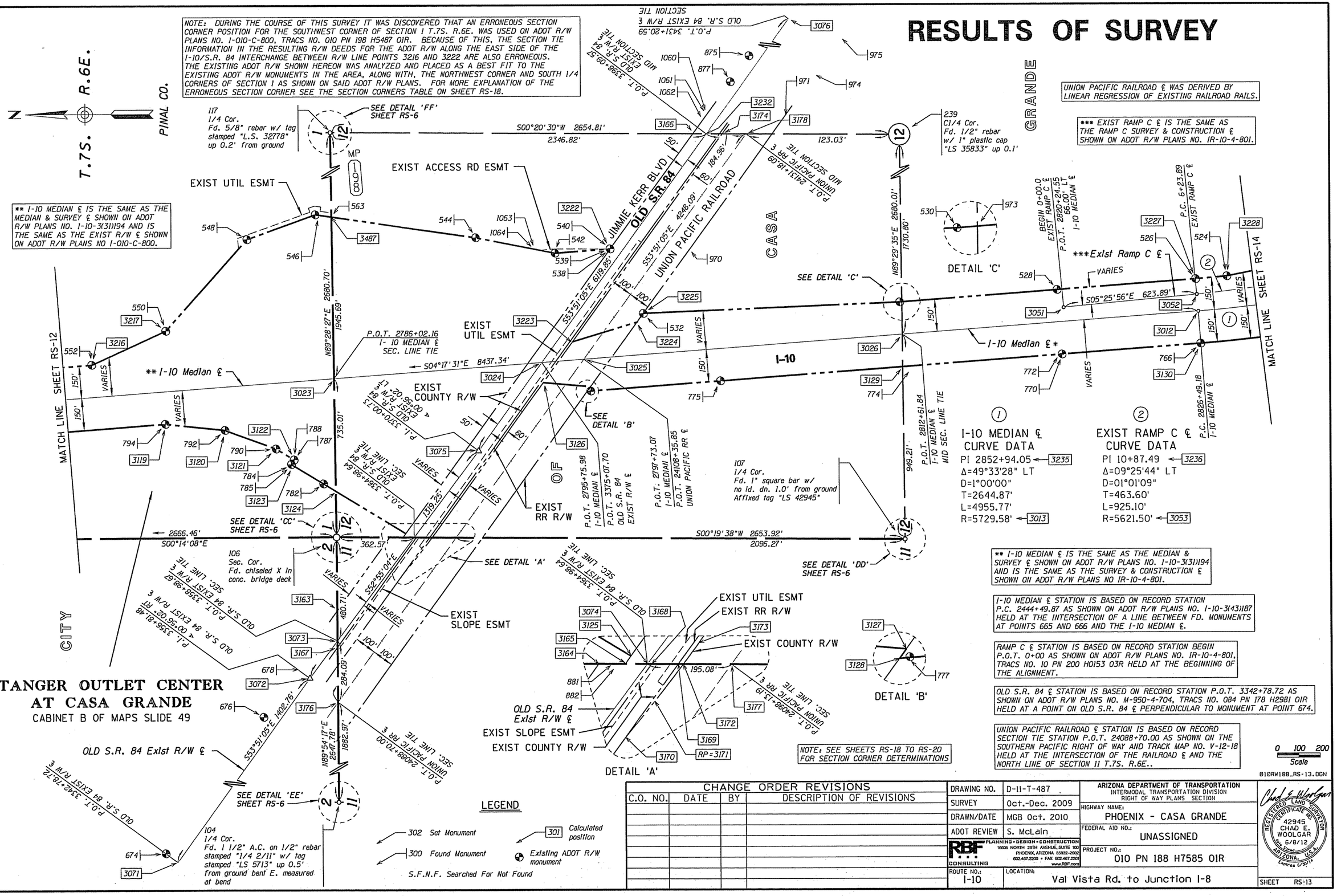

I-10 MEDIAN ℄ CURVE DATA

PI 2852+94.05 ← 3235
Δ=49°33'28" LT
D=1°00'00"
T=2644.87'
L=4955.77'
R=5729.58' ← 3013

EXIST RAMP C ℄ CURVE DATA

PI 10+87.49 ← 3236
Δ=09°25'44" LT
D=01°01'09"
T=463.60'
L=925.10'
R=5621.50' ← 3053

** I-10 MEDIAN ℄ IS THE SAME AS THE MEDIAN & SURVEY ℄ SHOWN ON ADOT R/W PLANS NO. I-10-3(31)194 AND IS THE SAME AS THE SURVEY & CONSTRUCTION ℄ SHOWN ON ADOT R/W PLANS NO IR-10-4-801.

I-10 MEDIAN ℄ STATION IS BASED ON RECORD STATION P.C. 2444+49.87 AS SHOWN ON ADOT R/W PLANS NO. I-10-3(43)187 HELD AT THE INTERSECTION OF A LINE BETWEEN FD. MONUMENTS AT POINTS 665 AND 666 AND THE I-10 MEDIAN ℄.

RAMP C ℄ STATION IS BASED ON RECORD STATION BEGIN P.O.T. 0+00 AS SHOWN ON ADOT R/W PLANS NO. IR-10-4-801, TRACS NO. 10 PN 200 H0153 03R HELD AT THE BEGINNING OF THE ALIGNMENT.

OLD S.R. 84 ℄ STATION IS BASED ON RECORD STATION P.O.T. 3342+78.72 AS SHOWN ON ADOT R/W PLANS NO. M-950-4-704, TRACS NO. 084 PN 178 H2981 01R HELD AT A POINT ON OLD S.R. 84 ℄ PERPENDICULAR TO MONUMENT AT POINT 674.

UNION PACIFIC RAILROAD ℄ STATION IS BASED ON RECORD SECTION TIE STATION P.O.T. 24088+70.00 AS SHOWN ON THE SOUTHERN PACIFIC RIGHT OF WAY AND TRACK MAP NO. V-12-18 HELD AT THE INTERSECTION OF THE RAILROAD ℄ AND THE NORTH LINE OF SECTION 11 T.7S. R.6E..

NOTE: SEE SHEETS RS-18 TO RS-20 FOR SECTION CORNER DETERMINATIONS

0 100 200
Scale

010RW188_RS-13.DGN

LEGEND

- 302 Set Monument
- 300 Found Monument
- S.F.N.F. Searched For Not Found
- 301 Calculated position
- Existing ADOT R/W monument

CHANGE ORDER REVISIONS			
C.O. NO.	DATE	BY	DESCRIPTION OF REVISIONS

DRAWING NO.	D-11-T-487
SURVEY	Oct.-Dec. 2009
DRAWN/DATE	MGB Oct. 2010
ADOT REVIEW	S. McLain
ROUTE NO.:	I-10
LOCATION:	Val Vista Rd. to Junction I-8

RBF CONSULTING — PLANNING • DESIGN • CONSTRUCTION, 16605 NORTH 28TH AVENUE, SUITE 100, PHOENIX, ARIZONA 85032-2602, 602.487.2200 • FAX 602.487.2201, www.RBF.com

ARIZONA DEPARTMENT OF TRANSPORTATION
INTERMODAL TRANSPORTATION DIVISION
RIGHT OF WAY PLANS SECTION

HIGHWAY NAME: PHOENIX - CASA GRANDE
FEDERAL AID NO.: UNASSIGNED
PROJECT NO.: 010 PN 188 H7585 01R

REGISTERED LAND SURVEYOR CERTIFICATE NO. 42945 CHAD E. WOOLGAR 6/8/12 ARIZONA, U.S.A. Expires 6/30/14

SHEET RS-13

6/8/2012 12:03:21 PM H:\PDATA\4510H363\CADD\WAPPING\RDS\010RW188_RS-13.DGN

Click here for I-10 Index

RESULTS OF SURVEY

** I-10 MEDIAN ℄ IS THE SAME AS THE MEDIAN & SURVEY ℄ SHOWN ON ADOT R/W PLANS NO. I-10-3(31)194 AND IS THE SAME AS THE SURVEY & CONSTRUCTION ℄ SHOWN ON ADOT R/W PLANS NO IR-10-4-801, THE SAME AS THE MEDIAN ℄ SHOWN ON ADOT R/W PLANS NO. I-10-3(31)194 AND THE SAME AS I-10 MED. ℄ SHOWN ON ADOT R/W PLANS NO. I-10-4(45)199.

I-10 MEDIAN ℄ STATION IS BASED ON RECORD STATION P.C. 2444+49.87 AS SHOWN ON ADOT R/W PLANS NO. I-10-3(43)187 HELD AT THE INTERSECTION OF A LINE BETWEEN FD. MONUMENTS AT POINTS 665 AND 666 AND THE I-10 MEDIAN ℄.

I-8 MEDIAN ℄ STATION IS BASED ON RECORD STATION P.C. 3320+00.00 AS SHOWN ON ADOT R/W PLANS NO. I-8-2(37)173 HELD AT THE INTERSECTION OF A LINE BETWEEN FD. MONUMENTS AT POINTS 706 AND 714 AND THE I-8 MEDIAN ℄.

**** I-8 EXIST. MEDIAN ℄ IS THE SAME AS THE NON-LABELED ℄ SHOWN ON ADOT R/W PLANS NO. I-10-3(31)194.

* I-8 EXIST. EAST BOUND ℄ IS THE SAME AS THE EAST BOUND 8 CONST. ℄ SHOWN ON ADOT R/W PLANS NO. I-10-3(31)194.

I-8 EAST BOUND ℄ STATION BETWEEN P.O.T. 3291+13.72 AND P.O.C. 3366+48.14 BK. IS BASED ON THE I-8 MEDIAN ℄. STATION P.O.C. 3366+46.61 AHD. TO END 3397+88.54 IS BASED ON RECORD STATION P.T. 3374+29.68 AS SHOWN ON ADOT R/W PLANS NO. I-10-3(31)194 HELD AT A POINT ON THE CENTERLINE PERPENDICULAR TO POINT 739.

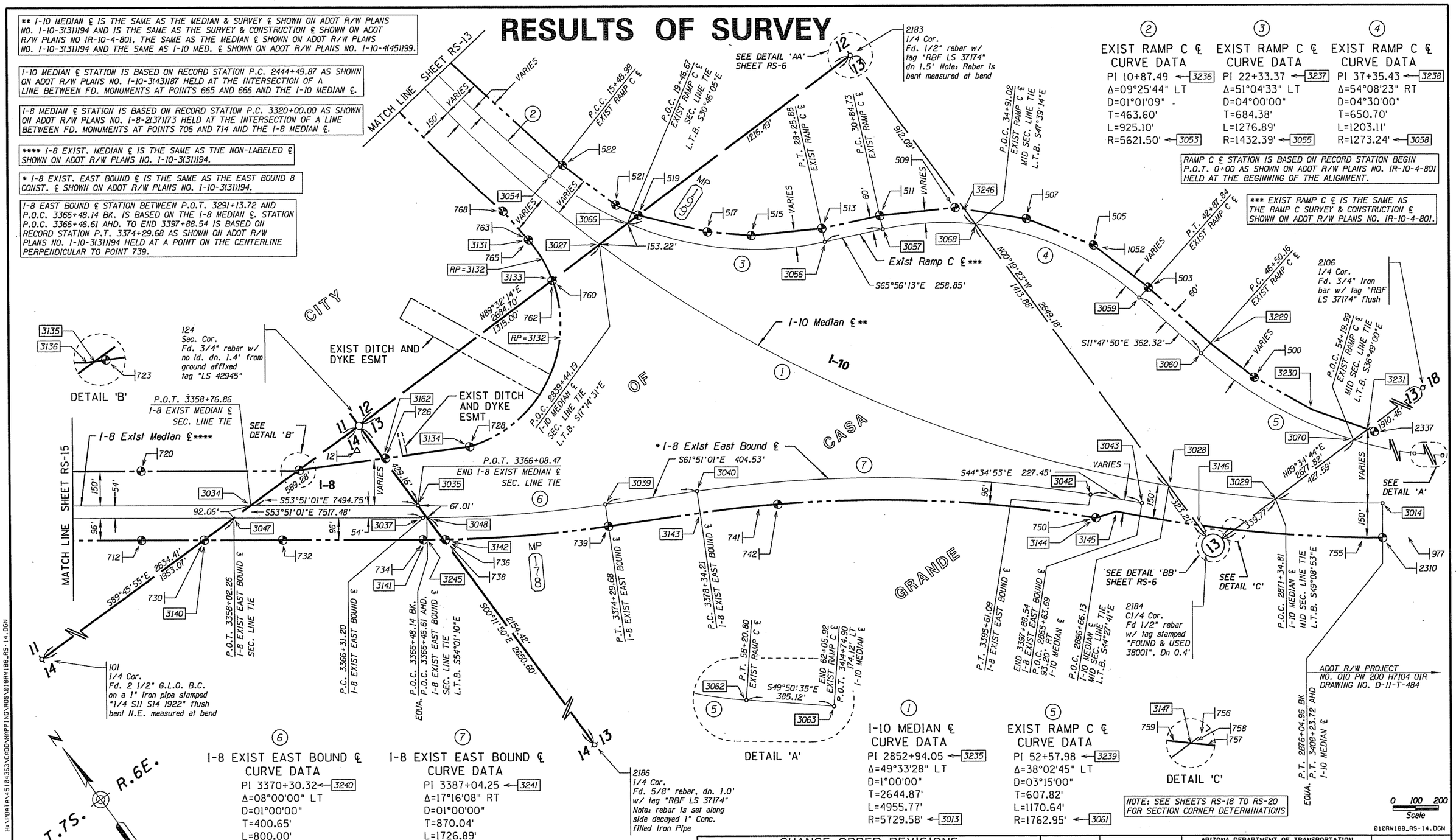

② EXIST RAMP C ℄ CURVE DATA	③ EXIST RAMP C ℄ CURVE DATA	④ EXIST RAMP C ℄ CURVE DATA
PI 10+87.49 ← 3236	PI 22+33.37 ← 3237	PI 37+35.43 ← 3238
Δ=09°25'44" LT	Δ=51°04'33" LT	Δ=54°08'23" RT
D=01°01'09"	D=04°00'00"	D=04°30'00"
T=463.60'	T=684.38'	T=650.70'
L=925.10'	L=1276.89'	L=1203.11'
R=5621.50' ← 3053	R=1432.39' ← 3055	R=1273.24' ← 3058

RAMP C ℄ STATION IS BASED ON RECORD STATION BEGIN P.O.T. 0+00 AS SHOWN ON ADOT R/W PLANS NO. IR-10-4-801 HELD AT THE BEGINNING OF THE ALIGNMENT.

*** EXIST RAMP C ℄ IS THE SAME AS THE RAMP C SURVEY & CONSTRUCTION ℄ SHOWN ON ADOT R/W PLANS NO. IR-10-4-801.

⑥ I-8 EXIST EAST BOUND ℄ CURVE DATA	⑦ I-8 EXIST EAST BOUND ℄ CURVE DATA
PI 3370+30.32 ← 3240	PI 3387+04.25 ← 3241
Δ=08°00'00" LT	Δ=17°16'08" RT
D=01°00'00"	D=01°00'00"
T=400.65'	T=870.04'
L=800.00'	L=1726.89'
R=5729.58' ← 3038	R=5729.58' ← 3041

① I-10 MEDIAN ℄ CURVE DATA	⑤ EXIST RAMP C ℄ CURVE DATA
PI 2852+94.05 ← 3235	PI 52+57.98 ← 3239
Δ=49°33'28" LT	Δ=38°02'45" LT
D=1°00'00"	D=03°15'00"
T=2644.87'	T=607.82'
L=4955.77'	L=1170.64'
R=5729.58' ← 3013	R=1762.95' ← 3061

NOTE: SEE SHEETS RS-18 TO RS-20 FOR SECTION CORNER DETERMINATIONS

NOTE: DUE TO GROSS DIFFERENCES BETWEEN THE SECTION CORNER TIES IN THE ADOT R/W DEEDS AND EXISTING R/W MONUMENTS IN THE AREA THE SECTION TIE INFORMATION IN THE DEEDS FOR THE I-10/I-8 INTERCHANGE WERE NOT USED. THE ADOT R/W WAS ANALYZED AND PLACED AS A BEST FIT TO THE EXISTING ADOT R/W MONUMENTS AND CENTERLINES IN THE AREA.

LEGEND

302 Set Monument
300 Found Monument
S.F.N.F. Searched For Not Found
301 Calculated position
Existing ADOT R/W monument

CHANGE ORDER REVISIONS

C.O. NO.	DATE	BY	DESCRIPTION OF REVISIONS

DRAWING NO.	D-11-T-487
SURVEY	Oct.-Dec. 2009
DRAWN/DATE	MGB Oct. 2010
ADOT REVIEW	S. McLain
ROUTE NO.:	I-10
LOCATION:	Val Vista Rd. to Junction I-8

RBF CONSULTING — PLANNING • DESIGN • CONSTRUCTION — 16605 NORTH 28TH AVENUE, SUITE 100, PHOENIX, ARIZONA 85032-2002, 602.467.2200 • FAX 602.467.2201, www.RBF.com

ARIZONA DEPARTMENT OF TRANSPORTATION
INTERMODAL TRANSPORTATION DIVISION
RIGHT OF WAY PLANS SECTION

HIGHWAY NAME: PHOENIX - CASA GRANDE
FEDERAL AID NO.: UNASSIGNED
PROJECT NO.: 010 PN 188 H7585 01R

REGISTERED LAND SURVEYOR — CERTIFICATE NO. 42945 — CHAD E. WOOLGAR — 6/8/12 — ARIZONA, U.S.A. — Expires 6/30/14

SHEET RS-14

6/8/2012 12:03:32 PM H:\PDATA\51D4363\CADD\MAPPING\RDS\010RW188_RS-14.DGN

RESULTS OF SURVEY

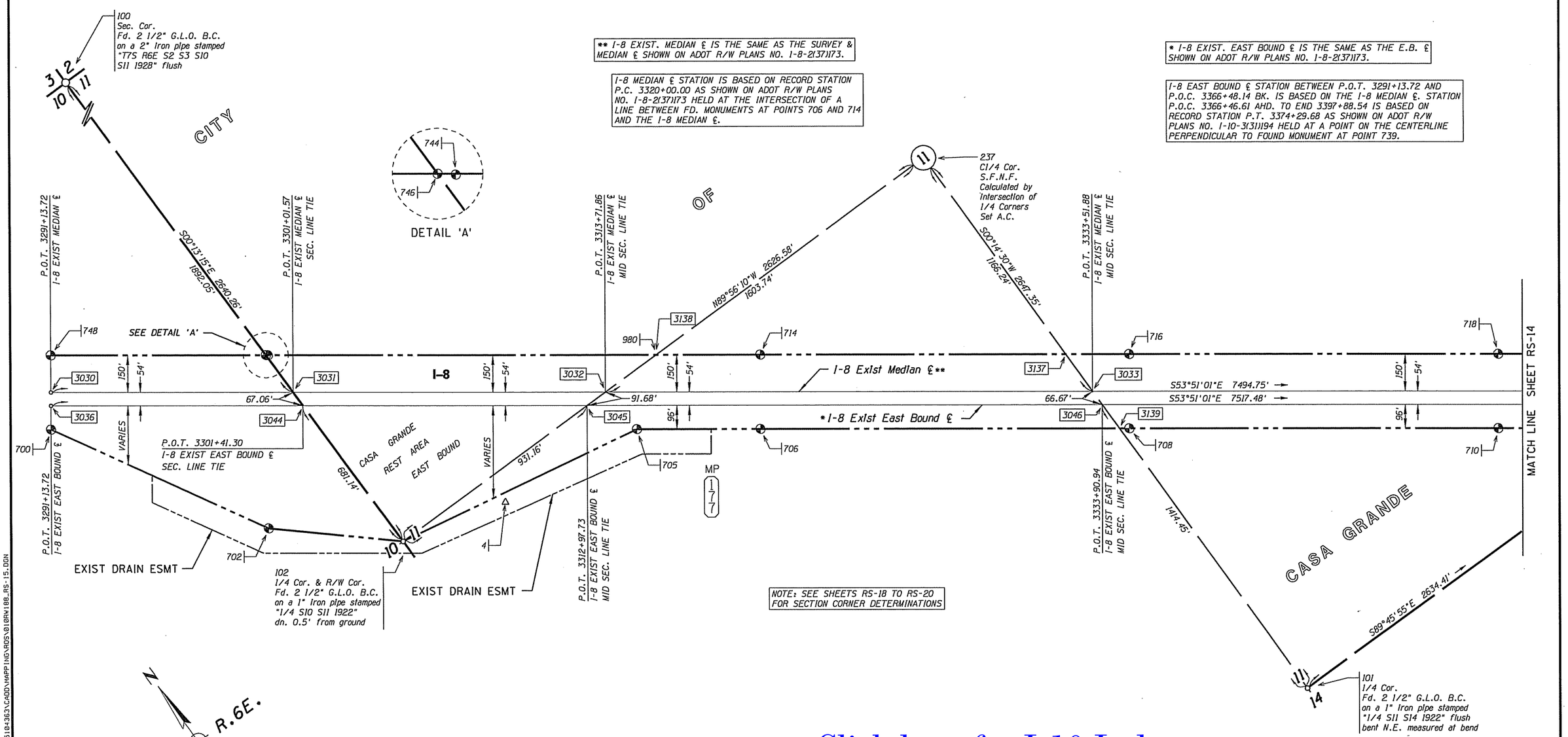

Click here for I-10 Index

0 100 200
Scale

010RW188_RS-15.DGN

LEGEND

302 Set Monument
300 Found Monument
301 Calculated position
Existing ADOT R/W monument
S.F.N.F. Searched For Not Found

CHANGE ORDER REVISIONS			
C.O. NO.	DATE	BY	DESCRIPTION OF REVISIONS

DRAWING NO.	D-11-T-487
SURVEY	Oct.-Dec. 2009
DRAWN/DATE	MGB Oct. 2010
ADOT REVIEW	S. McLain
ROUTE NO.:	I-10
LOCATION:	Val Vista Rd. to Junction I-8

RBF CONSULTING
PLANNING • DESIGN • CONSTRUCTION
16605 NORTH 28TH AVENUE, SUITE 100
PHOENIX, ARIZONA 85032-2003
602.467.2200 • FAX 602.467.2201
www.RBF.com

ARIZONA DEPARTMENT OF TRANSPORTATION
INTERMODAL TRANSPORTATION DIVISION
RIGHT OF WAY PLANS SECTION

HIGHWAY NAME: PHOENIX - CASA GRANDE
FEDERAL AID NO.: UNASSIGNED
PROJECT NO.: 010 PN 188 H7585 01R

REGISTERED LAND SURVEYOR
CERTIFICATE NO. 42945
CHAD E. WOOLGAR
6/8/12
ARIZONA, U.S.A.
Expires 6/30/14

SHEET RS-15

6/8/2012 12:03:47 PM H:\PDRTAV45104363\CADD\MAPPING\RDS\010RW188_RS-15.DGN

RESULTS OF SURVEY

GENERAL NOTES

THREE NGS CONTROL STATIONS WERE USED TO ESTABLISH THE CONTROL BASELINE FOR THIS SURVEY AND THEY ARE AS FOLLOWS:

AH 48 (PID CZ1512) NAD 83 (1992) 32°49'15.66526" (N) 111°41'19.64657" (W)
GRID COORDINATES N 662489.90 E 770001.72
GROUND COORDINATES (Pt. 12) N 662595.90076 E 770124.91690

VAL (PID CZ1390) NAD 83 (1992) 32°56'45.79278 (N) 111°42'25.76872 (W)
GRID COORDINATES N 707968.32 E 764269.11
GROUND COORDINATES (Pt. 9) N 708081.59121 E 764391.39667

VISTA (PID CZ1384) NAD 83 (1992) 32°58'23.04255 (N) 111°43'43.90375 (W)
GRID COORDINATES N 717783.98 E 757593.58
GROUND COORDINATES (Pt. 6) N 717898.82619 E 757714.79529

THE FOLLOWING PARAMETERS WERE SET FOR THE BASIS OF THIS SURVEY:

SYSTEM: UNITED STATES STATE PLANE 1983
ZONE: ARIZONA CENTRAL 0202
DATUM: NORTH AMERICAN 1983 (CONUS) EQUIVALENT TO WGS-84
GEOID MODEL: GEOID99 (CONTINENTAL US)
UNITS = INTERNATIONAL FEET (1 FOOT=0.3048 METERS EXACTLY)

DIRECT SATELLITE MEASUREMENTS WERE MADE ON EACH POINT ON THE NORTH AMERICAN DATUM OF 1983 WITH AUTOMATIC TRANSLATIONS MADE TO THE STATE PLANE GRID SYSTEM.

GPS CALIBRATION AND TRANSLATION TO THE SURFACE WAS PERFORMED BY GPS SURVEY SOFTWARE. A GRID ADJUSTMENT FACTOR OF 1.00016 AND SCALE ORIGIN VALUES OF N=0.00, E=0.00, AS OBTAINED FROM ADOT R/W PROJECT NO. 010 PN 200 H7104 01R DRAWING NO. D-11-T-484 WERE USED FOR THE TRANSLATION TO THE SURFACE.

ALL BEARINGS ARE GRID BEARINGS, DISTANCES ARE GROUND DISTANCES AND COORDINATES ARE GROUND COORDINATES.

THE EXISTING ADOT R/W SHOWN ON THIS RESULTS OF SURVEY WAS BASED ON AN OBSERVATION AND EVALUATION OF PHYSICAL CORROBORATING EVIDENCE IN THE FIELD AND A REVIEW AND ANALYSIS OF EXISTING R/W PLANS, MAPS AND R/W TITLE DOCUMENTS AVAILABLE AT THE TIME THE SURVEY WAS PREPARED; AND MAY NOT REFLECT PRIOR OR PENDING ADOT DISPOSALS OR ACQUISITIONS THAT WERE NOT SHOWN ON SAID PLANS AND DOCUMENTS AT THE TIME THE SURVEY WAS PREPARED.

THIS RESULTS OF SURVEY IS ON FILE IN THE FILE ROOM OF THE RIGHT OF WAY PLANS SECTION OF THE ARIZONA DEPARTMENT OF TRANSPORTATION. 205 SOUTH 17TH AVE. MD 612E, PHOENIX, AZ 85007. (602) 712-7270 SEE ADOT R/W FILE COPY FOR THE MOST CURRENT ADDITIONS OR REVISIONS.

FOR ADDITIONAL INFORMATION ON SECTION CORNER DESCRIPTION, SEE CORNER RECOVERY SHEETS IN THE ADOT R/W PLANS SECTION RECORDS.

SEE EXISTING R/W EXHIBIT MAPS IN THE PROJECT CALCULATION BOOK.

ADOT RIGHT OF WAY PLANS AND AS-BUILTS

PROJECT NO.	DWG NO.	ADOT TRACS NO.	DESCRIPTION	DATE
- - -	A-11-T-271	- - -	CASA GRANDE - SACATON HWY.	1944
F-152	A-11-T-311	- - -	CASA GRANDE - PICACHO HWY.	1952
F-014-1(2)	- - -	- - -	AS-BUILT PLANS	1960
I-10-3(31)194/I-10-4(45)199	C-11-T-406A	- - -	FLORENCE BLVD. - JCT. I-8	1961
S-251-701	C-11-T-392	- - -	CASA GRANDE - LA PALMA HWY	1961
I-10-3(31)194	D-11-T-406	- - -	PHOENIX - CASA GRANDE HWY.	1962
I-10-3(43)187	C-11-T-402-A	- - -	VAL VISTA BLVD. - HWY. 287	1962
I-10-3(43)187	D-11-T-402	- - -	PHOENIX - CASA GRANDE HWY.	1962
I-10-4(45)199	D-11-T-407	- - -	CASA GRANDE - TUCSON	1962
I-8-2(37)173	D-11-T-401	- - -	YUMA - CASA GRANDE	1963
I-10-3(49)	- - -	- - -	AS-BUILT PLANS	1966
I-10-3(32)	- - -	- - -	AS-BUILT PLANS	1967
I-10-3(44)	- - -	- - -	AS-BUILT PLANS	1967
I-8-2(43)	- - -	- - -	AS-BUILT PLANS	1968
I-10-3(42)	- - -	- - -	AS-BUILT PLANS	1968
S-251-501	- - -	- - -	AS-BUILT PLANS	1969
F-021-1(11)	- - -	- - -	AS-BUILT PLANS	1969
I-8-2(47)	- - -	- - -	AS-BUILT PLANS	1971
F-014-1(5)	- - -	- - -	AS-BUILT PLANS	1974
S-251-702	D-11-T-427	- - -	WEAVER ROAD-ELEVEN MILE CORNER ROAD UNIT I	1977
RS-251(3)	- - -	- - -	AS-BUILT PLANS	1980
S-251-504	- - -	- - -	AS-BUILT PLANS	1987
IR-10-4-801	D-11-T-457	10 PN 200 H0153 03R	SUNLAND GIN ROAD T.I.	1990
S-251-504	- - -	- - -	AS-BUILT PLANS	1992
IR-10-4(101)	- - -	H0153 04C	AS-BUILT PLANS	1993
M-950-4-704	D-11-T-469	084 PN 178 H2981 01R	CASA GRANDE URBAN AREA	1996
I-010-C-800	D-11-T-473	010 PN 198 H5487 01R	SR-84 (CASA GRANDE) T.I.	2001
I-10-C-509	- - -	H5487 01C	AS-BUILT PLANS	2002
STP-387-A-(002)A	- - -	H4367 01C	AS-BUILT PLANS	2003
287 PN 117 H7059 01R	D-11-T-483	- - -	I-10 & FLORENCE BLVD. (SR 287)	2009

RBF SURVEY CONTROL POINTS

The points shown below were used to establich local secondary project control, based on the control stations shown in the general notes.

PT.	NORTHING	EASTING	DESCRIPTION
1	694651.61687	770307.21943	HAY RM 2
2	673420.95647	775285.06875	AJ 46
4	665214.01438	765386.15730	BM 4
5	681370.00195	763820.75661	SIERRA

Click here for I-10 Index

CHANGE ORDER REVISIONS

C.O. NO.	DATE	BY	DESCRIPTION OF REVISIONS

DRAWING NO.	D-11-T-487
SURVEY	Oct.-Dec. 2009
DRAWN/DATE	MGB Oct. 2010
ADOT REVIEW	S. McLain
ROUTE NO.:	I-10
LOCATION:	Val Vista Rd. to Junction I-8

RBF CONSULTING — PLANNING • DESIGN • CONSTRUCTION
15005 NORTH 28TH AVENUE, SUITE 100
PHOENIX, ARIZONA 85032-2002
602.407.2200 • FAX 602.407.2201
www.RBF.com

ARIZONA DEPARTMENT OF TRANSPORTATION
INTERMODAL TRANSPORTATION DIVISION
RIGHT OF WAY PLANS SECTION

HIGHWAY NAME: PHOENIX - CASA GRANDE
FEDERAL AID NO.: UNASSIGNED
PROJECT NO.: 010 PN 188 H7585 01R

REGISTERED LAND SURVEYOR — CERTIFICATE NO. 42945 — CHAD E. WOOLGAR — 6/8/12 — Date Signed — ARIZONA, U.S.A. — Expires 6/30/14

SHEET RS-16

010RW188_RS-16.DGN

6/8/2012 12:04:48 PM H:\PDATA\45104353\CADD\MAPPING\ROS\010RW188_RS-16.DGN

RESULTS OF SURVEY

PUBLIC INFORMATION USED IN PREPARATION OF SURVEY

PINAL COUNTY RECORDER'S OFFICE

	SEC.	TWP.	RNG.	BOOK/CAB.	PAGE/SLIDE	DESCRIPTION
	1	6S	6E	1	80	SANTA ROSA FARMS
	1	6S	6E	1	85	RESULTS OF SURVEY
	1	6S	6E	11	89	RECORD OF SURVEY
	1	6S	6E	18	101	MINOR LAND DIVISION-RECORD OF SURVEY
	1	6S	6E	19	33	RECORD OF SURVEY OF MINOR LAND DIVISION
	1	6S	6E	8	299	RECORD OF SURVEY MINOR LAND DIVISION
	1	6S	6E	9	16	RECORD OF SURVEY MINOR LAND DIVISION
*	3	6S	6E	G	29	MISSION RANCH FINAL PLAT
	3	6S	6E	10	259	RECORD OF SURVEY
	3	6S	6E	22	156	BOUNDARY SURVEY
	11	6S	6E	16	206	RECORD OF SURVEY MINOR LAND DIVISION
	11	6S	6E	17	179	LAND TITLE SURVEY
	11	6S	6E	5	241	MINOR LAND DIVISION
	11	6S	6E	6	20	RECORD OF SURVEY
	12	6S	6E	11	51	RECORD OF SURVEY
	12	6S	6E	11	86	RECORD OF SURVEY
	12	6S	6E	11	167	RECORD OF SURVEY MINOR LAND DIVISION
	12	6S	6E	11	298	RECORD OF SURVEY MINOR LAND DIVISION
	12	6S	6E	9	132	RECORD OF SURVEY
	13	6S	6E	3	199	RECORD OF SURVEY
	13	6S	6E	8	121	RECORD OF SURVEY
	14	6S	6E	13	169	RECORD OF SURVEY
*	23	6S	6E	C	85	PALM CREEK GOLF & RV RESORT
*	23	6S	6E	C	112	PALM CREEK GOLF & RV RESORT
	23	6S	6E	11	156	RESULTS OF SURVEY
	23	6S	6E	12	103	RESULTS OF SURVEY
	23	6S	6E	13	69	RECORD OF SURVEY
	23	6S	6E	14	147	RESULTS OF SURVEY
	23	6S	6E	14	278	RESULTS OF SURVEY
	23	6S	6E	17	11	RESULTS OF SURVEY
	23	6S	6E	17	169	AN AMENDED RESULTS OF SURVEY
	23	6S	6E	23	129	RECORD OF SURVEY MINOR LAND DIVISION
*	24	6S	6E	H	95	PROMENADE AT CASA GRANDE
*	24	6S	6E	H	96	ED2 AT THE PROMENADE AT CASA GRANDE
*	24	6S	6E	G	159	PROMENADE AT CASA GRANDE
*	24	6S	6E	H	95	PROMENADE AT CASA GRANDE
*	24	6S	6E	H	96	ED2 AT THE PROMENADE AT CASA GRANDE
*	25	6S	6E	D	184	MISSION ROYALE BLOCK H
*	25	6S	6E	D	185	MISSION ROYALE BLOCK I
*	25	6S	6E	E	25	MISSION ROYALE BLOCK G FINAL PLAT
*	25	6S	6E	E	66	CASA GRANDE BUSINESS PARK III
*	25	6S	6E	F	72	MISSION ROYALE BLOCK M
*	25	6S	6E	F	159	MISSION PARKWAY OF MISSION ROYALE
*	25	6S	6E	F	178	PORTIONS OF FLORENCE BOULEVARD & HACIENDA RD
*	25	6S	6E	G	14	MISSION ROYALE PHASE 2 BLK G-I
*	25	6S	6E	G	15	MISSION ROYALE PHASE 2 BLK F FINAL PLAT
*	25	6S	6E	G	109	MISSION ROYALE PHASE 2 BLK D
*	25	6S	6E	G	111	MISSION ROYALE BLOCK A
*	25	6S	6E	G	190	MISSION ROYALE PHASE 2 BLOCK C
*	25	6S	6E	H	81	MISSION ROYALE PHASE 3 PCL 4
*	25	6S	6E	G	65	MISSION ROYALE PHASE 2 BLOCK E
	25	6S	6E	23	223	MINOR LAND DIVISION
*	26	6S	6E	B	48	CASA GRANDE MERCADO
*	26	6S	6E	B	124	CASA GRANDE MERCADO ADDITION
*	26	6S	6E	C	70	CASA GRANDE MERCADO 2ND ADDITION
*	26	6S	6E	C	71	CASA GRANDE MERCADO 2ND ADDITION
*	26	6S	6E	G	25	TUSCANY FINAL PLAT
*	26	6S	6E	H	32	CAMINO MERCADO
	26	6S	6E	19	38	ALTA/ACSM LAND TITLE SURVEY
	26	6S	6E	2	336	ALTA/ACSM LAND TITLE SURVEY
	26	6S	6E	22	206	RECORD OF SURVEY
	35	6S	6E	11	155	RESULTS OF SURVEY
	35	6S	6E	19	185	RECORD OF SURVEY EARLEY & HENNESS
	35	6S	6E	19	299	RECORD OF SURVEY
*	36	6S	6E	H	91	MISSION ROYALE PHASE 3 PCL 6B
*	36	6S	6E	F	159	MISSION PARKWAY OF MISSION ROYALE
*	36	6S	6E	F	160	EARLEY ROAD OF MISSION ROYALE
*	36	6S	6E	F	178	PORTIONS OF FLORENCE BOULEVARD & HACIENDA RD
*	36	6S	6E	G	30	MISSION ROYALE PHASE 3 PARCEL 2
*	36	6S	6E	G	31	MISSION ROYALE PHASE 3 PARCEL 3
*	36	6S	6E	G	36	MISSION ROYALE PHASE 3 PARCEL 1
*	36	6S	6E	G	60	MISSION ROYALE PHASE 3 PARCEL 7
*	36	6S	6E	H	80	MISSION ROYALE PHASE 3 PCL 6A

PUBLIC INFORMATION USED IN PREPARATION OF SURVEY CONTINUED

PINAL COUNTY RECORDER'S OFFICE

	SEC.	TWP.	RNG.	BOOK/CAB.	PAGE/SLIDE	DESCRIPTION
*	36	6S	6E	H	81	MISSION ROYALE PHASE 3 PCL 4
*	36	6S	6E	H	82	MISSION ROYALE PHASE 3 PCL 5
*	36	6S	6E	H	91	MISSION ROYALE PHASE 3 PCL 6B
*	1	7S	6E	B	49	TANGER OUTLET CENTER AT CASA GRANDE
	1	7S	6E	15	195	RECORD OF SURVEY MINOR LAND DIVISON
	1	7S	6E	21	168	RECORD OF SURVEY
	1	7S	6E	5	169	RESULTS OF SURVEY
*	2	7S	6E	4	16	MOUNTAIN VIEW ESTATES UNIT 01
	2	7S	6E	2	88	SOUTHERN PACIFIC PIPELINE
	2	7S	6E	13	186	RECORD OF SURVEY
	2	7S	6E	15	254	RECORD OF SURVEY
	2	7S	6E	2	88	RECORD OF SURVEY
*	3	7S	6E	17	16	VILLA VERDE SUBDIVISION
*	3	7S	6E	17	16	VILLA VERDE LOTS 1 THRU 91
*	3	7S	6E	A	35	VILLA VERDE SUBDIVISION
*	3	7S	6E	A	82	VILLA VERDE SUBDIVISION AMENDED
	3	7S	6E	14	232	RECORD OF SURVEY MINOR LAND DIVISION
	3	7S	6E	2	88	RECORD OF SURVEY
	10	7S	6E	12	255	RESULTS OF SURVEY
	10	7S	6E	23	87	ALTA/ACSM & TOPOGRAPHIC SURVEY
	10	7S	6E	5	273	RECORD OF SURVEY
	11	7S	6E	23	87	ALTA/ACSM & TOPOGRAPHIC SURVEY
	11	7S	6E	23	145	RECORD OF SURVEY
*	12	7S	6E	15	31	JUNCTION CITY (ABAND)
	12	7S	6E	2	216	RESULTS OF SURVEY
	12	7S	6E	5	169	RESULTS OF SURVEY
*	13	7S	6E	15	44	MOUNTAIN VIEW ESTATES UNIT 01
	13	7S	6E	11	293	RECORD OF SURVEY
	13	7S	6E	13	32	RECORD OF SURVEY
	13	7S	6E	18	67	RECORD OF SURVEY MINOR LAND DIVISION
	13	7S	6E	19	169	RECORD OF SURVEY INTERSTATE 10 & HANNA RD
	13	7S	6E	21	233	RECORD OF SURVEY
	13	7S	6E	22	147	RECORD OF BOUNDARY SURVEY
	13	7S	6E	22	276	RECORD OF SURVEY
	13	7S	6E	23	40	RESULTS OF SURVEY
	13	7S	6E	23	170	RECORD OF SURVEY
	13	7S	6E	3	48	RESULTS OF SURVEY
	13	7S	6E	3	234	RECORD OF SURVEY
	13	7S	6E	4	277	RECORD OF SURVEY
	13	7S	6E	4	278	RECORD OF SURVEY
	13	7S	6E	7	129	RECORD OF SURVEY
	13	7S	6E	8	131	RECORD OF SURVEY MINOR LAND DIVISION
	13	7S	6E	8	149	RECORD OF SURVEY
	13	7S	6E	9	147	RECORD OF SURVEY
	14	7S	6E	20	35	RECORD OF SURVEY MINOR LAND DIVISION
	14	7S	6E	22	243	RECORD OF SURVEY
	14	7S	6E	5	109	RECORD OF SURVEY
	7	6S	7E	1	96	RESULTS OF SURVEY
	7	6S	7E	23	167	RECORD OF SURVEY
	7	6S	7E	3	268	AMENDED MINOR LAND DIVISION
	7	6S	7E	3	440	MINOR LAND DIVISION
	7	6S	7E	3	495	RECORD OF SURVEY
	7	6S	7E	3	533	RECORD OF SURVEY
	7	6S	7E	4	90	RECORD OF SURVEY
	7	6S	7E	5	198	MINOR LAND DIVISION
	7	6S	7E	8	123	RECORD OF SURVEY

UNLESS OTHERWISE NOTED ALL PUBLIC INFORMATION IS LOCATED IN PINAL COUNTY BOOK OF SURVEYS.
*REFERS TO PUBLIC INFORMATION LOCATED IN PINAL COUNTY BOOK OF MAPS.

GLO & BLM PLATS

PLAT NO.	DESCIRPTION	DATE
1685	T.6S. R.6E. Dependent Resurvey of Subdivision	1930
1686	T.6S. R.6E. Original Subdivision Survey	1890
1687	T.6S. R.7E. Dependent Resurvey of Subdivision	1930
1688	T.6S. R.7E. Original Subdivision Survey	1890
1735	T.7S. R.6E. Dependent Resurvey of Subdivision	1930
1736	T.7S. R.6E. Completion Survey	1924
1737	T.7S. R.6E. Original Subdivision Survey	1890
1738	T.7S. R.7E. Dependent Resurvey of Subdivision	1930
1739	T.7S. R.7E. Original Subdivision Survey	1890

GLO & BLM FIELD NOTES

BOOK	PAGES	DATE
3572	3, 6, 8, 9, 10, 11, 15, 17, 18	1922
3841	9-12, 42-45, 47	1928
3842	14-16, 45, 47-50	1928
3844	8, 15-20	1928
3845	9-19	1928

UNRECORDED RECORDS USED IN PREPARATION OF SURVEY

R.L.S. NO.	SEC.	TWP.	RNG.	COMPANY	DESCRIPTION	JOB NO.	DATE
31034	13 & 14	6S.	8E.	RBF Consulting	Casa Grande 761 A.L.T.A.	45-103137	4/18/2007
27233	2	7S.	8E.	J.G. Ellis Land Surveying	Sun West Land & Development, LTD. A.L.T.A.	19-35-03	5/19/2005
27233	2 & 3	7S.	6E.	J.G. Ellis Land Surveying	PC288S, L.L.C. A.L.T.A.	19-35-04	9/26/2005
- -	11 & 12	7S.	6E.	Southern Pacific Company	Right of Way and Track Map	V-12-18	- -

MISCELLANEOUS MONUMENTATION

PT.	NORTHING	EASTING	DESCRIPTION
105	667979.46807	770243.65893	2" CONC HOLE W/ NO CAP DN. 0.1'
143	691897.91514	770457.14436	1/2" REBAR W/ NO ID. FLUSH
144	691898.31831	770357.09773	1/2" REBAR W/ NO ID. FLUSH
166	689238.92187	772985.86711	PK NAIL W/ NO ID. FLUSH
181	697178.05214	775692.40617	1 1/2" REBAR W/ TAG STAMPED "ACCEPTED BY RLS 37512" DN. 0.6' BENT W.
191	697195.84171	773023.00947	1/2" REBAR W/ TAG STAMPED "N 7231.04450 E 10022.62550 Z 1409.260" UP 0.2'
202	678640.43000	770618.03691	CHISELED X IN CONC.
203	675973.54054	770242.99295	1 1/2" A.C.
217	678619.48096	767609.09985	1" IRON PIPE W/ NO ID. DN. 0.7'
221	678619.01769	767598.90234	1/2" REBAR W/ NO ID. DN. 0.3'
657	698540.09967	770363.49331	5/8" REBAR W/ PLASTIC CAP STAMPED "L.S. 17288" UP 0.2'
658	698540.14923	770362.55904	1/2" REBAR W/ TAG STAMPED "L.S. 29873" UP 0.3'
659	698540.52660	770363.34449	5/8" REBAR W/ NO ID. FLUSH
970	666323.37493	771573.29669	1/2" REBAR W/ NO ID. UP 0.7'
971	665307.22583	772960.62300	1/2" REBAR W/ PLASTIC CAP STAMPED "L.S. 35833" UP 0.1'
974	664727.06575	773755.94407	1/2" REBAR W/ PLASTIC CAP STAMPED "L.S. 35833" UP 0.1'
975	664119.29824	774588.97598	1/2" REBAR W/ PLASTIC CAP STAMPED "L.S. 35833" UP 0.1'
977	659564.93932	773617.09887	1/2" REBAR W/ PLASTIC CAP STAMPED "L.S. 38001" UP 0.2'
1115	683852.15908	772922.96183	8" STEEL PIPE NO ID. DN. 0.8'
2185	660041.32579	772902.40387	1/2" REBAR W/ NO ID DN 0.3'
55000	691897.07978	770323.12083	2" IRON PIPE NO ID DN 1.6'

Click here for I-10 Index

CHANGE ORDER REVISIONS

C.O. NO.	DATE	BY	DESCRIPTION OF REVISIONS

DRAWING NO.	D-11-T-487
SURVEY	Oct.-Dec. 2009
DRAWN/DATE	MGB Oct. 2010
ADOT REVIEW	S. McLain

RBF CONSULTING — PLANNING • DESIGN • CONSTRUCTION
16605 NORTH 28TH AVENUE, SUITE 100
PHOENIX, ARIZONA 85032-2003
602.467.2200 • FAX 602.467.2201
www.RBF.com

ARIZONA DEPARTMENT OF TRANSPORTATION
INTERMODAL TRANSPORTATION DIVISION
RIGHT OF WAY PLANS SECTION

HIGHWAY NAME: PHOENIX - CASA GRANDE
FEDERAL AID NO.: UNASSIGNED
PROJECT NO.: 010 PN 188 H7585 01R
ROUTE NO.: I-10
LOCATION: Val Vista Rd. to Junction I-8

REGISTERED LAND SURVEYOR CERTIFICATE NO. 42945 CHAD E. WOOLGAR 6/8/12 ARIZONA, U.S.A. Expires 6/30/14

SHEET RS-17

010RW188_RS-17.DGN

H:\PDATA\45184363\CADD\MAPPING\ROS\010RW188_RS-17.DGN 12:06:20 PM 6/8/2012

RESULTS OF SURVEY

SECTION CORNERS

PT.	NORTHING	EASTING	DESCRIPTION	DETERMINATION
100	667971.91909	764946.29832	G.L.O. B.C.	Accepted as original G.L.O. position as set in the 1928 resurvey and described in G.L.O. notes Volume 3844.
101	662681.42812	767571.89902	G.L.O. B.C.	Accepted as original G.L.O. position as set in the 1922 resurvey and described in G.L.O. notes Volume 3572.
102	665331.68047	764956.47774	G.L.O. B.C.	Accepted as original G.L.O. position as set in the 1922 resurvey and described in G.L.O. notes Volume 3572.
103	662693.29855	764932.32481	G.L.O. B.C.	Accepted as original G.L.O. position as set in the 1922 resurvey and described in G.L.O. notes Volume 3572.
104	667975.28833	767594.21774	1 1/2" A.C.	Found A.C. within 0.25' of G.L.O. record distance from found G.L.O. offline witness corners (Pt. 110 & 111). Accepted as original G.L.O. position.
106	667979.69007	770241.98945	CHISELED X IN CONC.	Accepted Chiseled X based on substantial agreement with tie to highway centerline to the east and railroad centerline tie to the southeast as depicted on ADOT R/W Plans Project No. I-10-3(31)194 Drawing No. D-11-T-406, records recorded at Cabinet B of maps Slide 49 & Bk. 23 Pg. 145 and unrecorded ALTA by L.S. 27233 Job No. 19-35-03 in 2005 who set the current chiseled X by double proportion. This position does not agree with records recorded at Bk. 5 Pg. 169, Bk. 13 Pg. 186, Bk. 21 Pg. 168, Bk. 23 Pg. 87A, ADOT R/W Project No. M-950-4-704 Drawing No. D-11-T-469 and ADOT R/W Project No. I-010-C-800 Drawing No. D-11-T-473. These records accepted 1 of 3 other positions within 5' of the accepted current chiseled X as follows. The 1st rejected position is the chiseled X depicted on ADOT R/W Project No. M-950-4-704 which is not the same chiseled X recovered in this survey. The rejected chiseled X position is 5' east of the accepted current chiseled X position. The accepted current chiseled X reflects an older position as depicted on ADOT R/W Plans Project No. I-10-3(31)194. The 2nd rejected position is depicted on ADOT R/W Project No. I-010-C-800 and it appears to be calculated by double proportion using a monument at the south 1/4 corner of Section 2 that disagrees with found G.L.O. witness corners by 19'. The 3rd rejected position was set by L.S. 5713. We were unable to obtain a record for L.S. 5713. Per phone conversation with L.S. 27233, he stated that he had a copy of the survey by L.S. 5713 at the time he performed his own survey in 2005 and L.S. 5713 did not state how the cap was set. The position monumented by L.S. 5713 was not accepted because the corner had already been monumented once before and documented in ADOT R/W Plans Project No. I-10-3(31)194 Drawing No. D-11-T-406 and the records recorded at Cabinet B of maps Slide 49 & Bk. 23 Pg. 145 in which both records agree with the accepted current chiseled X position.
107	665325.81586	770226.83749	1" SQUARE IRON BAR	Found iron bar within 0.25' of G.L.O. record distance from found G.L.O. offline witness corners. Accepted as original G.L.O. position.
108	665295.86489	770256.95535	G.L.O. B.C. W.C.	Accepted as original G.L.O. offline witness corner as set by the G.L.O. in the 1928 resurvey and described in G.L.O. notes Volume 3844.
109	665355.70254	770256.85022	G.L.O. B.C. W.C.	Accepted as original G.L.O. offline witness corner as set by the G.L.O. in the 1928 resurvey and described in G.L.O. notes Volume 3844.
110	668005.41693	767623.85733	G.L.O. B.C. W.C.	Accepted as original G.L.O. offline witness corner as set by the G.L.O. in the 1928 resurvey and described in G.L.O. notes Volume 3844.
111	668005.06520	767564.00900	1" CONC. FILLED IRON PIPE	Accepted as original G.L.O. offline witness corner as set by the G.L.O. in the 1928 resurvey and described in G.L.O. notes Volume 3844.
115	665343.65243	775621.28697	1" CONC. FILLED IRON PIPE	Accepted as original G.L.O. offline witness corner as set by the G.L.O. in the 1928 resurvey and described in G.L.O. notes Volume 3842.
116	665402.91386	775561.25646	G.L.O. B.C. W.C.	Accepted as original G.L.O. offline witness corner as set by the G.L.O. in the 1928 resurvey and described in G.L.O. notes Volume 3842.
117	668004.28961	772922.57563	5/8" REBAR	Found rebar is within 0.3' of record distance from G.L.O. offline witness corner (Pt. 118) and 0.48' southeast of calculated single proportion position. Said rebar agrees with all found records. Accepted rebar based on it's agreement with the G.L.O. offline witness corner. No evidence to the contrary was found.
118	667974.41194	772892.31331	1" CONC. FILLED IRON PIPE	Accepted as original G.L.O. offline witness corner as set in the 1928 resurvey and described in G.L.O. notes Volume 3844.
121	697211.64687	770355.64066	2 1/2" A.C.	Found aluminum cap as set during the survey recorded at Bk. 17 Pg. 179 to be in agreement with G.L.O. offline witness corners. Accepted as original G.L.O. position.
122	697241.77350	770385.14650	G.L.O. B.C. W.C.	Accepted as original G.L.O. offline witness corner as set by the G.L.O. in the 1928 resurvey and described in G.L.O. notes Volume 3845.
123	697181.70751	770385.41909	G.L.O. B.C. W.C.	Accepted as original G.L.O. offline witness corner as set by the G.L.O. in the 1928 resurvey and described in G.L.O. notes Volume 3845.
124	662670.63335	770206.28773	3/4" REBAR	Accepted rebar based on substantial agreement with all found records. No evidence to the contrary was found.
126	662720.45101	775576.85046	1" CONC. FILLED IRON PIPE	Found pipe agrees with position depicted in all found records despite character discrepancies. Position also agrees with found G.L.O. offline witness corners (Pt. 127 & 128) by 0.25'. Accepted as original G.L.O. corner as set and described in G.L.O. notes Volume R3842.
127	662690.79283	775607.10779	1" CONC. FILLED IRON PIPE	Accepted as original G.L.O. offline witness corner as set by the G.L.O. in 1928 and approved in field notes Volume 3842.
128	662750.54962	775606.84226	1" CONC. FILLED IRON PIPE	Accepted as remnants of the original G.L.O. offline witness corner as set by the G.L.O. in 1928 and approved in field notes Volume 3842.
129	668029.46919	775603.71713	G.L.O. B.C.	Accepted as original G.L.O. section corner as set by the G.L.O. in the 1928 resurvey with 2" iron pipe deposited along side (Pt. 130) and described in G.L.O. notes Volume 3842.
130	668029.67166	775603.91674	2" IRON PIPE	Accepted iron pipe as an accessory to the section corner being the local monument found and deposited along side the G.L.O. B.C. (Pt. 129) as described in the 1928 G.L.O. field notes Volume 3842.
131	668059.28202	775573.84477	G.L.O. B.C. W.C.	Accepted as original G.L.O. offline witness corner as set by the G.L.O. in the 1928 resurvey and described in G.L.O. notes Volume 3842.
132	667999.53254	775633.56126	G.L.O. B.C. W.C.	Accepted as original G.L.O. offline witness corner as set by the G.L.O. in the 1928 resurvey and described in G.L.O. notes Volume 3842.
133	668059.24064	775633.50729	2" A.C.	Accepted A.C. as an offline witness corner as set by L.S. 21780 during ADOT R/W Project No. I-010-C-800 Drawing No. D-11-T-473.
134	670679.96926	775573.08793	1" IRON PIPE	Found pipe to be within 0.35' of single proportion but did not find any records depicting the pipe being set by single proportion. The pipe is 1.33' longer than the record distance from found G.L.O. offline witness corner (Pt. 135). During our analysis of the found offline witness corners we found there to be up to 2' of variance from the G.L.O. record bearings and distances. At corner locations, such as this one, where only one G.L.O. offline witness corner was found we are unable to calculate a position with better accuracy than 2'. Due to the lack of decay and absence of concrete in the found pipe we do not think this is the monument set by the G.L.O. in G.L.O. notes Volume R3842. Accepted position of pipe as best available evidence and substantial agreement with the one found G.L.O. offline witness corner. No evidence to the contrary was found.
135	670711.49567	775543.00489	1" CONC. FILLED IRON PIPE	Accepted as original G.L.O. offline witness corner as set by the G.L.O. in the 1928 resurvey and described in G.L.O. notes Volume 3842.
136	673331.12540	775542.65053	1/2" REBAR	Searched for G.L.O. offline witness corners and Pinal County ties and found none. Found rebar is being used by all found records. Accepted as section corner based on best available evidence. No evidence to the contrary was found.
137	694585.86500	770309.23031	G.L.O. B.C. W.C.	Accepted as original G.L.O. offline witness corner as set by the G.L.O. in the 1928 resurvey and described in G.L.O. notes Volume 3845.
138	694555.91696	770338.96608	2" IRON PIPE	Iron pipe agrees with G.L.O. witness corner (Pt. 137) and 1 county tie from tie card #6-6-14E by C.B.M. dated 12-30-58. This is in disagreement with records recorded at Bk. 3 Pg. 199, Bk. 5 Pg. 241, Bk. 6 Pg. 20, Bk. 8 Pg. 121, Bk. 9 Pg. 132, Bk. 11 Pg. 51, Bk. 11 Pg. 86, Bk. 11 Pg. 167 Bk. 11 Pg. 298 and Bk. 13 Pg. 169. Monument depicted on surveys by others was not recovered during this survey. Accepted as original G.L.O. corner position.
139	694497.74853	770371.65270	NL W/ SHINER IN PP	Accepted as county tie as depicted on county tie card #6-6-14E by C.B.M. dated 12-30-58.
141	691898.70914	770324.03015	1/2" REBAR	Found rebar to be within 0.2' of record G.L.O. distance from G.L.O. offline witness corner (Pt. 142). Accepted as 1/4 corner position.
142	691928.40519	770353.95817	G.L.O. B.C. W.C.	Accepted as original G.L.O. offline witness corner as set by the G.L.O. in the 1928 resurvey and described in G.L.O. notes Volume 3845.
145	689240.98062	770309.25669	3" AZ. HWY. DEPT. B.C.	Found B.C. is believed to be the same position depicted on Pinal Co. tie card #6-6-23E by C.B.M. dated 1-7-59 where no original evidence was found and the position was double proportioned. Position was then reset during ADOT R/W Project No. I-10-3(43)187 Drawing No. D-11-T-402 from RP's that are assumed to be RP's from the Pinal Co. tie card. No Pinal Co. ties were found during this survey. No evidence to the contrary was found. Accepted as section corner.
146	686587.51373	770303.58292	2" B.C.	Found B.C. to be within 0.5' of record G.L.O. distances from G.L.O. offline witness corners (Pts 147 & 148). This Position agrees with all found records. Accepted as 1/4 corner position.
147	686557.87667	770332.98963	G.L.O. B.C. W.C.	Accepted as original G.L.O. offline witness corner as set by the G.L.O. in the 1928 resurvey and described in G.L.O. notes Volume 3845.
148	686617.42123	770333.20447	G.L.O. B.C. W.C.	Accepted as original G.L.O. offline witness corner as set by the G.L.O. in the 1928 resurvey and described in G.L.O. notes Volume 3845.
149	681258.93737	770309.96665	1" CONC. FILLED IRON PIPE	Accepted as original G.L.O. offline witness corner as set by the G.L.O. in the 1928 resurvey and described in G.L.O. notes Volume 3845.
150	681318.92178	770310.54738	G.L.O. B.C. W.C.	Accepted as original G.L.O. offline witness corner as set by the G.L.O. in the 1928 resurvey and described in G.L.O. notes Volume 3845.
151	681319.23884	770250.52112	G.L.O. B.C. W.C.	Accepted as original G.L.O. offline witness corner as set by the G.L.O. in the 1928 resurvey and described in G.L.O. notes Volume 3845.
152	681259.20991	770250.17606	G.L.O. B.C. W.C.	Accepted as original G.L.O. offline witness corner as set by the G.L.O. in the 1928 resurvey and described in G.L.O. notes Volume 3845.

TABLE CONTINUES ON SHEET RS-19

Click here for I-10 Index

CHANGE ORDER REVISIONS			
C.O. NO.	DATE	BY	DESCRIPTION OF REVISIONS

DRAWING NO.	D-11-T-487
SURVEY	Oct.-Dec. 2009
DRAWN/DATE	MGB Oct. 2010
ADOT REVIEW	S. McLain
ROUTE NO.:	I-10
LOCATION:	Val Vista Rd. to Junction I-8

RBF CONSULTING — PLANNING • DESIGN • CONSTRUCTION — 16605 NORTH 28TH AVENUE, SUITE 100, PHOENIX, ARIZONA 85032-2002 — 602.467.2200 • FAX 602.467.2201 — www.RBF.com

ARIZONA DEPARTMENT OF TRANSPORTATION
INTERMODAL TRANSPORTATION DIVISION
RIGHT OF WAY PLANS SECTION

HIGHWAY NAME: PHOENIX - CASA GRANDE

FEDERAL AID NO.: UNASSIGNED

PROJECT NO.: 010 PN 188 H7585 01R

REGISTERED LAND SURVEYOR — CERTIFICATE NO. 42945 — CHAD E. WOOLGAR — 6/8/12 — ARIZONA, U.S.A. — Expires 6/30/14

SHEET RS-18

010RW188_RS-18.DGN

H:\PDATA\451043S3\CADD\MAPPING\RDS\010RW188_RS-18.DGN 6/8/2012 12:07:06 PM

RESULTS OF SURVEY

SECTION CORNERS CONTINUED

PT.	NORTHING	EASTING	DESCRIPTION	DETERMINATION
153	683933.97236	770297.93372	3" AZ. HWY. DEPT. B.C.	Searched for G.L.O. offline witness corners and none were found. No Pinal Co. tie cards found during the research for this survey. We believe this is the perpetuation of the position depicted on ADOT R/W Project No. I-10-3(31)194 Drawing No. D-11-T-406 where the corner was established from RP's of some kind. Found records agree with this monument and position. No evidence to the contrary was found. Accepted as the Section corner.
154	683935.53360	772969.40649	3" B.C.	Searched for G.L.O. offline witness corners and Pinal Co. ties and none were found. Position and monument description agrees with found records. No evidence to the contrary was found. Accepted as 1/4 corner.
155	683935.94934	775639.53270	3 1/2" B.C. IN H.H.	Origin of brass cap is unknown. Searched for G.L.O. offline witness corners and county ties and none were found. No evidence to the contrary was found. Accepted as section corner.
156	686584.93837	775651.32111	1" IRON PIPE	Found iron pipe to be within 0.6' of record G.L.O. distances from G.L.O. offline witness corners (Pts 157 to 160). This Position agrees with all found records. Accepted as 1/4 corner position.
157	686555.20594	775621.18523	1" CONC. FILLED IRON PIPE	Accepted as original G.L.O. offline witness corner as set by the G.L.O. in the 1928 resurvey and described in G.L.O. notes Volume 3841.
158	686615.04998	775621.05400	1" CONC. FILLED IRON PIPE	Accepted as original G.L.O. offline witness corner as set by the G.L.O. in the 1928 resurvey and described in G.L.O. notes Volume 3841.
159	686554.92018	775680.40438	G.L.O. B.C. W.C.	Accepted as original G.L.O. offline witness corner as set by the G.L.O. in the 1928 resurvey and described in G.L.O. notes Volume 3841.
160	686614.79369	775680.31850	1" CONC. FILLED IRON PIPE	Accepted as original G.L.O. offline witness corner as set by the G.L.O. in the 1928 resurvey and described in G.L.O. notes Volume 3841.
161	689236.91911	775662.33503	1/2" REBAR	Found rebar as set from G.L.O. witness corners and depicted on county tie card by C.B.M. dated 12-29-58. Rebar was found within 0.25' of record G.L.O. distances from witness corners (Pt's 162 & 163). Accepted as original G.L.O. position.
162	689266.52284	775692.85512	1" CONC. FILLED IRON PIPE	Accepted as original G.L.O. offline witness corner as set by the G.L.O. in the 1928 resurvey and described in G.L.O. notes Volume 3841.
163	689206.39819	775691.85146	G.L.O. B.C. W.C.	Accepted as original G.L.O. offline witness corner as set by the G.L.O. in the 1928 resurvey and described in G.L.O. notes Volume 3841.
164	689239.43125	772987.93215	1/2" REBAR "LS 25396"	While this rebar does not agree with Pinal County ties (Pt. 165 & 167) depicted on county tie card "6-6-13W by C.B.M. dated 10-30-58 nor the G.L.O. offline witness corner (Pt. 167), it has been accepted and used by records recorded at Bk. 8 Pg. 121, Cabinet G, Slide 159, Cabinet H, Slide 95, ADOT Right of Way Plans Project No. 287 PN 117 H7059 01R Drawing No. D-11-T-483 and Document # 2005-024197 and is accepted as the 1/4 corner of local control so as to harmonize with previous boundary work in the area.
165	689269.04668	772985.37685	1" CONC. FILLED IRON PIPE	Found iron pipe is accepted as one of the original G.L.O. offline witness corner monuments that has been moved from the original G.L.O. position. Accepted iron pipe at it's new position as a Pinal County tie from county tie card "6-6-13W by C.B.M. dated 10-30-58.
167	689207.43435	772957.59144	1" CONC. FILLED IRON PIPE	Accepted as original G.L.O. offline witness corner as set by the G.L.O. in the 1928 resurvey and described in G.L.O. notes Volume 3845.
169	691875.70032	775674.73055	3/4" IRON PIPE	Found iron pipe as set from G.L.O. witness corners and depicted on county tie card by Scott Sarben dated 4-12-65. Iron pipe was found 0.33' away from intersection of G.L.O. witness corners. Accepted as original G.L.O. position.
170	691845.72214	775645.15654	G.L.O. B.C. W.C.	Accepted as original G.L.O. offline witness corner as set by the G.L.O. in the 1928 resurvey and described in G.L.O. notes Volume 3841.
171	691905.38502	775645.46939	G.L.O. B.C. W.C.	Accepted as original G.L.O. offline witness corner as set by the G.L.O. in the 1928 resurvey and described in G.L.O. notes Volume 3841.
172	691905.66435	775704.32235	1" CONC. FILLED IRON PIPE	Accepted as original G.L.O. offline witness corner as set by the G.L.O. in the 1928 resurvey and described in G.L.O. notes Volume 3841.
173	691845.92904	775705.02940	1" CONC. FILLED IRON PIPE	Accepted as original G.L.O. offline witness corner as set by the G.L.O. in the 1928 resurvey and described in G.L.O. notes Volume 3841.
174	694513.60568	775687.26749	1/2" REBAR	Monument and Position agrees with all founded records. Accepted rebar based on comon use and best available evidence of the corner position.
175	694534.57238	773011.78197	1/2" GALVANIZED PIPE	Found 1/2" galvanized pipe depicted on county tie card "6-6-12w dated 1959 by D.J. where the G.L.O. witness corner to the southwest and southeast were tied within 0.2' of record. Also found 3 county ties (points 176, 177 & 178) tying the 1/2" galvanized pipe as depicted on county tie card "6-6-12w dated 3-23-72. Accepted as original G.L.O. position as set in 1928 and described in G.L.O. notes Volume 3845.
176	694499.08607	773007.82054	NL W/ SHINER IN PP	Accepted as county tie as depicted on county tie card "6-6-12w dated 1959 by D.J.
177	694499.47940	772983.39957	NL W/ SHINER IN PP	Accepted as county tie as depicted on county tie card "6-6-12w dated 1959 by D.J.
178	694502.64858	772978.03480	NL W/ SHINER IN PP	Accepted as county tie as depicted on county tie card "6-6-12w dated 1959 by D.J.
179	691887.20650	772998.96943	2" A.C.	Found A.C. to be within 0.1' of the intersection of opposing 1/4 corners. Accepted as the center 1/4 corner.
180	697177.85913	775692.46659	1" STEEL BAR	Found 1" steel bar as set by J.W. Grifith on Pinal County tie card number 6-6-12Z where a 1" steel pin was set from 4 G.L.O. B.C. witness corners. Accepted as original G.L.O. position. Records recorded at Bk. 3 Pg. 268, Bk. 3 Pg. 440, Bk. 3 Pg. 495, Bk. 3 Pg. 533 and Bk. 23 Pg. 167 of surveys accepted a 1 1/2" rebar (Pt. 181) which was found 0.6' higher than, and 0.2' north of the accepted 1" steel bar.
182	697147.77169	775722.43243	1" CONC. FILLED IRON PIPE	Accepted as original G.L.O. offline witness corner as set by the G.L.O. in the 1928 resurvey and described in G.L.O. notes Volume 3841.
185	699874.91463	773034.31508	1/2" REBAR	Found 1/2" rebar to be within 0.3' of position calculated from accepted G.L.O. witness corners. Accepted as original G.L.O. position.
186	699904.56130	773004.27908	G.L.O. B.C. W.C.	Accepted as original G.L.O. offline witness corner as set by the G.L.O. in the 1928 resurvey and described in G.L.O. notes Volume 3845.
187	699904.95334	773063.89840	G.L.O. B.C. W.C.	Accepted as original G.L.O. offline witness corner as set by the G.L.O. in the 1928 resurvey and described in G.L.O. notes Volume 3845.
188	699845.25892	773064.14253	G.L.O. B.C. W.C.	Accepted as original G.L.O. offline witness corner as set by the G.L.O. in the 1928 resurvey and described in G.L.O. notes Volume 3845.
189	699845.19722	773004.18228	G.L.O. B.C. W.C.	Accepted as original G.L.O. offline witness corner as set by the G.L.O. in the 1928 resurvey and described in G.L.O. notes Volume 3845.
190	697194.75963	773023.00640	3/4" REBAR	Found rebar to be within 0.1' of the intersection of opposing 1/4 corners. Accepted as center 1/4 Corner.
195	678627.97782	775608.77683	3" CITY OF CASA GRANDE B.C.	Found B.C. at record distance from G.L.O. offline witness corner (Pt. 196) as described in G.L.O. notes Volume 3841. Position agrees with found records. Accepted as section corner.
196	678597.57161	775638.05365	1" CONC. FILLED IRON PIPE	Accepted as original G.L.O. offline witness corner as set in the 1928 resurvey and described in G.L.O. notes Volume 3841.
201	678641.36909	770263.09074	3" AZ. HWY. DEPT. B.C.	Found B.C. is accepted by all found records. Searched for G.L.O. offline witness corners and Pinal County ties and none were found. Accepted as section corner based on best available evidence.
204	675942.76240	770272.20656	G.L.O. B.C. W.C.	Accepted as original G.L.O. offline witness corner as set by the G.L.O. in the 1928 resurvey and described in G.L.O. notes Volume 3845.
205	676002.58180	770212.93540	G.L.O. B.C. W.C.	Accepted as original G.L.O. offline witness corner as set by the G.L.O. in the 1928 resurvey and described in G.L.O. notes Volume 3845.
206	673305.73999	770222.81792	3" AZ. HWY. DEPT. B.C.	Found B.C. agrees with all found records. Searched for G.L.O. offline witness corners and Pinal County ties and none were found. Accepted as section corner based on best available evidence. No evidence to the contrary was found.
207	670646.12471	770231.02125	1/2" REBAR	Found and accepted rebar as being set from 2 G.L.O. offline witness corners by L.S. 22258 as depicted on ADOT R/W Project No. I-010-C-800 Drawing No. D-11-T-473. Position also agrees with records recorded at Bk. 5 Pg. 169, Bk. 15 Pg. 195, and Bk. 21 Pg. 168. This position is in discrepancy with records recorded at Bk. 13 Pg. 186 and Bk. 23 Pg. 145 which depicts a position calculated from 1 G.L.O. offline witness corner 1.7' away after the accepted rebar was set.
208	670674.69433	770261.80222	G.L.O. B.C. W.C.	Accepted as original G.L.O. offline witness corner as set by the G.L.O. in the 1928 resurvey and described in G.L.O. notes Volume 3844.
209	673294.28614	767561.63870	REPLACED NAIL W/ A.C. "LS 42945"	Found nail to be within 0.35' of record G.L.O. distance from found G.L.O. offline witness corners (points 210 & 211). Accepted as original G.L.O. corner position as described in G.L.O. notes Volume 3844.
210	673323.60971	767531.67770	1" CONC. FILLED IRON PIPE	Accepted as original G.L.O. offline witness corner as set by the G.L.O. in the 1928 resurvey and described in G.L.O. notes Volume 3844.
211	673323.90284	767591.47121	1" CONC. FILLED IRON PIPE	Accepted as original G.L.O. offline witness corner as set by the G.L.O. in the 1928 resurvey and described in G.L.O. notes Volume 3844.
212	673318.50698	772882.84650	3/4" REBAR	Found rebar agrees with all found records and is within 0.33' of record distance from the one found G.L.O. offline witness corner (Pt. 213). Accepted rebar as original G.L.O. position as described in G.L.O. notes Volume 3844. No evidence to the contrary was found.

TABLE CONTINUES ON SHEET RS-20

Click here for I-10 Index

CHANGE ORDER REVISIONS			
C.O. NO.	DATE	BY	DESCRIPTION OF REVISIONS

DRAWING NO.	D-11-T-487
SURVEY	Oct.-Dec. 2009
DRAWN/DATE	MGB Oct. 2010
ADOT REVIEW	S. McLain
ROUTE NO.:	I-10
LOCATION:	Val Vista Rd. to Junction I-8

RBF CONSULTING — PLANNING • DESIGN • CONSTRUCTION, 16605 NORTH 28TH AVENUE, SUITE 100, PHOENIX, ARIZONA 85032-2602, 602.487.2200 • FAX 602.487.2201, www.RBF.com

ARIZONA DEPARTMENT OF TRANSPORTATION
INTERMODAL TRANSPORTATION DIVISION
RIGHT OF WAY PLANS SECTION

HIGHWAY NAME: PHOENIX - CASA GRANDE
FEDERAL AID NO.: UNASSIGNED
PROJECT NO.: 010 PN 188 H7585 01R

REGISTERED LAND SURVEYOR, CERTIFICATE NO. 42945, CHAD E. WOOLGAR, 6/8/12, ARIZONA, U.S.A., Expires 6/30/14

SHEET RS-19

010RW188_RS-19.DGN

6/8/2012 12:07:17 PM H:\PDATA\15104363\CADD\MAPPING\RDS\010RW188_RS-19.DGN

RESULTS OF SURVEY

SECTION CORNERS CONTINUED

PT.	NORTHING	EASTING	DESCRIPTION	DETERMINATION
213	673348.54409	772912.08302	1" CONC. FILLED IRON PIPE	Accepted as original G.L.O. offline witness corner as set by the G.L.O. in the 1928 resurvey and described in G.L.O. notes Volume 3844.
215	683922.20551	767651.75556	3" ADOT HWY. DIV. B.C. IN H.H.	Found ADOT B.C. is believed to be in the same position as the iron pin depicted on ADOT R/W Project No. I-10-3(43)187 Drawing No. D-11-T-402 in which the iron pin was set from RP's. It is unknown if these RP's are referring to the G.L.O. offline witness corners, Pinal County Ties or RP's set by others. Position agrees with all found records. Accepted as the 1/4 corner. No evidence to the contrary was found.
216	678619.00797	767606.18756	1/2" REBAR	Found 1/2" rebar to be within 0.66' of G.L.O. record distance from found G.L.O. offline witness corner (Pt. 220). Rebar also agrees with Pinal County ties from tie card 6-6-35C by Arthur T. Poor dated 4-16-81 and corrected by Norman on 12-24-86. This position agrees with all records listed hereon except surveys recorded at Bk. 19 Pg. 185, Bk. 19 Pg. 299 and Bk. 22 Pg. 206.
218	678650.36901	767590.60400	NL W/ SHINER IN PP	Accepted as county tie as depicted on county tie card 6-6-35C by Arthur T. Poor dated 4-16-81 and corrected by Norman on 12-24-86.
219	678650.37361	767634.75825	NL W/ SHINER IN PP	Accepted as county tie as depicted on county tie card 6-6-35C by Arthur T. Poor dated 4-16-81 and corrected by Norman on 12-24-86.
220	678648.51601	767576.74891	1" CONC. FILLED IRON PIPE	Accepted as original G.L.O. offline witness corner as set by the G.L.O. in the 1928 resurvey and described in G.L.O. notes Volume 3845.
222	689233.78944	767648.36706	3" CITY OF CASA GRANDE B.C.	All found records agree with this position except records recorded in Cabinet C Slide 85 and Cabinet C Slide 112. These two records depict the 1/4 corner being calculated at a single proportion and rejected a found 1/2" pin 0.15' N. X 0.98' W. The rejected 1/2" iron pin depicted in these two maps matches the position of the found Casa Grande B.C. Found B.C. is 1' short of record distance from G.L.O. offline witness corner (Pt. 223). Unable to determine if this position was derived from more than one of the G.L.O. offline witness corners that may have been present at the time the B.C. position was first monumented. Therefore, we accepted the B.C. position over the single proportion position depicted in said records because the single proportion position was calculated despite the 1/4 corner being monumented 1' away. Accepted as 1/4 corner based on best available evidence and agreement with G.L.O. offline Witness corner (Pt.223) by 1'.
223	689204.16168	767619.57186	1" CONC. FILLED IRON PIPE	Accepted as original G.L.O. offline witness corner as set by the G.L.O. in the 1928 resurvey and described in G.L.O. notes Volume 3845.
227	681289.01782	770280.31317	SET A.C. "LS 37174"	Calculated position at intersection of G.L.O. offline witness corners.
229	686586.22547	772978.66493	SET A.C. "LS 37174"	Searched for, nothing found. Calculated at intersection of 1/4 corners.
230	681281.43901	775624.07452	SET A.C. "LS 37174"	Searched for, nothing found. No county ties available. Searched for G.L.O. offline witness corners and none were found. Recorded records indicate that a 1/2" rebar had been found 0.53' south of the calculated single proportion position. Reestablished 1/4 corner per record recorded at Cabinet G Slide 15 of subdivisions. No evidence to the contrary was found.
231	678634.30092	772934.63284	(C)	Searched for, nothing found. No county ties available, searched for G.L.O. offline witness corners and none were found. Recorded records indicate that a 1/2" rebar had been found 1.35' southwest of the calculated single proportion position. Reestablished 1/4 corner per record recorded at Cabinet F Slide 160 of subdivisions. No evidence to the contrary was found.
232	681285.22866	772952.02171	SET A.C. "LS 37174"	Searched for, nothing found. Calculated at intersection of 1/4 corners. No evidence to the contrary was found.
233	675978.93378	775574.95033	SET A.C. "LS 37174"	Searched for, nothing found. All found records had accepted a 1/2" rebar which at one time was tagged "L.S. 5713". This position is 1.0' southwest of the calculated single proportion position. Calculated position per recorded record at Cabinet F Slide 159 of subdivisions. No evidence to the contrary was found.
234	675972.67210	770242.57098	SET A.C. "LS 37174"	Calculated position at mid point between the two found G.L.O. offline witness corners. Found A.C. (Pt. 203) was within 0.04' of the calculated single proportion position therefore it was not accepted. All found records found and used Pt. 203 as the 1/4 corner therefore we are in discrepancy with recorded records Bk. 11 Pg. 155, Bk. 19 Pg. 185, Bk. 19 Pg. 299 of surveys and Cabinet G Slide 36, Cabinet G Slide 60, Cabinet H Slide 80, Cabinet H Slide 82 and Cabinet H Slide 91.
235	675975.80291	772908.73382	SET A.C. "LS 37174"	Searched for, nothing found. Calculated at intersection of 1/4 corners.
236	670663.05107	772902.69871	(C)	Searched for, nothing found. Calculated at intersection of 1/4 corners.
237	665328.75773	767583.06006	(C)	Searched for, nothing found. Calculated at intersection of 1/4 corners.
238	665373.28314	775591.27172	SET A.C. "LS 37174"	Searched for, nothing found. Calculated position at mid point between G.L.O. offline witness corners (points 115 & 116).
239	665349.52908	772906.74678	1/2" REBAR "LS 35833"	Searched for, nothing found. Calculated at intersection of 1/4 corners.
2106	660062.86146	775583.58228	3/4" IRON BAR	Accepted iron bar based on substantial agreement with records recorded at Bk. 3 Pg. 234, Bk. 4 Pg. 277, Bk. 4 Pg. 278, Bk. 7 Pg. 129, Bk. 7 Pg. 256, Bk. 8 Pg. 149, Bk. 9 Pg. 147, Bk. 11 Pg. 293 and ADOT R/W Project Nos. I-10-4(45)199 and IR-10-4-801. No evidence to the contrary was found.
2107	657388.54541	772912.44002	3/4" REBAR	Accepted rebar based on substantial agreement with records recorded at Bk. 4 Pg. 277, Bk. 4 Pg. 278, Bk. 9 Pg. 147, Bk. 13 Pg. 32, Bk. 18 Pg. 279, Bk. 19 Pg. 169, Bk. 22 Pg. 147, Bk. 22 Pg. 273, Bk. 22 Pg. 276, ADOT R/W Project No. IR-10-4-801 and Bk. 15 Pg. 44 of maps where a B.L.M. B.C. was found. No evidence to the contrary was found.
2141	699877.81915	767716.55439	3/4" REBAR	Found rebar at intersection of 4 G.L.O. Offline Witness Corners. Accepted as original G.L.O. position.
2181	662662.69485	772920.83988	G.L.O. B.C. W.C.	Accepted as original G.L.O. offline witness corner as set by the G.L.O. in the 1928 resurvey and described in G.L.O. notes Volume R3844.
2182	662662.58933	772861.08078	G.L.O. B.C. W.C.	Accepted as original G.L.O. offline witness corner as set by the G.L.O. in the 1928 resurvey and described in G.L.O. notes Volume R3844.
2183	662692.31458	772890.90329	1/2" REBAR	Accepted 1/2" rebar based on agreement with two G.L.O. B.C. witness corners (Points 181 & 182) as called out in G.L.O. notes Volume R3844.
2184	660043.17708	772905.83816	1/2" REBAR	Found monument 4.17' east and 1.7' north of the intersection of opposing 1/4 corners. Monument was set by P.E. 6749 in record recorded at Bk. 15 Pg. 44 and tagged by L.S. 38001 in record recorded at Bk. 22 Pg. 276. This rebar is also accepted by records recorded at Bk. 9 Pg. 147, Bk. 13 Pg. 32, Bk. 18 Pg. 67, Bk. 21 Pg. 233 and Bk. 22 Pg. 147. Accepted position is in disagreement with records recorded at Bk. 3 Pg. 48 in which Pt. 2185 was accepted. Accepted monument as the center 1/4 Corner based on substantial agreement with the above mentioned records. Did not accept Pt. 2185 based on lack of supporting records and minimal use by others.
2186	660020.05396	770215.40954	5/8" REBAR	Accepted pipe as called out on county tie card by J.W. Rountree on 8-3-66, which a rebar was set along side G.L.O. pipe. Accepted Position substantially agrees with records recorded at Bk. 15 Pg. 44 of maps, Bk. 3 Pg. 48, Bk. 4 Pg. 277, Bk. 4 Pg. 278, Bk. 9 Pg. 147, Bk. 13 Pg. 32, Bk. 19 Pg. 169, Bk. 22 Pg. 243, Bk. 22 Pg. 276 and ADOT R/W Project Nos. I-10-4(45)199 and IR-10-4-801. Searched for county ties, none found. No evidence to the contrary was found.
2241	699848.45245	767746.00461	G.L.O. B.C. W.C.	Accepted as original G.L.O. offline witness corner as set by the G.L.O. in the 1928 resurvey and described in G.L.O. notes Volume 3845.
2341	699847.97925	767686.59606	G.L.O. B.C. W.C.	Accepted as original G.L.O. offline witness corner as set by the G.L.O. in the 1928 resurvey and described in G.L.O. notes Volume 3845.
2441	699907.68406	767686.63728	G.L.O. B.C. W.C.	Accepted as original G.L.O. offline witness corner as set by the G.L.O. in the 1928 resurvey and described in G.L.O. notes Volume 3845.
2541	699907.68441	767746.36576	G.L.O. B.C. W.C.	Accepted as original G.L.O. offline witness corner as set by the G.L.O. in the 1928 resurvey and described in G.L.O. notes Volume 3845.
2900	699868.68382	770371.64967	2 1/2" A.C.	Found A.C. to be within 0.1' of 2 G.L.O. offline witness corners. Accepted as original G.L.O. position.
2901	699838.77971	770341.84311	G.L.O. B.C. W.C.	Accepted as original G.L.O. offline witness corner as set by the G.L.O. in the 1928 resurvey and described in G.L.O. notes Volume 3845.
2902	699838.75343	770401.36068	G.L.O. B.C. W.C.	Accepted as original G.L.O. offline witness corner as set by the G.L.O. in the 1928 resurvey and described in G.L.O. notes Volume 3845.
3488	678634.32738	772924.63288	SET A.C. W.C.	Set witness corner for north 1/4 of Section 36, T.6S. R.6E.
3489	670662.82933	772867.69941	SET A.C. W.C.	Set witness corner for center 1/4 of Section 1, T.5S. R.6E.

Click here for I-10 Index

CHANGE ORDER REVISIONS			
C.O. NO.	DATE	BY	DESCRIPTION OF REVISIONS

DRAWING NO.	D-11-T-487
SURVEY	Oct.-Dec. 2009
DRAWN/DATE	MGB Oct. 2010
ADOT REVIEW	S. McLain
ROUTE NO.:	I-10
LOCATION:	Val Vista Rd. to Junction I-8

RBF CONSULTING — PLANNING • DESIGN • CONSTRUCTION
16605 NORTH 28TH AVENUE, SUITE 100
PHOENIX, ARIZONA 85053-2502
602.407.2200 • FAX 602.407.2201
www.RBF.com

ARIZONA DEPARTMENT OF TRANSPORTATION
INTERMODAL TRANSPORTATION DIVISION
RIGHT OF WAY PLANS SECTION

HIGHWAY NAME: PHOENIX - CASA GRANDE
FEDERAL AID NO.: UNASSIGNED
PROJECT NO.: 010 PN 188 H7585 01R

REGISTERED LAND SURVEYOR — CERTIFICATE NO. 42945 — CHAD E. WOOLGAR — 6/8/12 — ARIZONA, U.S.A. — Expires 6/30/14

010RW188_RS-20.DGN

SHEET RS-20

6/8/2012 12:07:36 PM H:\PDATA\15104363\CADD\WAPPIND\RDS\010RW188_RS-20.DGN

RESULTS OF SURVEY

I-10 EXISTING R/W LINE

THE FOLLOWING LIST OF POINTS REPRESENTS THE EXISTING RIGHT OF WAY LINE AS DETERMINED BY AN ANALYSIS OF MONUMENTATION FOUND DURING THE COURSE OF THIS SURVEY AND THE EXISTING DOCUMENTATION LISTED HEREIN.

LEFT SIDE			LEFT SIDE CONTINUED			RIGHT SIDE			RIGHT SIDE CONTINUED		
PT.	STATION	OFFSET	PT.	STATION	OFFSET	PT.	STATION	OFFSET	PT.	STATION	OFFSET
3148	2444+49.49	150.00 LT	(4)3209	-0+00.37	100.00 RT	3184	2444+49.49	150.00 RT	(4)3111	23+99.63	0.00 RT
3001	Radius Pt.	---	(4)3210	-0+00.37	0.00 LT	3001	Radius Pt.	---	(4)3112	21+99.63	0.00 LT
3149	2466+36.20	150.00 LT	(4)3211	-0+00.37	100.00 LT	3185	2465+03.80	150.00 RT	(4)3113	21+99.75	100.00 LT
3001	Radius Pt.	---	(4)3212	1+49.63	200.00 LT	3001	Radius Pt.	---	(4)3114	15+74.45	100.00 LT
3150	2479+73.18	150.00 LT	(4)3213	10+43.24	200.00 LT	3077	2491+82.33	150.00 RT	(4)3115	15+74.57	200.00 LT
3001	Radius Pt.	---	3213	2734+73.08	150.00 LT	3001	Radius Pt.	---	(4)3116	13+43.45	200.00 LT
3151	2493+80.83	150.00 LT	3010	Radius Pt.	---	3078	2493+27.62	150.00 RT	3116	2734+61.79	150.00 RT
3001	Radius Pt.	---	3214	2742+11.84	150.00 LT	3001	Radius Pt.	---	3010	Radius Pt.	---
3152	2513+56.47	150.00 LT	3215	2759+41.82	150.00 LT	3079	2513+56.47	150.00 RT	3117	2742+11.84	150.00 RT
650	2520+21.63	150.00 LT	3216	2774+78.21	150.00 LT	843	2520+20.89	150.00 RT	3118	2759+21.22	150.00 RT
3154	2546+77.01	150.00 LT	3217	2778+36.87	280.32 LT	3081	2546+77.38	150.00 RT	3119	2777+99.61	150.00 RT
3155	2572+57.90	150.00 LT	548	2782+48.79	674.30 LT	856	2572+59.39	150.00 RT	3120	2780+74.61	200.00 RT
(1)3155	31+50.37	75.00 LT	546	2785+76.64	764.38 LT	(1)856	28+50.37	75.00 LT	3121	2783+04.70	304.05 RT
(1)3156	40+00.09	75.00 LT	3487	2786+51.38	747.74 LT	(1)3082	26+45.07	75.00 LT	3122	2783+84.74	360.78 RT
(1)3157	39+99.72	0.00 LT	544	2793+13.58	600.25 LT	(1)3083	19+99.70	75.00 LT	3123	2783+70.28	381.17 RT
(1)3158	39+99.90	0.00 RT	542	2796+78.57	500.28 LT	(1)3084	19+99.70	0.00 RT	3124	2785+67.85	521.20 RT
(1)632	39+99.88	75.00 RT	3222	2799+36.43	500.00 LT	(1)3085	17+99.70	0.00 LT	3125	2788+78.45	741.35 RT
(1)630	31+49.88	75.00 RT	3488	2797+11.10	81.44 LT	(1)852	17+99.70	141.00 RT	3489	2795+63.58	91.64 RT
630	2574+08.41	150.00 LT	3224	2800+34.20	152.22 LT	(1)838	26+44.02	141.00 RT	3127	2797+94.19	129.38 RT
628	2599+86.83	150.00 LT	3225	2800+66.40	190.00 LT	(1)837	26+44.34	75.00 RT	3128	2797+76.62	150.00 RT
1122	2613+70.01	150.00 LT	530	2812+62.73	150.00 LT	(1)831	28+49.87	75.00 RT	3129	2812+51.91	150.00 RT
1120	2619+77.63	218.91 LT	973	2812+71.76	150.00 LT	831	2574+08.89	150.00 RT	3130	2826+49.18	150.00 RT
3159	2623+00.04	344.00 LT	3227	2826+49.18	150.00 LT	830	2599+87.35	150.00 RT	3013	Radius Pt.	---
620	2625+39.22	369.90 LT	3013	Radius Pt.	---	822	2617+50.56	150.00 RT	768	2835+30.55	150.00 RT
(2)620	23+70.18	100.00 LT	3228	2827+99.53	150.00 LT	3086	2623+30.56	289.00 RT	3131	2836+89.03	174.84 RT
(2)887	30+00.18	100.00 LT	522	2835+99.54	170.00 LT	3087	2625+41.15	320.00 RT	3132	Radius Pt.	---
(2)616	30+00.18	75.00 LT	521	2838+99.54	180.00 LT	(2)3087	16+80.27	100.00 LT	3133	2838+72.66	247.95 RT
(2)888	32+60.03	75.00 LT	519	2840+07.48	202.16 LT	(2)3088	16+45.37	100.00 LT	3132	Radius Pt.	---
(2)889	33+04.79	120.00 LT	(6)519	19+77.14	50.00 LT	(2)3089	9+00.75	100.00 LT	3134	2839+96.40	1045.82 RT
(2)890	33+91.33	120.00 LT	(6)517	23+00.00	60.00 LT	(2)3090	9+00.42	50.00 LT	(7)3162	3364+59.28	202.75 LT
(2)891	34+35.61	75.00 LT	(6)515	25+00.00	60.00 LT	(2)3243	205+11.91 BK.	50.00 LT	(7)3135	3360+87.06	152.24 LT
(2)3160	42+30.38	75.00 LT	(6)513	28+25.90	60.00 LT	(2)3243	9+00.00 AHD.	50.00 LT	(7)3136	3360+70.54	150.00 LT
(2)895	42+64.52	109.00 LT	(6)511	30+84.75	60.00 LT	(2)3091	186+10.81	50.00 LT	(7)3137	3332+43.26	150.00 LT
(2)3161	43+16.99	109.00 LT	(6)509	34+00.00	65.00 LT	(2)3092	186+10.81	50.00 RT	(7)3138	3315+77.67	150.00 LT
(2)3192	43+15.90	95.70 RT	(6)3246	34+38.48	60.84 LT	(2)827	205+11.41	50.00 RT	(7)746	3299+91.10	150.00 LT
(2)3193	42+70.73	95.00 RT	(6)507	37+00.00	65.00 LT	(2)3093	205+10.86	100.00 RT	(7)748	3291+13.72	150.00 LT
(2)3194	Radius Pt.	---	(6)505	40+00.00	70.00 LT	(2)3244	205+11.91 BK.	100.00 RT	(7)700	3291+13.84	150.00 RT
(2)3195	42+70.98	82.00 RT	(6)503	42+87.86	60.00 LT	(2)3244	9+00.00 AHD.	100.00 RT	(7)702	3299+99.25	550.12 RT
(2)1114	42+54.12	65.00 RT	(6)3229	46+50.18	60.00 LT	(2)3094	16+43.99	100.00 RT	(7)102	3305+45.26	602.46 RT
(2)3196	29+99.67	65.00 RT	(6)500	49+00.00	60.00 LT	(2)3095	16+79.27	100.00 RT	(7)705	3314+99.52	150.00 RT
(2)3197	29+99.42	100.00 RT	(6)3230	52+00.00	60.00 LT	3095	2627+42.55	320.00 RT	(7)3139	3334+60.49	150.00 RT
(2)3198	23+69.29	100.00 RT	(6)3231	54+68.12	62.34 LT	3096	2629+01.97	299.00 RT	(7)3140	3356+69.76	150.00 RT
3198	2627+37.61	370.00 LT	(6)2337	55+00.00	60.00 LT	3097	2635+41.97	150.00 RT	(8)3141	3366+31.20	96.00 RT
3199	2629+67.53	354.00 LT				3098	2652+86.76	150.00 RT	(8)3038	Radius Pt.	---
3200	2635+82.53	150.00 LT				3099	2678+34.71	150.00 RT	(8)3245	3366+48.14 BK.	96.00 RT
3201	2652+85.21	150.00 LT				(3)3099	14+49.61	100.00 RT	(8)3245	3366+46.61 AHD.	96.00 RT
602	2678+33.53	150.00 LT				(3)3100	16+54.56	100.00 RT	(8)3038	Radius Pt.	---
(3)602	11+49.61	100.00 RT				(3)3101	23+98.54	100.00 RT	(8)3142	3367+15.36	96.00 RT
(3)3202	3+49.56	100.00 RT				(3)3102	24+00.04	0.00 LT	(8)3038	Radius Pt.	---
(3)3203	3+49.94	0.00 LT				(3)3103	24+01.66	100.00 LT	(8)739	3374+29.68	96.00 RT
(3)3204	3+50.44	100.00 LT				(3)3104	16+56.56	100.00 LT	(8)3143	3378+34.21	96.00 RT
(3)3205	11+50.50	100.00 LT				(3)3105	14+50.49	100.00 LT	(8)3041	Radius Pt.	---
3205	2680+33.38	150.00 LT				3105	2680+34.86	150.00 RT	(8)3144	3396+00.01	96.13 RT
3206	2706+00.22	150.00 LT				3106	2706+02.85	150.00 RT	(8)3145	3396+85.08	53.86 RT
3207	2723+21.44	150.00 LT				3107	2723+21.44	150.00 RT	3145	2864+63.92	150.00 RT
3010	Radius Pt.	---				3010	Radius Pt.	---	3013	Radius Pt.	---
570	2731+20.61	150.00 LT				589	2731+13.91	150.00 RT	3146	2868+14.80	150.00 RT
(4)570	10+53.80	150.00 RT				(4)589	13+53.88	150.00 RT	3013	Radius Pt.	---
(4)3208	1+99.63	150.00 RT				(4)3108	15+72.50	150.00 RT	3147	2869+70.91	150.00 RT
						(4)3109	22+49.63	150.00 RT	3013	Radius Pt.	---
						(4)3110	23+99.63	100.00 RT	2310	2876+04.96	150.00 RT

OLD S.R. 84 COUNTY ROAD EXISTING R/W LINE

THE FOLLOWING LIST OF POINTS REPRESENTS THE EXISTING RIGHT OF WAY LINE AS DETERMINED BY AN ANALYSIS OF MONUMENTATION FOUND DURING THE COURSE OF THIS SURVEY AND THE EXISTING DOCUMENTATION LISTED HEREIN.

LEFT SIDE			RIGHT SIDE		
PT.	STATION	OFFSET	PT.	STATION	OFFSET
3163	3360+09.22	83.85 LT	3167	3358+74.46	18.36 RT
3164	3364+30.88	90.72 LT	3168	3365+04.68	8.09 RT
3165	3364+67.78	41.32 LT	3169	3365+41.58	57.49 RT
3125	3364+90.26	41.69 LT	3170	3363+32.08	60.91 RT
3222	3381+22.04	50.00 LT	3171	Radius Pt.	---
3166	3397+73.50	50.00 LT	3172	3365+48.60	66.89 RT
			3171	Radius Pt.	---
			3173	3366+09.87	66.38 RT
			3126	3374+35.94	60.00 RT
			3223	3376+70.49	60.00 RT
			3174	3398+52.85	60.00 RT

Click here for I-10 Index

ALL STATION AND OFFSETS BASED ON I-10 MEDIAN ℄ UNLESS OTHERWISE NOTED.

(1) STATION AND OFFSET BASED ON STOREY ROAD ℄.
(2) STATION AND OFFSET BASED ON SR 287 ℄.
(3) STATION AND OFFSET BASED ON EARLEY ROAD ℄.
(4) STATION AND OFFSET BASED ON SELMA HIGHWAY ℄.
(6) STATION AND OFFSET BASED ON RAMP C ℄.
(7) STATION AND OFFSET BASED ON I-8 MEDIAN ℄.
(8) STATION AND OFFSET BASED ON I-8 EAST BOUND ℄.

CHANGE ORDER REVISIONS

C.O. NO.	DATE	BY	DESCRIPTION OF REVISIONS
PM-15-082	12/15/15	JPK	Replaced 3223 w/ 3488 Left Side, rev. Sta. & Offset
" "	" "	" "	Replaced 3126 w/ 3489 Right Side, rev. Sta. & Offset

DRAWING NO.	D-11-T-487
SURVEY	Oct.-Dec. 2009
DRAWN/DATE	MGB Oct. 2010
ADOT REVIEW	S. McLain
ROUTE NO.:	I-10
LOCATION:	Val Vista Rd. to Junction I-8

RBF CONSULTING — PLANNING • DESIGN • CONSTRUCTION
16605 NORTH 28TH AVENUE, SUITE 100
PHOENIX, ARIZONA 85032-2002
602.467.2200 • FAX. 602.467.2201
www.RBF.com

ARIZONA DEPARTMENT OF TRANSPORTATION
INTERMODAL TRANSPORTATION DIVISION
RIGHT OF WAY PLANS SECTION

HIGHWAY NAME: PHOENIX - CASA GRANDE
FEDERAL AID NO.: UNASSIGNED
PROJECT NO.: 010 PN 188 H7585 01R

REGISTERED LAND SURVEYOR CERTIFICATE NO. 42945 CHAD E. WOOLGAR 6/8/12 ARIZONA, U.S.A. Expires 6/30/14

SHEET RS-21

010RW188_RS-21.DGN

H:\PDATA\451043G3\CADD\MAPPING\ROS\010RW188_RS-21.DGN 10:36:13 AM 6/8/2012

RESULTS OF SURVEY

EXISTING R/W MONUMENTATION

	PT.	NORTHING	EASTING	DESCRIPTION	STATION	OFFSET
	(7)102	665331.68047	764956.47774	G.L.O. B.C.	3305+45.26	602.46 RT
	(6)500	660525.15460	773483.42425	3" ADOT A.C. IN CONC. NO STAMPING FLUSH	49+00.00	60.00 LT
*	(6)501	660527.05239	773483.04741	ANGLE IRON WITNESS POST	48+98.02	60.29 LT
	(6)503	661111.76111	773343.46622	3" ADOT A.C. IN CONC. NO STAMPING FLUSH	42+87.86	60.00 LT
*	(6)504	661113.66567	773342.88003	ANGLE IRON WITNESS POST	42+85.96	59.82 LT
	(6)505	661401.56270	773258.23839	3" ADOT A.C. IN CONC. NO STAMPING FLUSH	40+00.00	70.00 LT
*	(6)506	661403.17975	773257.15202	ANGLE IRON WITNESS POST	39+98.17	69.69 LT
	(6)507	661667.69867	773089.32719	3" ADOT A.C. IN CONC. NO STAMPING FLUSH	37+00.00	65.00 LT
*	(6)508	661669.12179	773087.35723	ANGLE IRON WITNESS POST	36+97.77	64.34 LT
	(6)509	661890.14523	772866.88142	3" ADOT A.C. IN CONC. NO STAMPING FLUSH	34+00.00	65.00 LT
*	(6)510	661890.85790	772865.00370	ANGLE IRON WITNESS POST	33+98.17	64.40 LT
	(6)511	662056.57440	772582.01795	3" ADOT A.C. IN CONC. NO STAMPING FLUSH	30+84.75	60.00 LT
*	(6)512	662057.28747	772579.95671	ANGLE IRON WITNESS POST	30+82.57	59.81 LT
	(6)513	662162.11915	772345.66229	3" ADOT A.C. IN CONC. NO STAMPING FLUSH	28+25.90	60.00 LT
*	(6)514	662162.95079	772343.70555	ANGLE IRON WITNESS POST	28+23.68	59.96 LT
	(6)515	662320.63346	772077.42177	3" ADOT A.C. IN CONC. NO STAMPING FLUSH	25+00.00	60.00 LT
*	(6)516	662321.62338	772075.83002	ANGLE IRON WITNESS POST	24+98.05	59.83 LT
	(6)517	662446.49551	771933.13640	3" ADOT A.C. IN CONC. NO STAMPING FLUSH	23+00.00	60.00 LT
*	(6)518	662448.01964	771931.75593	ANGLE IRON WITNESS POST	22+97.85	60.10 LT
	519	662682.96112	771732.73791	3" ADOT A.C. IN CONC. NO STAMPING FLUSH	2840+07.48	202.16 LT
	(6)519	662682.96112	771732.73791	3" ADOT A.C. IN CONC. NO STAMPING FLUSH	19+77.14	50.00 LT
*	520	662684.48598	771731.35343	ANGLE IRON WITNESS POST	2840+05.54	201.31 LT
*	(6)520	662684.48598	771731.35343	ANGLE IRON WITNESS POST	19+75.04	49.64 LT
	521	662775.95636	771680.50111	3" ADOT A.C. IN CONC. NO STAMPING FLUSH	2838+99.54	180.00 LT
	522	663053.82653	771594.14412	3" ADOT A.C. IN CONC. NO STAMPING FLUSH	2835+99.54	170.00 LT
*	523	663055.84731	771593.71944	ANGLE IRON WITNESS POST	2835+97.41	170.07 LT
	524	663815.91753	771441.99574	3" ADOT A.C. IN CONC. NO STAMPING FLUSH	2827+99.73	149.69 LT
*	525	663818.32020	771441.87118	ANGLE IRON WITNESS POST	2827+97.26	149.81 LT
	526	663962.22912	771429.41029	3" AZ. HWY. DEPT. B.C. STAMPED "P.C. 2826+48.77 1965" UP 0.4'	2826+48.94	150.01 LT
*	527	663965.94265	771429.81174	ANGLE IRON WITNESS POST	2826+45.26	150.69 LT
	528	664609.36202	771380.73590	3" AZ. HWY. DEPT. B.C. STAMPED "2820+00 1965" UP 0.5'	2819+99.98	149.91 LT
*	529	664613.05352	771380.58876	ANGLE IRON WITNESS POST	2819+96.28	150.04 LT
	530	665344.54853	771325.65593	3" AZ. HWY. DEPT. B.C. STAMPED "2812+62.48" UP 0.5'	2812+62.73	150.00 LT
*	531	665348.08296	771325.49116	ANGLE IRON WITNESS POST	2812+59.19	150.10 LT
	532	666540.26524	771275.80936	3" AZ. HWY. DEPT. B.C. STAMPED "2800+66.44 1965" FLUSH	2800+66.63	189.78 LT
	(5)532	666540.26524	771275.80936	3" AZ. HWY. DEPT. B.C. STAMPED "2800+66.44 1965" FLUSH	3379+70.40	250.33 RT
*	533	666538.20431	771275.64725	ANGLE IRON WITNESS POST	2800+68.68	189.46 LT
*	(5)533	666538.20431	771275.64725	ANGLE IRON WITNESS POST	3379+71.48	252.09 RT
	538	666693.50813	771575.60531	3" AZ. HWY. DEPT. B.C. STAMPED "HWY 84 3381+23.68 1965" FLUSH	2799+36.26	500.20 LT
	(5)538	666693.50813	771575.60531	3" AZ. HWY. DEPT. B.C. STAMPED "HWY 84 3381+23.68 1965" FLUSH	3381+22.09	50.26 LT
	539	666693.59000	771574.78451	1/2" REBAR W/ PLASTIC CAP STAMPED "L.S. 37495" DN. 0.2'	2799+36.11	499.39 LT
	(5)539	666693.59000	771574.78451	1/2" REBAR W/ PLASTIC CAP STAMPED "L.S. 37495" DN. 0.2'	3381+21.37	49.84 LT
	540	666693.85419	771574.78455	1/2" REBAR W/ NO ID. DN. 0.3'	2799+35.85	499.41 LT
	(5)540	666693.85419	771574.78455	1/2" REBAR W/ NO ID. DN. 0.3'	3381+21.22	50.06 LT
*	541	666696.52755	771575.14274	ANGLE IRON WITNESS POST	2799+33.21	499.97 LT
*	(5)541	666696.52755	771575.14274	ANGLE IRON WITNESS POST	3381+19.93	52.43 LT
	542	666950.48161	771556.39528	3" ADOT A.C. IN CONC. STAMPED "LS 22258" FLUSH	2796+78.57	500.28 LT
*	543	666951.77270	771555.90377	ANGLE IRON WITNESS POST	2796+77.24	499.88 LT
	544	667321.92453	771628.77913	3" ADOT A.C. IN CONC. STAMPED "LS 22258" FLUSH	2793+13.58	600.25 LT
*	545	667321.17064	771628.76579	ANGLE IRON WITNESS POST	2793+14.33	600.19 LT
	546	668069.08518	771737.29621	3" ADOT A.C. IN CONC. STAMPED "LS 22258" FLUSH	2785+76.64	764.38 LT
*	547	668068.34203	771737.18999	ANGLE IRON WITNESS POST	2785+77.37	764.22 LT
	548	668389.27272	771622.92864	3" ADOT A.C. IN CONC. STAMPED "LS 22258" FLUSH	2782+48.79	674.30 LT
*	549	668388.36224	771623.40866	ANGLE IRON WITNESS POST	2782+49.73	674.71 LT
	550	668770.73390	771199.57382	3" ADOT A.C. IN CONC. STAMPED "LS 22258" FLUSH	2778+36.72	280.68 LT
*	551	668769.92038	771200.97008	ANGLE IRON WITNESS POST	2778+37.63	282.01 LT
	552	669118.30998	771042.81732	3" ADOT A.C. IN CONC. STAMPED "LS 22258" FLUSH	2774+78.38	150.37 LT
*	553	669119.37049	771043.27551	ANGLE IRON WITNESS POST	2774+77.36	150.91 LT
	554	670093.84589	770969.34375	3" AZ. HWY. DEPT. B.C. STAMPED "2765+00 1965" FLUSH	2765+00.08	150.11 LT
*	555	670097.27259	770969.26902	ANGLE IRON WITNESS POST	2764+96.66	150.29 LT
	556	670592.44281	770932.02781	3" AZ. HWY. DEPT. B.C. STAMPED "2760+00.00 ELEV. 1446.91" FLUSH	2760+00.09	150.21 LT
*	557	670595.41225	770931.37583	ANGLE IRON WITNESS POST	2759+97.08	149.79 LT
	558	672375.08454	770798.17588	3" AZ. HWY. DEPT. B.C. STAMPED "2742+07.84 BK 2742+12.30 AH ELEV. 1442.24" FLUSH	2742+12.43	150.15 LT
*	559	672379.17079	770797.79853	ANGLE IRON WITNESS POST	2742+08.31	150.08 LT

EXISTING R/W MONUMENTATION CONTINUED

	PT.	NORTHING	EASTING	DESCRIPTION	STATION	OFFSET
	560	673107.80122	770755.10959	3" ADOT A.C. IN CONC. NO STAMPING FLUSH	2734+73.58	150.22 LT
	(4)560	673107.80122	770755.10959	3" ADOT A.C. IN CONC. NO STAMPING FLUSH	10+42.99	200.49 LT
*	562	673104.36038	770755.02504	ANGLE IRON WITNESS POST	2734+77.04	149.99 LT
*	(4)562	673104.36038	770755.02504	ANGLE IRON WITNESS POST	10+43.09	203.93 LT
	563	667993.94935	771726.32087	1/2" REBAR W/ TAG STAMPED "L.S. 38001" UP 0.1'	2786+50.74	747.82 LT
	570	673458.23653	770742.61730	3" AZ. HWY. DEPT. B.C. STAMPED "2731+19.86 ELEV. 1439.59" FLUSH	2731+20.61	150.00 LT
	(4)570	673458.23653	770742.61730	3" AZ. HWY. DEPT. B.C. STAMPED "2731+19.86 ELEV. 1439.59" FLUSH	10+53.80	150.00 RT
*	571	673461.04817	770742.35046	ANGLE IRON WITNESS POST	2731+17.77	149.81 LT
*	(4)571	673461.04817	770742.35046	ANGLE IRON WITNESS POST	10+54.06	152.81 RT
	572	674252.25230	770735.09517	3" AZ. HWY. DEPT. B.C. STAMPED "2723+21.41 ELEV. 1438.28" FLUSH	2723+21.28	150.30 LT
*	573	674255.57346	770734.55950	ANGLE IRON WITNESS POST	2723+17.97	149.74 LT
	574	675987.46116	770747.89803	3" AZ. HWY. DEPT. B.C. STAMPED "2705+85.89 ELEV." FLUSH	2705+86.03	149.96 LT
*	575	675990.02997	770747.69466	ANGLE IRON WITNESS POST	2705+83.46	149.74 LT
*	(3)576	678538.24295	771563.85255	ANGLE IRON WITNESS POST	3+53.92	99.68 LT
	577	678539.48227	770767.65750	3" AZ. HWY. DEPT. B.C. STAMPED "ELEV.1432.03 2680+33.71" FLUSH	2680+33.93	150.38 LT
	(3)577	678539.48227	770767.65750	3" AZ. HWY. DEPT. B.C. STAMPED "ELEV.1432.03 2680+33.71" FLUSH	11+50.12	100.55 LT
*	578	678535.93967	770766.46716	ANGLE IRON WITNESS POST	2680+37.48	149.22 LT
*	(3)578	678535.93967	770766.46716	ANGLE IRON WITNESS POST	11+51.30	104.10 LT
	589	673456.79632	770442.54583	3" AZ. HWY. DEPT. B.C. STAMPED "2731+14.81 ELEV. 1438.97" FLUSH	2731+13.91	150.00 RT
	(4)589	673456.79632	770442.54583	3" AZ. HWY. DEPT. B.C. STAMPED "2731+14.81 ELEV. 1438.97" FLUSH	13+53.88	150.00 RT
*	590	673453.40567	770443.32189	ANGLE IRON WITNESS POST	2731+17.29	149.32 RT
*	(4)590	673453.40567	770443.32189	ANGLE IRON WITNESS POST	13+53.12	146.61 RT
	591	674254.60301	770434.90945	3" AZ. HWY. DEPT. B.C. STAMPED "ELEV.1437.75 2723+21.41" FLUSH	2723+21.21	149.89 RT
*	592	674250.19595	770435.34661	ANGLE IRON WITNESS POST	2723+25.58	149.42 RT
	593	675989.73302	770447.92780	3" AZ. HWY. DEPT. B.C. STAMPED "2705+85.89" FLUSH	2705+86.03	150.02 RT
*	594	675986.61553	770448.22424	ANGLE IRON WITNESS POST	2705+89.14	149.70 RT
	595	677075.54496	770455.97562	3" AZ. HWY. DEPT. B.C. NO STAMPING FLUSH	2695+00.19	150.20 RT
*	596	677073.05142	770456.42782	ANGLE IRON WITNESS POST	2695+02.68	149.73 RT
	597	678541.30824	770467.21517	3" AZ. HWY. DEPT. B.C. STAMPED "2680+34.23 ELEV. 1431.27" FLUSH	2680+34.38	150.07 RT
	(3)597	678541.30824	770467.21517	3" AZ. HWY. DEPT. B.C. STAMPED "2680+34.23 ELEV. 1431.27" FLUSH	14+50.56	99.52 LT
*	598	678538.25054	770467.55622	ANGLE IRON WITNESS POST	2680+37.44	149.70 RT
*	(3)598	678538.25054	770467.55622	ANGLE IRON WITNESS POST	14+50.21	102.58 LT
	602	678740.03175	770768.69468	3" AZ. HWY. DEPT. B.C. STAMPED "2678+ ELEV. 143" FLUSH	2678+33.52	150.00 LT
	(3)602	678740.03175	770768.69468	3" AZ. HWY. DEPT. B.C. STAMPED "2678+ ELEV. 143" FLUSH	11+49.61	100.00 RT
*	603	678742.56148	770767.95978	ANGLE IRON WITNESS POST	2678+31.00	149.25 LT
*	(3)603	678742.56148	770767.95978	ANGLE IRON WITNESS POST	11+50.35	102.53 RT
	(2)604	683834.82968	771652.84763	3" AZ. HWY. DEPT. B.C. STAMPED "30+00.00 ELEV. 1424.40" FLUSH	29+99.96	99.93 RT
*	(2)605	683835.52888	771648.43813	ANGLE IRON WITNESS POST	29+95.56	99.23 RT
	606	683834.37559	771023.35009	3" AZ. HWY. DEPT. B.C. STAMPED "23+70.00 ELEV. 1424.23" FLUSH	2627+37.62	371.17 LT
	(2)606	683834.37559	771023.35009	3" AZ. HWY. DEPT. B.C. STAMPED "23+70.00 ELEV. 1424.23" FLUSH	23+70.47	100.02 RT
*	607	683832.25247	771022.71301	ANGLE IRON WITNESS POST	2627+39.74	370.55 LT
*	(2)607	683832.25247	771022.71301	ANGLE IRON WITNESS POST	23+69.83	102.14 RT
	608	683602.22345	771004.58951	3" AZ. HWY. DEPT. B.C. STAMPED "2629+70.00 ELEV. 1423.83" FLUSH	2629+69.89	353.94 LT
*	609	683605.81342	771004.05132	ANGLE IRON WITNESS POST	2629+66.30	353.38 LT
	610	682988.58701	770797.87907	3" AZ. HWY. DEPT. B.C. STAMPED "2635+85.00 ELEV. 1424.45" FLUSH	2635+84.87	151.26 LT
*	611	682992.15932	770797.21490	ANGLE IRON WITNESS POST	2635+81.30	150.58 LT
	612	681287.32319	770785.56668	REMNANTS OF CONC. MON BASE NO CAP DN. 0.4'	2652+86.18	150.13 LT
*	613	681290.76161	770784.71945	ANGLE IRON WITNESS POST	2652+82.74	149.26 LT
	614	680073.37536	770777.56979	CONC. MON BASE NO CAP DN. 0.5'	2665+00.15	150.11 LT
*	615	680075.38703	770777.46141	ANGLE IRON WITNESS POST	2664+98.14	149.99 LT
	(2)616	684009.76427	771652.96560	3.5" ADOT A.C. ON 5/8" REBAR STAMPED "LS 25396 287 PN 117 H7059 01R 2007 302 30+00.16" FLUSH	30+00.18	75.00 LT
	(2)618	683864.69410	771653.15007	3" ADOT B.C. STAMPED "30+00.35" FLUSH	30+00.28	70.07 RT
	620	684034.39609	771022.95109	3.5" ADOT A.C. ON 5/8" REBAR STAMPED "LS 25396 287 PN 117 H7059 01R 2007 205 2625+39.20" FLUSH	2625+39.22	369.90 LT
	(2)620	684034.39609	771022.95109	3.5" ADOT A.C. ON 5/8" REBAR STAMPED "LS 25396 287 PN 117 H7059 01R 2007 205 2625+39.20" FLUSH	23+70.18	100.00 LT
	622	684274.00787	770997.90871	3" AZ. HWY. DEPT. B.C. STAMPED "2623+00.00 ELEV. 1423.33" FLUSH	2622+99.66	344.33 LT
*	623	684270.80236	770998.26588	ANGLE IRON WITNESS POST	2623+02.87	344.70 LT
	624	684774.33694	770805.07728	3" AZ. HWY. DEPT. B.C. STAMPED "2618+00.00 ELEV. 1421.13" FLUSH	2617+99.76	150.39 LT
*	625	684772.03180	770805.25955	ANGLE IRON WITNESS POST	2618+02.07	150.58 LT
	626	686205.35565	770807.99521	3" AZ. HWY. DEPT. B.C. STAMPED "2603+69.00 ELEV. 1418.75" FLUSH	2603+68.74	150.15 LT
*	627	686208.39257	770807.69294	ANGLE IRON WITNESS POST	2603+65.70	149.84 LT
	628	686587.27048	770808.68903	3.5" ADOT A.C. ON 5/8" REBAR STAMPED "LS 25396 287 PN 117 H7059 01R 2007 306 W.C. 505" FLUSH	2599+86.82	150.00 LT
*	629	686587.26548	770809.10469	ANGLE IRON WITNESS POST	2599+86.83	150.42 LT

TABLE CONTINUES ON SHEET RS-23

ALL STATION AND OFFSETS BASED ON I-10 MEDIAN ℄ UNLESS OTHERWISE NOTED.
(2) STATION AND OFFSET BASED ON SR 287 ℄.
(3) STATION AND OFFSET BASED ON EARLEY ROAD ℄.
(4) STATION AND OFFSET BASED ON SELMA HIGHWAY ℄.
(5) STATION AND OFFSET BASED ON SR 84 ℄.
(6) STATION AND OFFSET BASED ON RAMP C ℄.
(7) STATION AND OFFSET BASED ON I-8 MEDIAN ℄.
* ADOT ANGLE IRON WITNESS POST NOT USED IN R/W ANALYSIS AND ARE NOT SHOWN ON R/W CORRIDOR SHEETS.

Click here for I-10 Index

CHANGE ORDER REVISIONS			
C.O. NO.	DATE	BY	DESCRIPTION OF REVISIONS

DRAWING NO.	D-11-T-487
SURVEY	Oct.-Dec. 2009
DRAWN/DATE	MGB Oct. 2010
ADOT REVIEW	S. McLain
ROUTE NO.:	I-10

RBF CONSULTING — PLANNING • DESIGN • CONSTRUCTION, 16605 NORTH 28TH AVENUE, SUITE 100, PHOENIX, ARIZONA 85032-2002, 602.407.2000 • FAX 602.407.2001, www.RBF.com

ARIZONA DEPARTMENT OF TRANSPORTATION
INTERMODAL TRANSPORTATION DIVISION
RIGHT OF WAY PLANS SECTION

HIGHWAY NAME: PHOENIX - CASA GRANDE
FEDERAL AID NO.: UNASSIGNED
PROJECT NO.: 010 PN 188 H7585 01R
LOCATION: Val Vista Rd. to Junction I-8

REGISTERED LAND SURVEYOR — CERTIFICATE NO. 42945 — CHAD E. WOOLGAR — 6/8/12 — Date Signed — ARIZONA, U.S.A. — Expires 6/30/14

SHEET RS-22

010RW188_RS-22.DGN

6/8/2012 12:08:41 PM H:\PDATA\45194363\CADD\WAPPIND\RDS\010RW188_RS-22.DGN

RESULTS OF SURVEY

EXISTING R/W MONUMENTATION CONTINUED

	PT.	NORTHING	EASTING	DESCRIPTION	STATION	OFFSET
	630	689165.68844	770814.38748	3" AZ. HWY. DEPT. B.C. STAMPED "P.O.T. 2574+08.53 ELEV. 1415.88" FLUSH	2574+08.41	150.00 LT
	(1) 630	689165.68844	770814.38748	3" AZ. HWY. DEPT. B.C. STAMPED "P.O.T. 2574+08.53 ELEV. 1415.88" FLUSH	31+49.88	75.00 RT
*	631	689162.56257	770813.30398	ANGLE IRON WITNESS POST	2574+11.53	148.92 LT
*	(1) 631	689162.56257	770813.30398	ANGLE IRON WITNESS POST	31+48.80	78.13 RT
	(1) 632	689165.19679	771664.38716	3" AZ. HWY. DEPT. B.C. STAMPED "40+00.00" FLUSH	39+99.88	75.00 RT
*	(1) 633	689168.64859	771663.09021	ANGLE IRON WITNESS POST	39+98.58	71.55 RT
	(1) 634	689206.92589	771664.52265	3" AZ. HWY. DEPT. B.C. STAMPED "40+00.00" FLUSH	39+99.99	33.27 RT
*	(1) 635	689203.94524	771663.80787	ANGLE IRON WITNESS POST	39+99.28	36.25 RT
	(1) 636	689272.81219	771664.72722	3" AZ. HWY. DEPT. B.C. STAMPED "40+00.00" FLUSH	40+00.16	32.62 LT
*	(1) 637	689270.83197	771664.17577	ANGLE IRON WITNESS POST	39+99.61	30.64 LT
	(1) 638	689314.83673	771665.39410	DISTURBED 3" AZ. HWY. DEPT. B.C. STAMPED "40+00.00" UP FLUSH LEANING E. NOTE: MONUMENT IS NOT IN ORIGINAL POSITION	40+00.80	74.64 LT
*	(1) 639	689312.24009	771663.62784	ANGLE IRON WITNESS POST	39+99.03	72.04 LT
	643	691896.11658	770829.20321	3" AZ. HWY. DEPT. B.C. STAMPED "P.O.T. 2546+77.36 ELEV. 1413.87" FLUSH	2546+77.43	149.96 LT
*	644	691899.25758	770828.91684	ANGLE IRON WITNESS POST	2546+74.29	149.65 LT
	645	689315.90970	770815.07432	3" AZ. HWY. DEPT. B.C. STAMPED "P.O.T. 2572+58.02 ELEV. 1415.46" FLUSH	2572+57.68	150.10 LT
	(1) 645	689315.90970	770815.07432	3" AZ. HWY. DEPT. B.C. STAMPED "P.O.T. 2572+58.02 ELEV. 1415.46" FLUSH	31+50.48	75.22 LT
*	646	689319.49860	770813.58679	ANGLE IRON WITNESS POST	2572+54.10	148.60 LT
*	(1) 646	689319.49860	770813.58679	ANGLE IRON WITNESS POST	31+48.99	78.81 LT
	647	695216.19950	770847.59587	3" AZ/HWY. DEPT. B.C. STAMPED "2513+89.75 BK 2516+57.20 AHD ELEV 1409.68" FLUSH	2513+57.30	149.98 LT
*	648	695219.47385	770847.25309	ANGLE IRON WITNESS POST	2513+54.06	149.62 LT
	650	694551.88433	770843.94091	3" AZ. HWY. DEPT. B.C. STAMPED "P.O.T. 2520+21.70 ELEV. 1409.42" FLUSH	2520+21.63	150.00 LT
	653	698595.00162	770364.70948	3" AZ. HWY. DEPT. B.C. STAMPED "P.O.C. 2479+76.18 ELEV. 1407.05" FLUSH	2479+75.98	149.90 LT
	655	693219.02492	770836.51987	1" IRON PIPE W/ TAG STAMPED "L.S. 3042" UP 0.2'	2533+54.51	149.95 LT
	661	699870.05924	769902.18110	1/2" REBAR W/ TAG STAMPED "L.S. 5713" UP 0.3'	2466+36.37	149.81 LT
	662	699863.44127	769904.96721	3" AZ. HWY. DEPT. B.C. STAMPED "P.O.C. 2466+43.31 ELEV. 1412.08" FLUSH	2466+43.46	149.76 LT
*	663	699865.78763	769903.37831	ANGLE IRON WITNESS POST	2466+40.71	149.22 LT
	665	701809.00190	768838.14102	3" AZ. HWY. DEPT. B.C. STAMPED "P.C. 2444+49.871 ELEV. 1419.77" FLUSH	2444+49.86	149.54 LT
	666	701640.27565	768590.06463	3" AZ. HWY. DEPT. B.C. STAMPED "P.C. 2444+49.871 ELEV. 1418.60" FLUSH	2444+49.89	150.48 RT
* **	667	701811.59282	768836.24534	ANGLE IRON WITNESS POST	Radius Pt.	---
	(5) 674	668993.29817	768496.19878	3" AZ. HWY. DEPT. B.C. STAMPED "ELEV. 1449.08 STA 3342+80.33" FLUSH	3342+78.72	69.34 LT
*	(5) 675	668992.14737	768497.88821	ANGLE IRON WITNESS POST	3342+80.76	69.41 LT
	(5) 676	668327.06525	769408.21868	3" AZ. HWY. DEPT. B.C. STAMPED "3354+10.25 1960" FLUSH	3354+08.17	69.35 LT
*	(5) 677	668325.88982	769409.99602	ANGLE IRON WITNESS POST	3354+10.29	69.45 LT
	(5) 678	668166.67476	769628.20270	1/2" REBAR W/ PLASTIC CAP STAMPED "L.S. '27233" FLUSH	3356+80.41	69.60 LT
	(7) 700	666541.42451	764067.53635	3" AZ. HWY. DEPT. B.C. STAMPED "1967" UP 0.2'	3291+13.84	150.00 RT
* **	(7) 701	666543.51742	764064.81643	ANGLE IRON WITNESS POST	---	---
	(7) 702	665696.02656	764546.45927	3" AZ. HWY. DEPT. B.C. NO STAMPING FLUSH	3299+99.25	550.12 RT
*	(7) 703	665695.59895	764548.11061	ANGLE IRON WITNESS POST	3300+00.84	549.50 RT
	(7) 705	665134.11249	765993.92315	3" AZ. HWY. DEPT. B.C. NO STAMPING FLUSH	3314+99.52	150.00 RT
	(7) 706	664838.90798	766398.00729	3" AZ. HWY. DEPT. B.C. STAMPED "1967" UP 0.4'	3319+99.95	150.00 RT
*	(7) 707	664840.40405	766396.44977	ANGLE IRON WITNESS POST	3319+97.81	149.71 RT
	(7) 708	663953.93967	767609.52799	3" AZ. HWY. DEPT. B.C. STAMPED "1967" UP 0.2'	3335+00.27	149.92 RT
*	(7) 709	663956.01736	767606.85088	ANGLE IRON WITNESS POST	3334+96.88	149.82 RT
	(7) 710	663068.71677	768821.12853	3" AZ. HWY. DEPT. B.C. STAMPED "1967" FLUSH	3350+00.80	150.00 RT
*	(7) 711	663071.09283	768818.86601	ANGLE IRON WITNESS POST	3349+97.57	149.41 RT
	(7) 712	662834.52664	769141.73635	3" AZ. HWY. DEPT. B.C. STAMPED "3353+97.05 1965" UP 0.5'	3353+97.83	149.97 RT
*	(7) 713	662832.50486	769144.50863	ANGLE IRON WITNESS POST	3354+01.26	149.97 RT
	(7) 714	665081.14698	766575.09749	3" AZ. HWY. DEPT. B.C. STAMPED "1967" UP 0.3'	3320+00.05	150.07 LT
*	(7) 715	665078.48477	766577.96988	ANGLE IRON WITNESS POST	3320+03.94	149.61 LT
	(7) 716	664196.01428	767786.51526	3" AZ. HWY. DEPT. B.C. STAMPED "1967" UP 0.5'	3335+00.38	149.95 LT
*	(7) 717	664194.27726	767788.99893	ANGLE IRON WITNESS POST	3335+03.41	150.02 LT
	(7) 718	663311.02296	768998.00785	3" AZ. HWY. DEPT. B.C. STAMPED "1967" DN. 1.0'	3350+00.69	150.00 LT

EXISTING R/W MONUMENTATION CONTINUED

	PT.	NORTHING	EASTING	DESCRIPTION	STATION	OFFSET
*	(7) 719	663313.18810	768995.08862	ANGLE IRON WITNESS POST	3349+97.06	150.03 LT
	(7) 720	663076.66845	769318.83231	3" AZ. HWY. DEPT. B.C. STAMPED "3353+97.05 1965" UP 0.4'	3353+97.99	150.02 LT
*	(7) 721	663078.26346	769316.52138	ANGLE IRON WITNESS POST	3353+95.19	149.94 LT
*	(7) 722	662682.35419	769858.33436	ANGLE IRON WITNESS POST	3360+66.23	149.87 LT
	(7) 723	662670.01371	769880.70386	3" AZ. HWY. DEPT. B.C. STAMPED "X SEC LINE 1965" UP 0.3'	3360+91.58	153.10 LT
*	(7) 724	662671.62335	769877.41541	ANGLE IRON WITNESS POST	3360+87.97	152.46 LT
	(7) 726	662488.26837	770215.78674	3" AZ. HWY. DEPT. B.C. STAMPED "SEC LINE" UP 0.5'	3364+69.36	204.01 LT
*	(7) 727	662489.77226	770212.59945	ANGLE IRON WITNESS POST	3364+65.90	203.35 LT
	(8) 728	662311.67932	770541.70851	3" AZ. HWY. DEPT. B.C. STAMPED "P.T.R. 10-8 16+78.93 1965" UP 0.3'	3368+46.69	303.79 LT
*	(8) 729	662312.79783	770538.93383	ANGLE IRON WITNESS POST	3368+43.60	303.17 LT
	(7) 730	662672.51476	769363.57005	3" AZ. HWY. DEPT. B.C. STAMPED "SEC LINE 1965" UP 0.3'	3356+72.53	149.93 RT
*	(7) 731	662670.78345	769366.01674	ANGLE IRON WITNESS POST	3356+75.52	149.89 RT
	(7) 732	662468.91941	769641.78353	3" AZ. HWY. DEPT. B.C. NO STAMPING FLUSH	3360+17.28	150.22 RT
*	(7) 733	662467.21519	769644.56308	ANGLE IRON WITNESS POST	3360+20.53	149.95 RT
	(8) 734	662107.13840	770137.46153	3" AZ. HWY. DEPT. B.C. STAMPED "P.C. 3366+29.68 1965" FLUSH	3366+30.90	95.95 RT
*	(8) 735	662105.01033	770140.40811	ANGLE IRON WITNESS POST	3366+34.48	95.93 RT
	(8) 736	662049.75750	770216.04533	3" AZ. HWY. DEPT. B.C. STAMPED "SEC LINE 1965" UP 0.4' BENT W.	3367+25.07	96.73 RT
*	(8) 737	662048.56410	770219.18681	ANGLE IRON WITNESS POST	3367+28.27	95.90 RT
	(8) 738	662055.35464	770208.29855	1/2" REBAR W/ NO ID. UP 0.5'	3367+15.67	96.63 RT
	(8) 739	661674.42622	770825.79289	3" AZ. HWY. DEPT. B.C. STAMPED "P.T. E.B. 3374+29.68 1965" UP 0.1'	3374+29.68	96.00 RT
*	(8) 740	661673.21329	770828.76810	ANGLE IRON WITNESS POST	3374+32.88	95.67 RT
	(8) 741	661355.64610	771408.55734	1/2" REBAR W/ NO ID. UP 0.4'	3380+98.43	96.15 RT
	(8) 742	661313.56521	771477.75305	3" AZ. HWY. DEPT. B.C. STAMPED "P.O.T. AHD 3381+79.34 P.I. BK 2852+93.66 1961" UP 0.6'	3381+80.80	96.29 RT
	(7) 744	666261.24415	764959.56142	3" AZ. HWY. DEPT. B.C. STAMPED "1967" UP 0.6'	3299+99.40	149.96 LT
*	(7) 745	666259.63861	764961.53842	ANGLE IRON WITNESS POST	3300+01.95	149.83 LT
	(7) 746	666266.17244	764952.87481	3" AZ. HWY. DEPT. B.C. STAMPED "1967" UP 0.6'	3299+91.10	150.00 LT
*	(7) 747	666267.47450	764950.79831	ANGLE IRON WITNESS POST	3299+88.65	149.83 LT
**	(7) 748	666783.80501	764244.31798	3" AZ. HWY. DEPT. B.C. STAMPED "1967" UP 0.3'	---	---
*	(7) 749	666782.39410	764246.08622	ANGLE IRON WITNESS POST	3291+15.86	149.90 LT
	(8) 750	660442.69058	772564.87231	3" AZ. HWY. DEPT. B.C. STAMPED "EB8 3396+00 1965" UP 0.3'	3396+00.45	95.95 RT
*	(8) 751	660441.69275	772568.51594	ANGLE IRON WITNESS POST	3396+03.72	94.05 RT
* **	754	659630.23122	773527.61717	ANGLE IRON WITNESS POST	---	---
	755	659682.83835	773456.73547	1/2" REBAR W/ PLASTIC CAP STAMPED "L.S. 38001" UP 0.1'	2875+22.02	149.76 RT
	756	660044.09867	773023.51627	1/2" REBAR W/ PLASTIC CAP STAMPED "L.S. 38001" UP 0.2'	2869+72.06	148.83 RT
	757	660042.44009	773023.67507	1/2" REBAR W/ TAG STAMPED "ACE 25379" UP 0.1'	2869+73.26	149.94 RT
	758	660043.76892	773022.95981	1" IRON PIPE W/ NO ID. UP 0.2'	2869+71.87	149.45 RT
	759	660078.12692	772985.88076	1" IRON PIPE W/ NO ID. UP 0.5'	2869+22.61	149.36 RT
	760	662678.56322	771260.58702	3" AZ. HWY. DEPT. B.C. STAMPED "SEC LINE 1965" UP 0.4'	2838+72.62	250.21 RT
*	761	662675.51546	771259.89064	ANGLE IRON WITNESS POST	2838+75.23	251.75 RT
	762	662680.55012	771261.03968	1" IRON PIPE W/ NO ID. UP 0.3'	2838+70.92	249.21 RT
	763	662881.59475	771282.69909	3" AZ. HWY. DEPT. B.C. STAMPED "RW 1965" UP 0.2'	2836+89.79	174.26 RT
*	764	662878.03984	771283.14018	ANGLE IRON WITNESS POST	2836+93.24	174.74 RT
	765	662879.79139	771263.12177	1" IRON PIPE W/ NO ID. UP 0.2'	2836+86.68	193.66 RT
	766	663939.89155	771130.32761	3" AZ. HWY. DEPT. B.C. STAMPED "P.C. 2826+48.77 1965" UP 0.7'	2826+48.83	149.90 RT
*	767	663936.32526	771130.61060	ANGLE IRON WITNESS POST	2826+52.32	149.89 RT
	768	663046.37107	771266.90857	3" AZ. HWY. DEPT. B.C. STAMPED "E.B. 2835+40 1965" UP 0.2'	2835+30.55	150.00 RT
*	769	663043.09915	771267.77435	ANGLE IRON WITNESS POST	2835+33.85	149.90 RT
	770	664586.88058	771081.70570	3" AZ. HWY. DEPT. B.C. STAMPED "2820+00 1965" UP 0.6'	2820+00.02	149.97 RT
*	771	664583.76601	771081.92136	ANGLE IRON WITNESS POST	2820+03.14	149.99 RT
	772	664601.31843	771080.60723	3/4" IRON BAR W/ NO ID. UP 0.1'	2819+85.54	149.98 RT
	774	665305.49566	771000.24426	1" IRON PIPE W/ NO ID. UP 0.2'	2812+77.32	177.42 RT
	775	666183.35337	770962.28463	3" AZ. HWY. DEPT. B.C. STAMPED "2804+00 1965" DN. 0.9'	2803+99.08	149.58 RT
*	776	666179.87203	770962.82613	ANGLE IRON WITNESS POST	2804+02.59	149.30 RT
	777	666787.23337	770916.87826	3" AZ. HWY. DEPT. B.C. NO STAMPING DN. 1.0'	2797+93.50	149.66 RT
*	(5) 777	666787.23337	770916.87826	3" AZ. HWY. DEPT. B.C. NO STAMPING DN. 1.0'	3375+34.88	262.63 RT
*	778	666784.22368	770917.32866	ANGLE IRON WITNESS POST	2797+96.53	149.44 RT
*	(5) 778	666784.22368	770917.32866	ANGLE IRON WITNESS POST	3375+37.02	264.79 RT
	782	668038.65025	770489.35472	3" AZ. HWY. DEPT. B.C. NO STAMPING UP 0.2'	2785+13.60	482.34 RT
*	783	668035.68935	770487.57672	ANGLE IRON WITNESS POST	2785+16.42	484.33 RT
	784	668188.68692	770579.83784	3" AZ. HWY. DEPT. B.C. STAMPED "P.C. 10+50 1965" DN. 0.4'	2783+70.75	380.88 RT
	785	668189.01974	770580.05047	1/2" REBAR W/ NO ID. DN. 0.4'	2783+70.44	380.64 RT
*	786	668185.82487	770578.44101	ANGLE IRON WITNESS POST	2783+73.50	382.49 RT

TABLE CONTINUES ON SHEET RS-24

Click here for I-10 Index

ALL STATION AND OFFSETS BASED ON I-10 MEDIAN ℄ UNLESS OTHERWISE NOTED.
(1) STATION AND OFFSET BASED ON STOREY ROAD ℄.
(5) STATION AND OFFSET BASED ON SR 84 ℄.
(7) STATION AND OFFSET BASED ON I-8 MEDIAN ℄.
(8) STATION AND OFFSET BASED ON I-8 EAST BOUND ℄.
* ADOT ANGLE IRON WITNESS POST NOT USED IN R/W ANALYSIS AND ARE NOT SHOWN ON R/W CORRIDOR SHEETS.
** POINT IS OUTSIDE OF PROJECT LIMITS

CHANGE ORDER REVISIONS			
C.O. NO.	DATE	BY	DESCRIPTION OF REVISIONS

DRAWING NO.	D-11-T-487
SURVEY	Oct.-Dec. 2009
DRAWN/DATE	MGB Oct. 2010
ADOT REVIEW	S. McLain
ROUTE NO.:	I-10
LOCATION:	Val Vista Rd. to Junction I-8

RBF CONSULTING — PLANNING • DESIGN • CONSTRUCTION
15605 NORTH 28TH AVENUE, SUITE 100
PHOENIX, ARIZONA 85032-2602
602.487.2200 • FAX 602.487.2201
www.RBF.com

ARIZONA DEPARTMENT OF TRANSPORTATION
INTERMODAL TRANSPORTATION DIVISION
RIGHT OF WAY PLANS SECTION

HIGHWAY NAME: PHOENIX - CASA GRANDE
FEDERAL AID NO.: UNASSIGNED
PROJECT NO.: 010 PN 188 H7585 01R

REGISTERED LAND SURVEYOR CERTIFICATE NO. 42945 CHAD E. WOOLGAR 6/8/12 Date Signed ARIZONA, U.S.A. Expires 6/30/14

SHEET RS-23

010RW188_RS-23.DGN

RESULTS OF SURVEY

EXISTING R/W MONUMENTATION CONTINUED

	PT.	NORTHING	EASTING	DESCRIPTION	STATION	OFFSET
	787	668176.02489	770601.21241	3" AZ. HWY. DEPT. B.C. STAMPED "P.C. 10+50 1965" DN. 0.6'	2783+84.98	360.51 RT
	788	668176.07354	770601.43202	1/2" REBAR W/ NO ID. DN. 0.6'	2783+84.95	360.29 RT
*	789	668177.69029	770602.43930	ANGLE IRON WITNESS POST	2783+83.41	359.16 RT
	790	668260.00843	770651.77576	3" AZ. HWY. DEPT. B.C. STAMPED "9+51.90 1965" DN. 0.2'	2783+05.01	303.80 RT
*	791	668257.45669	770650.54615	ANGLE IRON WITNESS POST	2783+07.47	305.22 RT
	792	668497.37824	770738.30463	3" AZ. HWY. DEPT. B.C. STAMPED "2780+75 1965" UP 0.4'	2780+74.78	199.75 RT
*	793	668494.28716	770737.73217	ANGLE IRON WITNESS POST	2780+77.82	200.56 RT
	794	668775.37471	770767.53194	3" AZ. HWY. DEPT. B.C. STAMPED "2778+00 1965" UP 0.3'	2777+99.76	149.80 RT
*	795	668772.06508	770767.33887	ANGLE IRON WITNESS POST	2778+03.04	150.24 RT
	796	670570.03793	770632.79530	3" AZ. HWY. DEPT. B.C. STAMPED "ELEV 1446.62 2760+00.00" UP 0.5'	2760+00.04	149.86 RT
*	797	670567.55425	770633.14245	ANGLE IRON WITNESS POST	2760+02.54	149.70 RT
	798	672352.68533	770499.00619	3" AZ. HWY. DEPT. B.C. STAMPED "2742+16.76 BK 2742+12.30 AH ELEV. 1442.44" UP 0.4'	2742+12.38	149.86 RT
*	799	672348.53853	770499.75188	ANGLE IRON WITNESS POST	2742+16.57	149.43 RT
	800	673106.86717	770455.05431	3" AZ. HWY. DEPT. B.C. STAMPED "2734+62.33 ELEV. 1442.72" UP 0.7'	2734+61.79	149.60 RT
	(4) 800	673106.86717	770455.05431	3" AZ. HWY. DEPT. B.C. STAMPED "2734+62.33 ELEV. 1442.72" UP 0.7'	13+43.05	199.99 LT
*	801	673103.91012	770455.25920	ANGLE IRON WITNESS POST	2734+64.73	149.52 RT
*	(4) 801	673103.91012	770455.25920	ANGLE IRON WITNESS POST	13+42.86	202.94 LT
*	805	678745.43531	770469.23322	ANGLE IRON WITNESS POST	2678+30.10	149.49 RT
*	(3) 805	678745.43531	770469.23322	ANGLE IRON WITNESS POST	14+49.08	104.61 RT
	807	680075.40006	770477.50354	3" AZ. HWY. DEPT. B.C. STAMPED "ELEV. 1429.40 2665+00.00" UP 0.2'	2665+00.11	149.96 RT
*	808	680072.16826	770477.56843	ANGLE IRON WITNESS POST	2665+03.34	149.87 RT
	809	681289.23534	770485.60517	3" AZ. HWY. DEPT. B.C. STAMPED "2652+86.20 ELEV. 1.427.53" UP 0.2'	2652+86.25	149.84 RT
*	810	681285.68364	770485.48718	ANGLE IRON WITNESS POST	2652+89.80	149.93 RT
	811	683035.57074	770496.92727	3" AZ. HWY. DEPT. B.C. STAMPED "2635+40.00 ELEV. 1424.25" UP 0.3'	2635+39.87	149.99 RT
	812	683033.96562	770498.47208	3/4" REBAR W/ NO ID. UP 0.2'	2635+41.47	148.43 RT
*	813	683032.39979	770497.76261	ANGLE IRON WITNESS POST	2635+43.04	149.13 RT
	814	683676.66886	770352.45815	3" AZ. HWY. DEPT. B.C. STAMPED "ELEV. 1422.98 2629+00.00" DN. 0.3'	2628+99.74	298.67 RT
*	815	683673.40918	770353.56144	ANGLE IRON WITNESS POST	2629+02.99	297.54 RT
	820	684033.81110	770332.75038	1/2" REBAR W/ NO ID. DN. 0.2'	2625+41.33	320.29 RT
	(2) 820	684033.81110	770332.75038	1/2" REBAR W/ NO ID. DN. 0.2'	16+79.98	99.82 LT
	821	684244.97536	770364.53713	3.5" ADOT A.C. ON 5/8" REBAR STAMPED "LS 25396 287 PN 117 H7059 01R 2007 220 2623+30.00" FLUSH	2623+30.10	288.97 RT
	822	684824.20277	770504.79182	3" AZ. HWY. DEPT. B.C. STAMPED "2617+50.00 ELEV. 1421.10" UP 0.3'	2617+50.56	150.00 RT
*	823	684820.81886	770504.82530	ANGLE IRON WITNESS POST	2617+53.95	149.96 RT
*	(2) 826	683831.98520	769556.61183	ANGLE IRON WITNESS POST	9+03.34	98.69 RT
	(2) 827	683880.65740	769552.56201	CHISELED X IN CONC.	205+11.41	50.00 RT
	828	686206.00660	770508.04591	3" AZ. HWY. DEPT. B.C. STAMPED "ELEV. 1418.66 2603+69.00" UP 0.3'	2603+68.76	149.80 RT
*	829	686203.35783	770508.53204	ANGLE IRON WITNESS POST	2603+71.40	149.31 RT
	830	686587.41496	770508.68861	3.5" ADOT A.C. ON 5/8" REBAR STAMPED "LS 25396 287 PN 117 H7059 01R 2007 246 205 W.C." FLUSH	2599+87.35	150.00 RT
	831	689165.86196	770514.38713	3" AZ. HWY. DEPT. B.C. STAMPED "P.O.T. 2574+08.95 ELEV. 1415.80" DN. 0.2'	2574+08.89	150.00 RT
	(1) 831	689165.79483	770514.38698	3" AZ. HWY. DEPT. B.C. STAMPED "P.O.T. 2574+08.95 ELEV. 1415.80" DN. 0.2'	28+49.90	75.00 RT
*	832	689162.83787	770514.34219	ANGLE IRON WITNESS POST	2574+11.92	150.04 RT
*	(1) 832	689162.83787	770514.34219	ANGLE IRON WITNESS POST	28+49.86	77.96 RT
	(1) 837	689165.98073	770309.09632	1/2" REBAR W/ PLASTIC CAP STAMPED "P.L.S. 26054" DN. 1.3'	26+44.34	75.00 RT
	(1) 838	689099.97929	770308.95519	1/2" REBAR W/ NO ID. DN. 1.2' BENT W.	26+44.02	141.00 RT
	839	695217.91712	770547.59404	3" AZ. HWY. DEPT. B.C. STAMPED "2513+24.65 BK 2513+57.20 AH ELEV 1409.69" UP 0.2'	2513+57.24	150.03 RT
*	840	695214.20043	770547.83238	ANGLE IRON WITNESS POST	2513+60.96	149.77 RT
	843	694554.28000	770543.94957	3" AZ. HWY. DEPT. B.C. STAMPED "2520+20.95 ELEV 1409.04" UP 0.2'	2520+20.89	150.00 RT
*	844	694551.46984	770544.21301	ANGLE IRON WITNESS POST	2520+23.70	149.72 RT
*	(1) 847	689201.97202	769465.01988	ANGLE IRON WITNESS POST	18+00.36	36.73 RT
	(1) 848	689271.96329	769664.41791	3" AZ. HWY. DEPT. B.C. STAMPED "20+00.00" DN. 0.8'	19+99.95	32.73 LT
*	(1) 849	689275.29457	769664.79903	ANGLE IRON WITNESS POST	20+00.34	36.06 LT
	(1) 850	689314.08664	769664.32814	3" AZ. HWY. DEPT. B.C. NO STAMPING DN. 0.3'	19+99.97	74.85 LT
*	(1) 851	689310.40706	769665.19636	ANGLE IRON WITNESS POST	20+00.83	71.17 LT
	(1) 852	689097.69749	769464.64083	1/2" REBAR W/ NO ID. DN. 1.8' BENT E.	17+99.70	141.00 RT
	856	689315.86165	770514.96620	3" AZ. HWY. DEPT. B.C. STAMPED "2572+59.46 ELEV. 1415.29" FLUSH	2572+59.39	150.00 RT
	(1) 856	689315.79437	770514.96583	3" AZ. HWY. DEPT. B.C. STAMPED "2572+59.46 ELEV. 1415.29" FLUSH	28+50.34	75.00 LT
*	857	689318.77730	770515.28414	ANGLE IRON WITNESS POST	2572+56.47	149.70 RT
*	(1) 857	689318.77730	770515.28414	ANGLE IRON WITNESS POST	28+50.66	77.98 LT
	858	691897.48454	770529.24270	3" AZ. HWY. DEPT. B.C. STAMPED "2546+77.71 ELEV 1401.27" UP 0.3'	2546+77.73	150.01 RT
*	859	691894.13217	770529.90007	ANGLE IRON WITNESS POST	2546+81.07	149.33 RT

EXISTING R/W MONUMENTATION CONTINUED

	PT.	NORTHING	EASTING	DESCRIPTION	STATION	OFFSET
	862	697352.35643	770356.33805	3" AZ. HWY. DEPT. B.C. STAMPED "P.O.C. 2491+83.14 ELEV 1407.36" DN. 1.0'	2491+82.55	150.20 RT
*	863	697355.36348	770356.37831	ANGLE IRON WITNESS POST	2491+79.57	149.60 RT
	865	698541.02510	770067.61051	1/2" REBAR W/ PLASTIC CAP STAMPED "L.S. 17288" UP 0.2'	2479+42.47	150.19 RT
	866	698544.14041	770066.83607	1/2" REBAR W/ PLASTIC CAP STAMPED "L.S. 5713" UP 0.2'	2479+39.22	150.04 RT
	868	699860.10784	769580.01063	1" REBAR W/ NO ID. FLUSH	2465+16.60	149.44 RT
	869	699864.64750	769577.20053	3" AZ. HWY. DEPT. B.C. STAMPED "P.O.C. 2465+11.04 ELEV 1411.67" UP 0.4'	2465+11.24	150.17 RT
*	870	699862.21977	769578.48622	ANGLE IRON WITNESS POST	2465+14.02	149.98 RT
	871	699871.44322	769574.06750	1/2" REBAR W/ PLASTIC CAP STAMPED "L.S. 17288" UP 0.4'	2465+03.66	150.28 RT
	872	699871.60691	769574.03413	1/2" REBAR W/ NO ID. FLUSH	2465+03.50	150.24 RT
	874	700322.47598	769361.42690	5/8" REBAR W/ NO ID. UP 0.1'	2459+98.34	150.55 RT
	(5) 875	663816.54290	775513.65093	3" AZ. HWY. DEPT. B.C. STAMPED "ELEV 1464.00 STA 8430+00" DN. 1.2'	3429+99.09	50.11 LT
*	(5) 876	663815.22746	775515.43666	ANGLE IRON WITNESS POST	3430+01.30	50.10 LT
	(5) 877	664996.57233	773898.67234	3" AZ. HWY. DEPT. B.C. STAMPED "ELEV 1460.97 STA 3410.00" DN. 0.8'	3409+98.93	50.33 LT
*	(5) 878	664995.18520	773900.29865	ANGLE IRON WITNESS POST	3410+01.06	50.17 LT
	(5) 881	667693.39989	770239.66908	3/4" REBAR W/ NO ID. DN. 0.2'	3364+52.45	60.70 LT
	(5) 882	667692.06733	770233.98006	3/4" REBAR W/ NO ID. FLUSH	3364+48.71	56.20 LT
	(2) 887	684034.76427	771652.95099	3.5" ADOT A.C. ON 5/8" REBAR STAMPED "LS 25396 287 PN 117 H7059 01R 2007 305 30+00.16" DN. 1.4'	30+00.17	100.00 LT
	(2) 888	684009.91613	771912.81284	3.5" ADOT A.C. ON 5/8" REBAR STAMPED "LS 25396 287 PN 117 H7059 01R 2007 328 32+59.84" DN. 0.2'	32+60.02	75.00 LT
	(2) 889	684054.93904	771957.54961	NL W/ TAG	33+04.78	120.00 LT
	(2) 890	684054.98961	772044.08959	NL W/ TAG	33+91.32	120.00 LT
	(2) 891	684010.01874	772088.39458	3.5" ADOT A.C. ON 5/8" REBAR STAMPED "LS 25396 287 PN 117 H7059 01R 2007 331 34+35.42" FLUSH	34+35.60	75.00 LT
	(2) 895	684044.50418	772917.28367	3.5" ADOT A.C. ON 5/8" REBAR STAMPED "LS 25396 287 PN 117 H7059 01R 2007 318 42+64.49" DN. 1.3'	42+64.51	109.00 LT
	960	698488.22549	770083.87568	5/8" REBAR W/ NO ID. UP 0.3'	2479+98.45	149.70 RT
	964	682077.25829	770490.58700	3" AZ. HWY. DEPT. B.C. NO STAMPING UP 0.9'	2644+98.20	150.03 RT
	973	665335.54475	771326.33164	1" IRON PIPE W/ NO ID. UP 0.3'	2812+71.76	150.00 LT
	(7) 980	665330.65106	766234.61190	1/2" REBAR W/ TAG STAMPED "RLS 15933" UP 0.1'	3315+77.93	150.68 LT
	984	693898.02752	770845.69844	2" A.C. ON 1/2" REBAR STAMPED "I-10" UP 0.2'	2526+75.46	155.38 LT
	985	686781.43726	770809.11815	1/2" REBAR W/ PLASTIC CAP STAMPED "L.S. 31034" FLUSH	2597+92.66	150.00 LT
	(6) 1052	661371.72741	773266.72644	1/2" REBAR W/ TAG STAMPED "L.S. 16602" UP 0.3'	40+29.15	65.57 LT
	(5) 1060	665576.74715	773104.80577	1/2" REBAR W/ PLASTIC CAP STAMPED "L.S. 87495" FLUSH	3400+15.66	50.53 LT
	(5) 1061	665576.65277	773104.45184	1/2" REBAR W/ NO ID. FLUSH	3400+15.43	50.25 LT
	(5) 1062	665583.32364	773095.35437	1" IRON PIPE W/ NO ID. FLUSH	3400+04.15	50.27 LT
	1063	667050.02022	771576.74123	1/2" REBAR W/ PLASTIC CAP STAMPED "L.S. 37495" DN. 0.3'	2795+80.83	528.01 LT
	1064	667050.18672	771576.82714	1/2" REBAR W/ PLASTIC CAP STAMPED "L.S. 10546" DN. 0.3'	2795+80.67	528.11 LT
	1067	677505.42311	770759.36104	2" A.C. ON 1/2" REBAR STAMPED "EL PASO NATURAL GAS R-O-W" FLUSH	2690+68.02	149.92 LT
	1068	677468.82446	770759.16397	2" A.C. ON 1/2" REBAR STAMPED "EL PASO NATURAL GAS R-O-W" FLUSH	2691+04.62	150.00 LT
	1069	677073.30994	770755.77248	3" AZ. HWY. DEPT. B.C. STAMPED "2695+00.00 ELEV." FLUSH	2695+00.15	149.61 LT
*	1070	677076.36161	770755.28308	ANGLE IRON WITNESS POST	2694+97.10	149.09 LT
	(2) 1112	683865.42643	772911.83916	3" ADOT B.C. STAMPED "42+59.18" FLUSH	42+58.96	70.07 RT
	(2) 1114	683870.49711	772906.97966	1/2" REBAR W/ NO ID. UP 0.2'	42+54.11	65.00 RT
	1120	684596.32135	770873.19475	3.5" ADOT A.C. ON 5/8" REBAR STAMPED "LS 25396 287 PN 117 H7059 01R 2007 503 2619+77.59" FLUSH	2619+77.63	218.91 LT
	1122	685204.09283	770805.63213	3.5" ADOT A.C. ON 5/8" REBAR STAMPED "LS 25396 287 PN 117 H7059 01R 2007 502 2613+69.97" FLUSH	2613+70.00	150.00 LT
	2310	659631.95236	773524.94418	3" AZ. HWY. DEPT. B.C. STAMPED "3408+24.23 1965" UP 0.4'	2876+04.96	150.00 RT
	(6) 2337	660023.97446	773768.90832	3" ADOT A.C. IN CONC. NO STAMPING FLUSH	55+00.00	60.00 LT

ALL STATION AND OFFSETS BASED ON I-10 MEDIAN ℄ UNLESS OTHERWISE NOTED.

(1) STATION AND OFFSET BASED ON STOREY ROAD ℄.
(2) STATION AND OFFSET BASED ON SR 287 ℄.
(3) STATION AND OFFSET BASED ON EARLEY ROAD ℄.
(4) STATION AND OFFSET BASED ON SELMA ROAD ℄.
(5) STATION AND OFFSET BASED ON SR 84 ℄.
(6) STATION AND OFFSET BASED ON RAMP C ℄.
(7) STATION AND OFFSET BASED ON I-8 MEDIAN ℄.
* ADOT ANGLE IRON WITNESS POST NOT USED IN R/W ANALYSIS AND ARE NOT SHOWN ON R/W CORRIDOR SHEETS.

Click here for I-10 Index

CHANGE ORDER REVISIONS			
C.O. NO.	DATE	BY	DESCRIPTION OF REVISIONS

DRAWING NO.	D-11-T-487
SURVEY	Oct.-Dec. 2009
DRAWN/DATE	MGB Oct. 2010
ADOT REVIEW	S. McLain
ROUTE NO.:	I-10
LOCATION:	Val Vista Rd. to Junction I-8

RBF CONSULTING — PLANNING • DESIGN • CONSTRUCTION, 16005 NORTH 28TH AVENUE, SUITE 100, PHOENIX, ARIZONA 85032-2002, 602.467.2200 • FAX 602.467.2201, www.RBF.com

ARIZONA DEPARTMENT OF TRANSPORTATION
INTERMODAL TRANSPORTATION DIVISION
RIGHT OF WAY PLANS SECTION

HIGHWAY NAME: PHOENIX - CASA GRANDE
FEDERAL AID NO.: UNASSIGNED
PROJECT NO.: 010 PN 188 H7585 01R

REGISTERED LAND SURVEYOR, CERTIFICATE NO. 42945, CHAD E. WOOLGAR, 6/8/12, ARIZONA, U.S.A., Expires 6/30/14

SHEET RS-24

010RW188_RS-24.DGN

6/8/2012 12:09:45 PM H:\PDATA\45104363\CADD\MAPPING\ROS\010RW188_RS-24.DGN

RESULTS OF SURVEY

CALCULATED POINTS

PT.	NORTHING	EASTING	DESCRIPTION	PT.	NORTHING	EASTING	DESCRIPTION	PT.	NORTHING	EASTING	DESCRIPTION	PT.	NORTHING	EASTING	DESCRIPTION
3000	701725.22058	768714.27694	(C)	3062	659757.88916	773947.61677	(C)	3124	667981.64169	770454.65548	(C)	3188	681893.98483	770789.42112	(C)
3001	695281.25994	759238.63874	(C)	3063	659509.53099	774241.95608	(C)	3125	667655.43734	770258.37173	(C)	3189	682248.84515	770791.75311	(C)
3002	695217.85912	770697.62335	(C)	3066	662682.49044	771674.45774	(C)	3126	667009.21631	770956.51009	(C)	3192	683839.83190	772968.77873	(C)
3003	694553.08217	770693.94524	(C)	3068	661780.24406	772896.04521	(C)	3127	666788.05933	770937.15305	(C)	3193	683840.51041	772923.60912	(C)
3004	691897.18164	770679.25055	(C)	3070	660048.81785	773673.17390	(C)	3128	666804.03726	770915.28073	(C)	3194	683864.95466	771968.92201	(C)
3005	689240.77511	770664.55306	(C)	3071	668937.30586	768455.29587	(C)	3129	665332.88450	771025.68765	(C)	3195	683853.50804	772923.85341	(C)
3006	686587.34272	770658.68882	(C)	3072	668109.84389	769588.01506	(C)	3130	663939.53232	771130.25579	(C)	3196	683869.76399	771652.53604	(C)
3007	683934.17976	770652.82518	(C)	3073	667978.89092	769761.27746	(C)	3131	662882.20760	771281.93781	(C)	3197	683834.76385	771652.30287	(C)
3008	681288.51417	770635.43899	(C)	3074	667617.12985	770239.91946	(C)	3132	662831.78125	770731.13126	(C)	3198	683834.39560	771022.17740	(C)
3009	674253.23469	770584.79518	(C)	3075	667314.38868	770640.47288	(C)	3133	662679.16560	771262.76942	(C)	3199	683604.59175	771004.66702	(C)
3010	674079.58781	793502.45733	(C)	3076	663704.41116	775582.19944	(C)	3134	662312.38054	770540.99035	(C)	3200	682990.94710	770796.62989	(C)
3011	672364.43944	770648.40609	(C)	3077	697352.60830	770356.48997	(C)	3135	662671.98451	769876.54704	(C)	3201	681288.30142	770785.44083	(C)
3012	663950.75794	771279.83515	(C)	3078	697211.48088	770381.85852	(C)	3136	662679.91857	769861.88721	(C)	3202	678737.91503	771568.74636	(C)
3013	664379.54503	776993.34796	(C)	3079	695218.68904	770547.62565	(C)	3137	664347.72560	767578.92407	(C)	3203	678637.91639	771568.09933	(C)
3014	659753.07307	773613.43019	(C)	3081	691897.82666	770529.25182	(C)	3138	665330.25891	766233.99190	(C)	3204	678537.91807	771567.33388	(C)
3018	699870.86215	769738.53872	(C)	3082	689315.98027	770309.67359	(C)	3139	663977.33896	767577.36253	(C)	3205	678540.03479	770767.28052	(C)
3019	698040.52656	770360.63477	(C)	3083	689314.23721	769664.05636	(C)	3140	662674.09582	769361.29555	(C)	3206	675973.26542	770747.83214	(C)
3020	697210.51623	770534.22718	(C)	3084	689239.23748	769664.25905	(C)	3141	662106.91546	770137.67546	(C)	3207	674252.09818	770734.79087	(C)
3021	673307.53660	770597.14509	(C)	3085	689238.69698	769464.25978	(C)	3142	662056.05267	770208.40277	(C)	3208	673462.33613	771596.77747	(C)
3022	670649.58440	770777.10235	(C)	3086	684244.51453	770364.51222	(C)	3143	661483.57766	771182.47391	(C)	3209	673413.29595	771797.01983	(C)
3023	667986.43490	770976.96611	(C)	3087	684033.99290	770333.04762	(C)	3144	660442.87486	772564.43141	(C)	3210	673313.29778	771797.49978	(C)
3024	667015.33864	771049.84483	(C)	3088	684033.97250	770298.14661	(C)	3145	660411.95540	772654.25895	(C)	3211	673213.29894	771797.97973	(C)
3025	666818.80257	771064.59445	(C)	3089	684030.66144	769553.13788	(C)	3146	660153.83512	772905.21431	(C)	3212	673112.58016	771648.46103	(C)
3026	665334.21463	771176.00965	(C)	3090	683980.66047	769553.03143	(C)	3147	660044.02992	773021.85332	(C)	3213	673108.29128	770754.86451	(C)
3027	662681.25309	771521.24677	(C)	3091	683972.20502	767651.53323	(C)	3148	701809.57172	768838.31276	(C)	3214	672375.66506	770797.98546	(C)
3028	660366.38526	772904.01603	(C)	3092	683872.20600	767651.97789	(C)	3149	699870.29876	769902.28346	(C)	3215	670650.53694	770927.45268	(C)
3029	660045.67467	773245.59468	(C)	3093	683830.65542	769552.22890	(C)	3150	698597.75028	770363.99212	(C)	3216	669118.45124	771042.43249	(C)
3030	666662.61476	764155.92717	(C)	3094	683833.97195	770297.26752	(C)	3151	697209.55197	770686.53313	(C)	3217	668770.55338	771199.22467	(C)
3031	666079.88403	764953.59305	(C)	3095	683833.99234	770332.15717	(C)	3152	695217.02921	770847.62106	(C)	3222	666693.32243	771575.41838	(C)
3032	665330.54230	765979.32296	(C)	3096	683674.44509	770352.10959	(C)	3154	691896.53662	770829.24928	(C)	3223	666870.85964	771145.90762	(C)
3033	664162.53228	767578.14330	(C)	3097	683033.47583	770496.90290	(C)	3155	689315.68812	770814.96983	(C)	3224	666569.80022	771235.92965	(C)
3034	662673.04799	769617.01090	(C)	3098	681288.72691	770485.43715	(C)	3156	689315.19664	771664.69017	(C)	3225	666540.51869	771276.01338	(C)
3035	662241.47587	770207.76465	(C)	3099	678740.82547	770468.69342	(C)	3157	689240.19687	771664.27327	(C)	3227	663961.98355	771429.41452	(C)
3036	666618.98627	764124.10647	(C)	3100	678741.36772	770263.74121	(C)	3158	689240.19676	771664.45508	(C)	3228	663816.13811	771442.28630	(C)
3037	662184.43329	770194.30571	(C)	3101	678735.10752	769518.68473	(C)	3159	684273.63408	770997.57848	(C)	3229	660757.11348	773417.53724	(C)
3038	666810.93972	773574.17630	(C)	3102	678635.09846	769518.02735	(C)	3160	684010.48321	772883.16444	(C)	3230	660262.38998	773604.79331	(C)
3039	661759.07106	770871.08363	(C)	3103	678535.08836	769517.25152	(C)	3161	684044.53484	772969.75066	(C)	3231	660049.39298	773751.41131	(C)
3040	661568.22250	771227.76465	(C)	3104	678541.37077	770262.32185	(C)	3162	662493.19476	770206.89837	(C)	3232	665657.51292	772908.58311	(C)
3041	656516.35384	768524.67197	(C)	3105	678540.82852	770467.27792	(C)	3163	667979.12160	769900.03979	(C)	3233	698779.79360	770717.33099	(C)
3042	660538.06466	772605.59455	(C)	3106	675972.91312	770447.82086	(C)	3164	667730.36405	770240.56595	(C)	3234	673307.52460	770577.62954	(C)
3043	660376.06223	772765.24641	(C)	3107	674254.37121	770434.79948	(C)	3165	667668.70180	770240.21390	(C)	3235	661313.30159	771477.77069	(C)
3044	666012.82020	764953.85161	(C)	3108	673455.74616	770223.92896	(C)	3166	665719.16458	772908.95071	(C)	3236	663495.96914	771401.85275	(C)
3045	665330.64431	765887.64214	(C)	3109	673452.83208	769546.87448	(C)	3167	667978.84042	769730.89864	(C)	3237	662386.39075	771696.27991	(C)
3046	664095.86268	767577.86222	(C)	3110	673402.18696	769397.09516	(C)	3168	667607.03803	770239.86184	(C)	3238	661736.47423	773151.69517	(C)
3047	662673.42521	769524.95337	(C)	3111	673302.18789	769397.52556	(C)	3169	667545.37503	770239.50978	(C)	3239	660149.86405	773483.07150	(C)
3048	662174.46345	770207.99527	(C)	3112	673303.04869	769597.52325	(C)	3170	667668.96831	770070.32197	(C)	3240	661948.08971	770517.82256	(C)
3051	664578.57356	771298.90452	(C)	3113	673203.04909	769597.83169	(C)	3171	670613.82112	772565.41956	(C)	3241	661157.75583	771994.89472	(C)
3052	663957.48540	771357.96573	(C)	3114	673205.74039	770223.12636	(C)	3172	667533.64220	770239.44280	(C)	3242	683930.65911	769552.83676	(C)
3053	664489.65067	776954.22004	(C)	3115	673105.74065	770223.43480	(C)	3173	667497.10745	770288.63104	(C)	3243	683980.65859	769552.61443	(C)
3054	663047.87783	771520.75399	(C)	3116	673106.85041	770454.65549	(C)	3174	665583.53093	772908.14200	(C)	3244	683830.66011	769553.28143	(C)
3055	663415.24971	772905.23188	(C)	3117	672353.21383	770498.82673	(C)	3176	667978.41864	769477.18692	(C)	3245	662096.77857	770151.59438	(C)
3056	662107.33954	772321.18384	(C)	3118	670648.63185	770626.75202	(C)	3177	667422.04901	770238.80567	(C)	3246	661861.43909	772895.58746	(C)
3057	662001.79508	772557.53885	(C)	3119	668775.50201	770767.32646	(C)	3178	665472.55719	772907.48032	(C)	3487	667993.31139	771726.29088	(C)
3058	660839.20420	772038.38323	(C)	3120	668497.52989	770738.04607	(C)	3184	701640.86929	768590.24122	(C)	**3488**	**666886.70384**	**771141.16993**	**(C)**
3059	661099.51367	773284.72952	(C)	3121	668260.30126	770651.50749	(C)	3185	699871.42698	769574.37609	(C)	**3489**	**667020.85547**	**770957.52878**	**(C)**
3060	660744.84669	773358.80457	(C)	3122	668176.24506	770600.92918	(C)	3186	675973.08927	770597.82650	(C)				
3061	661105.27566	775084.51708	(C)	3123	668189.13454	770579.50813	(C)	3187	679638.34139	770774.59799	(C)				

Click here for I-10 Index

CHANGE ORDER REVISIONS			
C.O. NO.	DATE	BY	DESCRIPTION OF REVISIONS
PM-15-082	12/18/15	JPK	Added Points 3488 and 3489

DRAWING NO.	D-11-T-487
SURVEY	Oct.-Dec. 2009
DRAWN/DATE	MGB Oct. 2010
ADOT REVIEW	S. McLain
ROUTE NO.:	I-10
LOCATION:	Val Vista Rd. to Junction I-8

RBF CONSULTING — PLANNING • DESIGN • CONSTRUCTION
16605 NORTH 28TH AVENUE, SUITE 100
PHOENIX, ARIZONA 85032-2602
602.467.2200 • FAX 602.467.2201
www.RBF.com

ARIZONA DEPARTMENT OF TRANSPORTATION
INTERMODAL TRANSPORTATION DIVISION
RIGHT OF WAY PLANS SECTION

HIGHWAY NAME: PHOENIX - CASA GRANDE
FEDERAL AID NO.: UNASSIGNED
PROJECT NO.: 010 PN 188 H7585 01R

REGISTERED LAND SURVEYOR CERTIFICATE NO. 42945 CHAD E. WOOLGAR 6/8/12 ARIZONA, U.S.A. Expires 6/30/14

SHEET RS-25

010RW188_RS-25.DGN

6/8/2012 10:37:44 AM H:\PDATA\451043G3\CADD\MAPPING\RDS\010RW188_RS-25.DGN