ARIZONA
DEPARTMENT OF TRANSPORTATION

HIGHWAYS DIVISION
STRUCTURES SECTION

STANDARD DRAWINGS

1992

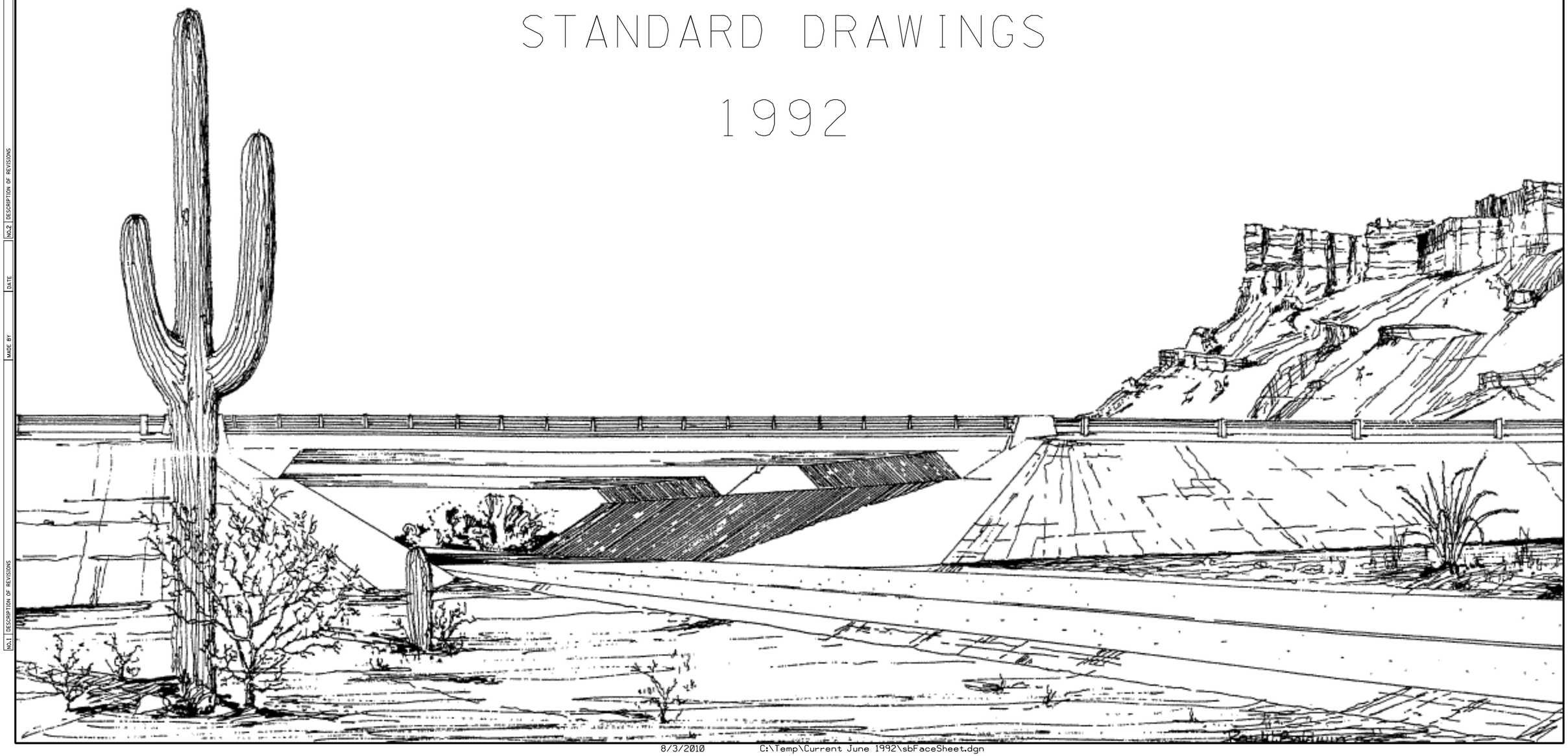

NO.	DESCRIPTION OF REVISIONS	MADE BY	DATE	NO.	DESCRIPTION OF REVISIONS	MADE BY	DATE

TABLE OF CONTENTS - STRUCTURES SECTION

REINFORCED CONCRETE BOX CULVERTS

B-01.10 Miscellaneous Details for Standard Box Culverts
B-01.11 Box Culvert Extension Details
B-02.10 Single Barrel Box Culvert
B-02.20 Double Barrel Box Culvert
B-02.25 Double Barrel Box Culvert
B-02.30 Triple Barrel Box Culvert
B-02.35 Triple Barrel Box Culvert
B-02.40 Four Barrel Box Culvert
B-02.45 Four Barrel Box Culvert
B-02.50 Five Barrel Box Culvert
B-02.55 Five Barrel Box Culvert
B-02.60 Six Barrel Box Culvert
B-02.65 Six Barrel Box Culvert
B-02.70 Culvert Quantities
B-03.10 16' x 14' Equipment Pass
B-04.10 Outlet Wings, Culvert Height 3' to 7', Skew 0° to 20°
B-04.20 Outlet Wings, Culvert Height 8' to 12', Skew 0° to 20°
B-04.30 Inlet Wings, Culvert Height 3' to 7', Skew 0° to 20°
B-04.40 Inlet Wings, Culvert Height 8' to 12', Skew 0° to 20°
B-04.50 Outlet Wings, Culvert Height 3' to 7', Skew 25° to 45°
B-04.60 Outlet Wings, Culvert Height 8' to 12', Skew 25° to 45°
B-04.70 Inlet Wings, Culvert Height 3' to 7', Skew 25° to 45°
B-04.80 Inlet Wings, Culvert Height 8' to 12', Skew 25° to 45°
B-05.10 Headwall Quantities, 2:1 Slope
B-05.20 Headwall Quantities, 4:1 Slope
B-05.30 Headwall Quantities, 6:1 Slope
B-06.10 Outlet Apron Details
B-06.20 Outlet Apron Dimensions & Quantities, 2:1 Slope
B-06.30 Outlet Apron Dimensions & Quantities, 4:1 Slope
B-06.40 Outlet Apron Dimensions & Quantities, 6:1 Slope
B-08.10 Inlet or Outlet Level Wings, Height 3' to 7'
B-08.20 Inlet or Outlet Level Wings, Height 8' to 12'

CONTINUOUS SPAN CONCRETE SLAB BRIDGES

B-09.10 Continuous Span Slab, HS20-44 Loading
B-09.20 Continuous Span Slab with Hinge, HS20-44 Loading
B-09.30 Continuous Span Slab, Interstate Loading
B-09.40 Continuous Span Slab with Hinge, Interstate Loading
B-10.10 Slab Hinge Joint and Hinge Span Reinforcing Details
B-10.11 Slab Hinge Joint and Hinge Span Reinforcing Details (Stud Alternate)

REINFORCED CONCRETE HEADWALLS FOR PIPE CULVERTS

B-11.10 Pipe Culvert Headwalls, Miscellaneous Details
B-11.11 Inlet and Outlet Headwalls, 18" to 42" Pipes
B-11.12 Inlet and Outlet Headwalls, Right Angle Pipe Culverts, 48" to 84" Pipes
B-11.13 Inlet and Outlet Headwalls, Skewed Pipe Culverts, 48" to 84" Pipes
B-11.14 Multipipe Headwalls, 48" - 84" Pipes
B-12.10 Inlet Headwalls, Right Angle Pipe Culvert
B-12.20 Inlet Headwalls, Right Angle Pipe Culvert, 2:1 Slope
B-12.30 Inlet Headwalls, Right Angle Pipe Culvert, 4:1 Slope
B-12.40 Inlet Headwalls, Right Angle Pipe Culvert, 6:1 Slope
B-12.50 Outlet Headwalls, Right Angle Pipe Culvert
B-12.60 Outlet Headwalls, Right Angle Pipe Culvert, 2:1 Slope
B-12.70 Outlet Headwalls, Right Angle Pipe Culvert, 4:1 Slope
B-12.80 Outlet Headwalls, Right Angle Pipe Culvert, 6:1 Slope
B-13.10 Inlet Headwalls, 15° Skew Pipe Culvert
B-13.20 Inlet Headwalls, 15° Skew Pipe Culvert, 2:1 Slope
B-13.30 Inlet Headwalls, 15° Skew Pipe Culvert, 4:1 Slope
B-13.40 Inlet Headwalls, 15° Skew Pipe Culvert, 6:1 Slope
B-13.50 Outlet Headwalls, 15° Skew Pipe Culvert
B-13.60 Outlet Headwalls, 15° Skew Pipe Culvert, 2:1 Slope
B-13.70 Outlet Headwalls, 15° Skew Pipe Culvert, 4:1 Slope
B-13.80 Outlet Headwalls, 15° Skew Pipe Culvert, 6:1 Slope
B-14.10 Inlet Headwalls, 30° Skew Pipe Culvert
B-14.20 Inlet Headwalls, 30° Skew Pipe Culvert, 2:1 Slope
B-14.30 Inlet Headwalls, 30° Skew Pipe Culvert, 4:1 Slope
B-14.40 Inlet Headwalls, 30° Skew Pipe Culvert, 6:1 Slope
B-14.50 Outlet Headwalls, 30° Skew Pipe Culvert
B-14.60 Outlet Headwalls, 30° Skew Pipe Culvert, 2:1 Slope
B-14.70 Outlet Headwalls, 30° Skew Pipe Culvert, 4:1 Slope
B-14.80 Outlet Headwalls, 30° Skew Pipe Culvert, 6:1 Slope
B-15.10 Inlet Headwalls, 45° Skew Pipe Culvert
B-15.20 Inlet Headwalls, 45° Skew Pipe Culvert, 2:1 Slope
B-15.30 Inlet Headwalls, 45° Skew Pipe Culvert, 4:1 Slope
B-15.40 Inlet Headwalls, 45° Skew Pipe Culvert, 6:1 Slope
B-15.50 Outlet Headwalls, 45° Skew Pipe Culvert
B-15.60 Outlet Headwalls, 45° Skew Pipe Culvert, 2:1 Slope
B-15.70 Outlet Headwalls, 45° Skew Pipe Culvert, 4:1 Slope
B-15.80 Outlet Headwalls, 45° Skew Pipe Culvert, 6:1 Slope
B-16.10 Multipipe Headwalls without Apron
B-16.20 Multipipe Headwalls with Outlet Apron
B-17.10 Outlet Aprons
B-17.20 Outlet Apron Steel List 2:1 Slope
B-17.30 Outlet Apron Steel List 4:1 Slope
B-17.40 Outlet Apron Steel List 6:1 Slope

TABLE OF CONTENTS - STRUCTURES SECTION

RETAINING WALLS

B-18.10 Cantilever Retaining Wall Details
B-18.20 Cantilever Retaining Walls on Spread Footings
B-18.30 Cantilever Retaining Walls on Spread Footings
B-18.40 Cantilever Retaining Walls with Barrier
B-18.50 Masonry Retaining Walls

MISCELLANEOUS STANDARDS

B-19.10 Miscellaneous Details for Bridges
B-19.11 Approach Slab Details
B-19.12 Anchor Slab Details (PCC Pavement Greater than 700 Ft.)
B-19.13 Anchor Slab Details (PCC Pavement 300 Ft. to 700 Ft.)
B-19.14 Anchor Slab Details (PCC Pavement less than 300 Ft.)
B-19.20 Slope Paving Details, Underpass
B-19.21 Slope Paving Details, Overpass
B-19.30 Structural Excavation - Payment Limits
B-19.40 Structure Backfill - Payment Limits
B-19.50 Structural Excavation & Structure Backfill for R.C.B. Culvert
B-20.10 Precast and Cast-in-Place Concrete Piles
B-20.20 Prestressed Concrete Piles
B-21.18 Bridge Concrete Barrier Details
B-21.19 Bridge Concrete Barrier Transition with Curb
B-21.20 Bridge Concrete Barrier Transition
B-21.21 Block and Terminal Connector Assembly Details
B-21.30 Barrier Junction Box
B-22.40 Bridge Pedestrian Rail
B-22.41 Bridge Pedestrian Rail
B-22.50 Pedestrian Fence Details with Curb
B-22.60 Pedestrian Fence Details with Parapet
B-22.70 6'-0 High Fence Details with Parapet or Barrier
B-23.10 Rail Bank Protection for Bridges
B-24.20 Compression Seal Joint
B-30.10 Concrete Sound Barrier Walls
B-30.20 Masonry Sound Barrier Walls
B-40.10 Tubular Sign Structures, Tubular Cantilever
B-40.20 Tubular Sign Structures, Tubular Overhead
B-40.30 Tubular Sign Structures, Foundation Details
B-40.40 Tubular Sign Structures, Frame Details
B-40.50 Tubular Sign Structures, Sign Connection Details
B-40.60 Tubular Sign Structures, Misc. Details

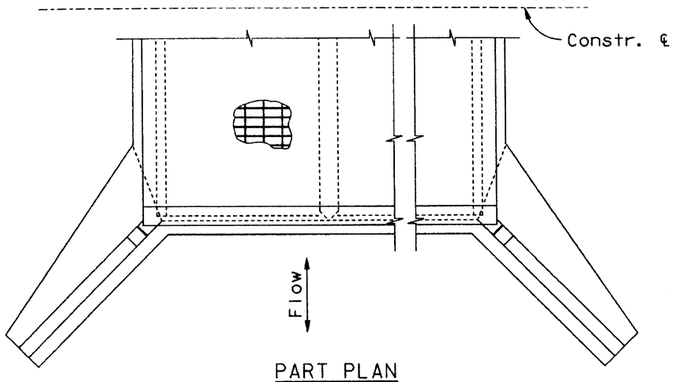

PART PLAN
Showing Inlet & Outlet Details

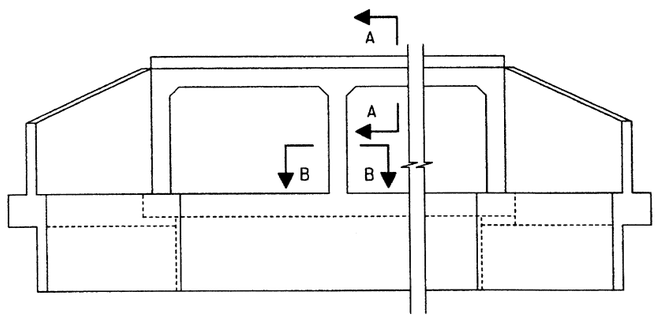

TYPICAL ELEVATION-OUTLET END

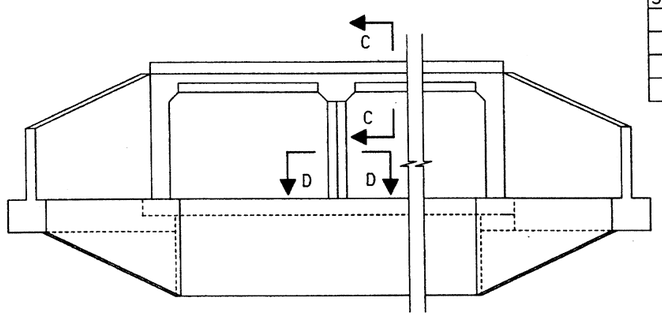

TYPICAL ELEVATION-INLET END

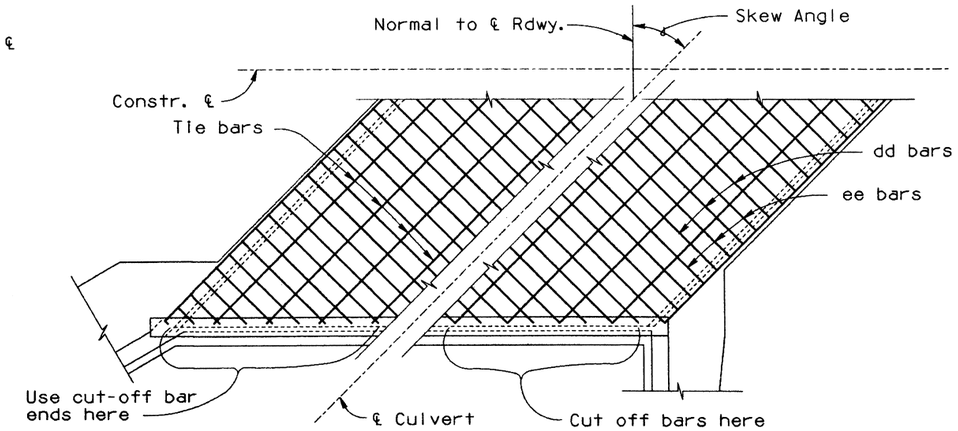

PART PLAN-SKEWED CULVERT
Showing Reinf. Steel Placement

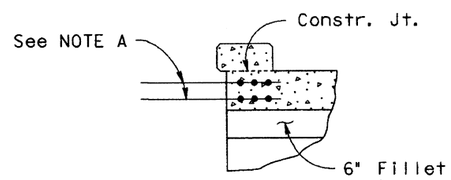

SECTION A-A

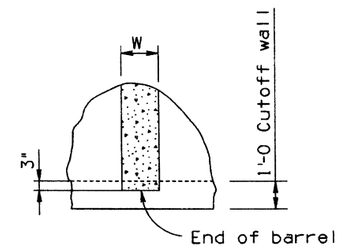

SECTION B-B

Span 'S'	Dim. 'X'
6'	3"
8'	4"
10'	5"
12'	6"

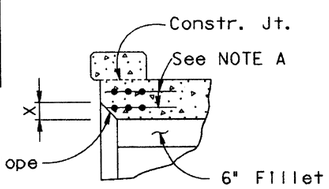

SECTION C-C

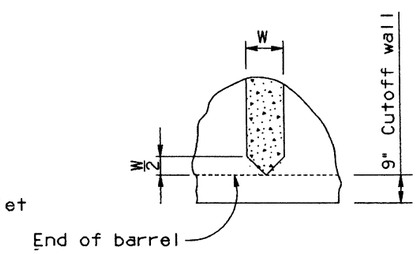

SECTION D-D

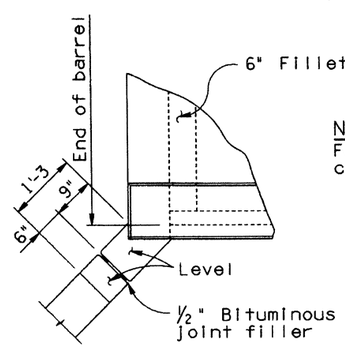

WINGWALL JOINT DETAIL
For all barrels under 8ft. (H<8')

NOTE
Footing shall be contiuous with no joint.

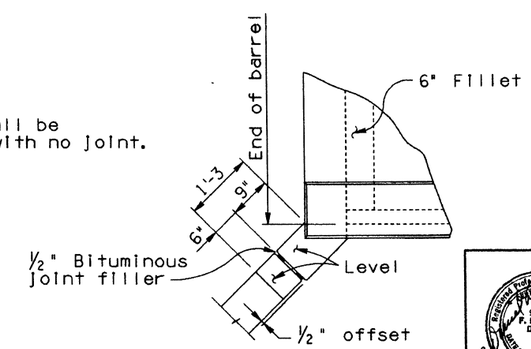

WINGWALL JOINT DETAIL
For all barrels 8ft. and over (H≥8')

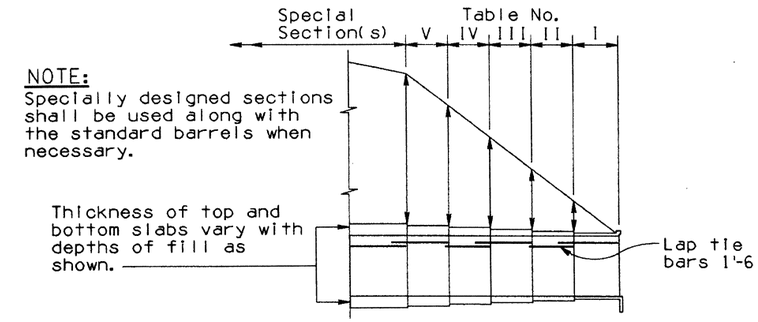

NOTE:
Specially designed sections shall be used along with the standard barrels when necessary.

DIAGRAM SHOWING TABLES TO BE USED FOR VARIOUS FILL HEIGHTS

NOTE: Culvert barrels always begin and end with Table No. I.

GENERAL NOTES:

Construction Specification - Arizona Department of Transportation Standard Specifications for Road and Bridge Construction, latest Edition.

Design Specifications - AASHTO Standard Specifications for Highway Bridges, Edition of 1989 and 1990 Interim Specifications.

Loading Class - HS20-44 and/or Interstate Alternate Loading.

All concrete shall be Class "S" unless noted otherwise.

Reinforcing steel shall conform to ASTM Specification A615. Bar sizes #6 and smaller shall be designed as Grade 40 but may be furnished as Grade 40 or Grade 60. Bar sizes #7 and larger shall be designed and furnished as Grade 60.

All bend dimensions for reinforcing steel shall be out-to-out of bars. All placement dimensions for reinforcing steel shall be to center of bars unless noted otherwise.

All reinforcing steel shall have 2 inch clear cover unless noted otherwise.

Stresses:
Concrete ..... f'c = 3000 psi
Grade 40 reinforcing steel ..... fs = 20000 psi
Grade 60 reinforcing steel ..... fs = 24000 psi

Chamfer all exposed corners ¾" as per Standard B-19.10 unless noted otherwise.

Dimensions shall not be scaled from drawings.

QUANTITY NOTE:

Total Box Culvert Quantities include Barrel Quantities and Headwall Quantities. Add Apron Quantity when apron is used.
Standard headwall quantities include wings, curb and cut-off wall.
Barrel Quantities are obtained by mutiplying length of box by quantities per linear foot of box.

JOINT NOTE:

All structures shall have formed Constr. Joints in top slab and walls (optional in floor slab) spaced not more than 38'-6" apart or as shown. Reinforcing steel shall project 1'-6" thru the joint. The joint shall be made with ¼" plywood bulkhead which shall be left in place. Joints shall be perpendicular to the centerline of the box.

NOTE A:

For culverts skewed over 5° to 30° use 3#7 bars* top and bottom of slab. For culverts skewed over 30° to 45°, use 3#8 bars* top and bottom of slab. For culverts skewed over 45°, a special edge beam design is required.
*Reinforcing bar quantities have to be calculated.

NO	DESCRIPTION OF REVISIONS	MADE BY	DATE
1	Revised & Modified Standards.	J. M.	4-92
2			
3			
4			

DESIGN	C. H.	4-92
DRAWN	K. W.	4-92
CHECKED		

DESIGN APPROVED	ARIZONA DEPARTMENT OF TRANSPORTATION HIGHWAYS DIVISION STANDARD DRAWINGS	REVISION 4-92
APPROVED FOR DISTRIBUTION	MISCELLANEOUS DETAILS FOR STANDARD BOX CULVERTS	STANDARD NO. B-01.10

Registered Professional Engineer (Civil) CERTIFICATE NO. 9910 K. DANIEL DAVIS Date Signed 5-14-92 Arizona U.S.A.

ZFIL0051020350811B.DGN43 VIEW NAME:
07-MAY-1992 13:34

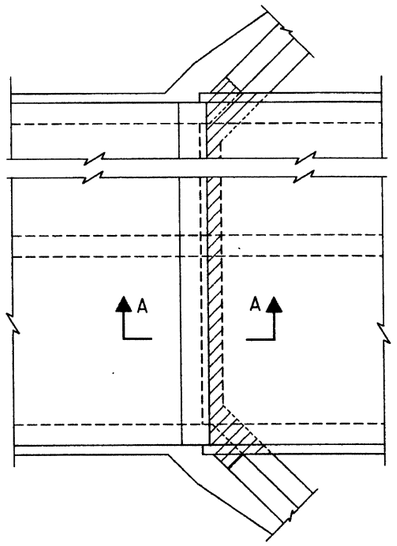

RIGHT ANGLE CULVERT

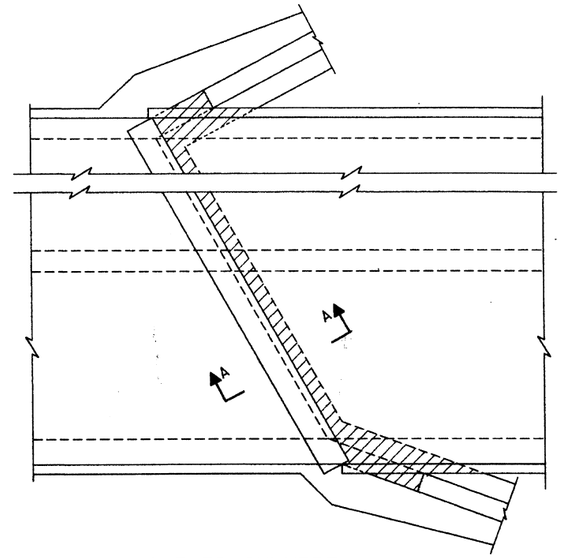

SKEWED CULVERT

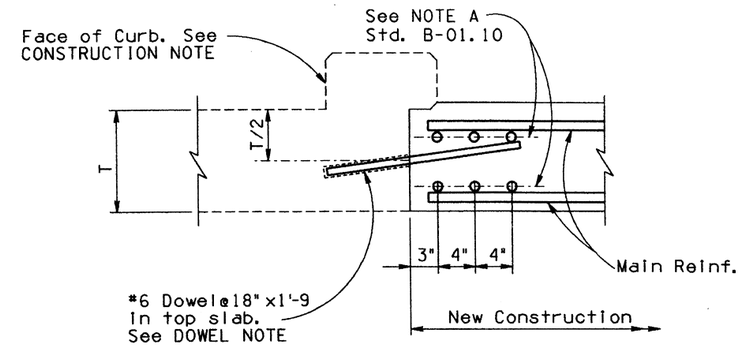

DETAIL 'B'

PLAN

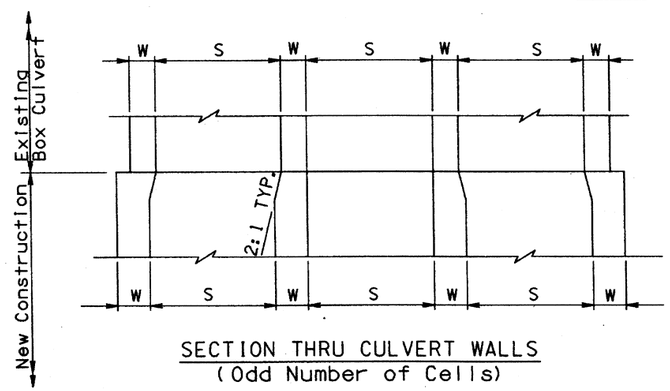

SECTION THRU CULVERT WALLS
(Odd Number of Cells)

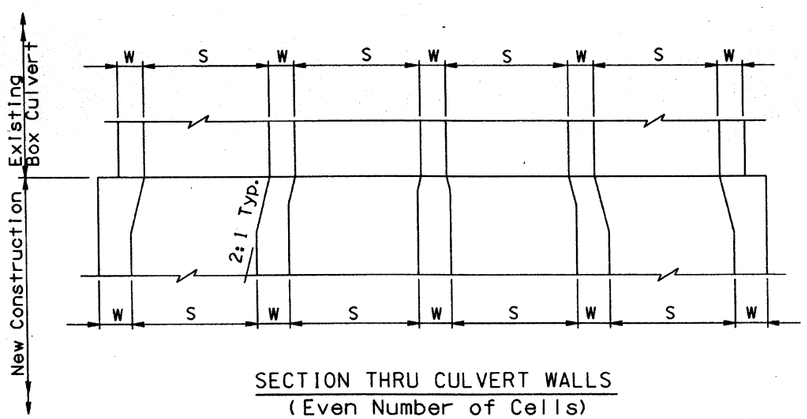

SECTION THRU CULVERT WALLS
(Even Number of Cells)

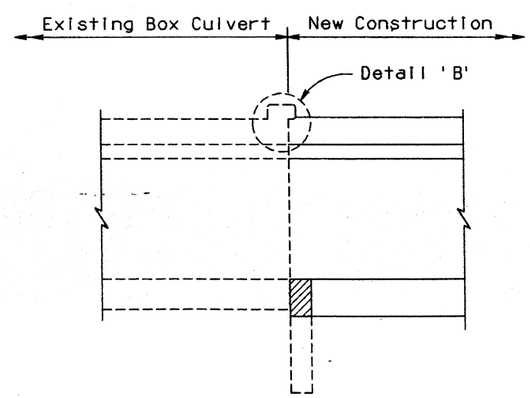

SECTION A-A

NOTE:

For General Notes see Std. B-01.10.

CONSTRUCTION NOTE:

Remove existing headwall as required for new construction.
If concrete headwall is removed to face of curb, no dowels are needed.
Use projecting reinforcing steel for bond in new concrete.
Curb to remain unless within 1'-0 of finish grade.
Wingwalls to be removed a Min. of 1'-6" to provide steel for bond.

DOWEL NOTE:

Drill 1" Φ hole, 8" deep, for #6 dowel. Epoxy dowel in hole with an approved epoxy adhesive. Epoxy anchorage shall develop a tensile pullout strength of 13 kips. Details of the Anchorage System shall be submitted to the Engineer for approval prior to installation.

NOTE:

Indicates payment limits for removal of concrete.

DESIGN					
DRAWN	C. H.	4-92	1		
CHECKED	K. W.	4-92	2		
			3		
			4		

DESCRIPTION OF REVISIONS | MADE BY | DATE

Registered Professional Engineer (Civil) 9910 F. DANIEL DAVIS Arizona U.S.A.	DESIGN APPROVED	ARIZONA DEPARTMENT OF TRANSPORTATION HIGHWAYS DIVISION STANDARD DRAWINGS
	APPROVED FOR DISTRIBUTION	~~BOX~~ CULVERT EXTENSION DETAILS

REVISION

STANDARD NO. B-01.11

ZFL\B51B20\SB01L1.DGN\1
07-MAY-1992 13:36
VIEW NAME:

TABLE NO. I
0'-10' FILL

Span "S"	Height "H"	Slab "T"	Walls "W"	aa Spacing	aa Length	cc ✦ Number	ee Bar Size	ee Spacing	ee Length	gg ✦ Number	hh Bar Size	hh Spacing	hh Length	F
6'	3'	9½"	9"	12"	4'-2	20	5	6"	7'-2	14	4	9"	5'-2	2'-6
	4'	9½"	9"	12"	5'-2	24	5	6"	7'-2	16	4	8"	5'-11	2'-9
	5'	9½"	9"	12"	6'-2	24	5	6"	7'-2	16	4	6"	6'-5	2'-9
	6'	9½"	9"	12"	7'-2	28	6	8"	7'-2	18	4	6"	7'-2	3'-0
	7'	9½"	9"	12"	8'-2	32	6	8"	7'-2	18	4	6"	7'-8	3'-0
8'	3'	10"	11"	12"	4'-3	20	6	9"	9'-6	18	4	6"	6'-2	3'-5
	4'	10"	11"	12"	5'-3	24	6	8"	9'-6	20	4	6"	6'-8	3'-5
	5'	10"	11"	12"	6'-3	24	6	8"	9'-6	20	4	6"	7'-1	3'-4
	6'	10"	11"	12"	7'-3	28	6	8"	9'-6	20	4	6"	7'-7	3'-4
	7'	10"	11"	12"	8'-3	32	6	6"	9'-6	22	4	6"	8'-0	3'-3
	8'	10"	11"	12"	9'-3	32	6	6"	9'-6	22	4	6"	8'-5	3'-2
10'	3'	10"	13"	12"	4'-3	20	6	8"	11'-10	22	5	6"	7'-4	4'-5
	4'	10"	13"	12"	5'-3	24	6	8"	11'-10	22	5	6"	7'-10	4'-5
	5'	10"	13"	12"	6'-3	24	6	7"	11'-10	24	5	7"	8'-3	4'-4
	6'	10"	13"	12"	7'-3	28	6	7"	11'-10	24	5	7"	8'-9	4'-4
	7'	10"	13"	12"	8'-3	32	6	7"	11'-10	26	5	7"	9'-2	4'-3
	8'	10"	13"	12"	9'-3	32	6	7"	11'-10	26	5	7"	9'-8	4'-3
	9'	10"	13"	12"	10'-3	36	6	6"	11'-10	28	5	8"	10'-1	4'-2
	10'	10½"	13"	12"	11'-4	40	6	6"	11'-10	28	5	8"	10'-7	4'-2
12'	8'	11½"	15"	9"	9'-6	32	7	6"	14'-2	38	6	6"	10'-4	4'-8
	9'	11½"	15"	8"	10'-6	36	8	8"	14'-2	38	6	6"	10'-10	4'-8
	10'	11½"	15"	6"	11'-6	40	7	6"	14'-2	40	6	6"	11'-4	4'-8
	11'	12"	15"	8"	12'-7	40	8	8"	14'-2	42	6	6"	11'-6	4'-4
	12'	12"	15"	6"	13'-7	44	8	6"	14'-2	46	6	6"	12'-2	4'-6

TABLE NO. II
10'-15' FILL

Span "S"	Height "H"	Slab "T"	Walls "W"	aa Spacing	aa Length	cc ✦ Number	ee Bar Size	ee Spacing	ee Length	gg ✦ Number	hh Bar Size	hh Spacing	hh Length	F
6'	3'	8"	9"	12"	3'-11	20	5	8"	7'-2	14	4	6"	5'-1	2'-6
	4'	8"	9"	12"	4'-11	24	5	8"	7'-2	14	4	6"	5'-7	2'-6
	5'	8"	9"	12"	5'-11	24	5	6"	7'-2	14	4	6"	6'-1	2'-6
	6'	8"	9"	12"	6'-11	28	6	9"	7'-2	14	4	6"	6'-7	2'-6
	7'	8"	9"	12"	7'-11	32	6	9"	7'-2	14	4	6"	7'-1	2'-6
8'	3'	9"	11"	9"	4'-1	20	5	6"	9'-6	18	5	6"	5'-8	2'-10
	4'	9"	11"	9"	5'-1	24	5	6"	9'-6	18	5	6"	6'-2	2'-10
	5'	9½"	11"	9"	6'-2	24	6	6"	9'-6	18	5	6"	6'-8	2'-10
	6'	9½"	11"	9"	7'-2	28	6	6"	9'-6	18	5	6"	7'-1	2'-9
	7'	9½"	11"	12"	8'-2	32	6	6"	9'-6	18	5	6"	7'-7	2'-9
	8'	9½"	11"	12"	9'-2	32	6	6"	9'-6	18	5	6"	8'-1	2'-9
10'	3'	10½"	13"	8"	4'-4	20	6	6"	11'-10	22	6	6"	6'-9	3'-8
	4'	10½"	13"	8"	5'-4	24	6	6"	11'-10	22	6	6"	7'-2	3'-7
	5'	10½"	13"	9"	6'-4	24	6	6"	11'-10	22	6	6"	7'-7	3'-6
	6'	11"	13"	8"	7'-5	28	7	8"	11'-10	22	6	8"	8'-1	3'-6
	7'	11"	13"	8"	8'-5	32	7	8"	11'-10	22	6	8"	8'-6	3'-5
	8'	11"	13"	10"	9'-5	32	7	7"	11'-10	22	6	7"	9'-0	3'-5
	9'	11½"	13"	11"	10'-6	36	7	7"	11'-10	22	6	7"	9'-6	3'-4
	10'	11½"	13"	11"	11'-6	40	7	6"	11'-10	22	6	9"	10'-0	3'-4
12'	8'	13"	15"	10"	9'-9	32	8	7"	14'-2	26	6	7"	9'-5	3'-8
	9'	13"	15"	10"	10'-9	36	8	7"	14'-2	26	6	7"	9'-11	3'-8
	10'	13"	15"	10"	11'-9	40	8	7"	14'-2	26	6	7"	10'-5	3'-8
	11'	13"	15"	10"	12'-9	40	9	7"	14'-2	26	6	7"	11'-0	3'-9
	12'	13½"	15"	7"	13'-10	44	8	7"	14'-2	26	6	7"	11'-7	3'-9

TABLE NO. III
15'-20' FILL

Span "S"	Height "H"	Slab "T"	Walls "W"	aa Spacing	aa Length	cc ✦ Number	ee Bar Size	ee Spacing	ee Length	gg ✦ Number	hh Bar Size	hh Spacing	hh Length	F
6'	3'	9"	9"	12"	4'-1	20	5	6"	7'-2	14	4	6"	5'-2	2'-6
	4'	9"	9"	12"	5'-1	24	5	6"	7'-2	14	4	6"	5'-8	2'-6
	5'	9"	9"	12"	6'-1	24	6	8"	7'-2	14	4	6"	6'-2	2'-6
	6'	9"	9"	12"	7'-1	28	6	6"	7'-2	14	4	6"	6'-8	2'-6
	7'	9"	9"	12"	8'-1	32	6	6"	7'-2	14	4	6"	7'-2	2'-6
8'	3'	10½"	11"	7"	4'-4	20	6	7"	9'-6	18	5	7"	5'-7	2'-8
	4'	10½"	11"	10"	5'-4	24	6	6"	9'-6	18	5	6"	6'-1	2'-8
	5'	10½"	11"	9"	6'-4	24	6	6"	9'-6	18	5	6"	6'-7	2'-8
	6'	11"	11"	11"	7'-5	28	7	7"	9'-6	18	5	7"	7'-2	2'-8
	7'	11"	11"	11"	8'-5	32	7	8"	9'-6	18	5	8"	7'-8	2'-8
	8'	11"	11"	12"	9'-5	32	7	6"	9'-6	18	5	8"	8'-2	2'-8
10'	3'	12½"	13"	6"	4'-8	20	6	6"	11'-10	22	6	6"	6'-7	3'-4
	4'	12½"	13"	7"	5'-8	24	7	7"	11'-10	22	6	7"	7'-1	3'-4
	5'	12½"	13"	7"	6'-8	24	7	7"	11'-10	22	6	7"	7'-7	3'-4
	6'	12½"	13"	7"	7'-8	28	7	7"	11'-10	22	6	7"	8'-1	3'-4
	7'	12½"	13"	9"	8'-8	32	7	6"	11'-10	22	5	6"	8'-3	3'-2
	8'	13"	13"	9"	9'-9	32	7	6"	11'-10	22	5	6"	8'-10	3'-2
	9'	13"	13"	10"	10'-9	36	8	6"	11'-10	22	5	6"	9'-4	3'-2
	10'	13"	13"	11"	11'-9	40	8	6"	11'-10	22	5	6"	9'-10	3'-2
12'	8'	15"	15"	10"	10'-1	32	8	7"	14'-2	26	6	7"	9'-6	3'-7
	9'	15"	15"	10"	11'-1	36	9	7"	14'-2	26	6	7"	10'-0	3'-7
	10'	15½"	15"	10"	12'-2	40	8	6"	14'-2	26	6	8"	10'-7	3'-7
	11'	15½"	15"	10"	13'-2	40	8	6"	14'-2	26	6	6"	11'-2	3'-8
	12'	15½"	15"	6"	14'-2	44	8	6"	14'-2	26	6	6"	11'-9	3'-9

TABLE NO. IV
20'-25' FILL

Span "S"	Height "H"	Slab "T"	Walls "W"	aa Spacing	aa Length	cc ✦ Number	ee Bar Size	ee Spacing	ee Length	gg ✦ Number	hh Bar Size	hh Spacing	hh Length	F
6'	3'	10"	9"	12"	4'-3	20	6	8"	7'-2	14	4	6"	5'-3	2'-6
	4'	10"	9"	12"	5'-3	24	6	6"	7'-2	14	4	6"	5'-9	2'-6
	5'	10"	9"	12"	6'-3	24	6	6"	7'-2	14	4	6"	6'-3	2'-6
	6'	10"	9"	12"	7'-3	28	7	9"	7'-2	14	4	6"	6'-9	2'-6
	7'	10"	9"	12"	8'-3	32	7	9"	7'-2	14	4	6"	7'-3	2'-6
8'	3'	12"	11"	11"	4'-7	20	7	7"	9'-6	18	5	7"	5'-9	2'-8
	4'	12"	11"	12"	5'-7	24	7	8"	9'-6	18	5	6"	6'-1	2'-8
	5'	12"	11"	12"	6'-7	24	7	6"	9'-6	18	5	8"	6'-7	2'-8
	6'	12"	11"	12"	7'-7	28	7	7"	9'-6	18	5	7"	6'-1	2'-8
	7'	12"	11"	12"	8'-7	32	7	6"	9'-6	18	5	9"	6'-7	2'-8
	8'	12½"	11"	12"	9'-8	32	7	6"	9'-6	18	4	6"	6'-1	2'-8
10'	3'	14"	13"	6"	4'-11	20	8	9"	11'-10	22	6	6"	6'-6	3'-2
	4'	14"	13"	6"	5'-11	24	8	8"	11'-10	22	6	8"	7'-0	3'-2
	5'	14"	13"	7"	6'-11	24	8	7"	11'-10	22	6	7"	7'-6	3'-2
	6'	14½"	13"	7"	8'-0	28	8	7"	11'-10	22	6	7"	8'-1	3'-2
	7'	14½"	13"	8"	9'-0	32	9	8"	11'-10	22	5	6"	8'-5	3'-2
	8'	14½"	13"	8"	10'-0	32	9	8"	11'-10	22	5	6"	8'-11	3'-2
	9'	14½"	13"	9"	11'-0	36	9	9"	11'-10	22	5	6"	9'-5	3'-2
	10'	15"	13"	8"	12'-0	40	9	8"	11'-10	22	5	6"	9'-11	3'-2
12'	8'	17"	15"	10"	10'-5	32	8	6"	14'-2	26	5	6"	9'-6	3'-6
	9'	17½"	15"	9"	11'-6	36	9	6"	14'-2	26	6	9"	10'-3	3'-7
	10'	17½"	15"	10"	12'-6	40	10	9"	14'-2	26	5	6"	10'-7	3'-7
	11'	17½"	15"	7"	13'-6	40	9	7"	14'-2	26	6	7"	11'-5	3'-8
	12'	17½"	15"	7"	14'-6	44	10	7"	14'-2	26	6	7"	12'-0	3'-9

✦Total number of bars in the cross-section.

TABLE NO. V
25'-30' FILL

Span "S"	Height "H"	Slab "T"	Walls "W"	aa Spacing	aa Length	cc ✦ Number	ee Bar size	ee Spacing	ee Length	gg ✦ Number	hh Bar Size	hh Spacing	hh Length	F
6'	3'	10½"	9"	12"	4'-4	20	6	6"	7'-2	14	4	6"	5'-3	2'-6
	4'	11"	9"	12"	5'-5	24	6	6"	7'-2	14	4	6"	5'-10	2'-6
	5'	11"	9"	12"	6'-5	24	6	6"	7'-2	14	4	6"	6'-4	2'-6
	6'	11"	9"	12"	7'-5	28	7	8"	7'-2	14	4	6"	6'-10	2'-6
	7'	11"	9"	12"	8'-5	32	7	8"	7'-2	14	4	6"	7'-4	2'-6
8'	3'	13"	11"	7"	4'-9	20	7	7"	9'-6	18	5	7"	5'-10	2'-8
	4'	13"	11"	10"	5'-9	24	7	6"	9'-6	18	5	6"	6'-4	2'-8
	5'	13½"	11"	10"	6'-10	24	8	8"	9'-6	18	5	8"	6'-10	2'-8
	6'	13½"	11"	11"	7'-10	28	8	8"	9'-6	18	5	8"	7'-4	2'-8
	7'	13½"	11"	11"	8'-10	32	8	6"	9'-6	18	4	6"	7'-10	2'-8
	8'	13½"	11"	12"	9'-10	32	8	8"	9'-6	18	4	6"	8'-4	2'-8
10'	3'	16"	13"	6"	5'-3	20	7	6"	11'-10	22	6	8"	7'-0	3'-5
	4'	16"	13"	7"	6'-3	24	8	7"	11'-10	22	6	7"	7'-6	3'-5
	5'	16"	13"	8"	7'-3	24	8	8"	11'-10	22	6	8"	8'-0	3'-4
	6'	16"	13"	8"	8'-3	28	8	8"	11'-10	22	6	8"	8'-4	3'-4
	7'	16"	13"	8"	9'-3	32	8	8"	11'-10	22	5	6"	8'-8	3'-3
	8'	16"	13"	9"	10'-3	32	8	6"	11'-10	22	5	6"	9'-2	3'-3
	9'	16"	13"	9"	11'-3	36	8	6"	11'-10	22	5	6"	9'-7	3'-2
	10'	16½"	13"	12"	12'-4	40	8	6"	11'-10	22	5	6"	10'-1	3'-2
12'	8'	19½"	15"	8"	10'-10	32	10	8"	14'-2	26	5	6"	9'-8	3'-6
	9'	19½"	15"	10"	11'-10	36	10	7"	14'-2	26	5	7"	10'-2	3'-6
	10'	19½"	15"	10"	12'-10	40	9	6"	14'-2	26	5	6"	10'-8	3'-7
	11'	19½"	15"	8"	13'-10	40	10	8"	14'-2	26	6	8"	11'-6	3'-8
	12'	20"	15"	10"	14'-11	44	9	6"	14'-2	26	6	6"	12'-0	3'-9

QUANTITIES PER LINEAR FOOT OF BARREL

Span "S"	Height "H"	Table I Concrete C.Y.	Table I Reinf. Steel Lbs.	Table II Concrete C.Y.	Table II Reinf. Steel Lbs.	Table III Concrete C.Y.	Table III Reinf. Steel Lbs.	Table IV Concrete C.Y.	Table IV Reinf. Steel Lbs.	Table V Concrete C.Y.	Table V Reinf. Steel Lbs.
6'	3'	0.635	90.0	0.563	95.7	0.611	104.2	0.659	107.7	0.684	118.6
	4'	0.691	104.4	0.618	104.7	0.667	113.2	0.715	127.4	0.763	128.4
	5'	0.746	123.0	0.674	118.4	0.722	121.8	0.771	133.6	0.819	134.7
	6'	0.802	137.8	0.729	126.1	0.778	141.5	0.826	138.6	0.874	144.5
	7'	0.858	146.7	0.785	135.1	0.833	150.4	0.882	147.5	0.930	153.4
8'	3'	0.841	123.8	0.778	123.7	0.872	129.7	0.966	143.5	1.029	150.7
	4'	0.908	138.8	0.846	133.3	0.940	149.2	1.034	150.1	1.097	173.0
	5'	0.976	144.3	0.945	157.9	1.008	157.7	1.102	160.7	1.196	164.0
	6'	1.044	153.3	1.013	166.8	1.107	165.4	1.170	163.8	1.264	170.5
	7'	1.112	177.1	1.081	170.8	1.175	158.8	1.238	171.2	1.332	220.3
	8'	1.180	182.7	1.149	177.0	1.243	181.8	1.337	198.7	1.400	199.5
10'	3'	1.022	151.4	1.060	193.8	1.215	197.7	1.330	210.9	1.485	209.8
	4'	1.102	160.4	1.140	204.6	1.295	206.9	1.410	213.3	1.565	238.6
	5'	1.182	165.0	1.221	210.6	1.375	215.6	1.491	241.0	1.645	220.3
	6'	1.262	173.4	1.340	202.0	1.455	227.0	1.610	253.6	1.725	229.1
	7'	1.343	182.5	1.420	211.6	1.535	225.8	1.690	255.2	1.806	232.1
	8'	1.423	188.1	1.500	235.3	1.654	233.6	1.770	262.5	1.886	267.4
	9'	1.503	198.3	1.619	243.4	1.735	269.9	1.850	255.2	1.966	276.4
	10'	1.622	206.4	1.699	244.4	1.815	276.6	1.969	282.4	2.085	277.7
12'	8'	1.803	313.2	1.940	289.8	2.123	291.5	2.307	295.4	2.535	336.2
	9'	1.896	325.9	2.033	300.2	2.216	337.3	2.445	348.2	2.628	352.8
	10'	1.988	353.4	2.126	310.5	2.354	321.2	2.538	326.2	2.721	357.9
	11'	2.127	345.8	2.218	354.4	2.447	362.5	2.630	375.1	2.813	373.9
	12'	2.219	414.3	2.356	345.2	2.540	398.4	2.723	431.2	2.952	421.0

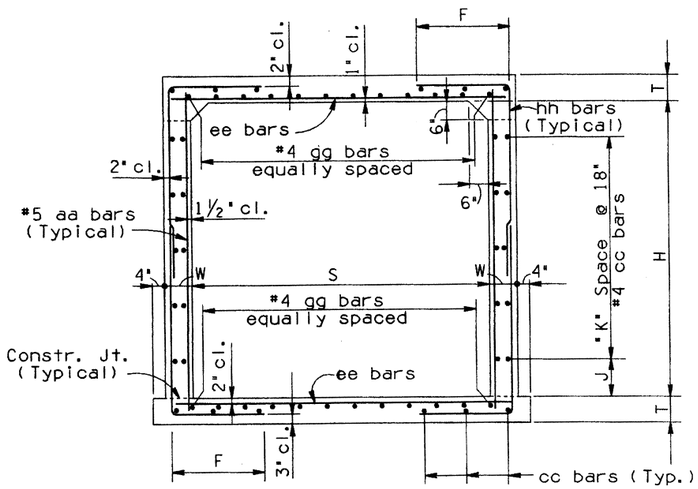

TYPICAL SECTION

Height "H"	"J" Dim.	"K" Spaces
3'	9"	1
4'	3"	2
5'	12"	2
6'	9"	3
7'	3"	4
8'	12"	4
9'	9"	5
10'	3"	6
11'	12"	6
12'	9"	7

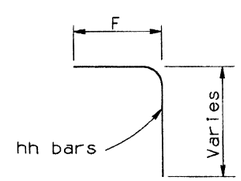

BENDS

NOTE: See B-01.10 for General Notes and Miscellaneous Details.

Registered Professional Engineer (Civil) CERTIFICATE NO. 9910 F. DANIEL DAVIS Expires 6-30-88 ARIZONA U.S.A.	DESIGN APPROVED F.D. Davis	ARIZONA DEPARTMENT OF TRANSPORTATION HIGHWAYS DIVISION STANDARD DRAWINGS	REVISION 7-88
	APPROVED FOR DISTRIBUTION T.A. Bryant, II.	SINGLE BARREL BOX CULVERT	STANDARD NO. B-02.10

NO	DESCRIPTION OF REVISIONS	DATE	MADE BY
1	Total Redesign of Box	6-88	C.H.
2			
3			
4			

DESIGN
DRAWN
CHECKED

CADD FILENAME= ZFA hh
VIEW NAME= gg

TABLE I
0'-10' FILL

Span "S"	Height "H"	Top Slab "T"	Walls "W"	aa Bar Size	aa Spacing	aa Length	bb Bar Size	bb Spacing	bb Length	cc ✦ Number	dd Bar Size	dd Spacing	dd Length	dd A	dd B	dd C	ee Bar Size	ee Spacing	ee Length	ff Bar Size	ff Spacing	ff Length	gg ✦ Number	gg D	hh Bar Size	hh Spacing	hh Length	hh F
6'	3'	9½"	8"	5	12"	4'-4	5	12"	8'-9	48	5	14"	13'-2	4'-7	2'-7	6½"	5	14"	13'-7	5	14"	13'-7	20	3'-0	4	7"	5'-1	2'-5
	4'	9½"	8"	5	12"	5'-4	5	12"	10'-9	54	5	14"	13'-2	4'-7	2'-7	6½"	5	14"	13'-7	5	14"	13'-7	20	3'-0	4	7"	5'-7	2'-5
	5'	9½"	8"	5	12"	6'-4	5	12"	12'-9	54	5	14"	13'-2	4'-7	2'-7	6½"	5	14"	13'-7	5	14"	13'-7	20	3'-0	4	7"	6'-1	2'-5
	6'	9½"	8"	5	12"	7'-4	5	12"	14'-9	60	5	14"	13'-2	4'-7	2'-7	6½"	5	14"	13'-7	5	14"	13'-7	20	3'-0	4	7"	6'-7	2'-5
	7'	9½"	8"	5	12"	8'-4	5	12"	16'-9	66	5	13"	13'-2	4'-7	2'-7	6½"	5	13"	13'-7	5	13"	13'-7	20	3'-0	4	6½"	7'-1	2'-5
8'	3'	9½"	9"	5	12"	4'-4	5	12"	8'-9	48	6	14"	17'-2	6'-1	3'-8	6½"	6	14"	17'-10	6	14"	17'-10	28	4'-0	6	7"	5'-6	2'-6
	4'	9½"	9"	5	12"	5'-4	5	12"	10'-9	54	6	14"	17'-2	6'-1	3'-8	6½"	6	14"	17'-10	6	14"	17'-10	28	4'-0	6	7"	6'-0	2'-6
	5'	9½"	9"	5	12"	6'-4	5	12"	12'-9	54	6	14"	17'-2	6'-1	3'-8	6½"	6	14"	17'-10	6	14"	17'-10	28	4'-0	6	7"	6'-6	2'-6
	6'	9½"	9"	5	12"	7'-4	5	12"	14'-9	60	6	14"	17'-2	6'-1	3'-8	6½"	6	14"	17'-10	6	14"	17'-10	28	4'-0	6	7"	7'-0	2'-6
	7'	9½"	9"	5	12"	8'-4	5	12"	16'-9	66	6	13"	17'-2	6'-1	3'-8	6½"	6	13"	17'-10	6	13"	17'-10	28	4'-0	5	6½"	7'-5	2'-6
	8'	9½"	9"	5	12"	9'-4	5	12"	18'-9	66	6	13"	17'-2	6'-1	3'-8	6½"	6	13"	17'-10	6	13"	17'-10	28	4'-0	6	6½"	8'-0	2'-6
10'	3'	10½"	11"	5	12"	4'-6	5	12"	9'-2	48	7	17"	21'-5	7'-7	4'-8	7½"	6	17"	22'-4	7	17"	22'-4	32	5'-0	6	8½"	6'-0	3'-0
	4'	10½"	11"	5	12"	5'-6	5	12"	11'-2	54	7	17"	21'-5	7'-7	4'-8	7½"	6	17"	22'-4	7	17"	22'-4	32	5'-0	6	8½"	6'-7	3'-0
	5'	10½"	11"	5	12"	6'-6	5	12"	13'-2	54	6	12"	21'-5	7'-7	4'-8	7½"	5	12"	22'-4	6	12"	22'-4	32	5'-0	5	6"	6'-8	2'-8
	6'	10½"	11"	5	12"	7'-6	5	12"	15'-2	60	6	12"	21'-5	7'-7	4'-8	7½"	5	12"	22'-4	6	12"	22'-4	32	5'-0	5	6"	7'-2	2'-8
	7'	10½"	11"	5	12"	8'-6	5	12"	17'-2	66	7	15"	21'-5	7'-7	4'-8	7½"	5	15"	22'-4	7	15"	22'-4	32	5'-0	6	7½"	7'-9	2'-8
	8'	10½"	11"	5	12"	9'-6	5	12"	19'-2	66	7	15"	21'-5	7'-7	4'-8	7½"	5	15"	22'-4	7	15"	22'-4	32	5'-0	6	7½"	8'-3	2'-8
	9'	10½"	11"	5	12"	10'-6	5	12"	21'-2	72	7	15"	21'-5	7'-7	4'-8	7½"	6	15"	22'-4	7	15"	22'-4	32	5'-0	6	7½"	8'-9	2'-8
	10'	10½"	11"	5	12"	11'-6	5	12"	23'-2	78	7	14"	21'-5	7'-7	4'-8	7½"	5	14"	22'-4	7	14"	22'-4	32	5'-0	6	7"	9'-3	2'-8
12'	8'	12½"	13"	5	12"	9'-10	5	12"	20'-0	66	7	13"	25'-8	9'-1	5'-6	9½"	5	13"	26'-10	7	13"	26'-10	40	6'-0	6	6½"	8'-6	2'-10
	9'	12½"	13"	5	12"	10'-10	5	12"	22'-0	72	8	16"	25'-8	9'-1	5'-6	9½"	5	16"	26'-10	8	16"	26'-10	40	6'-0	6	8"	9'-0	2'-10
	10'	12½"	13"	5	12"	11'-10	5	12"	24'-0	78	8	16"	25'-8	9'-1	5'-6	9½"	5	16"	26'-10	8	16"	26'-10	40	6'-0	6	8"	9'-6	2'-10
	11'	12½"	13"	5	12"	12'-10	5	12"	26'-0	78	7	12"	25'-8	9'-1	5'-6	9½"	4	12"	26'-10	7	12"	26'-10	40	6'-0	6	6"	10'-0	2'-10
	12'	12½"	13"	5	12"	13'-10	5	12"	28'-0	84	7	12"	25'-8	9'-1	5'-6	9½"	5	12"	26'-10	7	12"	26'-10	40	6'-0	6	6"	10'-6	2'-10

TABLE NO. II
10'-15' FILL

Span "S"	Height "H"	Top Slab "T"	Walls "W"	aa Bar Size	aa Spacing	aa Length	bb Bar Size	bb Spacing	bb Length	cc ✦ Number	dd Bar Size	dd Spacing	dd Length	dd A	dd B	dd C	ee Bar Size	ee Spacing	ee Length	ff Bar Size	ff Spacing	ff Length	gg ✦ Number	gg D	hh Bar Size	hh Spacing	hh Length	hh F
6'	3'	8"	8"	5	12"	4'-1	5	12"	8'-3	48	5	14"	13'-0	4'-7	2'-10	5"	5	14"	13'-7	5	14"	13'-7	16	3'-0	4	7"	5'-0	2'-5
	4'	8"	8"	5	12"	5'-1	5	12"	10'-3	54	5	14"	13'-0	4'-7	2'-10	5"	5	14"	13'-7	5	14"	13'-7	16	3'-0	4	7"	5'-6	2'-5
	5'	8"	8"	5	12"	6'-1	5	12"	12'-3	54	5	14"	13'-0	4'-7	2'-10	5"	5	14"	13'-7	5	14"	13'-7	16	3'-0	4	7"	6'-0	2'-5
	6'	8"	8"	5	12"	7'-1	5	12"	14'-3	60	5	14"	13'-0	4'-7	2'-10	5"	5	14"	13'-7	5	14"	13'-7	16	3'-0	4	7"	6'-6	2'-5
	7'	8"	8"	5	12"	8'-1	5	12"	16'-3	66	5	14"	13'-0	4'-7	2'-10	5"	5	14"	13'-7	5	14"	13'-7	16	3'-0	4	7"	7'-0	2'-5
8'	3'	10½"	9"	5	12"	4'-6	5	12"	9'-2	48	6	13"	17'-3	6'-1	3'-6	7½"	5	13"	17'-10	6	13"	17'-10	20	4'-0	4	6½"	5'-3	2'-6
	4'	10½"	9"	5	12"	5'-6	5	12"	11'-2	54	6	13"	17'-3	6'-1	3'-6	7½"	4	13"	17'-10	6	13"	17'-10	20	4'-0	4	6½"	5'-9	2'-6
	5'	10½"	9"	5	12"	6'-6	5	12"	13'-2	54	6	13"	17'-3	6'-1	3'-6	7½"	4	13"	17'-10	6	13"	17'-10	20	4'-0	4	6½"	6'-3	2'-6
	6'	10½"	9"	5	12"	7'-6	5	12"	15'-2	60	6	13"	17'-3	6'-1	3'-6	7½"	4	13"	17'-10	6	13"	17'-10	20	4'-0	4	6½"	6'-9	2'-6
	7'	10½"	9"	5	12"	8'-6	5	12"	17'-2	66	6	13"	17'-3	6'-1	3'-6	7½"	4	13"	17'-10	6	13"	17'-10	20	4'-0	4	6½"	7'-3	2'-6
	8'	10½"	9"	5	12"	9'-6	5	12"	19'-2	66	6	12"	17'-3	6'-1	3'-6	7½"	4	12"	17'-10	6	12"	17'-10	20	4'-0	4	6"	7'-9	2'-6
10'	3'	12½"	11"	5	12"	4'-10	5	12"	9'-10	48	7	14"	21'-6	7'-7	4'-4	9½"	4	14"	22'-4	7	14"	22'-4	24	5'-0	5	7"	5'-10	2'-8
	4'	12½"	11"	5	12"	5'-10	5	12"	11'-10	54	7	13"	21'-6	7'-7	4'-4	9½"	4	13"	22'-4	7	13"	22'-4	24	5'-0	4	6½"	6'-4	2'-8
	5'	12½"	11"	5	12"	6'-10	5	12"	13'-10	54	7	14"	21'-6	7'-7	4'-4	9½"	4	14"	22'-4	7	14"	22'-4	24	5'-0	5	7"	6'-10	2'-8
	6'	12½"	11"	5	12"	7'-10	5	12"	15'-10	60	7	13"	21'-6	7'-7	4'-4	9½"	4	13"	22'-4	7	13"	22'-4	24	5'-0	5	6½"	7'-4	2'-8
	7'	12½"	11"	5	12"	8'-10	5	12"	17'-10	66	7	13"	21'-6	7'-7	4'-4	9½"	4	13"	22'-4	7	13"	22'-4	24	5'-0	5	6½"	7'-10	2'-8
	8'	12½"	11"	5	12"	9'-10	5	12"	19'-10	66	7	13"	21'-6	7'-7	4'-4	9½"	4	13"	22'-4	7	13"	22'-4	24	5'-0	5	6½"	8'-4	2'-8
	9'	12½"	11"	5	12"	10'-10	5	12"	21'-10	72	7	13"	21'-6	7'-7	4'-4	9½"	4	13"	22'-4	7	13"	22'-4	24	5'-0	5	6½"	8'-10	2'-8
	10'	12½"	11"	5	12"	11'-10	5	12"	23'-10	78	7	13"	21'-6	7'-7	4'-4	9½"	4	13"	22'-4	7	13"	22'-4	24	5'-0	5	6½"	9'-4	2'-8
12'	8'	15"	13"	5	12"	10'-3	5	12"	20'-9	66	8	15"	25'-10	9'-1	5'-1	12"	4	15"	26'-10	8	15"	26'-10	28	6'-0	6	7½"	8'-9	2'-11
	9'	15"	13"	5	12"	11'-3	5	12"	22'-9	72	8	15"	25'-10	9'-1	5'-1	12"	4	15"	26'-10	8	15"	26'-10	28	6'-0	6	7½"	9'-3	2'-11
	10'	15"	13"	5	12"	12'-3	5	12"	24'-9	78	8	15"	25'-10	9'-1	5'-1	12"	5	15"	26'-10	8	15"	26'-10	28	6'-0	6	7½"	9'-9	2'-11
	11'	15"	13"	5	12"	13'-3	5	12"	26'-9	78	8	14"	25'-10	9'-1	5'-1	12"	4	14"	26'-10	8	14"	26'-10	28	6'-0	5	7"	10'-9	3'-5
	12'	15"	13"	5	12"	14'-3	5	12"	28'-9	84	8	14"	25'-10	9'-1	5'-1	12"	5	14"	26'-10	8	14"	26'-10	28	6'-0	6	7"	11'-3	3'-5

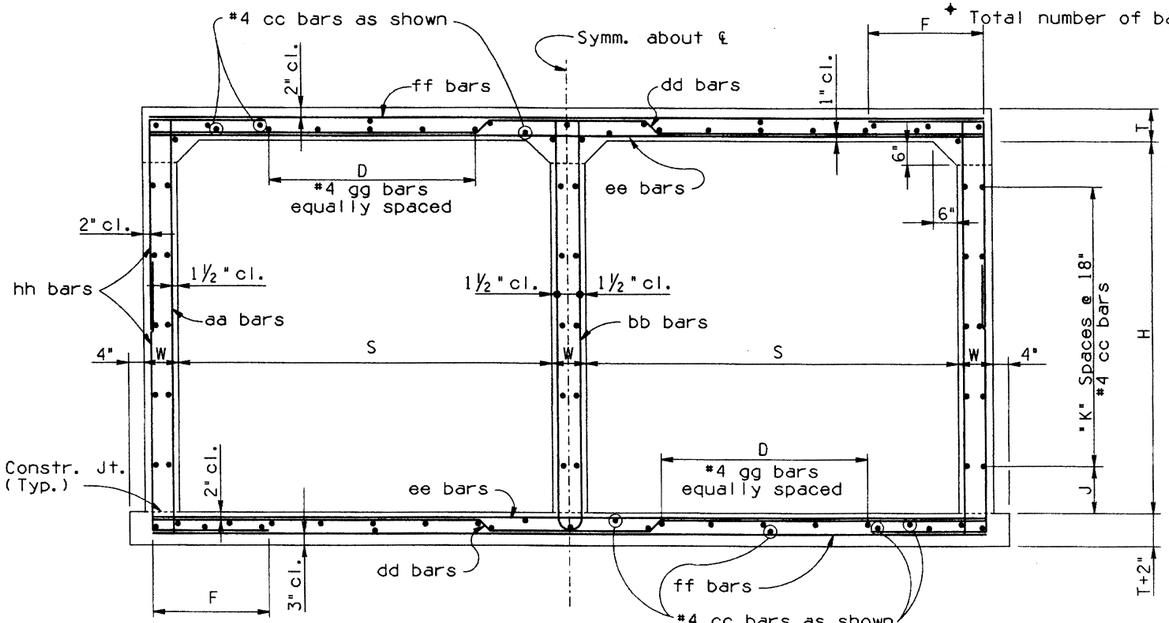

TYPICAL SECTION

NOTE:

Reinforcing shown is for placement location only.
Use the appropiate table to determine the reinforcing requirements.

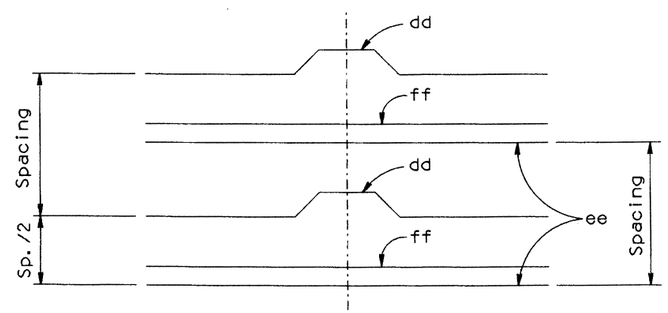

REINFORCING BAR PLACING DIAGRAM

Height "H"	"J" Dim.	"K" Spaces
3'	9"	1
4'	3"	2
5'	12"	2
6'	9"	3
7'	3"	4
8'	12"	4
9'	9"	5
10'	3"	6
11'	12"	6
12'	9"	7

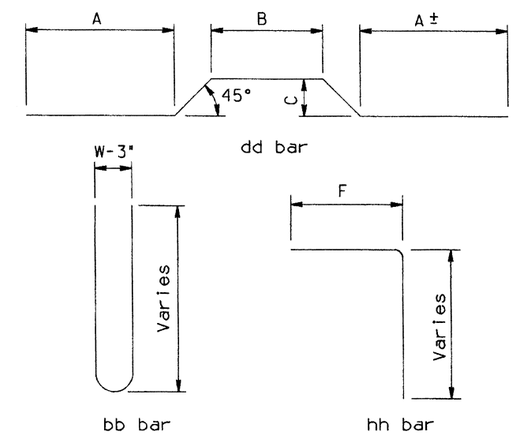

BENDS

NOTE:

See B-02.25 for Tables III thru V.
See B-01.10 for General Notes and Miscellaneous Details.
See B-02.70 for Quantities.

DESIGN		NO	DESCRIPTION OF REVISIONS	MADE BY	DATE
		1	Total Redesign of Box	J.M.	6-88
		2	Changed dd bar bend	J.M.	4-92
		3			
		4			
DESIGN					
DRAWN					
CHECKED					

CADD FILENAME= ZFA
VIEW NAME=

DESIGN APPROVED

APPROVED FOR DISTRIBUTION

ARIZONA
DEPARTMENT OF TRANSPORTATION
HIGHWAYS DIVISION
STANDARD DRAWINGS

DOUBLE BARREL
BOX CULVERT

REVISION 4-92

STANDARD NO. B-02.20

TABLE NO. III
15'-20' FILL

Span "S"	Height "H"	Top Slab "T"	Walls "W"	aa Bar Size	aa Spacing	aa Length	bb Bar Size	bb Spacing	bb Length	cc Number ✦	dd Bar Size	dd Spacing	dd Length	dd A	dd B	dd C	ee Bar Size	ee Spacing	ee Length	ff Bar Size	ff Spacing	ff Length	gg Number ✦	gg D	hh Bar Size	hh Spacing	hh Length	hh F
6'	3'	9½"	8"	5	12"	4'-4	5	12"	8'-9	48	5	13"	13'-2	4'-7	2'-7	6½"	5	13"	13'-7	5	13"	13'-7	16	3'-0	4	6½"	5'-1	2'-5
	4'	9½"	8"	5	12"	5'-4	5	12"	10'-9	54	5	13"	13'-2	4'-7	2'-7	6½"	5	13"	13'-7	5	13"	13'-7	16	3'-0	4	6½"	5'-7	2'-5
	5'	9½"	8"	5	12"	6'-4	5	12"	12'-9	54	5	13"	13'-2	4'-7	2'-7	6½"	5	13"	13'-7	5	13"	13'-7	16	3'-0	4	6½"	6'-1	2'-5
	6'	9½"	8"	5	12"	7'-4	5	12"	14'-9	60	5	13"	13'-2	4'-7	2'-7	6½"	5	13"	13'-7	5	13"	13'-7	16	3'-0	4	6½"	6'-7	2'-5
	7'	9½"	8"	5	12"	8'-4	5	12"	16'-9	66	5	13"	13'-2	4'-7	2'-7	6½"	5	13"	13'-7	5	13"	13'-7	16	3'-0	4	6½"	7'-1	2'-5
8'	3'	12"	9"	5	12"	4'-9	5	12"	9'-8	48	6	12"	17'-4	6'-1	3'-3	9"	4	12"	17'-10	6	12"	17'-10	20	4'-0	4	6"	5'-5	2'-6
	4'	12"	9"	5	12"	5'-9	5	12"	11'-8	54	6	12"	17'-4	6'-1	3'-3	9"	4	12"	17'-10	6	12"	17'-10	20	4'-0	4	6"	5'-11	2'-6
	5'	12"	9"	5	12"	6'-9	5	12"	13'-8	54	6	12"	17'-4	6'-1	3'-3	9"	4	12"	17'-10	6	12"	17'-10	20	4'-0	4	6"	6'-5	2'-6
	6'	12"	9"	5	12"	7'-9	5	12"	15'-8	60	6	12"	17'-4	6'-1	3'-3	9"	4	12"	17'-10	6	12"	17'-10	20	4'-0	4	6"	6'-11	2'-6
	7'	12"	9"	5	12"	8'-9	5	12"	17'-8	66	6	12"	17'-4	6'-1	3'-3	9"	4	12"	17'-10	6	12"	17'-10	20	4'-0	4	6"	7'-5	2'-6
	8'	12"	9"	5	12"	9'-9	5	12"	19'-8	66	6	12"	17'-4	6'-1	3'-3	9"	4	12"	17'-10	6	12"	17'-10	20	4'-0	4	6"	7'-11	2'-6
10'	3'	15"	11"	5	12"	5'-3	5	12"	10'-8	48	7	13"	21'-9	7'-7	3'-11	1'-0	4	13"	22'-4	7	13"	22'-4	24	5'-0	5	6½"	6'-0	2'-8
	4'	15"	11"	5	12"	6'-3	5	12"	12'-8	54	7	13"	21'-9	7'-7	3'-11	1'-0	4	13"	22'-4	7	13"	22'-4	24	5'-0	5	6½"	6'-6	2'-8
	5'	15"	11"	5	12"	7'-3	5	12"	14'-8	54	7	13"	21'-9	7'-7	3'-11	1'-0	4	13"	22'-4	7	13"	22'-4	24	5'-0	5	6½"	7'-0	2'-8
	6'	15"	11"	5	12"	8'-3	5	12"	16'-8	60	7	13"	21'-9	7'-7	3'-11	1'-0	4	13"	22'-4	7	13"	22'-4	24	5'-0	5	6½"	7'-6	2'-8
	7'	15"	11"	5	12"	9'-3	5	12"	18'-8	66	7	13"	21'-9	7'-7	3'-11	1'-0	4	13"	22'-4	7	13"	22'-4	24	5'-0	5	6½"	8'-0	2'-8
	8'	15"	11"	5	12"	10'-3	5	12"	20'-8	66	7	13"	21'-9	7'-7	3'-11	1'-0	4	13"	22'-4	7	13"	22'-4	24	5'-0	5	6½"	8'-6	2'-8
	9'	15"	11"	5	12"	11'-3	5	12"	22'-8	72	7	13"	21'-9	7'-7	3'-11	1'-0	4	13"	22'-4	7	13"	22'-4	24	5'-0	5	6½"	9'-0	2'-8
	10'	15"	11"	5	12"	12'-3	5	12"	24'-8	78	7	13"	21'-9	7'-7	3'-11	1'-0	4	13"	22'-4	7	13"	22'-4	24	5'-0	5	6½"	9'-6	2'-9
12'	8'	18"	13"	5	12"	10'-9	5	12"	21'-6	66	8	14"	26'-1	9'-1	4'-7	1'-3	4	14"	26'-10	8	14"	26'-10	28	6'-0	5	7"	9'-6	3'-5
	9'	18"	13"	5	12"	11'-9	5	12"	23'-6	72	8	14"	26'-1	9'-1	4'-7	1'-3	4	14"	26'-10	8	14"	26'-10	28	6'-0	5	7"	10'-0	3'-5
	10'	18"	13"	5	12"	12'-9	5	12"	25'-6	78	8	14"	26'-1	9'-1	4'-7	1'-3	4	14"	26'-10	8	14"	26'-10	28	6'-0	6	7"	10'-7	3'-5
	11'	18"	13"	5	12"	13'-9	5	12"	27'-6	78	8	14"	26'-1	9'-1	4'-7	1'-3	5	14"	26'-10	8	14"	26'-10	28	6'-0	6	7"	11'-1	3'-5
	12'	18"	13"	5	12"	14'-9	5	12"	29'-6	84	8	14"	26'-1	9'-1	4'-7	1'-3	5	14"	26'-10	8	14"	26'-10	28	6'-0	6	7"	11'-7	3'-5

TABLE NO. IV
20'-25' FILL

Span "S"	Height "H"	Top Slab "T"	Walls "W"	aa Bar Size	aa Spacing	aa Length	bb Bar Size	bb Spacing	bb Length	cc Number ✦	dd Bar Size	dd Spacing	dd Length	dd A	dd B	dd C	ee Bar Size	ee Spacing	ee Length	ff Bar Size	ff Spacing	ff Length	gg Number ✦	gg D	hh Bar Size	hh Spacing	hh Length	hh F
6'	3'	11"	8"	5	12"	4'-7	5	12"	9'-2	48	5	12"	13'-3	4'-7	2'-4	8"	5	12"	13'-7	5	12"	13'-7	16	3'-0	4	6"	5'-3	2'-5
	4'	11"	8"	5	12"	5'-7	5	12"	11'-2	54	5	12"	13'-3	4'-7	2'-4	8"	5	12"	13'-7	5	12"	13'-7	16	3'-0	4	6"	5'-9	2'-5
	5'	11"	8"	5	12"	6'-7	5	12"	13'-2	54	5	12"	13'-3	4'-7	2'-4	8"	5	12"	13'-7	5	12"	13'-7	16	3'-0	4	6"	6'-3	2'-5
	6'	11"	8"	5	12"	7'-7	5	12"	15'-2	60	5	12"	13'-3	4'-7	2'-4	8"	5	12"	13'-7	5	12"	13'-7	16	3'-0	4	6"	6'-9	2'-5
	7'	11"	8"	5	12"	8'-7	5	12"	17'-2	66	5	12"	13'-3	4'-7	2'-4	8"	5	12"	13'-7	5	12"	13'-7	16	3'-0	4	6"	7'-3	2'-5
8'	3'	14"	9"	5	12"	5'-1	5	12"	10'-2	48	6	12"	17'-6	6'-1	2'-11	11"	4	12"	17'-10	6	12"	17'-10	20	4'-0	4	6"	5'-7	2'-6
	4'	14"	9"	5	12"	6'-1	5	12"	12'-2	54	6	12"	17'-6	6'-1	2'-11	11"	4	12"	17'-10	6	12"	17'-10	20	4'-0	4	6"	6'-1	2'-6
	5'	14"	9"	5	12"	7'-1	5	12"	14'-2	54	6	12"	17'-6	6'-1	2'-11	11"	4	12"	17'-10	6	12"	17'-10	20	4'-0	4	6"	6'-7	2'-6
	6'	14"	9"	5	12"	8'-1	5	12"	16'-2	60	6	12"	17'-6	6'-1	2'-11	11"	4	12"	17'-10	6	12"	17'-10	20	4'-0	4	6"	7'-1	2'-6
	7'	14"	9"	5	12"	9'-1	5	12"	18'-2	66	6	12"	17'-6	6'-1	2'-11	11"	4	12"	17'-10	6	12"	17'-10	20	4'-0	4	6"	7'-7	2'-6
	8'	14"	9"	5	12"	10'-1	5	12"	20'-2	66	6	12"	17'-6	6'-1	2'-11	11"	4	12"	17'-10	6	12"	17'-10	20	4'-0	4	6"	8'-1	2'-6
10'	3'	17"	11"	5	12"	5'-7	5	12"	11'-2	48	7	13"	21'-10	7'-7	3'-7	1'-2	4	13"	22'-4	7	13"	22'-4	24	5'-0	5	6½"	6'-3	2'-9
	4'	17"	11"	5	12"	6'-7	5	12"	13'-2	54	7	13"	21'-10	7'-7	3'-7	1'-2	4	13"	22'-4	7	13"	22'-4	24	5'-0	5	6½"	6'-9	2'-9
	5'	17"	11"	5	12"	7'-7	5	12"	15'-2	54	7	13"	21'-10	7'-7	3'-7	1'-2	4	13"	22'-4	7	13"	22'-4	24	5'-0	5	6½"	7'-3	2'-9
	6'	17"	11"	5	12"	8'-7	5	12"	17'-2	60	7	13"	21'-10	7'-7	3'-7	1'-2	4	13"	22'-4	7	13"	22'-4	24	5'-0	5	6½"	7'-9	2'-9
	7'	17"	11"	5	12"	9'-7	5	12"	19'-2	66	7	13"	21'-10	7'-7	3'-7	1'-2	4	13"	22'-4	7	13"	22'-4	24	5'-0	5	6½"	8'-3	2'-9
	8'	17"	11"	5	12"	10'-7	5	12"	21'-2	66	7	13"	21'-10	7'-7	3'-7	1'-2	4	13"	22'-4	7	13"	22'-4	24	5'-0	5	6½"	8'-9	2'-9
	9'	17"	11"	5	12"	11'-7	5	12"	23'-2	72	7	13"	21'-10	7'-7	3'-7	1'-2	4	13"	22'-4	7	13"	22'-4	24	5'-0	5	6½"	9'-3	2'-9
	10'	17"	11"	5	12"	12'-7	5	12"	25'-2	78	7	13"	21'-10	7'-7	3'-7	1'-2	4	13"	22'-4	7	13"	22'-4	24	5'-0	5	6½"	9'-9	2'-9
12'	8'	20½"	13"	5	12"	11'-2	5	12"	22'-6	66	8	14"	26'-3	9'-1	4'-2	1'-5½	5	14"	26'-10	8	14"	26'-10	28	6'-0	6	7"	9'-3	2'-11
	9'	20½"	13"	5	12"	12'-2	5	12"	24'-6	72	8	14"	26'-3	9'-1	4'-2	1'-5½	5	14"	26'-10	8	14"	26'-10	28	6'-0	6	7"	9'-9	2'-11
	10'	20½"	13"	5	12"	13'-2	5	12"	26'-6	78	8	14"	26'-3	9'-1	4'-2	1'-5½	5	14"	26'-10	8	14"	26'-10	28	6'-0	6	7"	10'-3	2'-11
	11'	20½"	13"	5	12"	14'-2	5	12"	28'-6	78	8	14"	26'-3	9'-1	4'-2	1'-5½	5	14"	26'-10	8	14"	26'-10	28	6'-0	6	7"	11'-3	3'-5
	12'	20½"	13"	5	12"	15'-2	5	12"	30'-6	84	8	13"	26'-3	9'-1	4'-2	1'-5½	5	13"	26'-10	8	13"	26'-10	28	6'-0	5	6½"	11'-9	3'-5

✦ Total number of bars in the cross-section.

TABLE NO. V
25'-30' FILL

Span "S"	Height "H"	Top Slab "T"	Walls "W"	aa Bar Size	aa Spacing	aa Length	bb Bar Size	bb Spacing	bb Length	cc Number ✦	dd Bar Size	dd Spacing	dd Length	dd A	dd B	dd C	ee Bar Size	ee Spacing	ee Length	ff Bar Size	ff Spacing	ff Length	gg Number ✦	gg D	hh Bar Size	hh Spacing	hh Length	hh F
6'	3'	12½"	8"	5	12"	4'-10	5	12"	9'-10	48	6	16"	13'-4	4'-7	2'-1	9½"	6	16"	13'-7	6	16"	13'-7	16	3'-0	4	8"	5'-4	2'-5
	4'	12½"	8"	5	12"	5'-10	5	12"	11'-10	54	6	16"	13'-4	4'-7	2'-1	9½"	6	16"	13'-7	6	16"	13'-7	16	3'-0	4	8"	5'-10	2'-5
	5'	12½"	8"	5	12"	6'-10	5	12"	13'-10	54	6	16"	13'-4	4'-7	2'-1	9½"	6	16"	13'-7	6	16"	13'-7	16	3'-0	4	8"	6'-4	2'-5
	6'	12½"	8"	5	12"	7'-10	5	12"	15'-10	60	5	12"	13'-4	4'-7	2'-1	9½"	5	12"	13'-7	5	12"	13'-7	16	3'-0	4	6"	6'-10	2'-5
	7'	12½"	8"	5	12"	8'-10	5	12"	17'-10	66	5	12"	13'-4	4'-7	2'-1	9½"	5	12"	13'-7	5	12"	13'-7	16	3'-0	4	6"	7'-4	2'-5
8'	3'	16"	9"	5	12"	5'-5	5	12"	11'-0	48	7	16"	17'-7	6'-1	2'-7	1'-1	4	16"	17'-10	7	16"	17'-10	20	4'-0	5	8"	6'-0	2'-7
	4'	16"	9"	5	12"	6'-5	5	12"	13'-0	54	7	16"	17'-7	6'-1	2'-7	1'-1	4	16"	17'-10	7	16"	17'-10	20	4'-0	5	8"	6'-6	2'-7
	5'	16"	9"	5	12"	7'-5	5	12"	15'-0	54	6	12"	17'-7	6'-1	2'-7	1'-1	4	12"	17'-10	6	12"	17'-10	20	4'-0	4	6"	6'-9	2'-6
	6'	16"	9"	5	12"	8'-5	5	12"	17'-0	60	6	12"	17'-7	6'-1	2'-7	1'-1	4	12"	17'-10	6	12"	17'-10	20	4'-0	4	6"	7'-3	2'-6
	7'	16"	9"	5	12"	9'-5	5	12"	19'-0	66	6	12"	17'-7	6'-1	2'-7	1'-1	4	12"	17'-10	6	12"	17'-10	20	4'-0	4	6"	7'-9	2'-6
	8'	16"	9"	5	12"	10'-5	5	12"	21'-0	66	6	12"	17'-7	6'-1	2'-7	1'-1	4	12"	17'-10	6	12"	17'-10	20	4'-0	4	6"	8'-3	2'-6
10'	3'	19"	11"	5	12"	5'-11	5	12"	11'-9	48	7	12"	22'-0	7'-7	3'-3	1'-4	4	12"	22'-4	7	12"	22'-4	24	5'-0	5	6"	6'-6	2'-9
	4'	19"	11"	5	12"	6'-11	5	12"	13'-9	54	7	12"	22'-0	7'-7	3'-3	1'-4	4	12"	22'-4	7	12"	22'-4	24	5'-0	5	6"	7'-0	2'-9
	5'	19"	11"	5	12"	7'-11	5	12"	15'-9	54	7	12"	22'-0	7'-7	3'-3	1'-4	4	12"	22'-4	7	12"	22'-4	24	5'-0	5	6"	7'-6	2'-9
	6'	19"	11"	5	12"	8'-11	5	12"	17'-9	60	7	12"	22'-0	7'-7	3'-3	1'-4	4	12"	22'-4	7	12"	22'-4	24	5'-0	5	6"	8'-0	2'-9
	7'	19"	11"	5	12"	9'-11	5	12"	19'-9	66	7	12"	22'-0	7'-7	3'-3	1'-4	4	12"	22'-4	7	12"	22'-4	24	5'-0	5	6"	8'-6	2'-9
	8'	19"	11"	5	12"	10'-11	5	12"	21'-9	66	7	12"	22'-0	7'-7	3'-3	1'-4	4	12"	22'-4	7	12"	22'-4	24	5'-0	5	6"	9'-0	2'-9
	9'	19"	11"	5	12"	11'-11	5	12"	23'-9	72	7	12"	22'-0	7'-7	3'-3	1'-4	4	12"	22'-4	7	12"	22'-4	24	5'-0	5	6"	9'-6	2'-9
	10'	19"	11"	5	11½"	12'-11	5	12"	25'-9	78	7	12"	22'-0	7'-7	3'-3	1'-4	4	12"	22'-4	7	12"	22'-4	24	5'-0	5	6"	10'-0	2'-9
12'	8'	23"	13"	5	12"	11'-7	5	12"	23'-0	66	8	14"	26'-5	9'-1	3'-9	1'-8	5	14"	26'-10	8	14"	26'-10	28	6'-0	6	7"	10'-0	3'-5
	9'	23"	13"	5	12"	12'-7	5	12"	25'-0	72	8	14"	26'-5	9'-1	3'-9	1'-8	5	14"	26'-10	8	14"	26'-10	28	6'-0	6	7"	10'-6	3'-5
	10'	23"	13"	5	12"	13'-7	5	12"	27'-0	78	8	14"	26'-5	9'-1	3'-9	1'-8	5	14"	26'-10	8	14"	26'-10	28	6'-0	6	7"	11'-0	3'-5
	11'	23"	13"	5	12"	14'-7	5	12"	29'-0	78	8	14"	26'-5	9'-1	3'-9	1'-8	5	14"	26'-10	8	14"	26'-10	28	6'-0	6	7"	11'-6	3'-5
	12'	23"	13"	5	9½"	15'-7	5	12"	31'-0	84	8	14"	26'-5	9'-1	3'-9	1'-8	6	14"	26'-10	8	14"	26'-10	28	6'-0	6	7"	12'-0	3'-5

NO	DESCRIPTION OF REVISIONS	MADE BY	DATE
1	Total Redesign of Box	J.M.	6-88
2			
3			
4			

DESIGN
DRAWN
CHECKED

CADD FILENAME= ZFA
VIEW NAME=

DESIGN APPROVED

APPROVED FOR DISTRIBUTION

ARIZONA
DEPARTMENT OF TRANSPORTATION
HIGHWAYS DIVISION
STANDARD DRAWINGS

DOUBLE BARREL
BOX CULVERT

REVISION 7-88

STANDARD NO. B-02.25

TABLE NO. I
0'-10' FILL

Span "S"	Height "H"	Top Slab "T"	Walls "W"	aa Spacing	aa Length	bb Spacing	bb Length	cc Number ✦	dd Bar Size	dd Spacing	dd Length	dd A	dd B	dd C	dd D	ee Bar Size	ee Spacing	ee Length	ff Bar Size	ff Spacing	ff Length	gg Number ✦	hh Bar Size	hh Spacing	hh Length	hh F
6'	3'	9½"	8"	12"	4'-4	12"	8'-9	68	5	14"	20'-2	4'-7	2'-7	6½"	3'-1	5	14"	20'-3	5	14"	20'-3	30	4	7"	5'-1	2'-5
	4'	9½"	8"	12"	5'-4	12"	10'-9	76	5	14"	20'-2	4'-7	2'-7	6½"	3'-1	5	14"	20'-3	5	14"	20'-3	30	4	7"	5'-7	2'-5
	5'	9½"	8"	12"	6'-4	12"	12'-9	76	5	14"	20'-2	4'-7	2'-7	6½"	3'-1	5	14"	20'-3	5	14"	20'-3	30	4	7"	6'-1	2'-5
	6'	9½"	8"	12"	7'-4	12"	14'-9	84	5	14"	20'-2	4'-7	2'-7	6½"	3'-1	5	14"	20'-3	5	14"	20'-3	30	4	7"	6'-7	2'-5
	7'	9½"	8"	12"	8'-4	12"	16'-9	92	5	13"	20'-2	4'-7	2'-7	6½"	3'-1	5	13"	20'-3	5	13"	20'-3	30	4	6½"	7'-1	2'-5
8'	3'	9½"	9"	12"	4'-4	12"	8'-9	68	6	14"	26'-4	6'-1	3'-8	6½"	4'-2	6	14"	26'-7	6	14"	26'-7	36	6	7"	5'-6	2'-6
	4'	9½"	9"	12"	5'-4	12"	10'-9	76	6	14"	26'-4	6'-1	3'-8	6½"	4'-2	6	14"	26'-7	6	14"	26'-7	36	6	7"	6'-0	2'-6
	5'	9½"	9"	12"	6'-4	12"	12'-9	76	6	14"	26'-4	6'-1	3'-8	6½"	4'-2	6	14"	26'-7	6	14"	26'-7	36	6	7"	6'-6	2'-6
	6'	9½"	9"	12"	7'-4	12"	14'-9	84	6	14"	26'-4	6'-1	3'-8	6½"	4'-2	6	14"	26'-7	6	14"	26'-7	36	6	7"	7'-0	2'-6
	7'	9½"	9"	12"	8'-4	12"	16'-9	92	6	13"	26'-4	6'-1	3'-8	6½"	4'-2	6	13"	26'-7	6	13"	26'-7	36	5	6½"	7'-5	2'-6
	8'	9½"	9"	12"	9'-4	12"	18'-9	92	6	13"	26'-4	6'-1	3'-8	6½"	4'-2	6	13"	26'-7	6	13"	26'-7	36	6	6½"	8'-0	2'-6
10'	3'	10½"	11"	12"	4'-6	12"	9'-2	68	7	17"	32'-9	7'-7	4'-8	7½"	5'-2	6	17"	33'-3	7	17"	33'-3	66	6	8½"	6'-1	3'-0
	4'	10½"	11"	12"	5'-6	12"	11'-2	76	7	17"	32'-9	7'-7	4'-8	7½"	5'-2	6	17"	33'-3	7	17"	33'-3	66	6	8½"	6'-7	3'-0
	5'	10½"	11"	12"	6'-6	12"	13'-2	76	6	12"	32'-9	7'-7	4'-8	7½"	5'-2	5	12"	33'-3	6	12"	33'-3	66	5	6"	6'-8	2'-8
	6'	10½"	11"	12"	7'-6	12"	15'-2	84	6	12"	32'-9	7'-7	4'-8	7½"	5'-2	5	12"	33'-3	6	12"	33'-3	66	5	6"	7'-2	2'-8
	7'	10½"	11"	12"	8'-6	12"	17'-2	92	7	15"	32'-9	7'-7	4'-8	7½"	5'-2	5	15"	33'-3	7	15"	33'-3	66	6	7½"	7'-9	2'-8
	8'	10½"	11"	12"	9'-6	12"	19'-2	92	7	15"	32'-9	7'-7	4'-8	7½"	5'-2	5	15"	33'-3	7	15"	33'-3	66	6	7½"	8'-3	2'-8
	9'	10½"	11"	12"	10'-6	12"	21'-2	100	7	15"	32'-9	7'-7	4'-8	7½"	5'-2	6	15"	33'-3	7	15"	33'-3	66	6	7½"	8'-9	2'-8
	10'	10½"	11"	12"	11'-6	12"	23'-2	108	7	14"	32'-9	7'-7	4'-8	7½"	5'-2	5	14"	33'-3	7	14"	33'-3	66	6	7"	9'-3	2'-8
12'	8'	12½"	13"	12"	9'-10	12"	20'-0	92	7	13"	39'-4	9'-1	5'-6	9½"	6'-2	5	13"	39'-11	7	13"	39'-11	78	6	6½"	8'-7	2'-10
	9'	12½"	13"	12"	10'-10	12"	22'-0	100	8	16"	39'-4	9'-1	5'-6	9½"	6'-2	5	16"	39'-11	8	16"	39'-11	78	6	8"	9'-1	2'-10
	10'	12½"	13"	12"	11'-10	12"	24'-0	108	8	16"	39'-4	9'-1	5'-6	9½"	6'-2	5	16"	39'-11	8	16"	39'-11	78	6	8"	9'-7	2'-10
	11'	12½"	13"	12"	12'-10	12"	26'-0	108	7	12"	39'-4	9'-1	5'-6	9½"	6'-2	4	12"	39'-11	7	12"	39'-11	78	6	6"	10'-1	2'-10
	12'	12½"	13"	12"	13'-10	12"	28'-0	116	7	12"	39'-4	9'-1	5'-6	9½"	6'-2	5	12"	39'-11	7	12"	39'-11	78	6	6"	10'-8	2'-10

✦ Total number of bars in the cross-section.

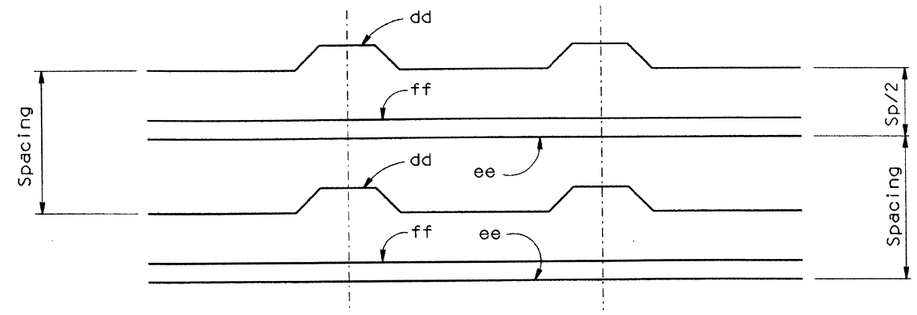

REINFORCING BAR PLACING DIAGRAM

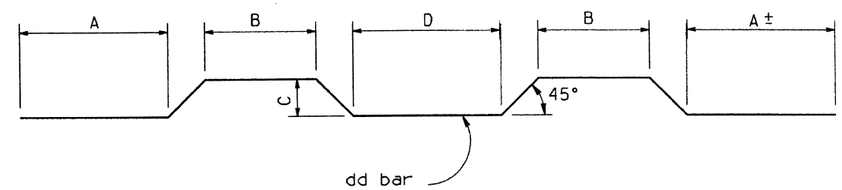

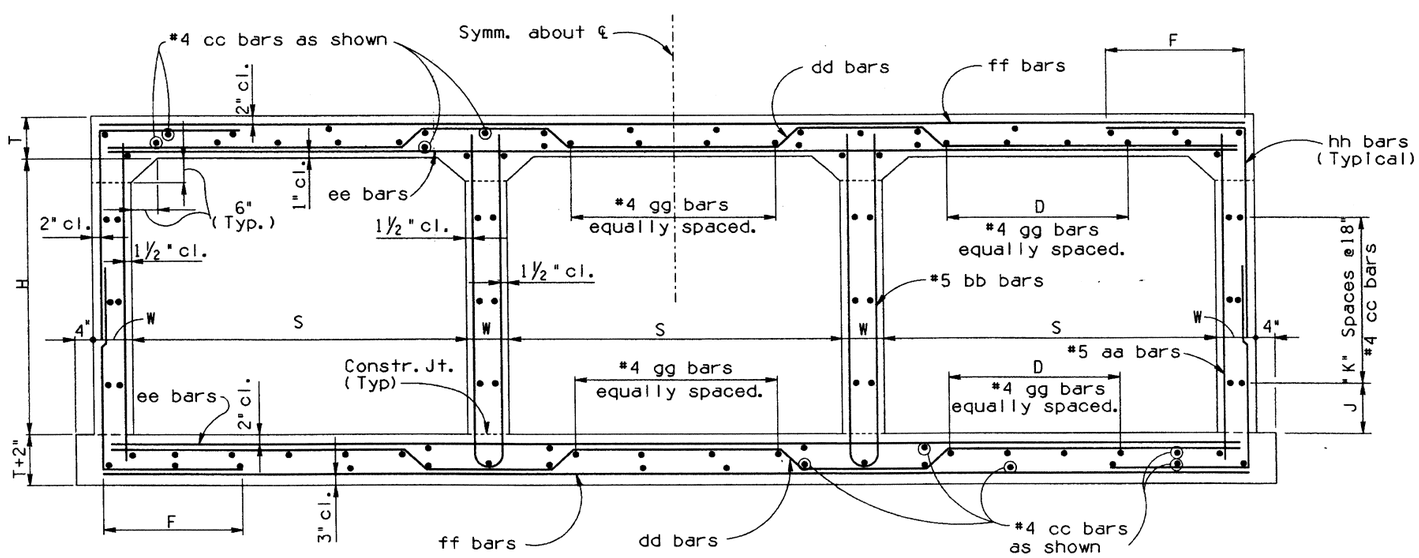

TYPICAL SECTION

NOTE:

Reinforcing shown is for placement location only.
Use the appropiate table to determine the reinforcing requirements.

Height "H"	"J" Dim.	"K" Spaces
3'	9"	1
4'	3"	2
5'	12"	2
6'	9"	3
7'	3"	4
8'	12"	4
9'	9"	5
10'	3"	6
11'	12"	6
12'	9"	7

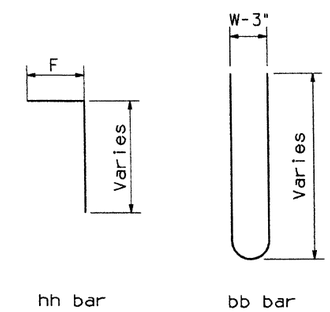

BENDS

NOTE:

See B-02.35 for Tables II thru V.
See B-01.10 for General Notes and Miscellaneous Details.
See B-02.70 for Quantities.

NO	DESCRIPTION OF REVISIONS	MADE BY	DATE
1	Total Redesign of Box	C.H.	6-88
2	Clarified bars callout	C.H.	4-92
3			
4			

DESIGN
DRAWN
CHECKED

CADD FILENAME= ZFA
VIEW NAME=

Registered Professional Engineer (Civil) CERTIFICATE NO. 9910 F. DANIEL DAVIS Expires 6-30-92 Arizona U.S.A.

DESIGN APPROVED — F. Daniel Davis

APPROVED FOR DISTRIBUTION

ARIZONA
DEPARTMENT OF TRANSPORTATION
HIGHWAYS DIVISION
STANDARD DRAWINGS

TRIPLE BARREL
BOX CULVERT

REVISION 4-92

STANDARD NO. B-02.30

TABLE NO. II
10'-15' FILL

Span 'S'	Height 'H'	Top Slab 'T'	Walls 'W'	aa Spacing	aa Length	bb Spacing	bb Length	cc Number ✦	dd Bar Size	dd Spacing	dd Length	dd A	dd B	dd C	dd D	ee Bar Size	ee Spacing	ee Length	ff Bar Size	ff Spacing	ff Length	gg Number ✦	hh Bar Size	hh Spacing	hh Length	hh F
6'	3'	8"	8"	12"	4'-1	12"	8'-3	68	5	14"	20'-0	4'-7	2'-10	5"	3'-1	5	14"	20'-3	5	14"	20'-3	24	4	7"	5'-0	2'-5
	4'	8"	8"	12"	5'-1	12"	10'-3	76	5	14"	20'-0	4'-7	2'-10	5"	3'-1	5	14"	20'-3	5	14"	20'-3	24	4	7"	5'-6	2'-5
	5'	8"	8"	12"	6'-1	12"	12'-3	76	5	14"	20'-0	4'-7	2'-10	5"	3'-1	5	14"	20'-3	5	14"	20'-3	24	4	7"	6'-0	2'-5
	6'	8"	8"	12"	7'-1	12"	14'-3	84	5	14"	20'-0	4'-7	2'-10	5"	3'-1	5	14"	20'-3	5	14"	20'-3	24	4	7"	6'-6	2'-5
	7'	8"	8"	12"	8'-1	12"	16'-3	92	5	14"	20'-0	4'-7	2'-10	5"	3'-1	5	14"	20'-3	5	14"	20'-3	24	4	7"	7'-0	2'-5
8'	3'	10½"	9"	12"	4'-6	12"	9'-2	68	6	13"	26'-6	6'-1	3'-6	7½"	4'-2	5	13"	26'-7	6	13"	26'-7	30	4	6½"	5'-3	2'-6
	4'	10½"	9"	12"	5'-6	12"	11'-2	76	6	13"	26'-6	6'-1	3'-6	7½"	4'-2	4	13"	26'-7	6	13"	26'-7	30	4	6½"	5'-9	2'-6
	5'	10½"	9"	12"	6'-6	12"	13'-2	76	6	13"	26'-6	6'-1	3'-6	7½"	4'-2	4	13"	26'-7	6	13"	26'-7	30	4	6½"	6'-3	2'-6
	6'	10½"	9"	12"	7'-6	12"	15'-2	84	6	13"	26'-6	6'-1	3'-6	7½"	4'-2	4	13"	26'-7	6	13"	26'-7	30	4	6½"	6'-9	2'-6
	7'	10½"	9"	12"	8'-6	12"	17'-2	92	6	13"	26'-6	6'-1	3'-6	7½"	4'-2	4	13"	26'-7	6	13"	26'-7	30	4	6½"	7'-3	2'-6
	8'	10½"	9"	12"	9'-6	12"	19'-2	92	6	12"	26'-6	6'-1	3'-6	7½"	4'-2	4	12"	26'-7	6	12"	26'-7	30	4	6"	7'-9	2'-6
10'	3'	12½"	11"	12"	4'-10	12"	9'-8	68	7	14"	33'-1	7'-7	4'-4	9½"	5'-2	4	14"	33'-3	7	14"	33'-3	36	5	7"	5'-10	2'-8
	4'	12½"	11"	12"	5'-10	12"	11'-8	76	7	13"	33'-1	7'-7	4'-4	9½"	5'-2	4	13"	33'-3	7	13"	33'-3	36	4	6½"	6'-1	2'-8
	5'	12½"	11"	12"	6'-10	12"	13'-8	76	7	14"	33'-1	7'-7	4'-4	9½"	5'-2	4	14"	33'-3	7	14"	33'-3	36	5	7"	6'-10	2'-8
	6'	12½"	11"	12"	7'-10	12"	15'-8	84	7	13"	33'-1	7'-7	4'-4	9½"	5'-2	4	13"	33'-3	7	13"	33'-3	36	5	6½"	7'-4	2'-8
	7'	12½"	11"	12"	8'-10	12"	17'-8	92	7	13"	33'-1	7'-7	4'-4	9½"	5'-2	4	13"	33'-3	7	13"	33'-3	36	5	6½"	7'-10	2'-8
	8'	12½"	11"	12"	9'-10	12"	19'-8	92	7	13"	33'-1	7'-7	4'-4	9½"	5'-2	4	13"	33'-3	7	13"	33'-3	36	5	6½"	8'-4	2'-8
	9'	12½"	11"	12"	10'-10	12"	21'-8	100	7	13"	33'-1	7'-7	4'-4	9½"	5'-2	4	13"	33'-3	7	13"	33'-3	36	5	6½"	8'-10	2'-8
	10'	12½"	11"	12"	11'-10	12"	23'-8	108	7	13"	33'-1	7'-7	4'-4	9½"	5'-2	4	13"	33'-3	7	13"	33'-3	36	5	6½"	9'-4	2'-8
12'	8'	15"	13"	12"	10'-3	12"	20'-6	92	8	15"	39'-8	9'-1	5'-1	12"	6'-2	4	15"	39'-11	8	15"	39'-11	42	6	7½"	8'-8	2'-11
	9'	15"	13"	12"	11'-3	12"	22'-6	100	8	15"	39'-8	9'-1	5'-1	12"	6'-2	4	15"	39'-11	8	15"	39'-11	42	6	7½"	9'-2	2'-11
	10'	15"	13"	12"	12'-3	12"	24'-6	108	8	15"	39'-8	9'-1	5'-1	12"	6'-2	5	15"	39'-11	8	15"	39'-11	42	6	7½"	9'-8	2'-11
	11'	15"	13"	12"	13'-3	12"	26'-6	108	8	14"	39'-8	9'-1	5'-1	12"	6'-2	4	14"	39'-11	8	14"	39'-11	42	5	7"	10'-8	3'-5
	12'	15"	13"	12"	14'-3	12"	28'-6	116	8	14"	39'-8	9'-1	5'-1	12"	6'-2	5	14"	39'-11	8	14"	39'-11	42	6	7"	11'-2	3'-5

TABLE NO. III
15'-20' FILL

Span 'S'	Height 'H'	Top Slab 'T'	Walls 'W'	aa Spacing	aa Length	bb Spacing	bb Length	cc Number ✦	dd Bar Size	dd Spacing	dd Length	dd A	dd B	dd C	dd D	ee Bar Size	ee Spacing	ee Length	ff Bar Size	ff Spacing	ff Length	gg Number ✦	hh Bar Size	hh Spacing	hh Length	hh F
6'	3'	9½"	8"	12"	4'-4	12"	8'-9	68	5	13"	20'-2	4'-7	2'-7	6½"	3'-1	5	13"	20'-3	5	13"	20'-3	24	4	6½"	5'-1	2'-5
	4'	9½"	8"	12"	5'-4	12"	10'-9	76	5	13"	20'-2	4'-7	2'-7	6½"	3'-1	5	13"	20'-3	5	13"	20'-3	24	4	6½"	5'-7	2'-5
	5'	9½"	8"	12"	6'-4	12"	12'-9	76	5	13"	20'-2	4'-7	2'-7	6½"	3'-1	5	13"	20'-3	5	13"	20'-3	24	4	6½"	6'-1	2'-5
	6'	9½"	8"	12"	7'-4	12"	14'-9	84	5	13"	20'-2	4'-7	2'-7	6½"	3'-1	5	13"	20'-3	5	13"	20'-3	24	4	6½"	6'-7	2'-5
	7'	9½"	8"	12"	8'-4	12"	16'-9	92	5	13"	20'-2	4'-7	2'-7	6½"	3'-1	5	13"	20'-3	5	13"	20'-3	24	4	6½"	7'-1	2'-5
8'	3'	12"	9"	12"	4'-9	12"	9'-8	68	6	12"	26'-9	6'-1	3'-3	9"	4'-2	4	12"	26'-7	6	12"	26'-7	30	4	6"	5'-5	2'-6
	4'	12"	9"	12"	5'-9	12"	11'-8	76	6	12"	26'-9	6'-1	3'-3	9"	4'-2	4	12"	26'-7	6	12"	26'-7	30	4	6"	5'-11	2'-6
	5'	12"	9"	12"	6'-9	12"	13'-8	76	6	12"	26'-9	6'-1	3'-3	9"	4'-2	4	12"	26'-7	6	12"	26'-7	30	4	6"	6'-5	2'-6
	6'	12"	9"	12"	7'-9	12"	15'-8	84	6	12"	26'-9	6'-1	3'-3	9"	4'-2	4	12"	26'-7	6	12"	26'-7	30	4	6"	6'-11	2'-6
	7'	12"	9"	12"	8'-9	12"	17'-8	92	6	12"	26'-9	6'-1	3'-3	9"	4'-2	4	12"	26'-7	6	12"	26'-7	30	4	6"	7'-5	2'-6
	8'	12"	9"	12"	9'-9	12"	19'-8	92	6	12"	26'-9	6'-1	3'-3	9"	4'-2	4	12"	26'-7	6	12"	26'-7	30	4	6"	7'-11	2'-6
10'	3'	15"	11"	12"	5'-3	12"	10'-8	68	7	13"	33'-5	7'-7	3'-11	1'-0	5'-2	4	13"	33'-3	7	13"	33'-3	36	5	6½"	6'-0	2'-8
	4'	15"	11"	12"	6'-3	12"	12'-8	76	7	13"	33'-5	7'-7	3'-11	1'-0	5'-2	4	13"	33'-3	7	13"	33'-3	36	5	6½"	6'-6	2'-8
	5'	15"	11"	12"	7'-3	12"	14'-8	76	7	13"	33'-5	7'-7	3'-11	1'-0	5'-2	4	13"	33'-3	7	13"	33'-3	36	5	6½"	7'-0	2'-8
	6'	15"	11"	12"	8'-3	12"	16'-8	84	7	13"	33'-5	7'-7	3'-11	1'-0	5'-2	4	13"	33'-3	7	13"	33'-3	36	5	6½"	7'-6	2'-8
	7'	15"	11"	12"	9'-3	12"	18'-8	92	7	13"	33'-5	7'-7	3'-11	1'-0	5'-2	4	13"	33'-3	7	13"	33'-3	36	5	6½"	8'-0	2'-8
	8'	15"	11"	12"	10'-3	12"	20'-8	92	7	13"	33'-5	7'-7	3'-11	1'-0	5'-2	4	13"	33'-3	7	13"	33'-3	36	5	6½"	8'-6	2'-8
	9'	15"	11"	12"	11'-3	12"	22'-8	100	7	13"	33'-5	7'-7	3'-11	1'-0	5'-2	4	13"	33'-3	7	13"	33'-3	36	5	6½"	9'-0	2'-8
	10'	15"	11"	12"	12'-3	12"	24'-8	108	7	13"	33'-5	7'-7	3'-11	1'-0	5'-2	4	13"	33'-3	7	13"	33'-3	36	5	6½"	9'-6	2'-9
12'	8'	18"	13"	12"	10'-9	12"	21'-6	92	8	14"	40'-1	9'-1	4'-7	1'-3	6'-2	4	14"	39'-11	8	14"	39'-11	42	5	7"	9'-6	3'-5
	9'	18"	13"	12"	11'-9	12"	23'-6	100	8	14"	40'-1	9'-1	4'-7	1'-3	6'-2	4	14"	39'-11	8	14"	39'-11	42	5	7"	10'-0	3'-5
	10'	18"	13"	12"	12'-9	12"	25'-6	108	8	14"	40'-1	9'-1	4'-7	1'-3	6'-2	4	14"	39'-11	8	14"	39'-11	42	6	7"	10'-7	3'-5
	11'	18"	13"	12"	13'-9	12"	27'-6	108	8	14"	40'-1	9'-1	4'-7	1'-3	6'-2	5	14"	39'-11	8	14"	39'-11	42	6	7"	11'-1	3'-5
	12'	18"	13"	12"	14'-9	12"	29'-6	116	8	14"	40'-1	9'-1	4'-7	1'-3	6'-2	5	14"	39'-11	8	14"	39'-11	42	6	7"	11'-7	3'-5

TABLE NO. IV
20'-25' FILL

Span 'S'	Height 'H'	Top Slab 'T'	Walls 'W'	aa Spacing	aa Length	bb Spacing	bb Length	cc Number ✦	dd Bar Size	dd Spacing	dd Length	dd A	dd B	dd C	dd D	ee Bar Size	ee Spacing	ee Length	ff Bar Size	ff Spacing	ff Length	gg Number ✦	hh Bar Size	hh Spacing	hh Length	hh F
6'	3'	11"	8"	12"	4'-7	12"	9'-2	68	5	12"	20'-5	4'-7	2'-4	8"	3'-1	5	12"	20'-3	5	12"	20'-3	24	4	6"	5'-3	2'-5
	4'	11"	8"	12"	5'-7	12"	11'-2	76	5	12"	20'-5	4'-7	2'-4	8"	3'-1	5	12"	20'-3	5	12"	20'-3	24	4	6"	5'-9	2'-5
	5'	11"	8"	12"	6'-7	12"	13'-2	76	5	12"	20'-5	4'-7	2'-4	8"	3'-1	5	12"	20'-3	5	12"	20'-3	24	4	6"	6'-3	2'-5
	6'	11"	8"	12"	7'-7	12"	15'-2	84	5	12"	20'-5	4'-7	2'-4	8"	3'-1	5	12"	20'-3	5	12"	20'-3	24	4	6"	6'-9	2'-5
	7'	11"	8"	12"	8'-7	12"	17'-2	92	5	12"	20'-5	4'-7	2'-4	8"	3'-1	5	12"	20'-3	5	12"	20'-3	24	4	6"	7'-3	2'-5
8'	3'	14"	9"	12"	5'-1	12"	10'-2	68	6	12"	27'-0	6'-1	2'-11	11"	4'-2	4	12"	26'-7	6	12"	26'-7	30	4	6"	5'-7	2'-6
	4'	14"	9"	12"	6'-1	12"	12'-2	76	6	12"	27'-0	6'-1	2'-11	11"	4'-2	4	12"	26'-7	6	12"	26'-7	30	4	6"	6'-1	2'-6
	5'	14"	9"	12"	7'-1	12"	14'-2	76	6	12"	27'-0	6'-1	2'-11	11"	4'-2	4	12"	26'-7	6	12"	26'-7	30	4	6"	6'-7	2'-6
	6'	14"	9"	12"	8'-1	12"	16'-2	84	6	12"	27'-0	6'-1	2'-11	11"	4'-2	4	12"	26'-7	6	12"	26'-7	30	4	6"	7'-1	2'-6
	7'	14"	9"	12"	9'-1	12"	18'-2	92	6	12"	27'-0	6'-1	2'-11	11"	4'-2	4	12"	26'-7	6	12"	26'-7	30	4	6"	7'-7	2'-6
	8'	14"	9"	12"	10'-1	12"	20'-2	92	6	12"	27'-0	6'-1	2'-11	11"	4'-2	4	12"	26'-7	6	12"	26'-7	30	4	6"	8'-1	2'-6
10'	3'	17"	11"	12"	5'-7	12"	11'-2	68	7	13"	33'-8	7'-7	3'-7	1'-2	5'-2	4	13"	33'-3	7	13"	33'-3	36	5	6½"	6'-3	2'-9
	4'	17"	11"	12"	6'-7	12"	13'-2	76	7	13"	33'-8	7'-7	3'-7	1'-2	5'-2	4	13"	33'-3	7	13"	33'-3	36	5	6½"	6'-9	2'-9
	5'	17"	11"	12"	7'-7	12"	15'-2	76	7	13"	33'-8	7'-7	3'-7	1'-2	5'-2	4	13"	33'-3	7	13"	33'-3	36	5	6½"	7'-3	2'-9
	6'	17"	11"	12"	8'-7	12"	17'-2	84	7	13"	33'-8	7'-7	3'-7	1'-2	5'-2	4	13"	33'-3	7	13"	33'-3	36	5	6½"	7'-9	2'-9
	7'	17"	11"	12"	9'-7	12"	19'-2	92	7	13"	33'-8	7'-7	3'-7	1'-2	5'-2	4	13"	33'-3	7	13"	33'-3	36	5	6½"	8'-3	2'-9
	8'	17"	11"	12"	10'-7	12"	21'-2	92	7	13"	33'-8	7'-7	3'-7	1'-2	5'-2	4	13"	33'-3	7	13"	33'-3	36	5	6½"	8'-9	2'-9
	9'	17"	11"	12"	11'-7	12"	23'-2	100	7	13"	33'-8	7'-7	3'-7	1'-2	5'-2	4	13"	33'-3	7	13"	33'-3	36	5	6½"	9'-3	2'-9
	10'	17"	11"	12"	12'-7	12"	25'-2	108	7	13"	33'-8	7'-7	3'-7	1'-2	5'-2	4	13"	33'-3	7	13"	33'-3	36	5	6½"	9'-9	2'-9
12'	8'	20½"	13"	12"	11'-2	12"	22'-6	92	8	14"	40'-5	9'-1	4'-2	1'-5½"	6'-2	5	14"	39'-11	8	14"	39'-11	42	6	7"	9'-5	2'-11
	9'	20½"	13"	12"	12'-2	12"	24'-6	100	8	14"	40'-5	9'-1	4'-2	1'-5½"	6'-2	5	14"	39'-11	8	14"	39'-11	42	6	7"	9'-10	2'-11
	10'	20½"	13"	12"	13'-2	12"	26'-6	108	8	14"	40'-5	9'-1	4'-2	1'-5½"	6'-2	5	14"	39'-11	8	14"	39'-11	42	6	7"	10'-4	2'-11
	11'	20½"	13"	12"	14'-2	12"	28'-6	108	8	14"	40'-5	9'-1	4'-2	1'-5½"	6'-2	5	14"	39'-11	8	14"	39'-11	42	6	7"	11'-4	3'-5
	12'	20½"	13"	12"	15'-2	12"	30'-6	116	8	13"	40'-5	9'-1	4'-2	1'-5½"	6'-2	5	13"	39'-11	8	13"	39'-11	42	5	6½"	11'-9	3'-5

✦ Total number of bars in the cross-section.

TABLE NO. V
25'-30' FILL

Span 'S'	Height 'H'	Top Slab 'T'	Walls 'W'	aa Spacing	aa Length	bb Spacing	bb Length	cc Number ✦	dd Bar Size	dd Spacing	dd Length	dd A	dd B	dd C	dd D	ee Bar Size	ee Spacing	ee Length	ff Bar Size	ff Spacing	ff Length	gg Number ✦	hh Bar Size	hh Spacing	hh Length	hh F
6'	3'	12½"	8"	12"	4'-10	12"	9'-10	68	6	16"	20'-6	4'-7	2'-1	9½"	3'-1	6	16"	20'-3	6	16"	20'-3	24	4	8"	5'-4	2'-5
	4'	12½"	8"	12"	5'-10	12"	11'-10	76	6	16"	20'-6	4'-7	2'-1	9½"	3'-1	6	16"	20'-3	6	16"	20'-3	24	4	8"	5'-10	2'-5
	5'	12½"	8"	12"	6'-10	12"	13'-10	76	6	16"	20'-6	4'-7	2'-1	9½"	3'-1	6	16"	20'-3	6	16"	20'-3	24	4	8"	6'-4	2'-5
	6'	12½"	8"	12"	7'-10	12"	15'-10	84	5	12"	20'-6	4'-7	2'-1	9½"	3'-1	5	12"	20'-3	5	12"	20'-3	24	4	6"	6'-10	2'-5
	7'	12½"	8"	12"	8'-10	12"	17'-10	92	5	12"	20'-6	4'-7	2'-1	9½"	3'-1	5	12"	20'-3	5	12"	20'-3	24	4	6"	7'-4	2'-5
8'	3'	16"	9"	12"	5'-5	12"	11'-1	68	7	16"	27'-3	6'-1	2'-7	1'-1	4'-2	4	16"	26'-7	7	16"	26'-7	30	5	8"	6'-0	2'-7
	4'	16"	9"	12"	6'-5	12"	13'-1	76	7	16"	27'-3	6'-1	2'-7	1'-1	4'-2	4	16"	26'-7	7	16"	26'-7	30	5	8"	6'-6	2'-7
	5'	16"	9"	12"	7'-5	12"	15'-1	76	6	12"	27'-3	6'-1	2'-7	1'-1	4'-2	4	12"	26'-7	6	12"	26'-7	30	4	6"	6'-9	2'-6
	6'	16"	9"	12"	8'-5	12"	17'-1	84	6	12"	27'-3	6'-1	2'-7	1'-1	4'-2	4	12"	26'-7	6	12"	26'-7	30	4	6"	7'-3	2'-6
	7'	16"	9"	12"	9'-5	12"	19'-1	92	6	12"	27'-3	6'-1	2'-7	1'-1	4'-2	4	12"	26'-7	6	12"	26'-7	30	4	6"	7'-9	2'-6
	8'	16"	9"	12"	10'-5	12"	21'-1	92	6	12"	27'-3	6'-1	2'-7	1'-1	4'-2	4	12"	26'-7	6	12"	26'-7	30	4	6"	8'-3	2'-6
10'	3'	19"	11"	12"	5'-11	12"	11'-9	68	7	12"	34'-0	7'-7	3'-3	1'-4	5'-2	4	12"	33'-3	7	12"	33'-3	36	5	6"	6'-4	2'-9
	4'	19"	11"	12"	6'-11	12"	13'-9	76	7	12"	34'-0	7'-7	3'-3	1'-4	5'-2	4	12"	33'-3	7	12"	33'-3	36	5	6"	6'-10	2'-9
	5'	19"	11"	12"	7'-11	12"	15'-9	76	7	12"	34'-0	7'-7	3'-3	1'-4	5'-2	4	12"	33'-3	7	12"	33'-3	36	5	6"	7'-4	2'-9
	6'	19"	11"	12"	8'-11	12"	17'-9	84	7	12"	34'-0	7'-7	3'-3	1'-4	5'-2	4	12"	33'-3	7	12"	33'-3	36	5	6"	7'-10	2'-9
	7'	19"	11"	12"	9'-11	12"	19'-9	92	7	12"	34'-0	7'-7	3'-3	1'-4	5'-2	4	12"	33'-3	7	12"	33'-3	36	5	6"	8'-4	2'-9
	8'	19"	11"	12"	10'-11	12"	21'-9	92	7	12"	34'-0	7'-7	3'-3	1'-4	5'-2	4	12"	33'-3	7	12"	33'-3	36	5	6"	8'-10	2'-9
	9'	19"	11"	12"	11'-11	12"	23'-9	100	7	12"	34'-0	7'-7	3'-3	1'-4	5'-2	4	12"	33'-3	7	12"	33'-3	36	5	6"	9'-4	2'-9
	10'	19"	11"	9"	12'-11	12"	25'-9	108	7	12"	34'-0	7'-7	3'-3	1'-4	5'-2	4	12"	33'-3	7	12"	33'-3	36	5	6"	9'-10	2'-9
12'	8'	23"	13"	12"	11'-7	12"	23'-0	92	8	14"	40'-9	9'-1	3'-9	1'-8	6'-2	5	14"	39'-11	8	14"	39'-11	42	6	7"	10'-0	3'-5
	9'	23"	13"	12"	12'-7	12"	25'-0	100	8	14"	40'-9	9'-1	3'-9	1'-8	6'-2	5	14"	39'-11	8	14"	39'-11	42	6	7"	10'-6	3'-5
	10'	23"	13"	12"	13'-7	12"	27'-0	108	8	14"	40'-9	9'-1	3'-9	1'-8	6'-2	5	14"	39'-11	8	14"	39'-11	42	6	7"	11'-0	3'-5
	11'	23"	13"	12"	14'-7	12"	29'-0	108	8	14"	40'-9	9'-1	3'-9	1'-8	6'-2	5	14"	39'-11	8	14"	39'-11	42	6	7"	11'-6	3'-5
	12'	23"	13"	7"	15'-7	12"	31'-0	116	8	14"	40'-9	9'-1	3'-9	1'-8	6'-2	6	14"	39'-11	8	14"	39'-11	42	6	7"	12'-0	3'-5

NO	DESCRIPTION OF REVISIONS	DATE	MADE BY
1	Total Redesign of Box	6-88	C.H.
2			
3			
4			

DESIGN
DRAWN
CHECKED

CADD FILENAME= ZFA
VIEW NAME=

Registered Professional Engineer (Civil) CERTIFICATE NO. 9910 F. DANIEL DAVIS STATE OF ARIZONA U.S.A.

DESIGN APPROVED
F. D. Davis

APPROVED FOR DISTRIBUTION
T. A. Bryant, II.

ARIZONA
DEPARTMENT OF TRANSPORTATION
HIGHWAYS DIVISION
STANDARD DRAWINGS

TRIPLE BARREL
BOX CULVERT

REVISION
7-88

STANDARD NO.
B-02.35

TABLE I
0'-10' FILL

Span "S"	Height "H"	Top Slab "T"	Walls "W"	aa Spacing	aa Length	bb Spacing	bb Length	cc Number ✦	dd Bar Size	dd Spacing	dd Length	dd A	dd B	dd C	dd D	ee Bar Size	ee Spacing	ee Length	ff Bar Size	ff Spacing	ff Length	gg Number ✦	hh Bar Size	hh Spacing	hh Length	hh F
6'	3'	9½"	8"	12"	4'-4	12"	8'-9	88	5	14"	27'-3	4'-7	2'-7	6½"	3'-1	5	14"	14'-0	5	14"	26'-11	40	4	7"	5'-1	2'-5
	4'	9½"	8"	12"	5'-4	12"	10'-9	98	5	14"	27'-3	4'-7	2'-7	6½"	3'-1	5	14"	14'-0	5	14"	26'-11	40	4	7"	5'-7	2'-5
	5'	9½"	8"	12"	6'-4	12"	12'-9	98	5	14"	27'-3	4'-7	2'-7	6½"	3'-1	5	14"	14'-0	5	14"	26'-11	40	4	7"	6'-1	2'-5
	6'	9½"	8"	12"	7'-4	12"	14'-9	108	5	14"	27'-3	4'-7	2'-7	6½"	3'-1	5	14"	14'-0	5	14"	26'-11	40	4	7"	6'-7	2'-5
	7'	9½"	8"	12"	8'-4	12"	16'-9	118	5	13"	27'-3	4'-7	2'-7	6½"	3'-1	5	13"	14'-0	5	13"	26'-11	40	4	6½"	7'-1	2'-5
8'	3'	9½"	9"	12"	4'-4	12"	8'-9	88	6	14"	35'-7	6'-1	3'-8	6½"	4'-2	6	14"	18'-3	6	14"	35'-4	56	6	7"	5'-6	2'-6
	4'	9½"	9"	12"	5'-4	12"	10'-9	98	6	14"	35'-7	6'-1	3'-8	6½"	4'-2	6	14"	18'-3	6	14"	35'-4	56	6	7"	6'-0	2'-6
	5'	9½"	9"	12"	6'-4	12"	12'-9	98	6	14"	35'-7	6'-1	3'-8	6½"	4'-2	6	14"	18'-3	6	14"	35'-4	56	6	7"	6'-6	2'-6
	6'	9½"	9"	12"	7'-4	12"	14'-9	108	6	14"	35'-7	6'-1	3'-8	6½"	4'-2	6	14"	18'-3	6	14"	35'-4	56	6	7"	6'-11	2'-6
	7'	9½"	9"	12"	8'-4	12"	16'-9	118	6	13"	35'-7	6'-1	3'-8	6½"	4'-2	6	13"	18'-3	6	13"	35'-4	56	5	6½"	7'-5	2'-6
	8'	9½"	9"	12"	9'-4	12"	18'-9	118	6	13"	35'-7	6'-1	3'-8	6½"	4'-2	6	13"	18'-3	6	13"	35'-4	56	6	6½"	8'-0	2'-6
10'	3'	10½"	11"	12"	4'-6	12"	9'-2	88	7	17"	44'-2	7'-7	4'-8	7½"	5'-2	6	17"	22'-8	7	17"	44'-2	64	6	8½"	6'-1	3'-0
	4'	10½"	11"	12"	5'-6	12"	11'-2	98	7	17"	44'-2	7'-7	4'-8	7½"	5'-2	6	17"	22'-8	7	17"	44'-2	64	6	8½"	6'-7	3'-0
	5'	10½"	11"	12"	6'-6	12"	13'-2	98	6	12"	44'-2	7'-7	4'-8	7½"	5'-2	5	12"	22'-8	6	12"	44'-2	64	5	6"	6'-8	2'-8
	6'	10½"	11"	12"	7'-6	12"	15'-2	108	6	12"	44'-2	7'-7	4'-8	7½"	5'-2	5	12"	22'-8	6	12"	44'-2	64	5	6"	7'-2	2'-8
	7'	10½"	11"	12"	8'-6	12"	17'-2	118	7	15"	44'-2	7'-7	4'-8	7½"	5'-2	5	15"	22'-8	7	15"	44'-2	64	6	7½"	7'-9	2'-8
	8'	10½"	11"	12"	9'-6	12"	19'-2	118	7	15"	44'-2	7'-7	4'-8	7½"	5'-2	5	15"	22'-8	7	15"	44'-2	64	6	7½"	8'-3	2'-8
	9'	10½"	11"	12"	10'-6	12"	21'-2	128	7	15"	44'-2	7'-7	4'-8	7½"	5'-2	6	15"	22'-8	7	15"	44'-2	64	6	7½"	8'-9	2'-8
	10'	10½"	11"	12"	11'-6	12"	23'-2	138	7	14"	44'-2	7'-7	4'-8	7½"	5'-2	5	14"	22'-8	7	14"	44'-2	64	6	7"	9'-3	2'-8
12'	8'	12½"	13"	12"	9'-10	12"	20'-0	118	7	13"	53'-0	9'-1	5'-6	9½"	6'-2	5	13"	27'-0	7	13"	53'-0	88	6	6½"	8'-7	2'-10
	9'	12½"	13"	12"	10'-10	12"	22'-0	128	8	16"	53'-0	9'-1	5'-6	9½"	6'-2	5	16"	27'-0	8	16"	53'-0	88	6	8"	9'-1	2'-10
	10'	12½"	13"	12"	11'-10	12"	24'-0	138	8	16"	53'-0	9'-1	5'-6	9½"	6'-2	5	16"	27'-0	8	16"	53'-0	88	6	8"	9'-7	2'-10
	11'	12½"	13"	12"	12'-10	12"	26'-0	138	7	12"	53'-0	9'-1	5'-6	9½"	6'-2	4	12"	27'-0	7	12"	53'-0	88	6	6"	10'-1	2'-10
	12'	12½"	13"	12"	13'-10	12"	28'-0	148	7	12"	53'-0	9'-1	5'-6	9½"	6'-2	5	12"	27'-0	7	12"	53'-0	88	6	6"	10'-7	2'-10

✦ Total number of bars in the cross-section.

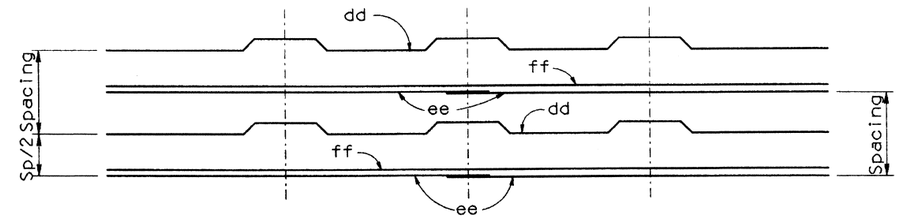

REINFORCING BAR PLACING DIAGRAM

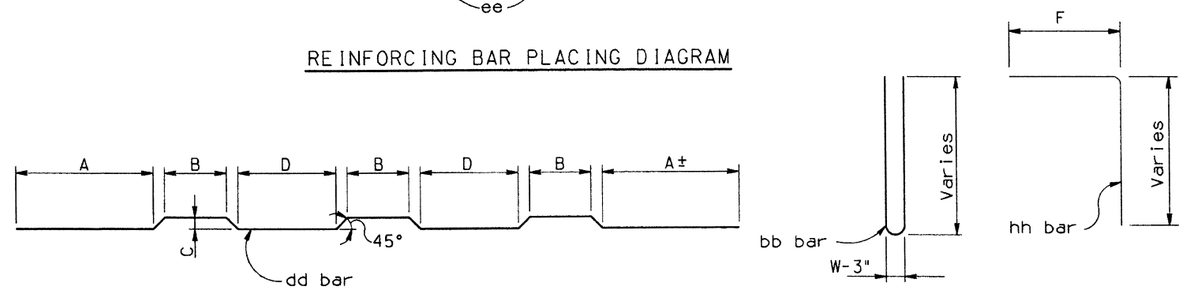

BENDS

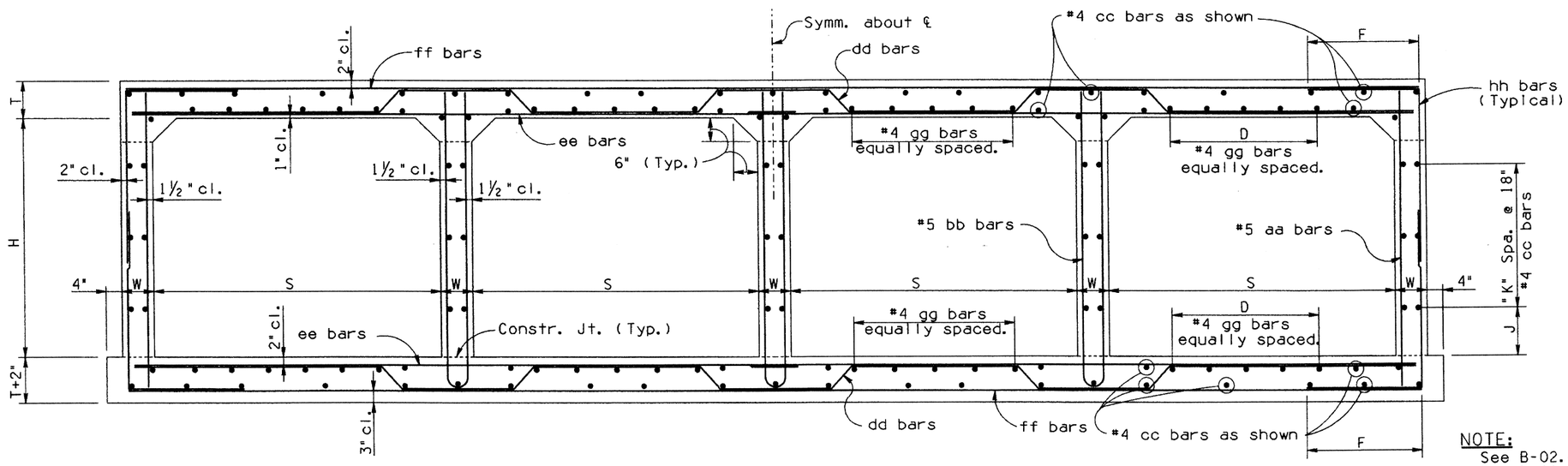

Height "H"	"J" Dim.	"K" Spaces
3'	9"	1
4'	3"	2
5'	12"	2
6'	9"	3
7'	3"	4
8'	12"	4
9'	9"	5
10'	3"	6
11	12"	6
12'	9"	7

NOTE:
See B-02.45 for Tables II thru V.
See B-01.10 for General Notes and Miscellaneous Details.
See B-02.70 for Quantities.

TYPICAL SECTION

NOTE:
Reinforcing shown is for placement location only.
Use the appropiate table to determine the reinforcing requirements.

NO	DESCRIPTION OF REVISIONS	MADE BY	DATE
1	Total Redesign of Box	J.W.	6-88
2	Clarified bars callout	J.W.	4-92
3			
4			

DESIGN
DRAWN
CHECKED

CADD FILENAME= ZFA
VIEW NAME=

DESIGN APPROVED
F. Daniel Davis
APPROVED FOR DISTRIBUTION

ARIZONA
DEPARTMENT OF TRANSPORTATION
HIGHWAYS DIVISION
STANDARD DRAWINGS

FOUR BARREL
BOX CULVERT

REVISION 4-92

STANDARD NO. B-02.40

TABLE I
0'-10' FILL

Span "S"	Height "H"	Top Slab "T"	Walls "W"	aa Spacing	aa Length	bb Spacing	bb Length	cc Number ✦	dd Bar Size	dd Spacing	dd Length	dd A	dd B	dd C	dd D	ee Bar Size	ee Spacing	ee Length	ff Bar Size	ff Spacing	ff Length	gg Number ✦	hh Bar Size	hh Spacing	hh Length	hh F
6'	3'	9½"	8"	12"	4'-4	12"	8'-9	88	5	14"	27'-3	4'-7	2'-7	6½"	3'-1	5	14"	14'-0	5	14"	26'-11	40	4	7"	5'-1	2'-5
	4'	9½"	8"	12"	5'-4	12"	10'-9	98	5	14"	27'-3	4'-7	2'-7	6½"	3'-1	5	14"	14'-0	5	14"	26'-11	40	4	7"	5'-7	2'-5
	5'	9½"	8"	12"	6'-4	12"	12'-9	98	5	14"	27'-3	4'-7	2'-7	6½"	3'-1	5	14"	14'-0	5	14"	26'-11	40	4	7"	6'-1	2'-5
	6'	9½"	8"	12"	7'-4	12"	14'-9	108	5	14"	27'-3	4'-7	2'-7	6½"	3'-1	5	14"	14'-0	5	14"	26'-11	40	4	7"	6'-7	2'-5
	7'	9½"	8"	12"	8'-4	12"	16'-9	118	5	13"	27'-3	4'-7	2'-7	6½"	3'-1	5	13"	14'-0	5	13"	26'-11	40	4	6½"	7'-1	2'-5
8'	3'	9½"	9"	12"	4'-4	12"	8'-9	88	6	14"	35'-7	6'-1	3'-8	6½"	4'-2	6	14"	18'-3	6	14"	35'-4	56	6	7"	5'-6	2'-6
	4'	9½'	9"	12"	5'-4	12"	10'-9	98	6	14"	35'-7	6'-1	3'-8	6½"	4'-2	6	14"	18'-3	6	14"	35'-4	56	6	7"	6'-0	2'-6
	5'	9½"	9"	12"	6'-4	12"	12'-9	98	6	14"	35'-7	6'-1	3'-8	6½"	4'-2	6	14"	18'-3	6	14"	35'-4	56	6	7"	6'-6	2'-6
	6'	9½"	9"	12"	7'-4	12"	14'-9	108	6	14"	35'-7	6'-1	3'-8	6½"	4'-2	6	14"	18'-3	6	14"	35'-4	56	6	7"	6'-11	2'-6
	7'	9½"	9"	12"	8'-4	12"	16'-9	118	6	13"	35'-7	6'-1	3'-8	6½"	4'-2	6	13"	18'-3	6	13"	35'-4	56	5	6½"	7'-5	2'-6
	8'	9½"	9"	12"	9'-4	12"	18'-9	118	6	13"	35'-7	6'-1	3'-8	6½"	4'-2	6	13"	18'-3	6	13"	35'-4	56	6	6½"	8'-0	2'-6
10'	3'	10½"	11"	12"	4'-6	12"	9'-2	88	7	17"	44'-2	7'-7	4'-8	7½"	5'-2	6	17"	22'-8	7	17"	44'-2	64	6	8½"	6'-1	3'-0
	4'	10½"	11"	12"	5'-6	12"	11'-2	98	7	17"	44'-2	7'-7	4'-8	7½"	5'-2	6	17"	22'-8	7	17"	44'-2	64	6	8½"	6'-7	3'-0
	5'	10½"	11"	12"	6'-6	12"	13'-2	98	6	12"	44'-2	7'-7	4'-8	7½"	5'-2	5	12"	22'-8	6	12"	44'-2	64	5	6"	6'-8	2'-8
	6'	10½"	11"	12"	7'-6	12"	15'-2	108	6	12"	44'-2	7'-7	4'-8	7½"	5'-2	5	12"	22'-8	6	12"	44'-2	64	5	6"	7'-2	2'-8
	7'	10½"	11"	12"	8'-6	12"	17'-2	118	7	15"	44'-2	7'-7	4'-8	7½"	5'-2	5	15"	22'-8	7	15"	44'-2	64	6	7½"	7'-9	2'-8
	8'	10½"	11"	12"	9'-6	12"	19'-2	118	7	15"	44'-2	7'-7	4'-8	7½"	5'-2	5	15"	22'-8	7	15"	44'-2	64	6	7½"	8'-3	2'-8
	9'	10½"	11"	12"	10'-6	12"	21'-2	128	7	15"	44'-2	7'-7	4'-8	7½"	5'-2	6	15"	22'-8	7	15"	44'-2	64	6	7½"	8'-9	2'-8
	10'	10½"	11"	12"	11'-6	12"	23'-2	138	7	14"	44'-2	7'-7	4'-8	7½"	5'-2	5	14"	22'-8	7	14"	44'-2	64	6	7"	9'-3	2'-8
12'	8'	12½"	13"	12"	9'-10	12"	20'-0	118	7	13"	53'-0	9'-1	5'-6	9½"	6'-2	5	13"	27'-0	7	13"	53'-0	88	6	6½"	8'-7	2'-10
	9'	12½"	13"	12"	10'-10	12"	22'-0	128	8	16"	53'-0	9'-1	5'-6	9½"	6'-2	5	16"	27'-0	8	16"	53'-0	88	6	8"	9'-1	2'-10
	10'	12½"	13"	12"	11'-10	12"	24'-0	138	8	16"	53'-0	9'-1	5'-6	9½"	6'-2	5	16"	27'-0	8	16"	53'-0	88	6	8"	9'-7	2'-10
	11'	12½"	13"	12"	12'-10	12"	26'-0	138	7	12"	53'-0	9'-1	5'-6	9½"	6'-2	4	12"	27'-0	7	12"	53'-0	88	6	6"	10'-1	2'-10
	12'	12½"	13"	12"	13'-10	12"	28'-0	148	7	12"	53'-0	9'-1	5'-6	9½"	6'-2	5	12"	27'-0	7	12"	53'-0	88	6	6"	10'-7	2'-10

✦ Total number of bars in the cross-section.

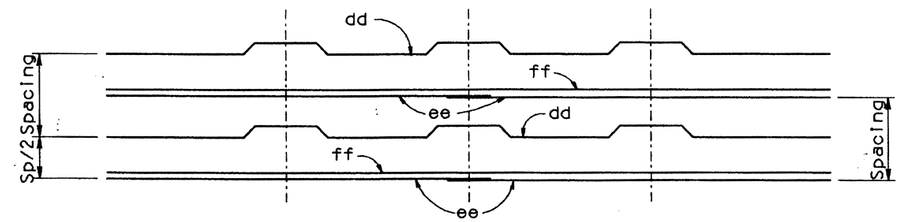

REINFORCING BAR PLACING DIAGRAM

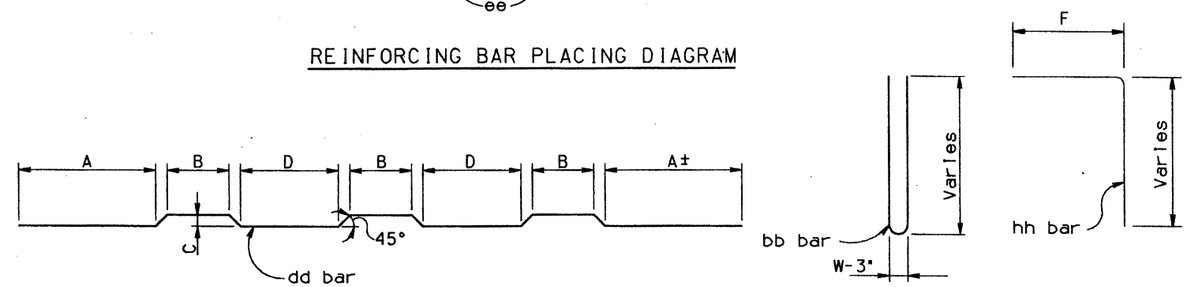

BENDS

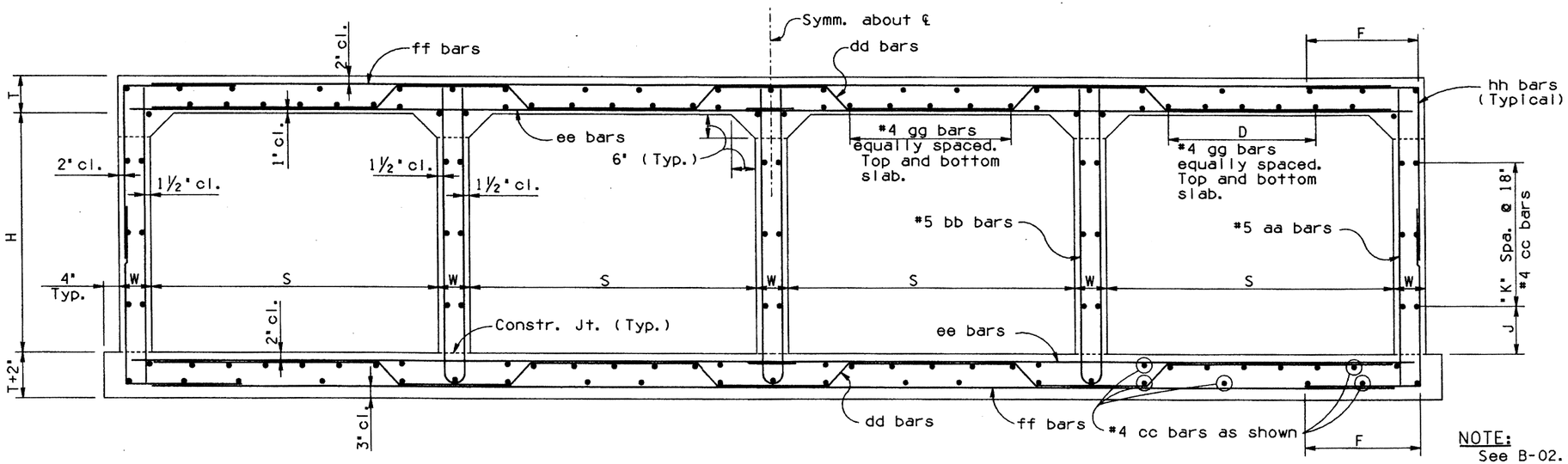

Height "H"	"J" Dim.	"K" Spaces
3'	9"	1
4'	3"	2
5'	12"	2
6'	9"	3
7'	3"	4
8'	12"	4
9'	9"	5
10'	3"	6
11	12"	6
12'	9"	7

TYPICAL SECTION

NOTE:
See B-02.45 for Tables II thru V.
See B-01.10 for General Notes and Miscellaneous Details.
See B-02.70 for Quantities.

NO.	DESCRIPTION OF REVISIONS	MADE BY	DATE
1	Total Redesign of Box	J.W.	6-88
2			
3			
4			

DESIGN
DRAWN
CHECKED

CADD FILENAME= ZFA
VIEW NAME=

Registered Professional Engineer (Civil) CERTIFICATE NO. 9910 P. DANIEL DAVIS Date Signed 6-1-88 Arizona U.S.A.

DESIGN APPROVED J.D. Davis

APPROVED FOR DISTRIBUTION T.A. Bryant, II.

ARIZONA
DEPARTMENT OF TRANSPORTATION
HIGHWAYS DIVISION
STANDARD DRAWINGS

FOUR BARREL
BOX CULVERT

REVISION 7-88

STANDARD NO. B-02.40

TABLE II
10'-15' FILL

Span 'S'	Height 'H'	Top Slab 'T'	Walls 'W'	aa Spacing	aa Length	bb Spacing	bb Length	cc Number ✦	dd Bar Size	dd Spacing	dd Length	dd A	dd B	dd C	dd D	ee Bar Size	ee Spacing	ee Length	ff Bar Size	ff Spacing	ff Length	gg Number ✦	hh Bar Size	hh Spacing	hh Length	hh F
6'	3'	8"	8"	12"	4'-1	12"	8'-0	88	5	14"	26'-11	4'-7	2'-10	5"	3'-1	5	14"	14'-0	5	14"	26'-11	32	4	7"	5'-0	2'-5
	4'	8"	8"	12"	5'-1	12"	10'-0	98	5	14"	26'-11	4'-7	2'-10	5"	3'-1	5	14"	14'-0	5	14"	26'-11	32	4	7"	5'-6	2'-5
	5'	8"	8"	12"	6'-1	12"	12'-0	98	5	14"	26'-11	4'-7	2'-10	5"	3'-1	5	14"	14'-0	5	14"	26'-11	32	4	7"	6'-0	2'-5
	6'	8"	8"	12"	7'-1	12"	14'-0	108	5	14"	26'-11	4'-7	2'-10	5"	3'-1	5	14"	14'-0	5	14"	26'-11	32	4	7"	6'-6	2'-5
	7'	8"	8"	12"	8'-1	12"	16'-0	118	5	14"	26'-11	4'-7	2'-10	5"	3'-1	5	14"	14'-0	5	14"	26'-11	32	4	7"	7'-0	2'-5
8'	3'	10½"	9"	12"	4'-6	12"	9'-2	88	6	13"	35'-9	6'-1	3'-6	7½"	4'-2	5	13"	18'-3	6	13"	35'-4	40	4	6½"	5'-3	2'-6
	4'	10½"	9"	12"	5'-6	12"	11'-2	98	6	13"	35'-9	6'-1	3'-6	7½"	4'-2	4	13"	18'-3	6	13"	35'-4	40	4	6½"	5'-9	2'-6
	5'	10½"	9"	12"	6'-6	12"	13'-2	98	6	13"	35'-9	6'-1	3'-6	7½"	4'-2	4	13"	18'-3	6	13"	35'-4	40	4	6½"	6'-3	2'-6
	6'	10½"	9"	12"	7'-6	12"	15'-2	108	6	13"	35'-9	6'-1	3'-6	7½"	4'-2	4	13"	18'-3	6	13"	35'-4	40	4	6½"	6'-9	2'-6
	7'	10½"	9"	12"	8'-6	12"	17'-2	118	6	13"	35'-9	6'-1	3'-6	7½"	4'-2	4	13"	18'-3	6	13"	35'-4	40	4	6½"	7'-3	2'-6
	8'	10½"	9"	12"	9'-6	12"	19'-2	118	6	12"	35'-9	6'-1	3'-6	7½"	4'-2	4	12"	18'-3	6	12"	35'-4	40	4	6"	7'-9	2'-6
10'	3'	12½"	11"	12"	4'-10	12"	9'-8	88	7	14"	44'-7	7'-7	4'-4	9½"	5'-2	4	14"	22'-8	7	14"	44'-2	48	5	7"	5'-10	2'-8
	4'	12½"	11"	12"	5'-10	12"	11'-8	98	7	13"	44'-7	7'-7	4'-4	9½"	5'-2	4	13"	22'-8	7	13"	44'-2	48	4	6½"	6'-1	2'-8
	5'	12½"	11"	12"	6'-10	12"	13'-8	98	7	14"	44'-7	7'-7	4'-4	9½"	5'-2	4	14"	22'-8	7	14"	44'-2	48	5	7"	6'-10	2'-8
	6'	12½"	11"	12"	7'-10	12"	15'-8	108	7	13"	44'-7	7'-7	4'-4	9½"	5'-2	4	13"	22'-8	7	13"	44'-2	48	5	6½"	7'-4	2'-8
	7'	12½"	11"	12"	8'-10	12"	17'-8	118	7	13"	44'-7	7'-7	4'-4	9½"	5'-2	4	13"	22'-8	7	13"	44'-2	48	5	6½"	7'-10	2'-8
	8'	12½"	11"	12"	9'-10	12"	19'-8	118	7	13"	44'-7	7'-7	4'-4	9½"	5'-2	4	13"	22'-8	7	13"	44'-2	48	5	6½"	8'-4	2'-8
	9'	12½"	11"	12"	10'-10	12"	21'-8	128	7	13"	44'-7	7'-7	4'-4	9½"	5'-2	4	13"	22'-8	7	13"	44'-2	48	5	6½"	8'-10	2'-8
	10'	12½"	11"	12"	11'-10	12"	23'-8	138	7	13"	44'-7	7'-7	4'-4	9½"	5'-2	4	13"	22'-8	7	13"	44'-2	48	5	6½"	9'-4	2'-8
12'	8'	15"	13"	12"	10'-3	12"	20'-6	118	8	15"	53'-6	9'-1	5'-1	12"	6'-2	4	15"	27'-0	8	15"	53'-0	56	6	7½"	8'-10	2'-11
	9'	15"	13"	12"	11'-3	12"	22'-6	128	8	15"	53'-6	9'-1	5'-1	12"	6'-2	4	15"	27'-0	8	15"	53'-0	56	6	7½"	9'-4	2'-11
	10'	15"	13"	12"	12'-3	12"	24'-6	138	8	15"	53'-6	9'-1	5'-1	12"	6'-2	5	15"	27'-0	8	15"	53'-0	56	6	7½"	9'-10	2'-11
	11'	15"	13"	12"	13'-3	12"	26'-6	138	8	14"	53'-6	9'-1	5'-1	12"	6'-2	4	14"	27'-0	8	14"	53'-0	56	5	7"	10'-9	3'-5
	12'	15"	13"	12"	14'-3	12"	28'-6	148	8	14"	53'-6	9'-1	5'-1	12"	6'-2	5	14"	27'-0	8	14"	53'-0	56	6	7"	11'-2	3'-5

TABLE III
15'-20' FILL

Span 'S'	Height 'H'	Top Slab 'T'	Walls 'W'	aa Spacing	aa Length	bb Spacing	bb Length	cc Number ✦	dd Bar Size	dd Spacing	dd Length	dd A	dd B	dd C	dd D	ee Bar Size	ee Spacing	ee Length	ff Bar Size	ff Spacing	ff Length	gg Number ✦	hh Bar Size	hh Spacing	hh Length	hh F
6'	3'	9½"	8"	12"	4'-4	12"	8'-9	88	5	13"	27'-3	4'-7	2'-7	6½"	3'-1	5	13"	14'-0	5	13"	26'-11	32	4	6½"	5'-1	2'-5
	4'	9½"	8"	12"	5'-4	12"	10'-9	98	5	13"	27'-3	4'-7	2'-7	6½"	3'-1	5	13"	14'-0	5	13"	26'-11	32	4	6½"	5'-7	2'-5
	5'	9½"	8"	12"	6'-4	12"	12'-9	98	5	13"	27'-3	4'-7	2'-7	6½"	3'-1	5	13"	14'-0	5	13"	26'-11	32	4	6½"	6'-1	2'-5
	6'	9½"	8"	12"	7'-4	12"	14'-9	108	5	13"	27'-3	4'-7	2'-7	6½"	3'-1	5	13"	14'-0	5	13"	26'-11	32	4	6½"	6'-7	2'-5
	7'	9½"	8"	12"	8'-4	12"	16'-9	118	5	13"	27'-3	4'-7	2'-7	6½"	3'-1	5	13"	14'-0	5	13"	26'-11	32	4	6½"	7'-1	2'-5
8'	3'	12"	9"	12"	4'-9	12"	9'-8	88	6	12"	36'-1	6'-1	3'-3	9"	4'-2	4	12"	18'-3	6	12"	35'-4	40	4	6"	5'-5	2'-6
	4'	12"	9"	12"	5'-9	12"	11'-8	98	6	12"	36'-1	6'-1	3'-3	9"	4'-2	4	12"	18'-3	6	12"	35'-4	40	4	6"	5'-11	2'-6
	5'	12"	9"	12"	6'-9	12"	13'-8	98	6	12"	36'-1	6'-1	3'-3	9"	4'-2	4	12"	18'-3	6	12"	35'-4	40	4	6"	6'-5	2'-6
	6'	12"	9"	12"	7'-9	12"	15'-8	108	6	12"	36'-1	6'-1	3'-3	9"	4'-2	4	12"	18'-3	6	12"	35'-4	40	4	6"	6'-11	2'-6
	7'	12"	9"	12"	8'-9	12"	17'-8	118	6	12"	36'-1	6'-1	3'-3	9"	4'-2	4	12"	18'-3	6	12"	35'-4	40	4	6"	7'-5	2'-6
	8'	12"	9"	12"	9'-9	12"	19'-8	118	6	12"	36'-1	6'-1	3'-3	9"	4'-2	4	12"	18'-3	6	12"	35'-4	40	4	6"	7'-11	2'-6
10'	3'	15"	11"	12"	5'-3	12"	10'-8	88	7	13"	45'-1	7'-7	3'-11	1'-0	5'-2	4	13"	22'-8	7	13"	44'-2	48	5	6½"	6'-0	2'-8
	4'	15"	11"	12"	6'-3	12"	12'-8	98	7	13"	45'-1	7'-7	3'-11	1'-0	5'-2	4	13"	22'-8	7	13"	44'-2	48	5	6½"	6'-6	2'-8
	5'	15"	11"	12"	7'-3	12"	14'-8	98	7	13"	45'-1	7'-7	3'-11	1'-0	5'-2	4	13"	22'-8	7	13"	44'-2	48	5	6½"	7'-0	2'-8
	6'	15"	11"	12"	8'-3	12"	16'-8	108	7	13"	45'-1	7'-7	3'-11	1'-0	5'-2	4	13"	22'-8	7	13"	44'-2	48	5	6½"	7'-6	2'-8
	7'	15"	11"	12"	9'-3	12"	18'-8	118	7	13"	45'-1	7'-7	3'-11	1'-0	5'-2	4	13"	22'-8	7	13"	44'-2	48	5	6½"	8'-0	2'-8
	8'	15"	11"	12"	10'-3	12"	20'-8	118	7	13"	45'-1	7'-7	3'-11	1'-0	5'-2	4	13"	22'-8	7	13"	44'-2	48	5	6½"	8'-6	2'-8
	9'	15"	11"	12"	11'-3	12"	22'-8	128	7	13"	45'-1	7'-7	3'-11	1'-0	5'-2	4	13"	22'-8	7	13"	44'-2	48	5	6½"	9'-0	2'-8
	10'	15"	11"	12"	12'-3	12"	24'-8	138	7	13"	45'-1	7'-7	3'-11	1'-0	5'-2	4	13"	22'-8	7	13"	44'-2	48	5	6½"	9'-7	2'-9
12'	8'	18"	13"	12"	10'-9	12"	21'-6	118	8	14"	54'-2	9'-1	4'-7	1'-3	6'-2	4	14"	27'-0	8	14"	53'-0	56	5	7"	9'-6	3'-5
	9'	18"	13"	12"	11'-9	12"	23'-6	128	8	14"	54'-2	9'-1	4'-7	1'-3	6'-2	4	14"	27'-0	8	14"	53'-0	56	5	7"	10'-0	3'-5
	10'	18"	13"	12"	12'-9	12"	25'-6	138	8	14"	54'-2	9'-1	4'-7	1'-3	6'-2	4	14"	27'-0	8	14"	53'-0	56	6	7"	10'-6	3'-5
	11'	18"	13"	12"	13'-9	12"	27'-6	138	8	14"	54'-2	9'-1	4'-7	1'-3	6'-2	5	14"	27'-0	8	14"	53'-0	56	6	7"	11'-0	3'-5
	12'	18"	13"	12"	14'-9	12"	29'-6	148	8	14"	54'-2	9'-1	4'-7	1'-3	6'-2	5	14"	27'-0	8	14"	53'-0	56	6	7"	11'-6	3'-5

TABLE IV
20'-25' FILL

Span 'S'	Height 'H'	Top Slab 'T'	Walls 'W'	aa Spacing	aa Length	bb Spacing	bb Length	cc Number ✦	dd Bar Size	dd Spacing	dd Length	dd A	dd B	dd C	dd D	ee Bar Size	ee Spacing	ee Length	ff Bar Size	ff Spacing	ff Length	gg Number ✦	hh Bar Size	hh Spacing	hh Length	hh F
6'	3'	11"	8"	12"	4'-7	12"	9'-2	88	5	12"	27'-7	4'-7	2'-4	8"	3'-1	5	12"	14'-0	5	12"	26'-11	32	4	6"	5'-3	2'-5
	4'	11"	8"	12"	5'-7	12"	11'-2	98	5	12"	27'-7	4'-7	2'-4	8"	3'-1	5	12"	14'-0	5	12"	26'-11	32	4	6"	5'-9	2'-5
	5'	11"	8"	12"	6'-7	12"	13'-2	98	5	12"	27'-7	4'-7	2'-4	8"	3'-1	5	12"	14'-0	5	12"	26'-11	32	4	6"	6'-3	2'-5
	6'	11"	8"	12"	7'-7	12"	15'-2	108	5	12"	27'-7	4'-7	2'-4	8"	3'-1	5	12"	14'-0	5	12"	26'-11	32	4	6"	6'-9	2'-5
	7'	11"	8"	12"	8'-7	12"	17'-2	118	5	12"	27'-7	4'-7	2'-4	8"	3'-1	5	12"	14'-0	5	12"	26'-11	32	4	6"	7'-3	2'-5
8'	3'	14"	9"	12"	5'-1	12"	10'-2	88	6	12"	36'-6	6'-1	2'-11	11"	4'-2	4	12"	18'-3	6	12"	35'-4	40	4	6"	5'-7	2'-6
	4'	14"	9"	12"	6'-1	12"	12'-2	98	6	12"	36'-6	6'-1	2'-11	11"	4'-2	4	12"	18'-3	6	12"	35'-4	40	4	6"	6'-1	2'-6
	5'	14"	9"	12"	7'-1	12"	14'-2	98	6	12"	36'-6	6'-1	2'-11	11"	4'-2	4	12"	18'-3	6	12"	35'-4	40	4	6"	6'-7	2'-6
	6'	14"	9"	12"	8'-1	12"	16'-2	108	6	12"	36'-6	6'-1	2'-11	11"	4'-2	4	12"	18'-3	6	12"	35'-4	40	4	6"	7'-1	2'-6
	7'	14"	9"	12"	9'-1	12"	18'-2	118	6	12"	36'-6	6'-1	2'-11	11"	4'-2	4	12"	18'-3	6	12"	35'-4	40	4	6"	7'-7	2'-6
	8'	14"	9"	12"	10'-1	12"	20'-2	118	6	12"	36'-6	6'-1	2'-11	11"	4'-2	4	12"	18'-3	6	12"	35'-4	40	4	6"	8'-1	2'-6
10'	3'	17"	11"	12"	5'-7	12"	11'-2	88	7	13"	45'-6	7'-7	3'-7	1'-2	5'-2	4	13"	22'-8	7	13"	44'-2	48	5	6½"	6'-3	2'-9
	4'	17"	11"	12"	6'-7	12"	13'-2	98	7	13"	45'-6	7'-7	3'-7	1'-2	5'-2	4	13"	22'-8	7	13"	44'-2	48	5	6½"	6'-9	2'-9
	5'	17"	11"	12"	7'-7	12"	15'-2	98	7	13"	45'-6	7'-7	3'-7	1'-2	5'-2	4	13"	22'-8	7	13"	44'-2	48	5	6½"	7'-3	2'-9
	6'	17"	11"	12"	8'-7	12"	17'-2	108	7	13"	45'-6	7'-7	3'-7	1'-2	5'-2	4	13"	22'-8	7	13"	44'-2	48	5	6½"	7'-9	2'-9
	7'	17"	11"	12"	9'-7	12"	19'-2	118	7	13"	45'-6	7'-7	3'-7	1'-2	5'-2	4	13"	22'-8	7	13"	44'-2	48	5	6½"	8'-3	2'-9
	8'	17"	11"	12"	10'-7	12"	21'-2	118	7	13"	45'-6	7'-7	3'-7	1'-2	5'-2	4	13"	22'-8	7	13"	44'-2	48	5	6½"	8'-9	2'-9
	9'	17"	11"	12"	11'-7	12"	23'-2	128	7	13"	45'-6	7'-7	3'-7	1'-2	5'-2	4	13"	22'-8	7	13"	44'-2	48	5	6½"	9'-3	2'-9
	10'	17"	11"	12"	12'-7	12"	25'-2	138	7	13"	45'-6	7'-7	3'-7	1'-2	5'-2	4	13"	22'-8	7	13"	44'-2	48	5	6½"	9'-9	2'-9
12'	8'	20½"	13"	12"	11'-2	12"	22'-6	118	8	14"	54'-8	9'-1	4'-2	1'-5½	6'-2	5	14"	27'-0	8	14"	53'-0	56	6	7"	9'-4	2'-11
	9'	20½"	13"	12"	12'-2	12"	24'-6	128	8	14"	54'-8	9'-1	4'-2	1'-5½	6'-2	5	14"	27'-0	8	14"	53'-0	56	6	7"	9'-10	2'-11
	10'	20½"	13"	12"	13'-2	12"	26'-6	138	8	14"	54'-8	9'-1	4'-2	1'-5½	6'-2	5	14"	27'-0	8	14"	53'-0	56	6	7"	10'-4	2'-11
	11'	20½"	13"	12"	14'-2	12"	28'-6	138	8	14"	54'-8	9'-1	4'-2	1'-5½	6'-2	5	14"	27'-0	8	14"	53'-0	56	6	7"	11'-4	3'-5
	12'	20½"	13"	12"	15'-2	12"	30'-6	148	8	13"	54'-8	9'-1	4'-2	1'-5½	6'-2	5	13"	27'-0	8	13"	53'-0	56	5	6½"	11'-9	3'-5

TABLE V
25'-30' FILL

Span 'S'	Height 'H'	Top Slab 'T'	Walls 'W'	aa Spacing	aa Length	bb Spacing	bb Length	cc Number ✦	dd Bar Size	dd Spacing	dd Length	dd A	dd B	dd C	dd D	ee Bar Size	ee Spacing	ee Length	ff Bar Size	ff Spacing	ff Length	gg Number ✦	hh Bar Size	hh Spacing	hh Length	hh F
6'	3'	12½"	8"	12"	4'-8	12"	9'-10	88	6	16"	27'-9	4'-7	2'-1	9½"	3'-1	6	16"	14'-0	6	16"	26'-11	32	4	8"	5'-4	2'-5
	4'	12½"	8"	12"	5'-8	12"	11'-10	98	6	16"	27'-9	4'-7	2'-1	9½"	3'-1	6	16"	14'-0	6	16"	26'-11	32	4	8"	5'-10	2'-5
	5'	12½"	8"	12"	6'-8	12"	13'-10	98	6	16"	27'-9	4'-7	2'-1	9½"	3'-1	6	16"	14'-0	6	16"	26'-11	32	4	8"	6'-4	2'-5
	6'	12½"	8"	12"	7'-8	12"	15'-10	108	5	12"	27'-9	4'-7	2'-1	9½"	3'-1	5	12"	14'-0	5	12"	26'-11	32	4	6"	6'-10	2'-5
	7'	12½"	8"	12"	8'-8	12"	17'-10	118	5	12"	27'-9	4'-7	2'-1	9½"	3'-1	5	12"	14'-0	5	12"	26'-11	32	4	6"	7'-4	2'-5
8'	3'	16"	9"	12"	5'-5	12"	11'-1	88	7	16"	36'-10	6'-1	2'-7	1'-1	4'-2	4	16"	18'-3	7	16"	35'-4	40	5	8"	6'-0	2'-7
	4'	16"	9"	12"	6'-5	12"	13'-1	98	7	16"	36'-10	6'-1	2'-7	1'-1	4'-2	4	16"	18'-3	7	16"	35'-4	40	5	8"	6'-6	2'-7
	5'	16"	9"	12"	7'-5	12"	15'-1	98	6	12"	36'-10	6'-1	2'-7	1'-1	4'-2	4	12"	18'-3	6	12"	35'-4	40	4	6"	6'-9	2'-6
	6'	16"	9"	12"	8'-5	12"	17'-1	108	6	12"	36'-10	6'-1	2'-7	1'-1	4'-2	4	12"	18'-3	6	12"	35'-4	40	4	6"	7'-3	2'-6
	7'	16"	9"	12"	9'-5	12"	19'-1	118	6	12"	36'-10	6'-1	2'-7	1'-1	4'-2	4	12"	18'-3	6	12"	35'-4	40	4	6"	7'-9	2'-6
	8'	16"	9"	12"	10'-5	12"	21'-1	118	6	12"	36'-10	6'-1	2'-7	1'-1	4'-2	4	12"	18'-3	6	12"	35'-4	40	4	6"	8'-3	2'-6
10'	3'	19"	11"	12"	5'-11	12"	11'-9	88	7	12"	45'-11	7'-7	3'-3	1'-4	5'-2	4	12"	22'-8	7	12"	44'-2	48	5	6"	6'-4	2'-9
	4'	19"	11"	12"	6'-11	12"	13'-9	98	7	12"	45'-11	7'-7	3'-3	1'-4	5'-2	4	12"	22'-8	7	12"	44'-2	48	5	6"	6'-10	2'-9
	5'	19"	11"	12"	7'-11	12"	15'-9	98	7	12"	45'-11	7'-7	3'-3	1'-4	5'-2	4	12"	22'-8	7	12"	44'-2	48	5	6"	7'-4	2'-9
	6'	19"	11"	12"	8'-11	12"	17'-9	108	7	12"	45'-11	7'-7	3'-3	1'-4	5'-2	4	12"	22'-8	7	12"	44'-2	48	5	6"	7'-10	2'-9
	7'	19"	11"	12"	9'-11	12"	19'-9	118	7	12"	45'-11	7'-7	3'-3	1'-4	5'-2	4	12"	22'-8	7	12"	44'-2	48	5	6"	8'-4	2'-9
	8'	19"	11"	12"	10'-11	12"	21'-9	118	7	12"	45'-11	7'-7	3'-3	1'-4	5'-2	4	12'	22'-8	7	12'	44'-2	48	5	6"	8'-10	2'-9
	9'	19"	11"	12"	11'-11	12"	23'-9	128	7	12"	45'-11	7'-7	3'-3	1'-4	5'-2	4	12"	22'-8	7	12"	44'-2	48	5	6"	9'-4	2'-9
	10'	19"	11"	11½"	12'-11	12"	25'-9	138	7	12"	45'-11	7'-7	3'-3	1'-4	5'-2	4	12"	22'-8	7	12"	44'-2	48	5	6"	9'-10	2'-9
12'	8'	23"	13"	12"	11'-7	12"	23'-0	118	8	14"	55'-2	9'-1	3'-9	1'-8	6'-2	5	14"	27'-0	8	14"	53'-0	56	6	7"	10'-0	3'-5
	9'	23"	13"	12"	12'-7	12"	25'-0	128	8	14"	55'-2	9'-1	3'-9	1'-8	6'-2	5	14"	27'-0	8	14"	53'-0	56	6	7"	10'-6	3'-5
	10'	23"	13"	12"	13'-7	12"	27'-0	138	8	14"	55'-2	9'-1	3'-9	1'-8	6'-2	5	14"	27'-0	8	14"	53'-0	56	6	7"	11'-0	3'-5
	11'	23"	13"	12"	14'-7	12"	29'-0	138	8	14"	55'-2	9'-1	3'-9	1'-8	6'-2	5	14"	27'-0	8	14"	53'-0	56	6	7"	11'-6	3'-5
	12'	23"	13"	9½"	15'-7	12"	31'-0	148	8	14"	55'-2	9'-1	3'-9	1'-8	6'-2	6	14"	27'-0	8	14"	53'-0	56	6	7"	12'-0	3'-5

✦ Total number of bars in the cross-section.

NO	DESCRIPTION OF REVISIONS	MADE BY	DATE
1	Total Redesign of Box	J.M.	6-88
2			
3			
4			

DESIGN
DRAWN
CHECKED

CADD FILENAME= ZFA
VIEW NAME=

Registered Professional Engineer (Civil) CERTIFICATE NO. 9910 F. DANIEL DAVIS Arizona U.S.A.

DESIGN APPROVED
F. D. Davis

APPROVED FOR DISTRIBUTION
T. A. Bryant, II.

ARIZONA
DEPARTMENT OF TRANSPORTATION
HIGHWAYS DIVISION
STANDARD DRAWINGS

FOUR BARREL
BOX CULVERT

REVISION
7-88

STANDARD NO.
B-02.45

TABLE I
0'-10' FILL

Span "S"	Height "H"	Top Slab "T"	Walls "W"	aa Spacing	aa Length	bb Spacing	bb Length	cc ✦ Number	dd Bar Size	dd Spacing	dd Length	dd A	dd B	dd C	dd D	dd E	ee & eel Bar Size	ee & eel Spacing	ee Length	eel Length	ff Bar Size	ff Spacing	ff Length	gg ✦ Number	hh Bar Size	hh Spacing	hh Length	hh F
6'	3'	9½"	8"	12"	4'-4	12"	8'-9	108	5	14"	17'-9	4'-7	2'-7	6½"	3'-1	2'-2	5	14"	20'-9	14'-1	5	14"	17'-6	40	4	7"	5'-1	2'-5
	4'	9½"	8"	12"	5'-4	12"	10'-9	120	5	14"	17'-9	4'-7	2'-7	6½"	3'-1	2'-2	5	14"	20'-9	14'-1	5	14"	17'-6	40	4	7"	5'-7	2'-5
	5'	9½"	8"	12"	6'-4	12"	12'-9	120	5	14"	17'-9	4'-7	2'-7	6½"	3'-1	2'-2	5	14"	20'-9	14'-1	5	14"	17'-6	40	4	7"	6'-1	2'-5
	6'	9½"	8"	12"	7'-4	12"	14'-9	132	5	14"	17'-9	4'-7	2'-7	6½"	3'-1	2'-2	5	14"	20'-9	14'-1	5	14"	17'-6	40	4	7"	6'-7	2'-5
	7'	9½"	8"	12"	8'-4	12"	16'-9	144	5	13"	17'-9	4'-7	2'-7	6½"	3'-1	2'-2	5	13"	20'-9	14'-1	5	13"	17'-6	40	4	6½"	7'-1	2'-5
8'	3'	9½"	9"	12"	4'-4	12"	8'-9	108	6	14"	23'-2	6'-1	3'-8	6½"	4'-2	2'-10	6	14"	27'-0	18'-3	6	14"	22'-9	60	6	7"	5'-6	2'-6
	4'	9½"	9"	12"	5'-4	12"	10'-9	120	6	14"	23'-2	6'-1	3'-8	6½"	4'-2	2'-10	6	14"	27'-0	18'-3	6	14"	22'-9	60	6	7"	6'-0	2'-6
	5'	9½"	9"	12"	6'-4	12"	12'-9	120	6	14"	23'-2	6'-1	3'-8	6½"	4'-2	2'-10	6	14"	27'-0	18'-3	6	14"	22'-9	60	6	7"	6'-6	2'-6
	6'	9½"	9"	12"	7'-4	12"	14'-9	132	6	14"	23'-2	6'-1	3'-8	6½"	4'-2	2'-10	6	14"	27'-0	18'-3	6	14"	22'-9	60	6	7"	7'-0	2'-6
	7'	9½"	9"	12"	8'-4	12"	16'-9	144	6	13"	23'-2	6'-1	3'-8	6½"	4'-2	2'-10	6	13"	27'-0	18'-3	6	13"	22'-9	60	5	6½"	7'-6	2'-6
	8'	9½"	9"	12"	9'-4	12"	18'-9	144	6	13"	23'-2	6'-1	3'-8	6½"	4'-2	2'-10	6	13"	27'-0	18'-3	6	13"	22'-9	60	6	6½"	8'-0	2'-6
10'	3'	10½"	11"	12"	4'-6	12"	9'-2	108	7	17"	28'-8	7'-7	4'-8	7½"	5'-2	3'-6	6	17"	33'-6	22'-7	7	17"	28'-8	100	6	8½"	6'-1	3'-0
	4'	10½"	11"	12"	5'-6	12"	11'-2	120	7	17"	28'-8	7'-7	4'-8	7½"	5'-2	3'-6	6	17"	33'-6	22'-7	7	17"	28'-8	100	6	8½"	6'-7	3'-0
	5'	10½"	11"	12"	6'-6	12"	13'-2	120	6	12"	28'-8	7'-7	4'-8	7½"	5'-2	3'-6	5	12"	33'-6	22'-7	6	12"	28'-8	100	5	6"	6'-8	2'-8
	6'	10½"	11"	12"	7'-6	12"	15'-2	132	6	12"	28'-8	7'-7	4'-8	7½"	5'-2	3'-6	5	12"	33'-6	22'-7	6	12"	28'-8	100	5	6"	7'-2	2'-8
	7'	10½"	11"	12"	8'-6	12"	17'-2	144	7	15"	28'-8	7'-7	4'-8	7½"	5'-2	3'-6	5	15"	33'-6	22'-7	7	15"	28'-8	100	6	7½"	7'-9	2'-8
	8'	10½"	11"	12"	9'-6	12"	19'-2	144	7	15"	28'-8	7'-7	4'-8	7½"	5'-2	3'-6	5	15"	33'-6	22'-7	7	15"	28'-8	100	6	7½"	8'-3	2'-8
	9'	10½"	11"	12"	10'-6	12"	21'-2	156	7	15"	28'-8	7'-7	4'-8	7½"	5'-2	3'-6	6	15"	33'-6	22'-7	7	15"	28'-8	100	6	7½"	8'-9	2'-8
	10'	10½"	11"	12"	11'-6	12"	23'-2	168	7	14"	28'-8	7'-7	4'-8	7½"	5'-2	3'-6	5	14"	33'-6	22'-7	7	14"	28'-8	100	6	7"	9'-3	2'-8
12'	8'	12½"	13"	12"	9'-10	12"	20'-0	144	7	13"	34'-4	9'-1	5'-6	9½"	6'-2	4'-1	5	13"	40'-0	27'-0	7	13"	34'-4	130	6	6½"	8'-7	2'-10
	9'	12½"	13"	12"	10'-10	12"	22'-0	156	8	16"	34'-4	9'-1	5'-6	9½"	6'-2	4'-1	5	16"	40'-0	27'-0	8	16"	34'-4	130	6	8"	9'-1	2'-10
	10'	12½"	13"	12"	11'-10	12"	24'-0	168	8	16"	34'-4	9'-1	5'-6	9½"	6'-2	4'-1	5	16"	40'-0	27'-0	8	16"	34'-4	130	6	8"	9'-7	2'-10
	11'	12½"	13"	12"	12'-10	12"	26'-0	168	7	12"	34'-4	9'-1	5'-6	9½"	6'-2	4'-1	4	12"	40'-0	27'-0	7	12"	34'-4	130	6	6"	10'-1	2'-10
	12'	12½"	13"	12"	13'-10	12"	28'-0	180	7	12"	34'-4	9'-1	5'-6	9½"	6'-2	4'-1	5	12"	40'-0	27'-0	7	12	34'-4	130	6	6"	10'-7	2'-10

✦Total number of bars in the cross-section.

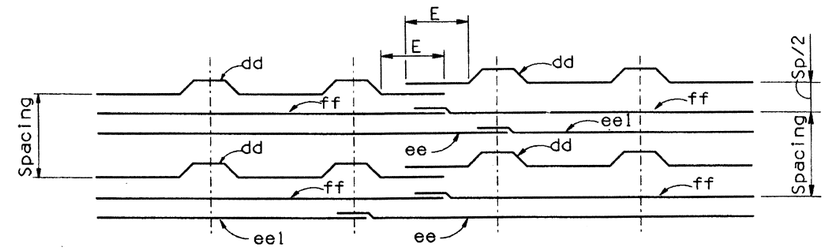

REINFORCING BAR PLACING DIAGRAM

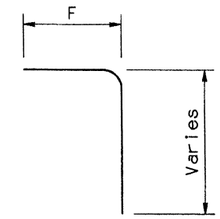

hh bar

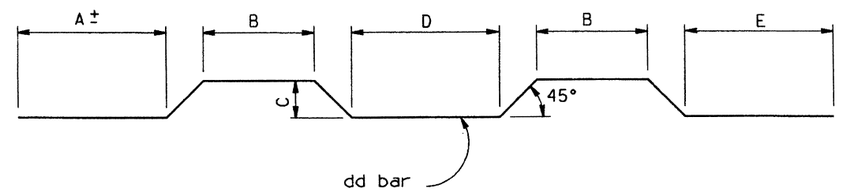

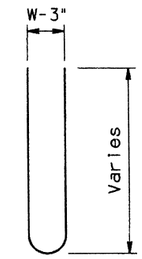

bb bar

BENDS

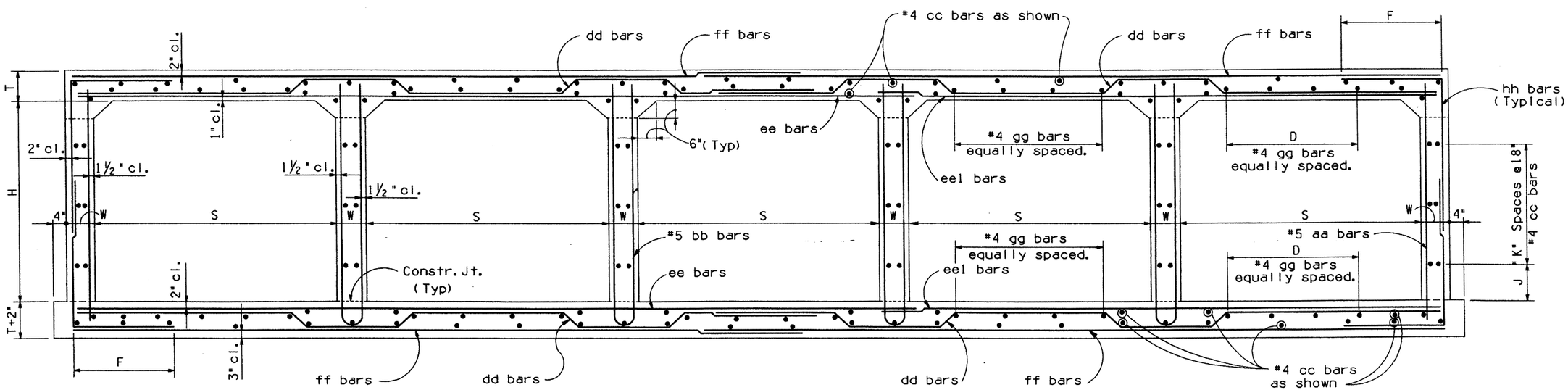

TYPICAL SECTION

Height "H"	"J" Dim.	"K" Spaces
3'	9"	1
4'	3"	2
5'	12"	2
6'	9"	3
7'	3"	4
8'	12"	4
9'	9"	5
10'	3"	6
11'	12"	6
12'	9"	7

NOTE:
See B-02.55 for Tables II thru V.
See B-01.10 for General Notes and Miscellaneous Details.
See B-02.70 for Quantities.

NOTE:
Reinforcing shown is for placement location only.
Use the appropiate table to determine the reinforcing requirements.

NO	DESCRIPTION OF REVISIONS	MADE BY	DATE
1	Total Redesign of Box	C.H.	6-88
2	Clarified bars callout	C.H.	4-92
3			
4			

DESIGN
DRAWN
CHECKED

CADD FILENAME= ZFA
VIEW NAME=

DESIGN APPROVED

APPROVED FOR DISTRIBUTION

ARIZONA
DEPARTMENT OF TRANSPORTATION
HIGHWAYS DIVISION
STANDARD DRAWINGS

FIVE BARREL
BOX CULVERT

REVISION 4-92

STANDARD NO. B-02.50

TABLE II
10' -15' FILL

Span "S"	Height "H"	Top Slab "T"	Walls "W"	aa Spacing	aa Length	bb Spacing	bb Length	cc ✦Number	dd Bar Size	dd Spacing	dd Length	dd A	dd B	dd C	dd D	dd E	ee & eel Bar Size	ee & eel Spacing	ee Length	eel Length	ff Bar Size	ff Spacing	ff Length	gg ✦Number	hh Bar Size	hh Spacing	hh Length	hh F
6'	3'	8"	8"	12"	4'-1	12"	8'-0	108	5	14"	17'-7	4'-7	2'-10	5"	3'-1	2'-2	5	14"	20'-9	14'-1	5	14"	17'-6	40	4	7"	5'-0	2'-5
	4'	8"	8"	12"	5'-1	12"	10'-0	120	5	14"	17'-7	4'-7	2'-10	5"	3'-1	2'-2	5	14"	20'-9	14'-1	5	14"	17'-6	40	4	7"	5'-6	2'-5
	5'	8"	8"	12"	6'-1	12"	12'-0	120	5	14"	17'-7	4'-7	2'-10	5"	3'-1	2'-2	5	14"	20'-9	14'-1	5	14'	17'-6	40	4	7"	6'-0	2'-5
	6'	8"	8"	12"	7'-1	12"	14'-0	132	5	14"	17'-7	4'-7	2'-10	5"	3'-1	2'-2	5	14"	20'-9	14'-1	5	14"	17'-6	40	4	7"	6'-6	2'-5
	7'	8"	8"	12"	8'-1	12"	16'-0	144	5	14"	17'-7	4'-7	2'-10	5"	3'-1	2'-2	5	14"	20'-9	14'-1	5	14"	17'-6	40	4	7"	7'-0	2'-5
8'	3'	10½"	9"	12"	4'-6	12"	9'-2	108	6	13"	23'-3	6'-1	3'-6	7½"	4'-2	2'-10	5	13"	27'-0	18'-3	6	13"	22'-9	50	4	6½"	5'-3	2'-6
	4'	10½"	9"	12"	5'-6	12"	11'-2	120	6	13"	23'-3	6'-1	3'-6	7½"	4'-2	2'-10	4	13"	27'-0	18'-3	6	13"	22'-9	50	4	6½"	5'-9	2'-6
	5'	10½"	9"	12"	6'-6	12"	13'-2	120	6	13"	23'-3	6'-1	3'-6	7½"	4'-2	2'-10	4	13"	27'-0	18'-3	6	13"	22'-9	50	4	6½"	6'-3	2'-6
	6'	10½"	9"	12"	7'-6	12"	15'-2	132	6	13"	23'-3	6'-1	3'-6	7½"	4'-2	2'-10	4	13"	27'-0	18'-3	6	13"	22'-9	50	4	6½"	6'-9	2'-6
	7'	10½"	9"	12"	8'-6	12"	17'-2	144	6	13"	23'-3	6'-1	3'-6	7½"	4'-2	2'-10	4	13"	27'-0	18'-3	6	13"	22'-9	50	4	6½"	7'-3	2'-6
	8'	10½"	9"	12"	9'-6	12"	19'-2	144	6	12"	23'-3	6'-1	3'-6	7½"	4'-2	2'-10	4	12"	27'-0	18'-3	6	12"	22'-9	50	4	6"	7'-9	2'-6
10'	3'	12½"	11"	12"	4'-10	12"	9'-8	108	7	14"	29'-0	7'-7	4'-4	9½"	5'-2	3'-6	4	14"	33'-6	22'-7	7	14"	28'-8	60	5	7"	5'-10	2'-8
	4'	12½"	11"	12"	5'-10	12"	11'-8	120	7	13"	29'-0	7'-7	4'-4	9½"	5'-2	3'-6	4	13"	33'-6	22'-7	7	13"	28'-8	60	4	6½"	6'-1	2'-8
	5'	12½"	11"	12"	6'-10	12"	13'-8	120	7	14"	29'-0	7'-7	4'-4	9½"	5'-2	3'-6	4	14"	33'-6	22'-7	7	14"	28'-8	60	5	7"	6'-10	2'-8
	6'	12½"	11"	12"	7'-10	12"	15'-8	132	7	13"	29'-0	7'-7	4'-4	9½"	5'-2	3'-6	4	13"	33'-6	22'-7	7	13"	28'-8	60	5	6½"	7'-4	2'-8
	7'	12½"	11"	12"	8'-10	12"	17'-8	144	7	13"	29'-0	7'-7	4'-4	9½"	5'-2	3'-6	4	13"	33'-6	22'-7	7	13"	28'-8	60	5	6½"	7'-10	2'-8
	8'	12½"	11"	12"	9'-10	12"	19'-8	144	7	13"	29'-0	7'-7	4'-4	9½"	5'-2	3'-6	4	13"	33'-6	22'-7	7	13"	28'-8	60	5	6½"	8'-4	2'-8
	9'	12½"	11"	12"	10'-10	12"	21'-8	156	7	13"	29'-0	7'-7	4'-4	9½"	5'-2	3'-6	4	13"	33'-6	22'-7	7	13"	28'-8	60	5	6½"	8'-10	2'-8
	10'	12½"	11"	12"	11'-10	12"	23'-8	168	7	13"	29'-0	7'-7	4'-4	9½"	5'-2	3'-6	4	13"	33'-6	22'-7	7	13"	28'-8	60	5	6½"	9'-4	2'-8
12'	8'	15"	13"	12"	10'-3	12"	20'-6	144	8	15"	34'-8	9'-1	5'-1	12"	6'-2	4'-1	4	15"	40'-0	27'-0	8	15"	34'-4	70	6	7½"	8'-10	2'-11
	9'	15"	13"	12"	11'-3	12"	22'-6	156	8	15"	34'-8	9'-1	5'-1	12'	6'-2	4'-1	4	15"	40'-0	27'-0	8	15"	34'-4	70	6	7½"	9'-4	2'-11
	10'	15"	13"	12"	12'-3	12"	24'-6	168	8	15"	34'-8	9'-1	5'-1	12"	6'-2	4'-1	5	15"	40'-0	27'-0	8	15"	34'-4	70	6	7½"	9'-10	2'-11
	11'	15"	13"	12"	13'-3	12"	26'-6	168	8	14"	34'-8	9'-1	5'-1	12"	6'-2	4'-1	4	14"	40'-0	27'-0	8	14"	34'-4	70	5	7"	10'-10	3'-5
	12'	15"	13"	12"	14'-3	12"	28'-6	180	8	14"	34'-8	9'-1	5'-1	12"	6'-2	4'-1	5	14"	40'-0	27'-0	8	14"	34'-4	70	6	7"	11'-4	3'-5

TABLE III
15' -20' FILL

Span "S"	Height "H"	Top Slab "T"	Walls "W"	aa Spacing	aa Length	bb Spacing	bb Length	cc ✦Number	dd Bar Size	dd Spacing	dd Length	dd A	dd B	dd C	dd D	dd E	ee & eel Bar Size	ee & eel Spacing	ee Length	eel Length	ff Bar Size	ff Spacing	ff Length	gg ✦Number	hh Bar Size	hh Spacing	hh Length	hh F
6'	3'	9½"	8"	12"	4'-4	12"	8'-9	108	5	13"	17'-9	4'-7	2'-7	6½"	3'-1	2'-2	5	13"	20'-9	14'-1	5	13"	17'-6	40	4	6½"	5'-1	2'-5
	4'	9½"	8"	12"	5'-4	12"	10'-9	120	5	13"	17'-9	4'-7	2'-7	6½"	3'-1	2'-2	5	13"	20'-9	14'-1	5	13"	17'-6	40	4	6½"	5'-7	2'-5
	5'	9½"	8"	12"	6'-4	12"	12'-9	120	5	13"	17'-9	4'-7	2'-7	6½"	3'-1	2'-2	5	13"	20'-9	14'-1	5	13"	17'-6	40	4	6½"	6'-1	2'-5
	6'	9½"	8"	12"	7'-4	12"	14'-9	132	5	13"	17'-9	4'-7	2'-7	6½"	3'-1	2'-2	5	13"	20'-9	14'-1	5	13"	17'-6	40	4	6½"	6'-7	2'-5
	7'	9½"	8"	12"	8'-4	12"	16'-9	144	5	13"	17'-9	4'-7	2'-7	6½"	3'-1	2'-2	5	13"	20'-9	14'-1	5	13"	17'-6	40	4	6½"	7'-1	2'-5
8'	3'	12"	9"	12"	4'-9	12"	9'-8	108	6	12"	23'-6	6'-1	3'-3	9"	4'-2	2'-10	4	12"	27'-0	18'-3	6	12"	22'-9	50	4	6"	5'-5	2'-6
	4'	12"	9"	12"	5'-9	12"	11'-8	120	6	12"	23'-6	6'-1	3'-3	9"	4'-2	2'-10	4	12"	27'-0	18'-3	6	12"	22'-9	50	4	6"	5'-11	2'-6
	5'	12"	9"	12"	6'-9	12"	13'-8	120	6	12"	23'-6	6'-1	3'-3	9"	4'-2	2'-10	4	12"	27'-0	18'-3	6	12"	22'-9	50	4	6"	6'-5	2'-6
	6'	12"	9"	12"	7'-9	12"	15'-8	132	6	12"	23'-6	6'-1	3'-3	9"	4'-2	2'-10	4	12"	27'-0	18'-3	6	12"	22'-9	50	4	6"	6'-11	2'-6
	7'	12"	9"	12"	8'-9	12"	17'-8	144	6	12"	23'-6	6'-1	3'-3	9"	4'-2	2'-10	4	12"	27'-0	18'-3	6	12"	22'-9	50	4	6"	7'-5	2'-6
	8'	12"	9"	12"	9'-9	12"	19'-8	144	6	12"	23'-6	6'-1	3'-3	9"	4'-2	2'-10	4	12"	27'-0	18'-3	6	12"	22'-9	50	4	6"	7'-11	2'-6
10'	3'	15"	11"	12"	5'-3	12"	10'-8	108	7	13"	29'-4	7'-7	3'-11	1'-0	5'-2	3'-6	4	13"	33'-6	22'-7	7	13"	28'-8	60	5	6½"	6'-0	2'-8
	4'	15"	11"	12"	6'-3	12"	12'-8	120	7	13"	29'-4	7'-7	3'-11	1'-0	5'-2	3'-6	4	13"	33'-6	22'-7	7	13"	28'-8	60	5	6½"	6'-6	2'-8
	5'	15"	11"	12"	7'-3	12"	14'-8	120	7	13"	29'-4	7'-7	3'-11	1'-0	5'-2	3'-6	4	13"	33'-6	22'-7	7	13"	28'-8	60	5	6½"	7'-0	2'-8
	6'	15"	11"	12"	8'-3	12"	16'-8	132	7	13"	29'-4	7'-7	3'-11	1'-0	5'-2	3'-6	4	13"	33'-6	22'-7	7	13"	28'-8	60	5	6½"	7'-6	2'-8
	7'	15"	11"	12"	9'-3	12"	18'-8	144	7	13"	29'-4	7'-7	3'-11	1'-0	5'-2	3'-6	4	13"	33'-6	22'-7	7	13"	28'-8	60	5	6½"	8'-0	2'-8
	8'	15"	11"	12"	10'-3	12"	20'-8	144	7	13"	29'-4	7'-7	3'-11	1'-0	5'-2	3'-6	4	13"	33'-6	22'-7	7	13"	28'-8	60	5	6½"	8'-6	2'-8
	9'	15"	11"	12"	11'-3	12"	22'-8	156	7	13"	29'-4	7'-7	3'-11	1'-0	5'-2	3'-6	4	13"	33'-6	22'-7	7	13"	28'-8	60	5	6½"	9'-0	2'-8
	10'	15"	11"	12"	12'-3	12"	24'-8	168	7	13"	29'-4	7'-7	3'-11	1'-0	5'-2	3'-6	4	13"	33'-6	22'-7	7	13"	28'-8	60	5	6½"	9'-6	2'-9
12'	8'	18"	13"	12"	10'-9	12"	21'-6	144	8	14"	35'-1	9'-1	4'-7	1'-3	6'-2	4'-1	4	14"	40'-0	27'-0	8	14"	34'-4	70	5	7"	9'-6	3'-5
	9'	18"	13"	12"	11'-9	12"	23'-6	156	8	14"	35'-1	9'-1	4'-7	1'-3	6'-2	4'-1	4	14"	40'-0	27'-0	8	14"	34'-4	70	5	7"	10'-0	3'-5
	10'	18"	13"	12"	12'-9	12"	25'-6	168	8	14"	35'-1	9'-1	4'-7	1'-3	6'-2	4'-1	4	14"	40'-0	27'-0	8	14"	34'-4	70	6	7"	10'-7	3'-5
	11'	18"	13"	12"	13'-9	12"	27'-6	168	8	14"	35'-1	9'-1	4'-7	1'-3	6'-2	4'-1	5	14"	40'-0	27'-0	8	14"	34'-4	70	6	7"	11'-1	3'-5
	12'	18"	13"	12"	14'-9	12"	29'-6	180	8	14"	35'-1	9'-1	4'-7	1'-3	6'-2	4'-1	5	14"	40'-0	27'-0	8	14"	34'-4	70	6	7"	11'-7	3'-5

TABLE IV
20' -25' FILL

Span "S"	Height "H"	Top Slab "T"	Walls "W"	aa Spacing	aa Length	bb Spacing	bb Length	cc ✦Number	dd Bar Size	dd Spacing	dd Length	dd A	dd B	dd C	dd D	dd E	ee & eel Bar Size	ee & eel Spacing	ee Length	eel Length	ff Bar Size	ff Spacing	ff Length	gg ✦Number	hh Bar Size	hh Spacing	hh Length	hh F
6'	3'	11"	8"	12"	4'-7	12"	9'-2	108	5	12"	18'-0	4'-7	2'-4	8"	3'-1	2'-2	5	12"	20'-9	14'-1	5	12"	17'-6	40	4	6"	5'-3	2'-5
	4'	11"	8"	12"	5'-7	12"	11'-2	120	5	12"	18'-0	4'-7	2'-4	8"	3'-1	2'-2	5	12"	20'-9	14'-1	5	12"	17'-6	40	4	6"	5'-9	2'-5
	5'	11"	8"	12"	6'-7	12"	13'-2	120	5	12"	18'-0	4'-7	2'-4	8"	3'-1	2'-2	5	12"	20'-9	14'-1	5	12"	17'-6	40	4	6"	6'-3	2'-5
	6'	11"	8"	12"	7'-7	12"	15'-2	132	5	12"	18'-0	4'-7	2'-4	8"	3'-1	2'-2	5	12"	20'-9	14'-1	5	12"	17'-6	40	4	6"	6'-9	2'-5
	7'	11"	8"	12"	8'-7	12"	17'-2	144	5	12"	18'-0	4'-7	2'-4	8"	3'-1	2'-2	5	12"	20'-9	14'-1	5	12"	17'-6	40	4	6"	7'-3	2'-5
8'	3'	14"	9"	12"	5'-1	12"	10'-2	108	6	12"	23'-9	6'-1	2'-11	11"	4'-2	2'-10	4	12"	27'-0	18'-3	6	12"	22'-9	50	4	6"	5'-7	2'-6
	4'	14"	9"	12"	6'-1	12"	12'-2	120	6	12"	23'-9	6'-1	2'-11	11"	4'-2	2'-10	4	12"	27'-0	18'-3	6	12"	22'-9	50	4	6"	6'-1	2'-6
	5'	14"	9"	12"	7'-1	12"	14'-2	120	6	12"	23'-9	6'-1	2'-11	11"	4'-2	2'-10	4	12"	27'-0	18'-3	6	12"	22'-9	50	4	6"	6'-7	2'-6
	6'	14"	9"	12"	8'-1	12"	16'-2	132	6	12"	23'-9	6'-1	2'-11	11"	4'-2	2'-10	4	12"	27'-0	18'-3	6	12"	22'-9	50	4	6"	7'-1	2'-6
	7'	14"	9"	12"	9'-1	12"	18'-2	144	6	12"	23'-9	6'-1	2'-11	11"	4'-2	2'-10	4	12"	27'-0	18'-3	6	12"	22'-9	50	4	6"	7'-7	2'-6
	8'	14"	9"	12"	10'-1	12"	20'-2	144	6	12"	23'-9	6'-1	2'-11	11"	4'-2	2'-10	4	12"	27'-0	18'-3	6	12"	22'-9	50	4	6"	8'-1	2'-6
10'	3'	17"	11"	12"	5'-7	12"	11'-2	108	7	13"	29'-7	7'-7	3'-7	1'-2	5'-2	3'-6	4	13"	33'-6	22'-7	7	13"	28'-8	60	5	6½"	6'-3	2'-9
	4'	17"	11"	12"	6'-7	12"	13'-2	120	7	13"	29'-7	7'-7	3'-7	1'-2	5'-2	3'-6	4	13"	33'-6	22'-7	7	13"	28'-8	60	5	6½"	6'-9	2'-9
	5'	17"	11"	12"	7'-7	12"	15'-2	120	7	13"	29'-7	7'-7	3'-7	1'-2	5'-2	3'-6	4	13"	33'-6	22'-7	7	13"	28'-8	60	5	6½"	7'-3	2'-9
	6'	17"	11"	12"	8'-7	12"	17'-2	132	7	13"	29'-7	7'-7	3'-7	1'-2	5'-2	3'-6	4	13"	33'-6	22'-7	7	13"	28'-8	60	5	6½"	7'-9	2'-9
	7'	17"	11"	12"	9'-7	12"	19'-2	144	7	13"	29'-7	7'-7	3'-7	1'-2	5'-2	3'-6	4	13"	33'-6	22'-7	7	13"	28'-8	60	5	6½"	8'-3	2'-9
	8'	17"	11"	12"	10'-7	12"	21'-2	144	7	13"	29'-7	7'-7	3'-7	1'-2	5'-2	3'-6	4	13"	33'-6	22'-7	7	13"	28'-8	60	5	6½"	8'-9	2'-9
	9'	17"	11"	12"	11'-7	12"	23'-2	156	7	13"	29'-7	7'-7	3'-7	1'-2	5'-2	3'-6	4	13"	33'-6	22'-7	7	13"	28'-8	60	5	6½"	9'-3	2'-9
	10'	17"	11"	12"	12'-7	12"	25'-2	168	7	13"	29'-7	7'-7	3'-7	1'-2	5'-2	3'-6	4	13"	33'-6	22'-7	7	13"	28'-8	60	5	6½"	9'-9	2'-9
12'	8'	20½"	13"	12"	11'-2	12"	22'-6	144	8	14"	35'-5	9'-1	4'-2	1'-5½	6'-2	4'-1	5	14"	40'-0	27'-0	8	14"	34'-4	70	6	7"	9'-4	2'-11
	9'	20½"	13"	12"	12'-2	12"	24'-6	156	8	14"	35'-5	9'-1	4'-2	1'-5½	6'-2	4'-1	5	14"	40'-0	27'-0	8	14"	34'-4	70	6	7"	9'-10	2'-11
	10'	20½"	13"	12"	13'-2	12"	26'-6	168	8	14"	35'-5	9'-1	4'-2	1'-5½	6'-2	4'-1	5	14"	40'-0	27'-0	8	14"	34'-4	70	6	7"	10'-4	2'-11
	11'	20½"	13"	12"	14'-2	12"	28'-6	168	8	14"	35'-5	9'-1	4'-2	1'-5½	6'-2	4'-1	5	14"	40'-0	27'-0	8	14"	34'-4	70	6	7"	11'-4	3'-5
	12'	20½"	13"	12"	15'-2	12"	30'-6	180	8	13"	35'-5	9'-1	4'-2	1'-5½	6'-2	4'-1	5	13"	40'-0	27'-0	8	13"	34'-4	70	5	6½"	11'-9	3'-5

✦Total number of bars in the cross-section.

TABLE V
25' -30' FILL

Span "S"	Height "H"	Top Slab "T"	Walls "W"	aa Spacing	aa Length	bb Spacing	bb Length	cc ✦Number	dd Bar Size	dd Spacing	dd Length	dd A	dd B	dd C	dd D	dd E	ee & eel Bar Size	ee & eel Spacing	ee Length	eel Length	ff Bar Size	ff Spacing	ff Length	gg ✦Number	hh Bar size	hh Spacing	hh Length	hh F
6'	3'	12½"	8"	12"	4'-10	12"	9'-8	108	6	16"	18'-2	4'-7	2'-1	9½"	3'-1	2'-2	6	16"	20'-9	14'-1	6	16"	17'-6	40	4	8"	5'-4	2'-5
	4'	12½"	8"	12"	5'-10	12"	11'-8	120	6	16"	18'-2	4'-7	2'-1	9½"	3'-1	2'-2	6	16"	20'-9	14'-1	6	16"	17'-6	40	4	8"	5'-10	2'-5
	5'	12½"	8"	12"	6'-10	12"	13'-8	120	6	16"	18'-2	4'-7	2'-1	9½"	3'-1	2'-2	6	16"	20'-9	14'-1	6	16"	17'-6	40	4	8"	6'-4	2'-5
	6'	12½"	8"	12"	7'-10	12"	15'-8	132	5	12"	18'-2	4'-7	2'-1	9½"	3'-1	2'-2	5	12"	20'-9	14'-1	5	12"	17'-6	40	4	6"	6'-10	2'-5
	7'	12½"	8"	12"	8'-10	12"	17'-8	144	5	12"	18'-2	4'-7	2'-1	9½"	3'-1	2'-2	5	12"	20'-9	14'-1	5	12"	17'-6	40	4	6"	7'-4	2'-5
8'	3'	16	9"	12"	5'-5	12"	11'-0	108	7	16"	24'-0	6'-1	2'-7	1'-1	4'-2	2'-10	4	16"	27'-0	18'-3	7	16"	22'-9	50	5	8"	6'-0	2'-7
	4'	16"	9"	12"	6'-5	12"	13'-0	120	7	16"	24'-0	6'-1	2'-7	1'-1	4'-2	2'-10	4	16"	27'-0	18'-3	7	16"	22'-9	50	5	8"	6'-6	2'-7
	5'	16"	9"	12"	7'-5	12"	15'-0	120	6	12"	24'-0	6'-1	2'-7	1'-1	4'-2	2'-10	4	12"	27'-0	18'-3	6	12"	22'-9	50	4	6"	6'-9	2'-6
	6'	16"	9"	12"	8'-5	12"	17'-0	132	6	12"	24'-0	6'-1	2'-7	1'-1	4'-2	2'-10	4	12"	27'-0	18'-3	6	12"	22'-9	50	4	6"	7'-3	2'-6
	7'	16"	9"	12"	9'-5	12"	19'-0	144	6	12"	24'-0	6'-1	2'-7	1'-1	4'-2	2'-10	4	12"	27'-0	18'-3	6	12"	22'-9	50	4	6"	7'-9	2'-6
	8'	16"	9"	12"	10'-5	12"	21'-0	144	6	12"	24'-0	6'-1	2'-7	1'-1	4'-2	2'-10	4	12"	27'-0	18'-3	6	12"	22'-9	50	4	6"	8'-3	2'-6
10'	3'	19"	11"	12"	5'-11	12"	11'-9	108	7	12"	29'-11	7'-7	3'-3	1'-4	5'-2	3'-6	4	12"	33'-6	22'-7	7	12"	28'-8	60	5	6"	6'-6	2'-9
	4'	19"	11"	12"	6'-11	12"	13'-9	120	7	12"	29'-11	7'-7	3'-3	1'-4	5'-2	3'-6	4	12"	33'-6	22'-7	7	12"	28'-8	60	5	6"	7'-0	2'-9
	5'	19"	11"	12"	7'-11	12"	15'-9	120	7	12"	29'-11	7'-7	3'-3	1'-4	5'-2	3'-6	4	12"	33'-6	22'-7	7	12"	28'-8	60	5	6"	7'-6	2'-9
	6'	19"	11"	12"	8'-11	12"	17'-9	132	7	12"	29'-11	7'-7	3'-3	1'-4	5'-2	3'-6	4	12"	33'-6	22'-7	7	12"	28'-8	60	5	6"	8'-0	2'-9
	7'	19"	11"	12"	9'-11	12"	19'-9	144	7	12"	29'-11	7'-7	3'-3	1'-4	5'-2	3'-6	4	12"	33'-6	22'-7	7	12"	28'-8	60	5	6"	8'-6	2'-9
	8'	19"	11"	12"	10'-11	12"	21'-9	144	7	12"	29'-11	7'-7	3'-3	1'-4	5'-2	3'-6	4	12"	33'-6	22'-7	7	12"	28'-8	60	5	6"	9'-0	2'-9
	9'	19"	11"	12"	11'-11	12"	23'-9	156	7	12"	29'-11	7'-7	3'-3	1'-4	5'-2	3'-6	4	12"	33'-6	22'-7	7	12"	28'-8	60	5	6"	9'-6	2'-9
	10'	19"	11"	11"	12'-11	12"	25'-9	168	7	12"	29'-11	7'-7	3'-3	1'-4	5'-2	3'-6	4	12"	33'-6	22'-7	7	12"	28'-8	60	5	6"	10'-0	2'-9
12'	8'	23"	13"	12"	11'-7	12"	23'-0	144	8	14"	35'-9	9'-1	3'-9	1'-8	6'-2	4'-1	5	14"	40'-0	27'-0	8	14"	34'-4	70	6	7"	10'-0	3'-5
	9'	23"	13"	12"	12'-7	12"	25'-0	156	8	14"	35'-9	9'-1	3'-9	1'-8	6'-2	4'-1	5	14"	40'-0	27'-0	8	14"	34'-4	70	6	7"	10'-6	3'-5
	10'	23"	13"	12"	13'-7	12"	27'-0	168	8	14"	35'-9	9'-1	3'-9	1'-8	6'-2	4'-1	5	14"	40'-0	27'-0	8	14"	34'-4	70	6	7"	11'-0	3'-5
	11'	23"	13"	12"	14'-7	12"	29'-0	168	8	14"	35'-9	9'-1	3'-9	1'-8	6'-2	4'-1	5	14"	40'-0	27'-0	8	14"	34'-4	70	6	7"	11'-6	3'-5
	12'	23"	13"	9"	15'-7	12"	31'-0	180	8	14"	35'-9	9'-1	3'-9	1'-8	6'-2	4'-1	6	14"	40'-0	27'-0	8	14"	34'-4	70	6	7"	12'-0	3'-5

NO	DESCRIPTION OF REVISIONS	MADE BY	DATE
1	Total Redesign of Box	C.H.	6-88
2			
3			
4			

DESIGN
DRAWN
CHECKED

Registered Professional Engineer (Civil) Certificate No. 9910 F. DANIEL DAVIS Date Signed 8-1-88 Arizona U.S.A.

DESIGN APPROVED
J.D. Davis

APPROVED FOR DISTRIBUTION
J.A. Bryant, II.

ARIZONA
DEPARTMENT OF TRANSPORTATION
HIGHWAYS DIVISION
STANDARD DRAWINGS

FIVE BARREL
BOX CULVERT

REVISION 7-88

STANDARD NO. B-02.55

CADD FILENAME= ZFA
VIEW NAME=

TABLE I
0'-10' FILL

Span "S"	Height "H"	Top Slab "T"	Walls "W"	aa Spacing	aa Length	bb Spacing	bb Length	cc Number ✦	dd Bar Size	dd Spacing	dd Length	dd A	dd B	dd C	dd D	dd E	ee Bar Size	ee Spacing	ee Length	ff Bar Size	ff Spacing	ff Length	gg Number ✦	hh Bar Size	hh Spacing	hh Length	hh F
6'	3'	9½"	8"	12"	4'-4	12"	8'-9	128	5	14"	26'-2	4'-7	2'-7	6½"	3'-1	6'-9	5	14"	20'-9	5	14"	16'-0	48	4	7"	5'-1	2'-5
	4'	9½"	8"	12"	5'-4	12"	10'-9	142	5	14"	26'-2	4'-7	2'-7	6½"	3'-1	6'-9	5	14"	20'-9	5	14"	16'-0	48	4	7"	5'-7	2'-5
	5'	9½"	8"	12"	6'-4	12"	12'-9	142	5	14"	26'-2	4'-7	2'-7	6½"	3'-1	6'-9	5	14"	20'-9	5	14"	16'-0	48	4	7"	6'-1	2'-5
	6'	9½"	8"	12"	7'-4	12"	14'-9	156	5	14"	26'-2	4'-7	2'-7	6½"	3'-1	6'-9	5	14"	20'-9	5	14"	16'-0	48	4	7"	6'-7	2'-5
	7'	9½"	8"	12"	8'-4	12"	16'-9	170	5	13"	26'-2	4'-7	2'-7	6½"	3'-1	6'-9	5	13"	20'-9	5	13"	16'-0	48	4	6½"	7'-1	2'-5
8'	3'	9½"	9"	12"	4'-4	12"	8'-9	128	6	14"	33'-9	6'-1	3'-8	6½"	4'-2	8'-7	6	14"	27'-0	6	14"	21'-0	96	6	7"	5'-6	2'-6
	4'	9½"	9"	12"	5'-4	12"	10'-9	142	6	14"	33'-9	6'-1	3'-8	6½"	4'-2	8'-7	6	14"	27'-0	6	14"	21'-0	96	6	7"	6'-0	2'-6
	5'	9½"	9"	12"	6'-4	12"	12'-9	142	6	14"	33'-9	6'-1	3'-8	6½"	4'-2	8'-7	6	14"	27'-0	6	14"	21'-0	96	6	7"	6'-6	2'-6
	6'	9½"	9"	12"	7'-4	12"	14'-9	156	6	14"	33'-9	6'-1	3'-8	6½"	4'-2	8'-7	6	14"	27'-0	6	14"	21'-0	96	6	7"	7'-0	2'-6
	7'	9½"	9"	12"	8'-4	12"	16'-9	170	6	13"	33'-9	6'-1	3'-8	6½"	4'-2	8'-7	6	13"	27'-0	6	13"	21'-0	96	5	6½"	7'-5	2'-6
	8'	9½"	9"	12"	9'-4	12"	18'-9	170	6	13"	33'-9	6'-1	3'-8	6½"	4'-2	8'-7	6	13"	27'-0	6	13"	21'-0	96	6	6½"	8'-0	2'-6
10'	3'	10½"	11"	12"	4'-6	12"	9'-2	128	7	17"	42'-3	7'-7	4'-8	7½"	5'-2	11'-1	6	17"	33'-6	7	17"	26'-6	132	6	8½"	6'-1	3'-0
	4'	10½"	11"	12"	5'-6	12"	11'-2	142	7	17"	42'-3	7'-7	4'-8	7½"	5'-2	11'-1	6	17"	33'-6	7	17"	26'-6	132	6	8½"	6'-7	3'-0
	5'	10½"	11"	12"	6'-6	12"	13'-2	142	6	12"	42'-3	7'-7	4'-8	7½"	5'-2	11'-1	5	12"	33'-6	6	12"	26'-6	132	5	6"	6'-8	2'-8
	6'	10½"	11"	12"	7'-6	12"	15'-2	156	6	12"	42'-3	7'-7	4'-8	7½"	5'-2	11'-1	5	12"	33'-6	6	12"	26'-6	132	5	6"	7'-2	2'-8
	7'	10½"	11"	12"	8'-6	12"	17'-2	170	7	15"	42'-3	7'-7	4'-8	7½"	5'-2	11'-1	5	15"	33'-6	7	15"	26'-6	132	6	7½"	7'-9	2'-8
	8'	10½"	11"	12"	9'-6	12"	19'-2	170	7	15"	42'-3	7'-7	4'-8	7½"	5'-2	11'-1	5	15"	33'-6	7	15"	26'-6	132	6	7½"	8'-3	2'-8
	9'	10½"	11"	12"	10'-6	12"	21'-2	184	7	15"	42'-3	7'-7	4'-8	7½"	5'-2	11'-1	6	15"	33'-6	7	15"	26'-6	132	6	7½"	8'-9	2'-8
	10'	10½"	11"	12"	11'-6	12"	23'-2	198	7	14"	42'-3	7'-7	4'-8	7½"	5'-2	11'-1	5	14"	33'-6	7	14"	26'-6	132	6	7"	9'-3	2'-8
12'	8'	12½"	13"	12"	9'-10	12"	20'-0	170	7	13"	50'-8	9'-1	5'-6	9½"	6'-2	13'-3	5	13"	40'-0	7	13"	31'-8	156	6	6½"	8'-7	2'-10
	9'	12½"	13"	12"	10'-10	12"	22'-0	184	8	16"	50'-8	9'-1	5'-6	9½"	6'-2	13'-3	5	16"	40'-0	8	16"	31'-8	156	6	8"	9'-1	2'-10
	10'	12½"	13"	12"	11'-10	12"	24'-0	198	8	16"	50'-8	9'-1	5'-6	9½"	6'-2	13'-3	5	16"	40'-0	8	16"	31'-8	156	6	8"	9'-7	2'-10
	11'	12½"	13"	12"	12'-10	12"	26'-0	198	7	12"	50'-8	9'-1	5'-6	9½"	6'-2	13'-3	4	12"	40'-0	7	12"	31'-8	156	6	6"	10'-1	2'-10
	12'	12½"	13"	12"	13'-10	12"	28'-0	212	7	12"	50'-8	9'-1	5'-6	9½"	6'-2	13'-3	5	12"	40'-0	7	12"	31'-8	156	6	6"	10'-7	2'-10

✦Total number of bars in the cross-section.

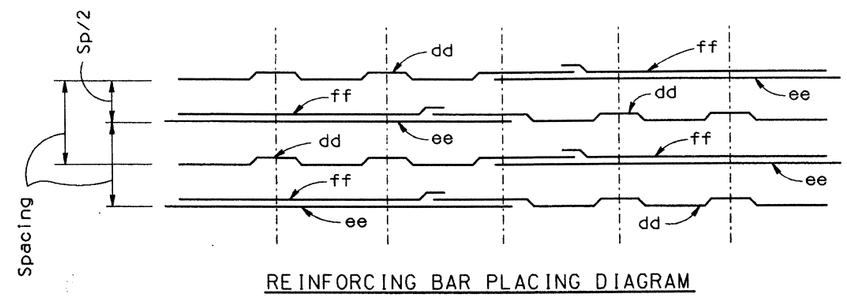

REINFORCING BAR PLACING DIAGRAM

Height "H"	"J" Dim.	"K" Spaces
3'	9"	1
4'	3"	2
5'	12"	2
6'	9"	3
7'	3"	4
8'	12"	4
9'	9"	5
10'	3"	6
11'	12"	6
12'	9"	7

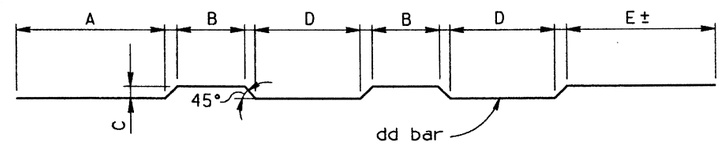

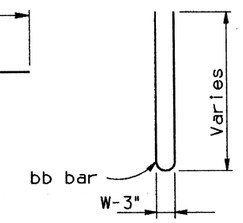

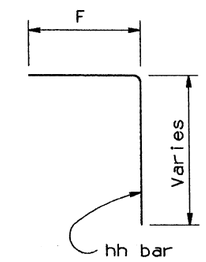

BENDS

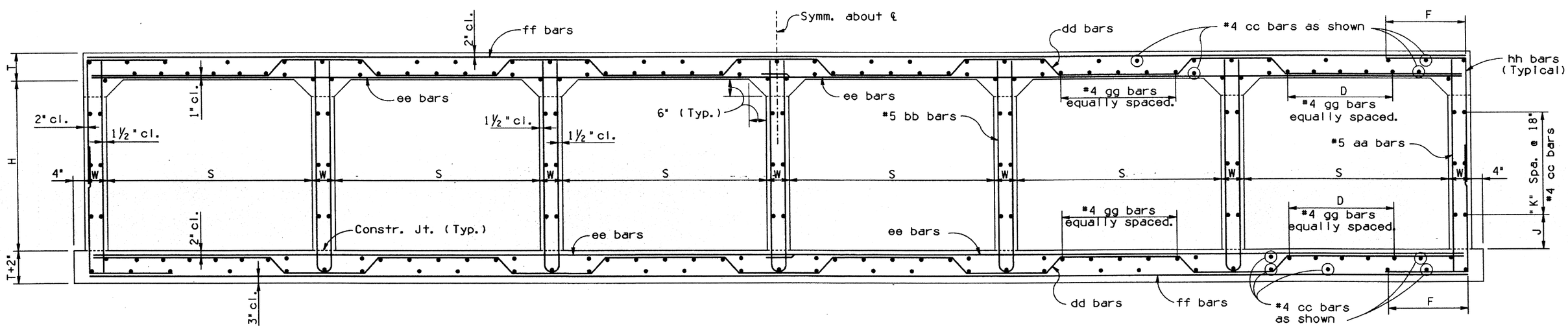

TYPICAL SECTION

NOTE:
See B-02.65 for Tables II thru V.
See B-01.10 for General Notes and Miscellaneous Details.
See B-02.70 for Quantities.

NOTE:
Reinforcing shown is for placement location only.
Use the appropiate table to determine the reinforcing requirements.

NO	DESCRIPTION OF REVISIONS	MADE BY	DATE
1	Total Redesign of Box	J.M.	6-88
2	Clarified bars callout	J.M.	4-92
3			
4			

DESIGN
DRAWN
CHECKED

CADD FILENAME= ZFA
VIEW NAME=

DESIGN APPROVED

APPROVED FOR DISTRIBUTION

ARIZONA
DEPARTMENT OF TRANSPORTATION
HIGHWAYS DIVISION
STANDARD DRAWINGS

SIX BARREL
BOX CULVERT

REVISION 4-92

STANDARD NO. B-02.60

TABLE II
10'-15' FILL

Span "S"	Height "H"	Top Slab "T"	Walls "W"	aa Spacing	aa Length	bb Spacing	bb Length	cc ✦Number	dd Bar Size	dd Spacing	dd Length	dd A	dd B	dd C	dd D	dd E	ee Bar Size	ee Spacing	ee Length	ff Bar Size	ff Spacing	ff Length	gg ✦Number	hh Bar Size	hh Spacing	hh Length	hh F
6'	3'	8"	8"	12"	4'-1	12"	8'-0	128	5	14"	23'-0	4'-7	2'-10	5"	3'-1	4'-0	5	14"	20'-9	5	14"	16'-0	48	4	7"	5'-0	2'-5
	4'	8"	8"	12"	5'-1	12"	10'-0	142	5	14"	23'-0	4'-7	2'-10	5"	3'-1	4'-0	5	14"	20'-9	5	14"	16'-0	48	4	7"	5'-6	2'-5
	5'	8"	8"	12"	6'-1	12"	12'-0	142	5	14"	23'-0	4'-7	2'-10	5"	3'-1	4'-0	5	14"	20'-9	5	14"	16'-0	48	4	7"	6'-0	2'-5
	6'	8"	8"	12"	7'-1	12"	14'-0	156	5	14"	23'-0	4'-7	2'-10	5"	3'-1	4'-0	5	14"	20'-9	5	14"	16'-0	48	4	7"	6'-6	2'-5
	7'	8"	8"	12"	8'-1	12"	16'-0	170	5	14"	23'-0	4'-7	2'-10	5"	3'-1	4'-0	5	14"	20'-9	5	14"	16'-0	48	4	7"	7'-0	2'-5
8'	3'	10½"	9"	12"	4'-6	12"	9'-2	128	6	13"	30'-5	6'-1	3'-6	7½"	4'-2	5'-0	5	13"	27'-0	6	13"	21'-0	60	4	6½"	5'-3	2'-6
	4'	10½"	9"	12"	5'-6	12"	11'-2	142	6	13"	30'-5	6'-1	3'-6	7½"	4'-2	5'-0	4	13"	27'-0	6	13"	21'-0	60	4	6½"	5'-9	2'-6
	5'	10½"	9"	12"	6'-6	12"	13'-2	142	6	13"	30'-5	6'-1	3'-6	7½"	4'-2	5'-0	4	13"	27'-0	6	13"	21'-0	60	4	6½"	6'-3	2'-6
	6'	10½"	9"	12"	7'-6	12"	15'-2	156	6	13"	30'-5	6'-1	3'-6	7½"	4'-2	5'-0	4	13"	27'-0	6	13"	21'-0	60	4	6½"	6'-9	2'-6
	7'	10½"	9"	12"	8'-6	12"	17'-2	170	6	13"	30'-5	6'-1	3'-6	7½"	4'-2	5'-0	4	13"	27'-0	6	13"	21'-0	60	4	6½"	7'-3	2'-6
	8'	10½"	9"	12"	9'-6	12"	19'-2	170	6	12"	30'-5	6'-1	3'-6	7½"	4'-2	5'-0	4	12"	27'-0	6	12"	21'-0	60	4	6"	7'-9	2'-6
10'	3'	12½"	11"	12"	4'-10	12"	9'-8	128	7	14"	38'-0	7'-7	4'-4	9½"	5'-2	6'-4	4	14"	33'-6	7	14"	26'-6	72	5	7"	5'-10	2'-8
	4'	12½"	11"	12"	5'-10	12"	11'-8	142	7	13"	38'-0	7'-7	4'-4	9½"	5'-2	6'-4	4	13"	33'-6	7	13"	26'-6	72	4	6½"	6'-3	2'-8
	5'	12½"	11"	12"	6'-10	12"	13'-8	142	7	14"	38'-0	7'-7	4'-4	9½"	5'-2	6'-4	4	14"	33'-6	7	14"	26'-6	72	5	7"	6'-10	2'-8
	6'	12½"	11"	12"	7'-10	12"	15'-8	156	7	13"	38'-0	7'-7	4'-4	9½"	5'-2	6'-4	4	13"	33'-6	7	13"	26'-6	72	5	6½"	7'-4	2'-8
	7'	12½"	11"	12"	8'-10	12"	17'-8	170	7	13"	38'-0	7'-7	4'-4	9½"	5'-2	6'-4	4	13"	33'-6	7	13"	26'-6	72	5	6½"	7'-10	2'-8
	8'	12½"	11"	12"	9'-10	12"	19'-8	170	7	13"	38'-0	7'-7	4'-4	9½"	5'-2	6'-4	4	13"	33'-6	7	13"	26'-6	72	5	6½"	8'-4	2'-8
	9'	12½"	11"	12"	10'-10	12"	21'-8	184	7	13"	38'-0	7'-7	4'-4	9½"	5'-2	6'-4	4	13"	33'-6	7	13"	26'-6	72	5	6½"	8'-10	2'-8
	10'	12½"	11"	12"	11'-10	12"	23'-8	198	7	13"	38'-0	7'-7	4'-4	9½"	5'-2	6'-4	4	13"	33'-6	7	13"	26'-6	72	5	6½"	9'-4	2'-8
12'	8'	15"	13"	12"	10'-3	12"	20'-6	170	8	15"	45'-10	9'-1	5'-1	12"	6'-2	7'-9	4	15"	40'-0	8	15"	31'-8	84	6	7½"	8'-10	2'-11
	9'	15"	13"	12"	11'-3	12"	22'-6	184	8	15"	45'-10	9'-1	5'-1	12"	6'-2	7'-9	4	15"	40'-0	8	15"	31'-8	84	6	7½"	9'-4	2'-11
	10'	15"	13"	12"	12'-3	12"	24'-6	198	8	15"	45'-10	9'-1	5'-1	12"	6'-2	7'-9	5	15"	40'-0	8	15"	31'-8	84	6	7½"	9'-10	2'-11
	11'	15"	13"	12"	13'-3	12"	26'-6	198	8	14"	45'-10	9'-1	5'-1	12"	6'-2	7'-9	4	14"	40'-0	8	14"	31'-8	84	5	7"	10'-9	3'-5
	12'	15"	13"	12"	14'-3	12"	28'-6	212	8	14"	45'-10	9'-1	5'-1	12"	6'-2	7'-9	5	14"	40'-0	8	14"	31'-8	84	6	7"	11'-4	3'-5

TABLE III
15'-20' FILL

Span "S"	Height "H"	Top Slab "T"	Walls "W"	aa Spacing	aa Length	bb Spacing	bb Length	cc ✦Number	dd Bar Size	dd Spacing	dd Length	dd A	dd B	dd C	dd D	dd E	ee Bar Size	ee Spacing	ee Length	ff Bar Size	ff Spacing	ff Length	gg ✦Number	hh Bar Size	hh Spacing	hh Length	hh F
6'	3'	9½"	8"	12"	4'-4	12"	8'-9	128	5	13"	23'-0	4'-7	2'-7	6½"	3'-1	3'-9	5	13"	20'-9	5	13"	16'-0	48	4	6½"	5'-1	2'-5
	4'	9½"	8"	12"	5'-4	12"	10'-9	142	5	13"	23'-0	4'-7	2'-7	6½"	3'-1	3'-9	5	13"	20'-9	5	13"	16'-0	48	4	6½"	5'-7	2'-5
	5'	9½"	8"	12"	6'-4	12"	12'-9	142	5	13"	23'-0	4'-7	2'-7	6½"	3'-1	3'-9	5	13"	20'-9	5	13"	16'-0	48	4	6½"	6'-1	2'-5
	6'	9½"	8"	12"	7'-4	12"	14'-9	156	5	13"	23'-0	4'-7	2'-7	6½"	3'-1	3'-9	5	13"	20'-9	5	13"	16'-0	48	4	6½"	6'-7	2'-5
	7'	9½"	8"	12"	8'-4	12"	16'-9	170	5	13"	23'-0	4'-7	2'-7	6½"	3'-1	3'-9	5	13"	20'-9	5	13"	16'-0	48	4	6½"	7'-1	2'-5
8'	3'	12"	9"	12"	4'-9	12"	9'-8	128	6	12"	30'-6	6'-1	3'-3	9"	4'-2	4'-9	4	12"	27'-0	6	12"	21'-0	60	4	6"	5'-5	2'-6
	4'	12"	9"	12"	5'-9	12"	11'-8	142	6	12"	30'-6	6'-1	3'-3	9"	4'-2	4'-9	4	12"	27'-0	6	12"	21'-0	60	4	6"	5'-11	2'-6
	5'	12"	9"	12"	6'-9	12"	13'-8	142	6	12"	30'-6	6'-1	3'-3	9"	4'-2	4'-9	4	12"	27'-0	6	12"	21'-0	60	4	6"	6'-5	2'-6
	6'	12"	9"	12"	7'-9	12"	15'-8	156	6	12"	30'-6	6'-1	3'-3	9"	4'-2	4'-9	4	12"	27'-0	6	12"	21'-0	60	4	6"	6'-11	2'-6
	7'	12"	9"	12"	8'-9	12"	17'-8	170	6	12"	30'-6	6'-1	3'-3	9"	4'-2	4'-9	4	12"	27'-0	6	12"	21'-0	60	4	6"	7'-5	2'-6
	8'	12"	9"	12"	9'-9	12"	19'-8	170	6	12"	30'-6	6'-1	3'-3	9"	4'-2	4'-9	4	12"	27'-0	6	12"	21'-0	60	4	6"	7'-11	2'-6
10'	3'	15"	11"	12"	5'-3	12"	10'-8	128	7	13"	38'-3	7'-7	3'-11	1'-0	5'-2	5'-11	4	13"	33'-6	7	13"	26'-6	72	4	6½"	6'-0	2'-8
	4'	15"	11"	12"	6'-3	12"	12'-8	142	7	13"	38'-3	7'-7	3'-11	1'-0	5'-2	5'-11	4	13"	33'-6	7	13"	26'-6	72	5	6½"	6'-6	2'-8
	5'	15"	11"	12"	7'-3	12"	14'-8	142	7	13"	38'-3	7'-7	3'-11	1'-0	5'-2	5'-11	4	13"	33'-6	7	13"	26'-6	72	5	6½"	7'-0	2'-8
	6'	15"	11"	12"	8'-3	12"	16'-8	156	7	13"	38'-3	7'-7	3'-11	1'-0	5'-2	5'-11	4	13"	33'-6	7	13"	26'-6	72	5	6½"	7'-6	2'-8
	7'	15"	11"	12"	9'-3	12"	18'-8	170	7	13"	38'-3	7'-7	3'-11	1'-0	5'-2	5'-11	4	13"	33'-6	7	13"	26'-6	72	5	6½"	8'-0	2'-8
	8'	15"	11"	12"	10'-3	12"	20'-8	170	7	13"	38'-3	7'-7	3'-11	1'-0	5'-2	5'-11	4	13"	33'-6	7	13"	26'-6	72	5	6½"	8'-6	2'-8
	9'	15"	11"	12"	11'-3	12"	22'-8	184	7	13"	38'-3	7'-7	3'-11	1'-0	5'-2	5'-11	4	13"	33'-6	7	13"	26'-6	72	5	6½"	9'-0	2'-8
	10'	15"	11"	12"	12'-3	12"	24'-8	198	7	13"	38'-3	7'-7	3'-11	1'-0	5'-2	5'-11	4	13"	33'-6	7	13"	26'-6	72	5	6½"	9'-7	2'-9
12'	8'	18"	13"	12"	10'-9	12"	21'-6	170	8	14"	46'-1	9'-1	4'-7	1'-3	6'-2	7'-3	4	14"	40'-0	8	14"	31'-8	84	5	7"	9'-6	3'-5
	9'	18"	13"	12"	11'-9	12"	23'-6	184	8	14"	46'-1	9'-1	4'-7	1'-3	6'-2	7'-3	4	14"	40'-0	8	14"	31'-8	84	5	7"	10'-0	3'-5
	10'	18"	13"	12"	12'-9	12"	25'-6	198	8	14"	46'-1	9'-1	4'-7	1'-3	6'-2	7'-3	4	14"	40'-0	8	14"	31'-8	84	6	7"	10'-7	3'-5
	11'	18"	13"	12"	13'-9	12"	27'-6	198	8	14"	46'-1	9'-1	4'-7	1'-3	6'-2	7'-3	5	14"	40'-0	8	14"	31'-8	84	6	7"	11'-1	3'-5
	12'	18"	13"	12"	14'-9	12"	29'-6	212	8	14"	46'-1	9'-1	4'-7	1'-3	6'-2	7'-3	5	14"	40'-0	8	14"	31'-8	84	6	7"	11'-7	3'-5

TABLE IV
20'-25' FILL

Span "S"	Height "H"	Top Slab "T"	Walls "W"	aa Spacing	aa Length	bb Spacing	bb Length	cc ✦Number	dd Bar Size	dd Spacing	dd Length	dd A	dd B	dd C	dd D	dd E	ee Bar Size	ee Spacing	ee Length	ff Bar Size	ff Spacing	ff Length	gg ✦Number	hh Bar Size	hh Spacing	hh Length	hh F
6'	3'	11"	8"	12"	4'-7	12"	9'-2	128	5	12"	23'-3	4'-7	2'-4	8"	3'-1	3'-6	5	12"	20'-9	5	12"	16'-0	48	4	6"	5'-3	2'-5
	4'	11"	8"	12"	5'-7	12"	11'-2	142	5	12"	23'-3	4'-7	2'-4	8"	3'-1	3'-6	5	12"	20'-9	5	12"	16'-0	48	4	6"	5'-9	2'-5
	5'	11"	8"	12"	6'-7	12"	13'-2	142	5	12"	23'-3	4'-7	2'-4	8"	3'-1	3'-6	5	12"	20'-9	5	12"	16'-0	48	4	6"	6'-3	2'-5
	6'	11"	8"	12"	7'-7	12"	15'-2	156	5	12"	23'-3	4'-7	2'-4	8"	3'-1	3'-6	5	12"	20'-9	5	12"	16'-0	48	4	6"	6'-9	2'-5
	7'	11"	8"	12"	8'-7	12"	17'-2	170	5	12"	23'-3	4'-7	2'-4	8"	3'-1	3'-6	5	12"	20'-9	5	12"	16'-0	48	4	6"	7'-3	2'-5
8'	3'	14"	9"	12"	5'-1	12"	10'-2	128	6	12"	30'-9	6'-1	2'-11	11"	4'-2	4'-5	4	12"	27'-0	6	12"	21'-0	60	4	6"	5'-7	2'-6
	4'	14"	9"	12"	6'-1	12"	12'-2	142	6	12"	30'-9	6'-1	2'-11	11"	4'-2	4'-5	4	12"	27'-0	6	12"	21'-0	60	4	6"	6'-1	2'-6
	5'	14"	9"	12"	7'-1	12"	14'-2	142	6	12"	30'-9	6'-1	2'-11	11"	4'-2	4'-5	4	12"	27'-0	6	12"	21'-0	60	4	6"	6'-7	2'-6
	6'	14"	9"	12"	8'-1	12"	16'-2	156	6	12"	30'-9	6'-1	2'-11	11"	4'-2	4'-5	4	12"	27'-0	6	12"	21'-0	60	4	6"	7'-1	2'-6
	7'	14"	9"	12"	9'-1	12"	18'-2	170	6	12"	30'-9	6'-1	2'-11	11"	4'-2	4'-5	4	12"	27'-0	6	12"	21'-0	60	4	6"	7'-7	2'-6
	8'	14"	9"	12"	10'-1	12"	20'-2	170	6	12"	30'-9	6'-1	2'-11	11"	4'-2	4'-5	4	12"	27'-0	6	12"	21'-0	60	4	6"	8'-1	2'-6
10'	3'	17"	11"	12"	5'-7	12"	11'-2	128	7	13"	38'-5	7'-7	3'-7	1'-2	5'-2	5'-7	4	13"	33'-6	7	13"	26'-6	72	5	6½"	6'-3	2'-9
	4'	17"	11"	12"	6'-7	12"	13'-2	142	7	13"	38'-5	7'-7	3'-7	1'-2	5'-2	5'-7	4	13"	33'-6	7	13"	26'-6	72	5	6½"	6'-9	2'-9
	5'	17"	11"	12"	7'-7	12"	15'-2	142	7	13"	38'-5	7'-7	3'-7	1'-2	5'-2	5'-7	4	13"	33'-6	7	13"	26'-6	72	5	6½"	7'-3	2'-9
	6'	17"	11"	12"	8'-7	12"	17'-2	156	7	13"	38'-5	7'-7	3'-7	1'-2	5'-2	5'-7	4	13"	33'-6	7	13"	26'-6	72	5	6½"	7'-9	2'-9
	7'	17"	11"	12"	9'-7	12"	19'-2	170	7	13"	38'-5	7'-7	3'-7	1'-2	5'-2	5'-7	4	13"	33'-6	7	13"	26'-6	72	5	6½"	8'-3	2'-9
	8'	17"	11"	12"	10'-7	12"	21'-2	170	7	13"	38'-5	7'-7	3'-7	1'-2	5'-2	5'-7	4	13"	33'-6	7	13"	26'-6	72	5	6½"	8'-9	2'-9
	9'	17"	11"	12"	11'-7	12"	23'-2	184	7	13"	38'-5	7'-7	3'-7	1'-2	5'-2	5'-7	4	13"	33'-6	7	13"	26'-6	72	5	6½"	9'-3	2'-9
	10'	17"	11"	12"	12'-7	12"	25'-2	198	7	13"	38'-5	7'-7	3'-7	1'-2	5'-2	5'-7	4	13"	33'-6	7	13"	26'-6	72	5	6½"	9'-9	2'-9
12'	8'	20½"	13"	12"	11'-2	12"	22'-6	170	8	14"	46'-4	9'-1	4'-2	1'-5½	6'-2	6'-10	5	14"	40'-0	8	14"	31'-8	84	6	7"	9'-4	2'-11
	9'	20½"	13"	12"	12'-2	12"	24'-6	184	8	14"	46'-4	9'-1	4'-2	1'-5½	6'-2	6'-10	5	14"	40'-0	8	14"	31'-8	84	6	7"	9'-10	2'-11
	10'	20½"	13"	12"	13'-2	12"	26'-6	198	8	14"	46'-4	9'-1	4'-2	1'-5½	6'-2	6'-10	5	14"	40'-0	8	14"	31'-8	84	6	7"	10'-4	2'-11
	11'	20½"	13"	12"	14'-2	12"	28'-6	198	8	14"	46'-4	9'-1	4'-2	1'-5½	6'-2	6'-10	5	14"	40'-0	8	14"	31'-8	84	6	7"	11'-4	3'-5
	12'	20½"	13"	12"	15'-2	12"	30'-6	212	8	13"	46'-4	9'-1	4'-2	1'-5½	6'-2	6'-10	5	13"	40'-0	8	13"	31'-8	84	6	6½"	11'-9	3'-5

✦ Total number of bars in the cross-section.

TABLE V
25'-30' FILL

Span "S"	Height "H"	Top Slab "T"	Walls "W"	aa Spacing	aa Length	bb Spacing	bb Length	cc ✦Number	dd Bar Size	dd Spacing	dd Length	dd A	dd B	dd C	dd D	dd E	ee Bar Size	ee Spacing	ee Length	ff Bar Size	ff Spacing	ff Length	gg ✦Number	hh Bar Size	hh Spacing	hh Length	hh F
6'	3'	12½"	8"	12"	4'-10	12"	9'-8	128	6	16"	23'-8	4'-7	2'-1	9½"	3'-1	3'-7	6	16"	20'-9	6	16"	16'-0	48	4	8"	5'-4	2'-5
	4'	12½"	8"	12"	5'-10	12"	11'-8	142	6	16"	23'-8	4'-7	2'-1	9½"	3'-1	3'-7	6	16"	20'-9	6	16"	16'-0	48	4	8"	5'-10	2'-5
	5'	12½"	8"	12"	6'-10	12"	13'-8	142	6	16"	23'-8	4'-7	2'-1	9½"	3'-1	3'-7	6	16"	20'-9	6	16"	16'-0	48	4	8"	6'-4	2'-5
	6'	12½"	8"	12"	7'-10	12"	15'-8	156	5	12"	23'-8	4'-7	2'-1	9½"	3'-1	3'-7	5	12"	20'-9	5	12"	16'-0	48	4	6"	6'-10	2'-5
	7'	12½"	8"	12"	8'-10	12"	17'-8	170	5	12"	23'-8	4'-7	2'-1	9½"	3'-1	3'-7	5	12"	20'-9	5	12"	16'-0	48	4	6"	7'-4	2'-5
8'	3'	16"	9"	12"	5'-5	12"	11'-0	128	7	16"	31'-4	6'-1	2'-7	1'-1	4'-2	4'-7	4	16"	27'-0	7	16"	21'-0	60	5	8"	6'-0	2'-7
	4'	16"	9"	12"	6'-5	12"	13'-0	142	7	16"	31'-4	6'-1	2'-7	1'-1	4'-2	4'-7	4	16"	27'-0	7	16"	21'-0	60	5	8"	6'-6	2'-7
	5'	16"	9"	12"	7'-5	12"	15'-0	142	6	12"	31'-4	6'-1	2'-7	1'-1	4'-2	4'-7	4	12"	27'-0	6	12"	21'-0	60	4	6"	6'-9	2'-6
	6'	16"	9"	12"	8'-5	12"	17'-0	156	6	12"	31'-4	6'-1	2'-7	1'-1	4'-2	4'-7	4	12"	27'-0	6	12"	21'-0	60	4	6"	7'-3	2'-6
	7'	16"	9"	12"	9'-5	12"	19'-0	170	6	12"	31'-4	6'-1	2'-7	1'-1	4'-2	4'-7	4	12"	27'-0	6	12"	21'-0	60	4	6"	7'-9	2'-6
	8'	16"	9"	12"	10'-5	12"	21'-0	170	6	12"	31'-4	6'-1	2'-7	1'-1	4'-2	4'-7	4	12"	27'-0	6	12"	21'-0	60	4	6"	8'-3	2'-6
10'	3'	19"	11"	12"	5'-11	12"	11'-9	128	7	12"	38'-7	7'-7	3'-3	1'-4	5'-2	5'-3	4	12"	33'-6	7	12"	26'-6	72	5	6"	6'-6	2'-9
	4'	19"	11"	12"	6'-11	12"	13'-9	142	7	12"	38'-7	7'-7	3'-3	1'-4	5'-2	5'-3	4	12"	33'-6	7	12"	26'-6	72	5	6"	7'-0	2'-9
	5'	19"	11"	12"	7'-11	12"	15'-9	142	7	12"	38'-7	7'-7	3'-3	1'-4	5'-2	5'-3	4	12"	33'-6	7	12"	26'-6	72	5	6"	7'-6	2'-9
	6'	19"	11"	12"	8'-11	12"	17'-9	156	7	12"	38'-7	7'-7	3'-3	1'-4	5'-2	5'-3	4	12"	33'-6	7	12"	26'-6	72	5	6"	8'-0	2'-9
	7'	19"	11"	12"	9'-11	12"	19'-9	170	7	12"	38'-7	7'-7	3'-3	1'-4	5'-2	5'-3	4	12"	33'-6	7	12"	26'-6	72	5	6"	8'-6	2'-9
	8'	19"	11"	12"	10'-11	12"	21'-9	170	7	12"	38'-7	7'-7	3'-3	1'-4	5'-2	5'-3	4	12"	33'-6	7	12"	26'-6	72	5	6"	9'-0	2'-9
	9'	19"	11"	12"	11'-11	12"	23'-9	184	7	12"	38'-7	7'-7	3'-3	1'-4	5'-2	5'-3	4	12"	33'-6	7	12"	26'-6	72	5	6"	9'-6	2'-9
	10'	19"	11"	11½"	12'-11	12"	25'-9	198	7	12"	38'-7	7'-7	3'-3	1'-4	5'-2	5'-3	4	12"	33'-6	7	12"	26'-6	72	5	6"	10'-0	2'-9
12'	8'	23"	13"	12"	11'-7	12"	23'-0	170	8	14"	46'-7	9'-1	3'-9	1'-8	6'-2	6'-5	5	14"	40'-0	8	14"	31'-8	84	6	7"	10'-0	3'-5
	9'	23"	13"	12"	12'-7	12"	25'-0	184	8	14"	46'-7	9'-1	3'-9	1'-8	6'-2	6'-5	5	14"	40'-0	8	14"	31'-8	84	6	7"	10'-6	3'-5
	10'	23"	13"	12"	13'-7	12"	27'-0	198	8	14"	46'-7	9'-1	3'-9	1'-8	6'-2	6'-5	5	14"	40'-0	8	14"	31'-8	84	6	7"	11'-0	3'-5
	11'	23"	13"	12"	14'-7	12"	29'-0	198	8	14"	46'-7	9'-1	3'-9	1'-8	6'-2	6'-5	5	14"	40'-0	8	14"	31'-8	84	6	7"	11'-6	3'-5
	12'	23"	13"	9½"	15'-7	12"	31'-0	212	8	14"	46'-7	9'-1	3'-9	1'-8	6'-2	6'-5	6	14"	40'-0	8	14"	31'-8	84	6	7"	12'-0	3'-5

NO	DESCRIPTION OF REVISIONS	MADE BY	DATE
1	Total Redesign of Box	J. M.	6-88
2			
3			
4			

DESIGN
DRAWN
CHECKED

Registered Professional Engineer (Civil) — Certificate No. 9910 — F. DANIEL DAVIS — Date Signed 8-1-88 — Arizona U. S. A.

DESIGN APPROVED: F. D. Davis

APPROVED FOR DISTRIBUTION: T. A. Bryant, II.

ARIZONA
DEPARTMENT OF TRANSPORTATION
HIGHWAYS DIVISION
STANDARD DRAWINGS

SIX BARREL
BOX CULVERT

REVISION: 7-88

STANDARD NO.: B-02.65

CADD FILENAME= ZFA
VIEW NAME=

DOUBLE BARREL

Span 'S'	Height 'H'	Table I Concrete C.Y.	Table I Reinf. Steel Lbs.	Table II Concrete C.Y.	Table II Reinf. Steel Lbs.	Table III Concrete C.Y.	Table III Reinf. Steel Lbs.	Table IV Concrete C.Y.	Table IV Reinf. Steel Lbs.	Table V Concrete C.Y.	Table V Reinf. Steel Lbs.
6'	3	1.172	172.1	1.039	167.5	1.172	177.7	1.305	190.0	1.437	187.7
	4	1.246	183.8	1.113	179.2	1.246	189.8	1.379	202.3	1.511	199.0
	5	1.320	191.6	1.187	187.0	1.320	197.8	1.453	210.7	1.585	206.3
	6	1.394	203.3	1.261	198.7	1.394	209.8	1.527	223.0	1.659	225.1
	7	1.468	224.5	1.335	210.5	1.468	221.8	1.601	235.4	1.734	237.5
8'	3	1.475	261.6	1.590	236.4	1.762	253.5	1.991	256.6	2.221	242.2
	4	1.558	274.9	1.673	248.5	1.845	265.8	2.075	268.9	2.304	253.5
	5	1.642	284.3	1.756	256.5	1.928	274.1	2.158	277.3	2.387	280.5
	6	1.725	297.6	1.840	268.5	2.012	286.5	2.241	289.6	2.471	292.8
	7	1.808	301.3	1.923	280.5	2.095	298.9	2.325	302.0	2.554	305.2
	8	1.892	337.1	2.006	304.5	2.178	307.2	2.408	310.3	2.637	313.5
10'	3	1.965	296.9	2.250	303.7	2.606	325.7	2.891	329.2	3.176	354.8
	4	2.067	310.0	2.352	333.8	2.708	337.8	2.993	341.2	3.278	367.1
	5	2.168	318.4	2.453	323.2	2.810	345.8	3.095	349.3	3.380	375.4
	6	2.270	330.7	2.555	353.9	2.912	357.8	3.197	361.3	3.481	387.8
	7	2.372	355.9	2.657	365.9	3.013	369.9	3.298	373.3	3.583	400.2
	8	2.474	364.9	2.759	373.9	3.115	377.9	3.400	381.3	3.685	408.5
	9	2.576	394.3	2.861	385.9	3.217	389.9	3.502	393.4	3.787	420.8
	10	2.678	410.1	2.963	398.0	3.319	401.9	3.604	405.4	3.889	434.4
12'	8	3.282	456.2	3.708	458.6	4.219	465.8	4.644	495.8	5.070	505.6
	9	3.403	453.7	3.828	471.6	4.339	477.5	4.765	509.1	5.190	519.0
	10	3.523	466.4	3.949	484.6	4.459	523.2	4.885	522.4	5.311	532.3
	11	3.643	523.5	4.069	491.1	4.580	532.5	5.005	536.9	5.431	541.6
	12	3.764	537.7	4.189	538.3	4.700	545.8	5.126	542.1	5.551	584.6

TRIPLE BARREL

Span 'S'	Height 'H'	Table I Concrete C.Y.	Table I Reinf. Steel Lbs.	Table II Concrete C.Y.	Table II Reinf. Steel Lbs.	Table III Concrete C.Y.	Table III Reinf. Steel Lbs.	Table IV Concrete C.Y.	Table IV Reinf. Steel Lbs.	Table V Concrete C.Y.	Table V Reinf. Steel Lbs.
6'	3	1.687	237.6	1.493	231.1	1.687	244.7	1.882	261.0	2.076	262.9
	4	1.786	252.8	1.592	246.3	1.786	260.2	1.980	276.8	2.175	277.6
	5	1.885	262.6	1.690	256.1	1.885	270.3	2.079	287.2	2.274	287.0
	6	1.984	277.8	1.789	271.3	1.984	285.7	2.178	303.0	2.372	305.8
	7	2.082	305.2	1.888	286.5	2.082	301.2	2.277	318.8	2.471	321.5
8'	3	2.135	358.1	2.303	330.0	2.557	356.4	2.894	360.3	3.231	344.1
	4	2.246	374.9	2.415	348.2	2.668	372.2	3.005	376.1	3.343	358.8
	5	2.357	386.3	2.526	358.4	2.779	382.6	3.116	386.5	3.454	391.2
	6	2.468	403.0	2.637	373.8	2.890	398.4	3.227	402.3	3.565	407.0
	7	2.579	415.4	2.748	389.3	3.001	414.2	3.338	418.0	3.676	422.8
	8	2.690	453.3	2.859	420.9	3.112	424.6	3.450	428.5	3.787	433.2
10'	3	2.851	430.6	3.271	433.3	3.795	464.5	4.215	469.1	4.635	503.4
	4	2.987	446.4	3.406	472.5	3.931	479.9	4.351	484.5	4.771	519.2
	5	3.122	459.1	3.542	458.3	4.067	490.0	4.487	494.7	4.906	529.7
	6	3.258	474.9	3.678	500.0	4.203	505.5	4.622	510.1	5.042	545.4
	7	3.394	504.9	3.814	515.5	4.338	520.9	4.758	525.6	5.178	561.2
	8	3.530	516.0	3.950	525.6	4.474	531.1	4.894	535.7	5.314	571.6
	9	3.666	556.8	4.085	541.0	4.610	546.5	5.030	551.1	5.450	587.4
	10	3.801	574.5	4.221	556.5	4.746	562.0	5.166	566.6	5.585	604.3
12'	8	4.703	646.9	5.330	643.6	6.083	662.3	6.711	695.8	7.338	705.2
	9	4.863	649.1	5.491	660.0	6.244	677.5	6.871	711.7	7.499	722.0
	10	5.024	665.2	5.651	676.4	6.404	726.5	7.032	728.4	7.659	738.7
	11	5.184	733.7	5.812	695.0	6.565	737.9	7.192	745.0	7.820	750.2
	12	5.345	752.3	5.972	745.4	6.725	754.7	7.353	764.1	7.980	806.9

FOUR BARREL

Span 'S'	Height 'H'	Table I Concrete C.Y.	Table I Reinf. Steel Lbs.	Table II Concrete C.Y.	Table II Reinf. Steel Lbs.	Table III Concrete C.Y.	Table III Reinf. Steel Lbs.	Table IV Concrete C.Y.	Table IV Reinf. Steel Lbs.	Table V Concrete C.Y.	Table V Reinf. Steel Lbs.
6'	3	2.203	305.2	1.947	295.8	2.203	313.9	2.459	334.3	2.715	340.3
	4	2.326	323.8	2.070	314.4	2.326	332.8	2.582	353.5	2.838	358.4
	5	2.450	335.7	2.193	326.3	2.450	345.0	2.706	366.0	2.962	369.9
	6	2.573	354.3	2.317	344.9	2.573	363.9	2.829	385.2	3.085	388.5
	7	2.697	388.1	2.440	363.5	2.697	382.8	2.953	404.4	3.209	407.7
8'	3	2.794	465.8	3.017	431.4	3.351	461.5	3.797	466.4	4.242	447.4
	4	2.933	486.0	3.156	450.3	3.490	480.7	3.936	485.6	4.381	465.6
	5	3.072	499.5	3.295	462.5	3.629	493.2	4.075	498.1	4.520	504.1
	6	3.211	518.8	3.434	481.3	3.768	512.4	4.213	517.3	4.659	523.3
	7	3.350	541.0	3.573	500.2	3.907	531.6	4.352	536.5	4.798	542.5
	8	3.489	581.0	3.712	539.7	4.046	544.2	4.491	549.1	4.937	555.0
10'	3	3.737	542.2	4.291	564.9	4.985	605.5	5.539	611.2	6.094	655.6
	4	3.907	561.5	4.461	615.2	5.154	624.3	5.709	630.1	6.263	674.8
	5	4.076	578.5	4.631	595.5	5.324	636.5	5.879	642.3	6.433	687.3
	6	4.246	597.7	4.801	648.2	5.494	655.4	6.048	661.2	6.603	706.5
	7	4.416	632.1	4.970	667.1	5.664	674.3	6.218	680.0	6.773	725.7
	8	4.586	645.2	5.140	679.3	5.833	686.5	6.388	692.2	6.942	738.2
	9	4.755	698.3	5.310	698.2	6.003	705.4	6.558	711.1	7.112	757.4
	10	4.925	717.3	5.480	717.1	6.173	724.9	6.727	730.0	7.282	777.8
12'	8	6.123	819.9	6.953	831.8	7.948	860.9	8.778	895.4	9.607	907.0
	9	6.324	826.6	7.153	851.6	8.149	879.5	8.978	915.6	9.808	927.2
	10	6.524	846.1	7.354	871.4	8.349	931.2	9.179	935.8	10.008	947.3
	11	6.725	926.2	7.555	901.1	8.550	944.7	9.379	954.4	10.209	960.8
	12	6.926	947.3	7.755	954.2	8.751	964.9	9.580	988.5	10.409	1032.1

FIVE BARREL

Span 'S'	Height 'H'	Table I Concrete C.Y.	Table I Reinf. Steel Lbs.	Table II Concrete C.Y.	Table II Reinf. Steel Lbs.	Table III Concrete C.Y.	Table III Reinf. Steel Lbs.	Table IV Concrete C.Y.	Table IV Reinf. Steel Lbs.	Table V Concrete C.Y.	Table V Reinf. Steel Lbs.
6'	3	2.718	369.1	2.400	364.3	2.718	386.4	3.036	411.2	3.354	421.8
	4	2.866	391.1	2.548	386.3	2.866	408.7	3.184	433.9	3.502	443.4
	5	3.014	405.1	2.697	400.3	3.014	423.0	3.332	448.5	3.650	457.0
	6	3.163	427.1	2.845	422.3	3.163	445.3	3.480	471.1	3.798	475.1
	7	3.311	467.6	2.993	444.3	3.311	467.6	3.629	493.7	3.947	497.7
8'	3	3.454	567.4	3.731	535.9	4.146	573.2	4.700	578.9	5.253	557.7
	4	3.621	591.0	3.898	558.1	4.313	595.9	4.866	601.5	5.420	579.3
	5	3.788	606.6	4.064	572.4	4.479	610.5	5.033	616.1	5.586	623.2
	6	3.954	630.2	4.231	594.7	4.646	633.1	5.200	638.8	5.753	645.8
	7	4.121	661.4	4.398	617.0	4.813	655.7	5.366	661.4	5.920	668.4
	8	4.288	702.8	4.564	664.8	4.979	670.3	5.533	676.0	6.086	683.0
10'	3	4.623	685.6	5.140	705.8	6.174	756.5	6.863	763.1	7.552	820.4
	4	4.827	708.3	5.516	768.0	6.378	778.8	7.067	785.4	7.756	843.0
	5	5.030	730.0	5.720	741.9	6.581	793.0	7.271	799.6	7.960	857.6
	6	5.234	752.6	5.923	806.5	6.785	815.3	7.474	821.9	8.164	880.2
	7	5.438	792.7	6.127	828.8	6.989	837.6	7.678	844.2	8.367	902.8
	8	5.641	808.0	6.331	843.1	7.192	851.9	7.882	858.5	8.571	917.4
	9	5.845	872.4	6.534	865.4	7.396	874.2	8.085	880.8	8.775	940.1
	10	6.049	894.1	6.738	887.7	7.600	896.5	8.289	903.1	8.978	963.9
12'	8	7.544	1025.0	8.575	1031.1	9.815	1072.9	10.844	1109.2	11.876	1122.1
	9	7.784	1037.5	8.816	1054.4	10.053	1095.0	11.085	1132.8	12.116	1145.7
	10	8.025	1060.4	9.057	1077.6	10.294	1150.9	11.326	1156.4	12.357	1169.3
	11	8.266	1151.9	9.297	1120.8	10.535	1166.5	11.566	1177.1	12.598	1184.9
	12	8.507	1176.3	9.538	1178.5	10.776	1190.1	11.807	1227.3	12.838	1269.7

SIX BARREL

Span 'S'	Height 'H'	Table I Concrete C.Y.	Table I Reinf. Steel Lbs.	Table II Concrete C.Y.	Table II Reinf. Steel Lbs.	Table III Concrete C.Y.	Table III Reinf. Steel Lbs.	Table IV Concrete C.Y.	Table IV Reinf. Steel Lbs.	Table V Concrete C.Y.	Table V Reinf. Steel Lbs.
6'	3	3.234	431.8	2.854	415.4	3.234	439.6	3.613	467.0	3.993	481.4
	4	3.406	457.2	3.027	440.9	3.406	465.3	3.786	493.0	4.166	506.4
	5	3.579	473.3	3.200	457.0	3.579	481.7	3.959	509.7	4.338	522.1
	6	3.752	498.8	3.372	482.4	3.752	507.4	4.132	535.7	4.511	541.3
	7	3.925	545.3	3.545	507.9	3.925	533.1	4.305	561.8	4.684	567.3
8'	3	4.114	679.4	4.445	609.6	4.941	650.2	5.602	656.3	6.264	634.1
	4	4.308	706.4	4.639	635.3	5.135	676.2	5.797	682.4	6.458	659.1
	5	4.503	724.0	4.834	651.7	5.330	692.9	5.991	699.1	6.653	709.0
	6	4.697	751.1	5.028	677.4	5.524	718.9	6.186	725.1	6.847	735.1
	7	4.892	790.1	5.222	703.1	5.719	745.0	6.380	751.2	7.042	761.1
	8	5.086	834.3	5.417	756.6	5.913	761.7	6.575	767.8	7.236	777.8
10'	3	5.509	816.5	6.333	801.8	7.363	857.8	8.187	864.3	9.011	926.5
	4	5.747	842.6	6.571	873.6	7.601	883.5	8.425	890.0	9.249	952.6
	5	5.984	868.7	6.808	843.3	7.838	899.9	8.663	906.4	9.487	969.3
	6	6.222	894.7	7.046	916.3	8.076	925.6	8.900	932.1	9.724	995.3
	7	6.460	939.5	7.284	942.1	8.314	951.3	9.138	957.8	9.962	1021.3
	8	6.697	956.9	7.521	958.4	8.551	967.7	9.376	974.2	10.200	1038.0
	9	6.935	1032.7	7.759	984.1	8.789	993.4	9.613	999.9	10.437	1064.1
	10	7.173	1056.3	7.997	1009.9	9.027	1019.8	9.851	1025.6	10.675	1091.3
12'	8	8.964	1208.2	10.198	1172.8	11.677	1220.8	12.911	1257.4	14.144	1270.0
	9	9.245	1225.6	10.478	1199.5	11.958	1246.3	13.192	1284.4	14.425	1297.1
	10	9.526	1252.0	10.759	1226.2	12.239	1305.6	13.472	1311.4	14.706	1324.1
	11	9.807	1354.6	11.040	1277.5	12.520	1323.3	13.753	1334.3	14.987	1341.0
	12	10.088	1382.5	11.321	1339.2	12.801	1350.3	14.034	1395.4	15.267	1440.3

NOTE:
Quantities shown in tables are per lin. foot of culvert length.

NO	DESCRIPTION OF REVISIONS	MADE BY	DATE
1			
2			
3			
4			

DESIGN
DRAWN
CHECKED

CADD FILENAME= ZFA
VIEW NAME=

Registered Professional Engineer (Civil) CERTIFICATE NO. 9910 T. DANIEL DAVIS Date Signed Arizona U.S.A.

DESIGN APPROVED
T. D. Davis

APPROVED FOR DISTRIBUTION
T. A. Bryant, Jr.

ARIZONA
DEPARTMENT OF TRANSPORTATION
HIGHWAYS DIVISION
STANDARD DRAWINGS

CULVERT QUANTITIES

REVISION

STANDARD NO.
B-02.70

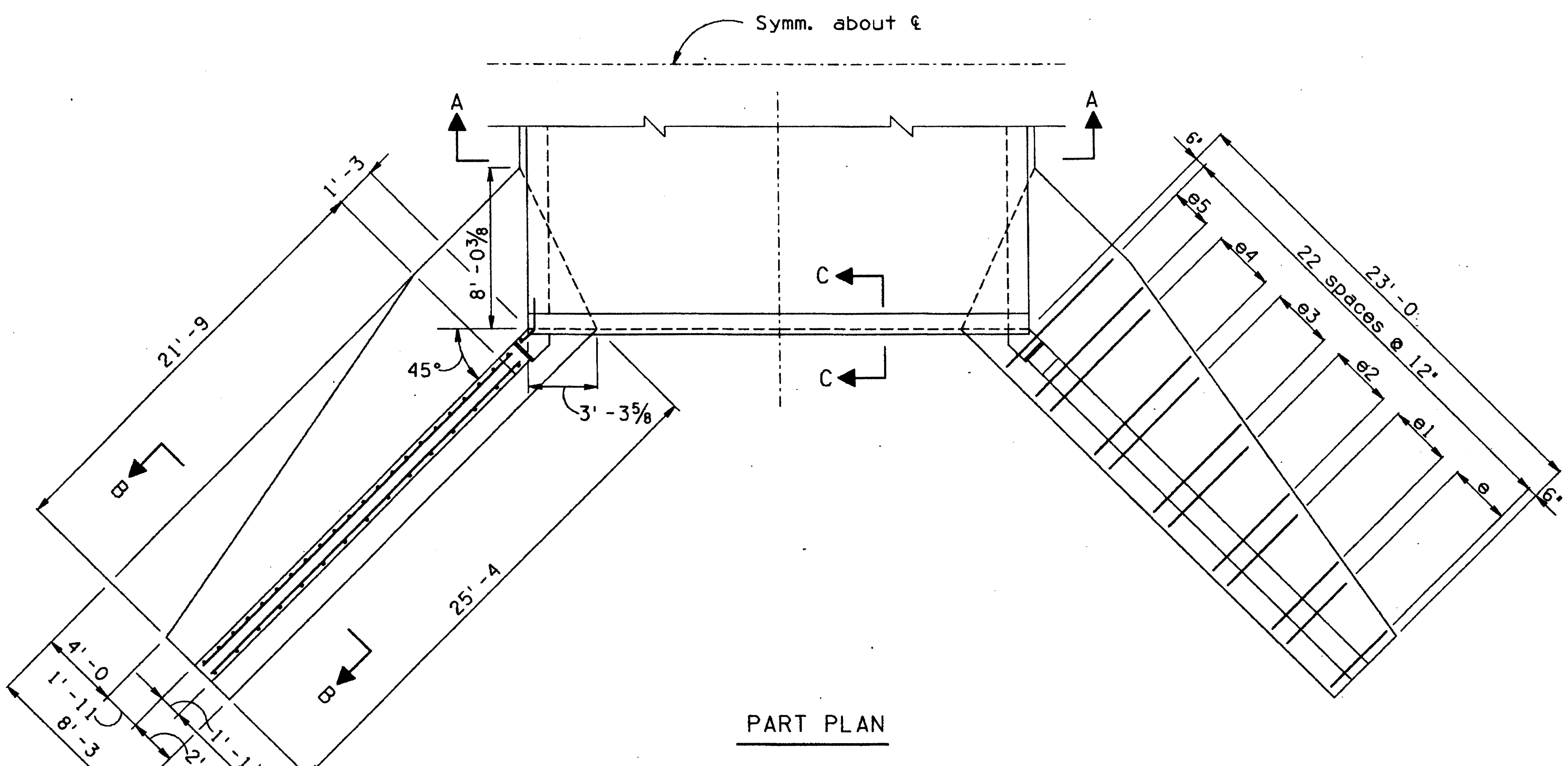

PART PLAN

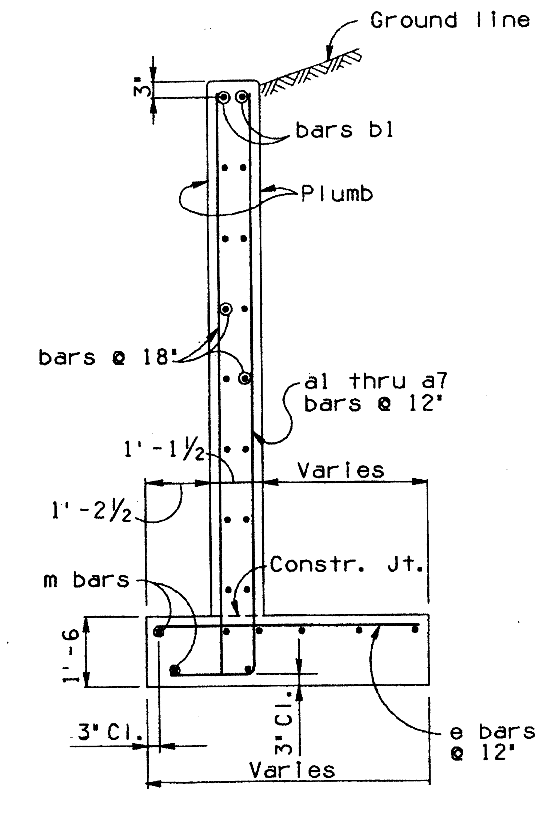

SECTION B-B

BARREL STEEL LIST					
FILL		TABLE I 0' to 5'	TABLE II 5' to 10'	TABLE III 10' to 15'	TABLE IV 15' to 20'
Slab (T)		14½"	17"	20"	22"
Walls (W)		12"	13"	14"	16"
Bars aa(spa)		12"	11"	10½"	6"
Bars cc(No.)		56	56	56	56
Bars ee	Size	#10	#9	#10	#10
	Spacing	9"	6"	7"	6½"
	Length	17'-8	17'-10	18'-0	18'-4
Bars gg (No.)		38	24	24	24
Bars hh	Size	#7	#8	#7	#7
	Spacing	9"	8½"	8½"	8½"
	Length	12'-10	13'-10	13'-4	13'-9"
	F	4'-1	4'-10	4'-1	4'-4
BARREL QUANTITIES					
Steel #/Lf		439	541	511	570
Conc. CY/Lf		2.687	3.074	3.524	3.972

HEAD WALL STEEL LIST									
Mark	Bend	Size	No.	Lgth.	Mark	Bend	Size	No.	Lgth.
a	A	#5	6	10'-9	b	B	#4	20	2'-9
a1	A	#5	6	11'-9	b1	str.	#6	4	22'-9
a2	A	#5	6	12'-9	b2	str.	#4	20	21'-6
a3	A	#6	6	13'-9	b3	str.	#4	4	18'-6
a4	A	#6	6	14'-9	b4	str.	#4	4	14'-6
a5	A	#6	6	16'-0	b5	str.	#4	4	10'-6
a6	A	#6	6	17'-0	b6	str.	#4	4	6'-0
a7	A	#7	4	18'-3	e	str.	#5	8	3'-9
a8	str.	#8	16	7'-3	e1	str.	#5	8	4'-6
a9	str.	#6	16	5'-3	e2	str.	#6	8	5'-3
a10	str.	#4	6	8'-9	e3	str.	#7	8	6'-0
a11	str.	#4	6	10'-3	e4	str.	#8	8	6'-9
a12	str.	#4	6	11'-9	e5	str.	#9	6	7'-3
a13	str.	#4	6	13'-3	CURB				
a14	str.	#4	6	15'-0	h	str.	#8	4	17'-6
m	str.	#4	16	22'-6	J	J	#4	12	4'-4
HEAD WALL QUANTITIES									
Steel									3173 Lbs
Conc.									41.5 CY

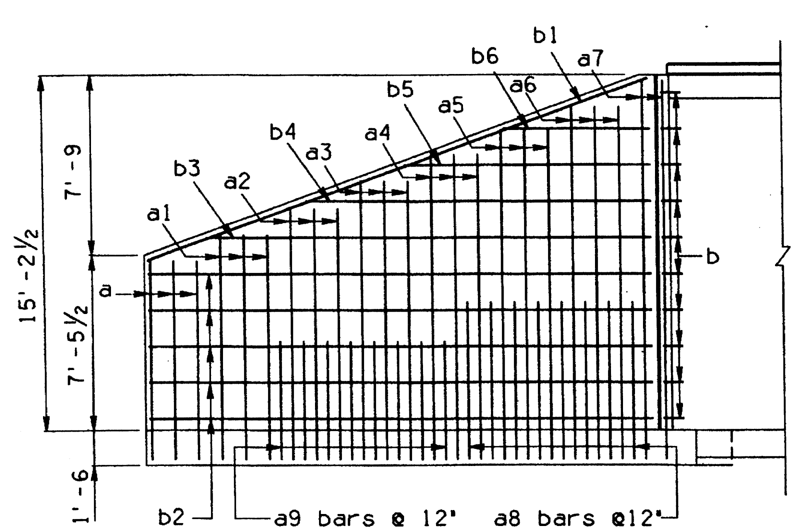

WING ELEVATION
(Back Face Reinf.)

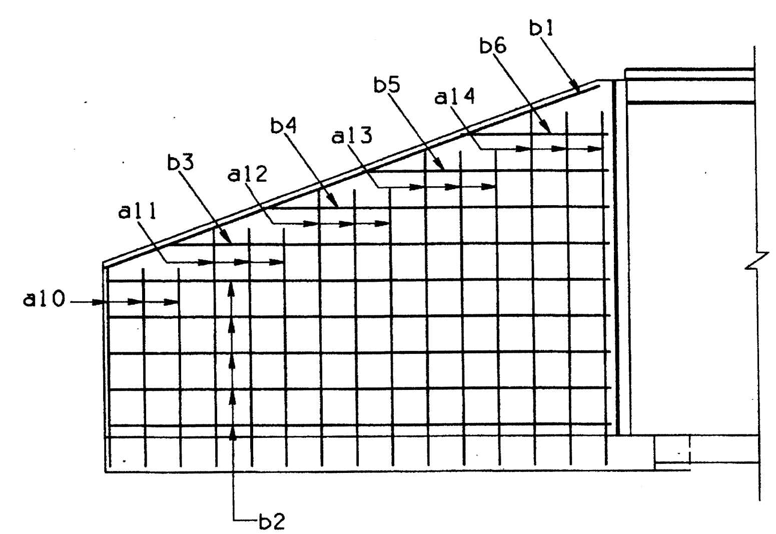

WING ELEVATION
(Front Face Reinf.)

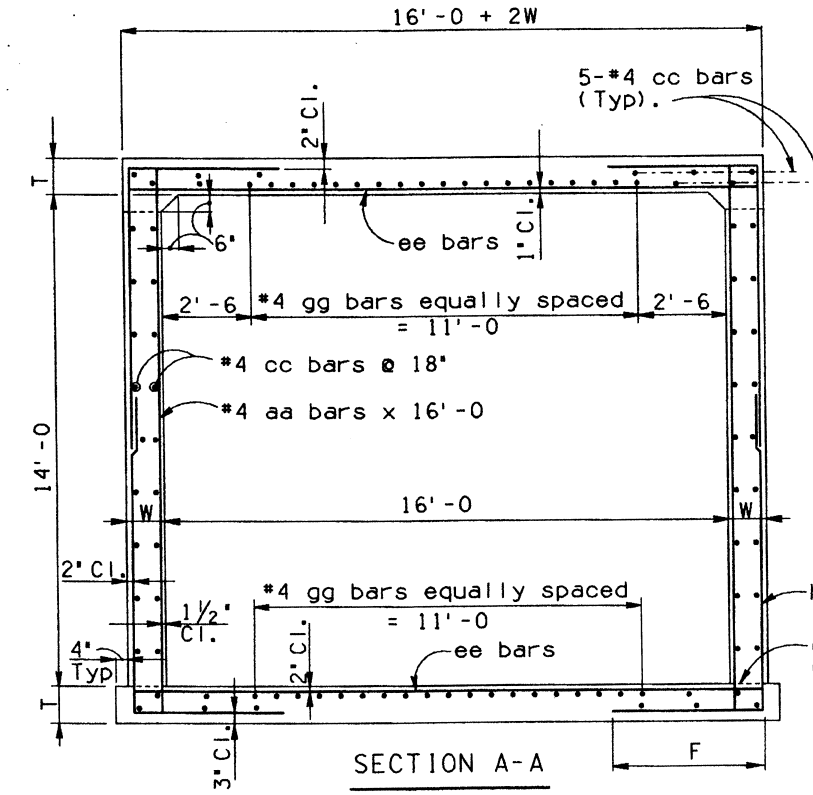

SECTION A-A

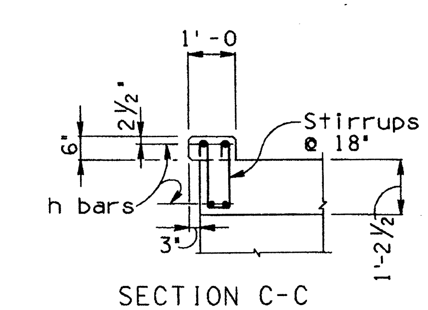

SECTION C-C

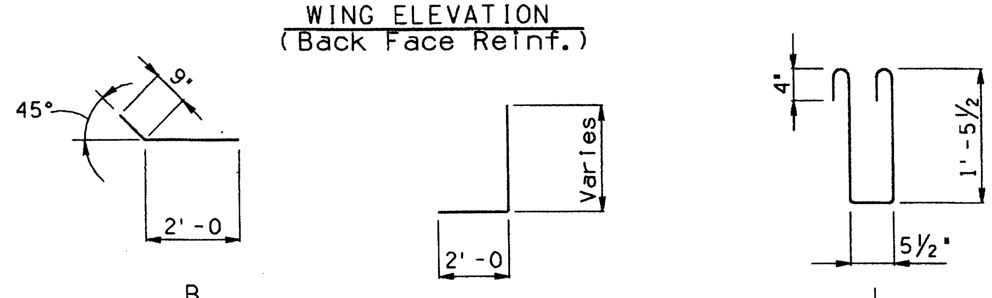

BENDS

NOTE:
For General Notes and Miscellaneous Details, see Std. B-01.10.
Use Table No. I next to headwall.

NO	DESCRIPTION OF REVISIONS	MADE BY	DATE
1	Redesigned box	C.H.	6-88
2			
3			
4			

DESIGN
DRAWN
CHECKED

Registered Professional Engineer (Civil) Certificate No. 9910 F. DANIEL DAVIS Date Signed 8-1-88 Arizona U.S.A.	DESIGN APPROVED J. D. Davis	ARIZONA DEPARTMENT OF TRANSPORTATION HIGHWAYS DIVISION STANDARD DRAWINGS	REVISION 7-88
	APPROVED FOR DISTRIBUTION T. A. Bryant, II.	16' x 14' EQUIPMENT PASS	STANDARD NO. B-03.10

CADD FILENAME= ZFA
VIEW NAME=

Skew ∡	Θ_1	Θ_2
0°	70°	70°
5°	75°	65°
10°	80°	60°
15°	85°	55°
20°	90°	50°

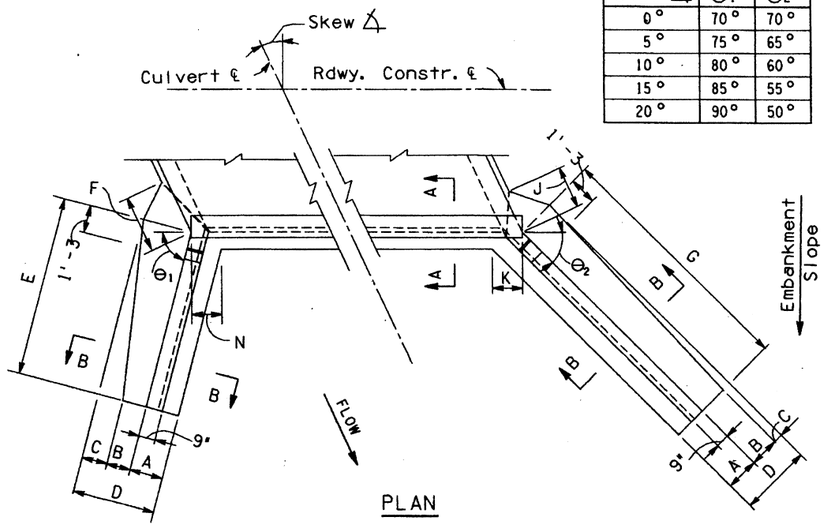

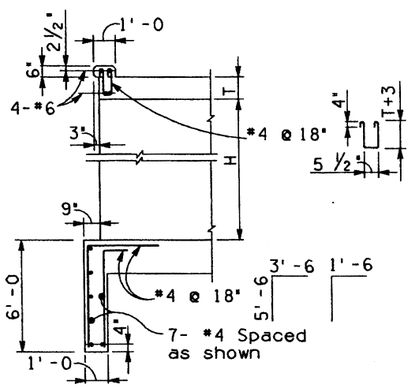

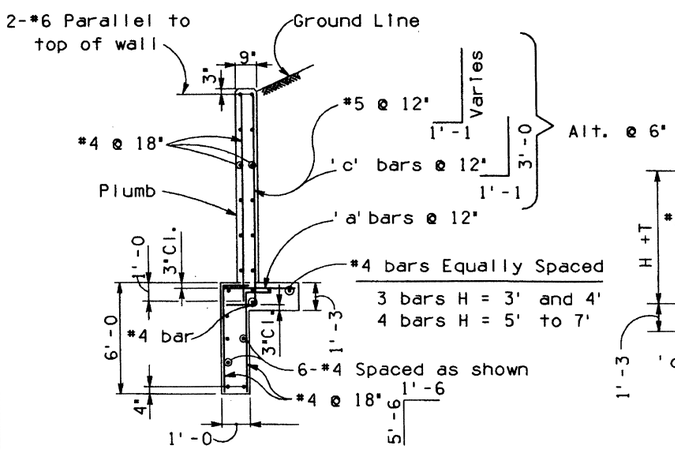

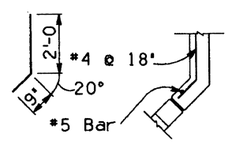

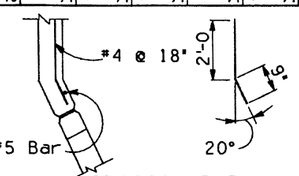

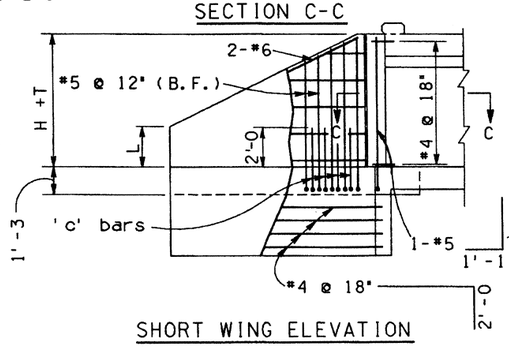

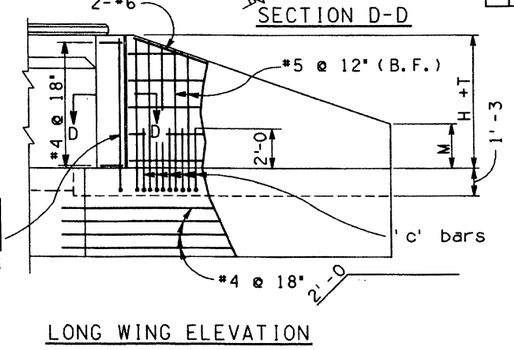

	Skew ∡	0°					5°					10°					15°					20°				
	Height H	3'	4'	5'	6'	7'	3'	4'	5'	6'	7'	3'	4'	5'	6'	7'	3'	4'	5'	6'	7'	3'	4'	5'	6'	7'
2 : 1 Slope Dimensions	A	1'-6	1'-6	1'-6	1'-6	1'-6	1'-6	1'-6	1'-6	1'-6	1'-6	1'-6	1'-6	1'-6	1'-6	1'-6	1'-6	1'-6	1'-6	1'-6	1'-6	1'-6	1'-6	1'-6	1'-6	1'-6
	B	9"	1'-0	1'-1	1'-2	1'-3	9"	1'-0	1'-1	1'-2	1'-3	9"	1'-0	1'-1	1'-2	1'-3	9"	1'-0	1'-1	1'-2	1'-3	9"	1'-0	1'-1	1'-2	1'-3
	C	4"	7"	1'-0	1'-5	1'-10	4"	7"	1'-0	1'-5	1'-10	5"	8"	1'-1	1'-6	1'-11	5"	8"	1'-1	1'-7	2'-0	6"	9"	1'-2	1'-7	2'-1
	D	2'-7	3'-1	3'-7	4'-1	4'-7	2'-7	3'-1	3'-7	4'-1	4'-7	2'-8	3'-2	3'-8	4'-2	4'-8	2'-8	3'-2	3'-8	4'-3	4'-9	2'-9	3'-3	3'-9	4'-3	4'-10
	E	6'-6	8'-0	9'-6	11'-0	12'-6	6'-6	8'-0	9'-6	11'-0	12'-6	6'-6	8'-0	9'-6	11'-0	12'-6	6'-0	7'-6	9'-0	10'-6	12'-0	6'-0	7'-6	9'-0	10'-6	12'-0
	F	1'-1	1'-9	2'-4	3'-0	3'-8	1'-1	1'-9	2'-4	3'-0	3'-8	1'-2	1'-10	2'-6	3'-1	3'-9	1'-2	1'-10	2'-6	3'-3	3'-10	1'-3	1'-11	2'-7	3'-3	4'-0
	G	6'-6	8'-0	9'-6	11'-0	12'-6	6'-6	8'-0	10'-0	11'-6	13'-0	7'-0	8'-6	10'-0	12'-0	13'-6	7'-0	9'-0	10'-6	12'-6	14'-0	7'-6	9'-6	11'-0	13'-0	14'-6
	J	1'-1	1'-9	2'-4	3'-0	3'-8	1'-1	1'-9	2'-4	3'-0	3'-8	1'-2	1'-10	2'-6	3'-1	3'-9	1'-2	1'-10	2'-6	3'-3	3'-10	1'-3	1'-11	2'-7	3'-3	4'-0
	K	1'-3⅞	1'-3⅞	1'-3⅞	1'-3⅞	1'-3⅞	1'-3⅝	1'-3⅝	1'-3⅝	1'-3⅝	1'-3⅝	1'-3⅝	1'-3⅝	1'-3⅝	1'-3⅝	1'-3⅝	1'-3⅝	1'-3⅝	1'-3⅝	1'-3⅝	1'-3⅝	1'-4	1'-4	1'-4	1'-4	1'-4
	L	1'-0	1'-4	1'-7	1'-11	2'-2	11"	1'-2	1'-6	1'-9	2'-0	10"	1'-1	1'-5	1'-8	1'-11	1'-1	1'-4	1'-7	1'-10	2'-1	1'-1	1'-4	1'-7	1'-10	2'-1
	M	1'-0	1'-4	1'-7	1'-11	2'-2	1'-1	1'-5	1'-6	1'-10	2'-2	1'-0	1'-5	1'-9	1'-10	2'-3	1'-2	1'-5	1'-9	1'-11	2'-4	1'-2	1'-5	1'-10	2'-1	2'-6
	N	1'-3⅞	1'-3⅞	1'-3⅞	1'-3⅞	1'-3⅞	1'-4¼	1'-4¼	1'-4¼	1'-4¼	1'-¼	1'-4¾	1'-4¾	1'-4¾	1'-4¾	1'-4¾	1'-5¼	1'-5¼	1'-5¼	1'-5¼	1'-5¼	1'-6	1'-6	1'-6	1'-6	1'-6

	Skew ∡	0°					5°					10°					15°					20°				
	Height H	3'	4'	5'	6'	7'	3'	4'	5'	6'	7'	3'	4'	5'	6'	7'	3'	4'	5'	6'	7'	3'	4'	5'	6'	7'
4 : 1 Slope Dimensions	A	1'-6	1'-6	1'-6	1'-6	1'-6	1'-6	1'-6	1'-6	1'-6	1'-6	1'-6	1'-6	1'-6	1'-6	1'-6	1'-6	1'-6	1'-6	1'-6	1'-6	1'-6	1'-6	1'-6	1'-6	1'-6
	B	9"	1'-0	1'-1	1'-2	1'-3	9"	1'-0	1'-1	1'-2	1'-3	9"	1'-0	1'-1	1'-2	1'-3	9"	1'-0	1'-1	1'-2	1'-3	9"	1'-0	1'-1	1'-2	1'-3
	C	4"	6"	11"	1'-4	1'-8	3"	6"	11"	1'-4	1'-9	3"	6'	11"	1'-4	1'-9	3"	6"	11"	1'-4	1'-9	3"	7"	1'-0	1'-5	1'-10
	D	2'-7	3'-0	3'-6	4'-0	4'-5	2'-6	3'-0	3'-6	4'-0	4'-6	2'-6	3'-0	3'-6	4'-0	4'-6	2'-6	3'-0	3'-6	4'-0	4'-6	2'-6	3'-1	3'-7	4'-1	4'-7
	E	10'-0	12'-6	15'-0	17'-6	20'-0	10'-0	12'-6	15'-0	17'-0	19'-6	10'-0	12'-6	14'-6	17'-0	19'-6	10'-0	12'-0	14'-6	17'-0	19'-6	10'-0	12'-0	14'-6	17'-0	19'-6
	F	1'-0	1'-7	2'-3	2'-11	3'-5	1'-0	1'-7	2'-3	2'-11	3'-6	1'-0	1'-7	2'-3	2'-11	3'-6	1'-0	1'-7	2'-3	2'-11	3'-6	1'-0	1'-9	2'-4	3'-0	3'-8
	G	10'-0	12'-6	15'-0	17'-6	20'-0	10'-6	13'-0	15'-6	18'-0	20'-6	10'-6	13'-0	16'-0	18'-6	21'-0	11'-0	13'-6	16'-0	19'-0	21'-6	11'-6	14'-0	17'-0	19'-6	22'-6
	J	1'-0	1'-7	2'-3	2'-11	3'-5	1'-0	1'-7	2'-3	2'-11	3'-6	1'-0	1'-7	2'-3	2'-11	3'-6	1'-0	1'-7	2'-3	2'-11	3'-6	1'-0	1'-9	2'-4	3'-0	3'-8
	K	1'-3⅞	1'-3⅞	1'-3⅞	1'-3⅞	1'-3⅞	1'-3⅝	1'-3⅝	1'-3⅝	1'-3⅝	1'-3⅝	1'-3⅝	1'-3⅝	1'-3⅝	1'-3⅝	1'-3⅝	1'-3⅝	1'-3⅝	1'-3⅝	1'-3⅝	1'-3⅝	1'-4	1'-4	1'-4	1'-4	1'-4
	L	1'-9	2'-2	2'-6	2'-11	3'-4	1'-8	2'-1	2'-5	2'-11	3'-4	1'-7	2'-0	2'-6	2'-11	3'-3	1'-7	2'-1	2'-5	2'-10	3'-2	1'-7	2'-1	2'-5	2'-10	3'-2
	M	1'-9	2'-2	2'-6	2'-11	3'-4	1'-8	2'-1	2'-7	3'-0	3'-5	1'-9	2'-3	2'-7	3'-1	3'-6	1'-10	2'-4	2'-9	3'-2	3'-8	1'-10	2'-5	2'-10	3'-4	3'-9
	N	1'-3⅞	1'-3⅞	1'-3⅞	1'-3⅞	1'-3⅞	1'-4¼	1'-4¼	1'-4¼	1'-4¼	1'-4¼	1'-4¾	1'-4¾	1'-4¾	1'-4¾	1'-4¾	1'-5¼	1'-5¼	1'-5¼	1'-5¼	1'-5¼	1'-6	1'-6	1'-6	1'-6	1'-6

	Skew ∡	0°					5°					10°					15°					20°				
	Height H	3'	4'	5'	6'	7'	3'	4'	5'	6'	7'	3'	4'	5'	6'	7'	3'	4'	5'	6'	7'	3'	4'	5'	6'	7'
6 : 1 Slope Dimensions	A	1'-6	1'-6	1'-6	1'-6	1'-6	1'-6	1'-6	1'-6	1'-6	1'-6	1'-6	1'-6	1'-6	1'-6	1'-6	1'-6	1'-6	1'-6	1'-6	1'-6	1'-6	1'-6	1'-6	1'-6	1'-6
	B	9"	1'-0	1'-1	1'-2	1'-3	9"	1'-0	1'-1	1'-2	1'-3	9"	1'-0	1'-1	1'-2	1'-3	9"	1'-0	1'-1	1'-2	1'-3	9"	1'-0	1'-1	1'-2	1'-3
	C	3"	6"	11"	1'-4	1'-8	3"	6"	11"	1'-4	1'-8	3"	6"	11"	1'-4	1'-8	3"	6"	11"	1'-4	1'-9	3"	6"	11"	1'-4	1'-9
	D	2'-6	3'-0	3'-6	4'-0	4'-5	2'-6	3'-0	3'-6	4'-0	4'-5	2'-6	3'-0	3'-6	4'-0	4'-5	2'-6	3'-0	3'-6	4'-0	4'-6	2'-6	3'-0	3'-6	4'-0	4'-6
	E	12'-6	15'-6	18'-6	21'-6	24'-6	12'-6	15'-6	18'-6	21'-6	24'-6	12'-0	15'-0	18'-0	21'-0	24'-0	12'-0	15'-0	18'-0	21'-0	24'-0	12'-0	15'-0	18'-0	21'-0	24'-0
	F	1'-0	1'-7	2'-3	2'-11	3'-5	1-0	1'-7	2'-3	2'-11	3'-5	1'-0	1'-7	2'-3	2'-11	3'-5	1'-0	1'-7	2'-3	2'-11	3'-6	1'-0	1'-7	2'-3	2'-11	3'-6
	G	12'-6	15'-6	18'-6	21'-6	24'-6	12'-6	16'-0	19'-0	22'-0	25'-0	13'-0	16'-0	19'-6	22'-6	25'-6	13'-6	16'-6	20'-0	23'-0	26'-6	13'-6	17'-0	20'-6	23'-6	27'-0
	J	1'-0	1'-7	2'-3	2'-11	3'-5	1'-0	1'-7	2'-3	2'-11	3'-5	1'-0	1'-7	2'-3	2'-11	3'-5	1'-0	1'-7	2'-3	2'-11	3'-6	1'-0	1'-7	2'-3	2'-11	3'-6
	K	1'-3⅞	1'-3⅞	1'-3⅞	1'-3⅞	1'-3⅞	1'-3⅝	1'-3⅝	1'-3⅝	1'-3⅝	1'-3⅝	1'-3⅝	1'-3⅝	1'-3⅝	1'-3⅝	1'-3⅝	1'-3⅝	1'-3⅝	1'-3⅝	1'-3⅝	1'-3⅝	1'-4	1'-4	1'-4	1'-4	1'-4
	L	2'-1	2'-8	3'-2	3'-8	4'-3	2'-1	2'-7	3'-1	3'-7	4'-1	2'-1	2'-7	3'-1	3'-7	4'-1	2'-1	2'-7	3'-1	3'-7	4'-1	2'-1	2'-7	3'-1	3'-7	4'-1
	M	2'-1	2'-8	3'-2	3'-8	4'-3	2'-2	2'-8	3'-2	3'-9	4'-3	2'-2	2'-9	3'-3	3'-10	4'-5	2'-3	2'-10	3'-4	3'-11	4'-5	2'-4	2'-11	3'-5	4'-1	4'-7
	N	1'-3⅞	1'-3⅞	1'-3⅞	1'-3⅞	1'-3⅞	1'-4¼	1'-4¼	1'-4¼	1'-4¼	1'-4¼	1'-4¾	1'-4¾	1'-4¾	1'-4¾	1'-4¾	1'-5¼	1'-5¼	1'-5¼	1'-5¼	1'-5¼	1'-6	1'-6	1'-6	1'-6	1'-6

'c' bars			
Hgt. H	Slope	Short Wing	Long Wing
		0° to 10°	0° to 20°
7'	2 : 1	3 - #5	3 - #5
	4 : 1	5 - #5	5 - #5

'a' bars			
Height H	Short Wing	Long Wing	
	0° to 20°	0° & 5°	10° to 20°
3'	#4	#4	#4
4'	#4	#4	#4
5'	#4	#4	#4
6'	#4	#4	#5
7'	#4	#4	#6

NOTE :

For General Notes and Miscellaneous Details see B-01.10.
For Headwall Quantities see B-05.10, B-05.20 and B-05.30.

NO	DESCRIPTION OF REVISIONS	MADE BY	DATE
1	Revised cutoff wall	J.M.	6-88
2			
3			
4			

DESIGN
DRAWN
CHECKED

CADD FILENAME= ZFA
VIEW NAME=

DESIGN APPROVED
F.D. Davis

APPROVED FOR DISTRIBUTION
T.A. Bryant, II.

ARIZONA
DEPARTMENT OF TRANSPORTATION
HIGHWAYS DIVISION
STANDARD DRAWINGS

OUTLET WINGS
CULVERT HEIGHT 3' to 7'
SKEW 0° to 20°

REVISION 7-88

STANDARD NO. B-04.10

Skew ∡	Θ_1	Θ_2
0°	70°	70°
5°	75°	65°
10°	80°	60°
15°	85°	55°
20°	90°	50°

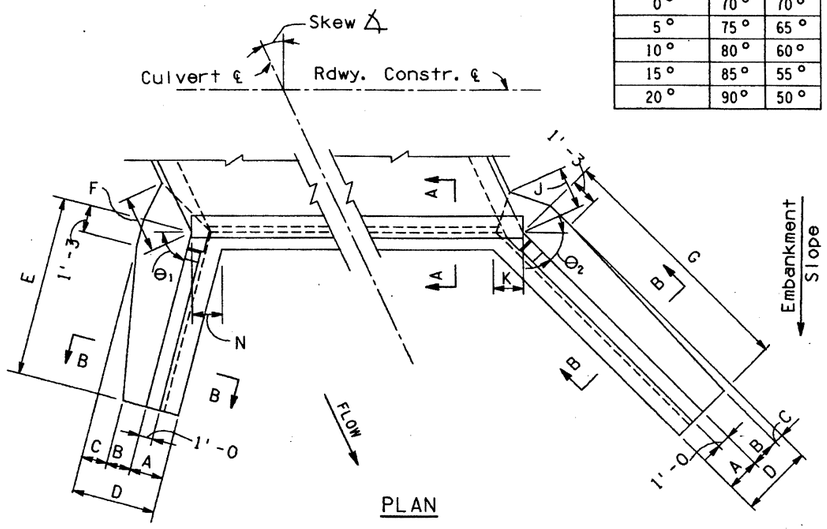

PLAN

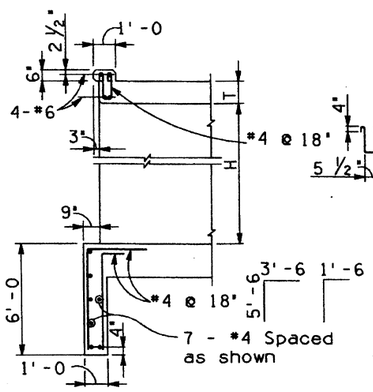

SECTION A-A

Skew ∡	0°					5°					10°					15°					20°				
Height H	8'	9'	10'	11'	12'	8'	9'	10'	11'	12'	8'	9'	10'	11'	12'	8'	9'	10'	11'	12'	8'	9'	10'	11'	12'
2 : 1 Slope Dimensions A	2'-0	2'-1	2'-2	2'-3	2'-4	2'-0	2'-1	2'-2	2'-3	2'-4	2'-0	2'-1	2'-2	2'-3	2'-4	2'-0	2'-1	2'-2	2'-3	2'-4	2'-0	2'-1	2'-2	2'-3	2'-4
B	1'-4	1'-5	1'-6	1'-7	1'-8	1'-4	1'-5	1'-6	1'-7	1'-8	1'-4	1'-5	1'-6	1'-7	1'-8	1'-4	1'-5	1'-6	1'-7	1'-8	1'-4	1'-5	1'-6	1'-7	1'-8
C	1'-10	2'-2	2'-6	3'-0	3'-8	1'-11	2'-3	2'-7	3'-2	3'-10	1'-11	2'-4	2'-8	3'-3	4'-0	2'-0	2'-5	2'-9	3'-5	4'-1	2'-1	2'-6	2'-10	3'-6	4'-3
D	5'-2	5'-8	6'-2	6'-10	7'-8	5'-3	5'-9	6'-3	7'-0	7'-10	5'-3	5'-10	6'-4	7'-1	8'-0	5'-4	5'-11	6'-5	7'-3	8'-1	5'-5	6'-0	6'-6	7'-4	8'-3
E	14'-6	16'-0	17'-6	19'-0	20'-6	14'-0	15'-6	17'-0	18'-6	20'-0	14'-0	15'-6	17'-0	18'-6	20'-0	13'-6	15'-0	16'-6	18'-0	19'-6	13'-6	15'-0	16'-6	18'-0	19'-6
F	3'-9	4'-3	4'-10	5'-7	6'-6	3'-10	4'-5	4'-11	5'-9	6'-9	3'-10	4'-6	5'-0	5'-11	6'-11	4'-0	4'-7	5'-2	6'-1	7'-1	4'-1	4'-9	5'-3	6'-2	7'-3
G	14'-6	16'-0	17'-6	19'-0	20'-6	14'-6	16'-6	18'-0	19'-6	21'-0	15'-0	17'-0	18'-6	20'-0	22'-0	15'-6	17'-6	19'-0	21'-0	22'-6	16'-6	18'-6	20'-0	22'-0	23'-6
J	3'-9	4'-3	4'-10	5'-7	6'-6	3'-10	4'-5	4'-11	5'-9	6'-9	3'-10	4'-6	5'-0	5'-11	6'-11	4'-0	4'-7	5'-2	6'-1	7'-1	4'-1	4'-9	5'-3	6'-2	7'-3
K	1'-10¼	1'-11⅜	2'-0⅜	2'-1½	2'-2½	1'-10¼	1'-11⅜	2'-0½	2'-1⅝	2'-2¾	1'-10½	1'-11⅝	2'-0⅞	2'-2	2'-3⅛	1'-11	2'-0¼	2'-1½	2'-2⅝	2'-3⅞	1'-11¾	2'-1⅛	2'-2⅜	2'-3¾	2'-5
L	2'-3	2'-7	2'-10	3'-2	3'-5	2'-4	2'-7	2'-10	3'-2	3'-5	2'-2	2'-5	2'-8	2'-11	3'-3	2'-4	2'-7	2'-10	3'-1	3'-4	2'-4	2'-7	2'-10	3'-1	3'-4
M	2'-3	2'-7	2'-10	3'-2	3'-5	2'-6	2'-7	2'-11	3'-3	3'-7	2'-7	2'-8	3'-1	3'-5	3'-6	2'-9	2'-11	3'-3	3'-6	3'-10	2'-9	3'-0	3'-5	3'-8	4'-1
N	1'-10¼	1'-11⅜	2'-0⅜	2'-1½	2'-2½	1'-10½	1'-11½	2'-0½	2'-1½	2'-2⅝	1'-10¾	1'-11¾	2'-0⅞	2'-1⅞	2'-2⅞	1'-11¼	2'-0¼	2'-1¼	2'-2⅜	2'-3⅜	2'-0	2'-1	2'-2	2'-3	2'-4

Skew ∡	0°					5°					10°					15°					20°				
Height H	8'	9'	10'	11'	12'	8'	9'	10'	11'	12'	8'	9'	10'	11'	12'	8'	9'	10'	11'	12'	8'	9'	10'	11'	12'
4 : 1 Slope Dimensions A	2'-0	2'-1	2'-2	2'-3	2'-4	2'-0	2'-1	2'-2	2'-3	2'-4	2'-0	2'-1	2'-2	2'-3	2'-4	2'-0	2'-1	2'-2	2'-3	2'-4	2'-0	2'-1	2'-2	2'-3	2'-4
B	1'-4	1'-5	1'-6	1'-7	1'-8	1'-4	1'-5	1'-6	1'-7	1'-8	1'-4	1'-5	1'-6	1'-7	1'-8	1'-4	1'-5	1'-6	1'-7	1'-8	1'-4	1'-5	1'-6	1'-7	1'-8
C	1'-8	2'-0	2'-4	2'-10	3'-6	1'-9	2'-1	2'-5	2'-11	3'-6	1'-9	2'-1	2'-5	2'-11	3'-7	1'-9	2'-1	2'-5	3'-0	3'-8	1'-10	2'-2	2'-6	3'-0	3'-8
D	5'-0	5'-6	6'-0	6'-8	7'-6	5'-1	5'-7	6'-1	6'-9	7'-6	5'-1	5'-7	6'-1	6'-9	7'-7	5'-1	5'-7	6'-1	6'-10	7'-8	5'-2	5'-8	6'-2	6'-10	7'-8
E	22'-6	25'-0	27'-6	30'-0	32'-6	22'-0	24'-6	27'-0	29'-6	32'-0	22'-0	24'-0	26'-6	29'-0	31'-6	21'-6	24'-0	26'-6	29'-0	31'-0	21'-6	24'-0	26'-6	29'-0	31'-0
F	3'-6	4'-1	4'-7	5'-4	6'-4	3'-8	4'-2	4'-9	5'-5	6'-4	3'-8	4'-2	4'-9	5'-5	6'-5	3'-8	4'-2	4'-9	5'-7	6'-6	3'-9	4'-3	4'-10	5'-7	6'-6
G	22'-6	25'-0	27'-6	30'-0	32'-6	23'-0	25'-6	28'-0	30'-6	33'-0	23'-6	26'-0	28'-6	31'-0	34'-0	24'-0	27'-0	29'-6	32'-0	35'-0	25'-0	28'-0	30'-6	33'-6	36'-0
J	3'-6	4'-1	4'-7	5'-4	6'-4	3'-8	4'-2	4'-9	5'-5	6'-4	3'-8	4'-2	4'-9	5'-5	6'-5	3'-8	4'-2	4'-9	5'-7	6'-6	3'-9	4'-3	4'-10	5'-7	6'-6
K	1'-10¼	1'-11⅜	2'-0⅜	2'-1½	2'-2½	1'-10¼	1'-11⅜	2'-0½	2'-1⅝	2'-2¾	1'-10½	1'-11⅝	2'-0⅞	2'-2	2'-3⅛	1'-11	2'-0¼	2'-1½	2'-2⅝	2'-3⅞	1'-11¾	2'-1⅛	2'-2⅜	2'-3¾	2'-5
L	3'-9	4'-2	4'-7	5'-0	5'-5	3'-9	4'-2	4'-7	4'-11	5'-4	3'-8	4'-2	4'-6	4'-11	5'-4	3'-9	4'-1	4'-6	4'-10	5'-4	3'-8	4'-1	4'-5	4'-10	5'-4
M	3'-9	4'-2	4'-7	5'-0	5'-5	3'-10	4'-3	4'-9	5'-2	5'-7	4'-0	4'-5	4'-11	5'-4	5'-8	4'-2	4'-6	5'-0	5'-6	5'-11	4'-3	4'-8	5'-3	5'-8	6'-2
N	1'-10¼	1'-11⅜	2'-0⅜	2'-1½	2'-2½	1'-10½	1'-11½	2'-0½	2'-1½	2'-2⅝	1'-10¾	1'-11¾	2'-0⅞	2'-1⅞	2'-2⅞	1'-11¼	2'-0¼	2'-1¼	2'-2⅜	2'-3⅜	2'-0	2'-1	2'-2	2'-3	2'-4

Skew ∡	0°	5°	10°	15°	20°
Height H	8'	8'	8'	8'	8'
6 : 1 Slope Dimensions A	2'-0	2'-0	2'-0	2'-0	2'-0
B	1'-4	1'-4	1'-4	1'-4	1'-4
C	1'-8	1'-8	1'-8	1'-9	1'-9
D	5'-0	5'-0	5'-0	5'-1	5'-1
E	28'-0	27'-6	27'-0	27'-0	27'-0
F	3'-6	3'-6	3'-6	3'-8	3'-8
G	28'-0	28'-0	29'-0	29'-6	30'-6
J	3'-6	3'-6	3'-6	3'-8	3'-8
K	1'-10¼	1'-10¼	1'-10½	1'-11	1'-11¾
L	4'-8	4'-8	4'-8	4'-7	4'-7
M	4'-8	4'-10	4'-11	5'-0	5'-2
N	1'-10¼	1'-10½	1'-10¾	1'-11¼	2'-0

Height H	'c' Bars: Short Wing Skew ∡ 0°	5°	10°	15°	20°	Long Wing Skew ∡ 0°	5°	10°	15°	20°	Dim 'X'	*'d' Bars: Short Wing 0° to 10°	15° & 20°	Long Wing 0° to 20°
2 : 1 Slope 8'	2-#5	2-#5	2-#5	-	-	2-#5	2-#5	2-#5	3-#5	3-#5	2'-0	-	-	-
9'	4-#5	4-#5	4-#5	3-#5	2-#5	4-#5	4-#5	4-#5	5-#5	5-#5	3'-0	-	-	-
10'	6-#6	6-#6	5-#6	5-#6	4-#6	6-#6	7-#6	7-#6	7-#6	8-#6	4'-3	-	-	-
11'	8-#7	8-#7	7-#7	6-#7	6-#7	8-#7	9-#7	9-#7	10-#7	10-#7	6'-9	5-#6	4-#6	5-#6
12'	9-#7	8-#7	7-#7	6-#7	6-#7	9-#7	9-#7	9-#7	10-#7	10-#7	6'-9	8-#6	6-#6	8-#6
4 : 1 Slope 9'	6-#5	6-#5	5-#5	4-#5	3-#5	6-#5	6-#5	6-#5	7-#5	7-#5	3'-0	-	-	-
10'	10-#5	10-#5	9-#5	8-#5	7-#5	10-#5	10-#5	11-#5	11-#5	12-#5	4'-0	-	-	-
11'	14-#6	14-#6	13-#6	12-#6	12-#6	14-#6	15-#6	15-#6	16-#6	17-#6	5'-3	9-#6	8-#6	10-#6
12'	14-#7	14-#7	13-#7	12-#7	11-#7	14-#7	14-#7	15-#7	16-#7	17-#7	6'-9	13-#6	12-#6	15-#6

* 'd' bars alternate with 'a' bars at high end of wall.

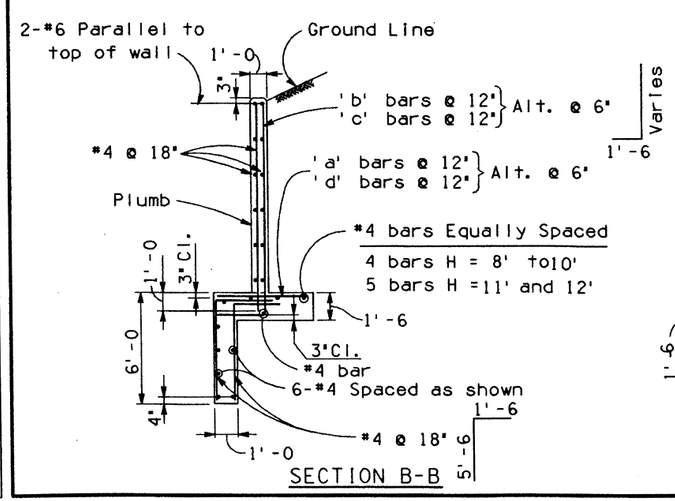

SECTION B-B

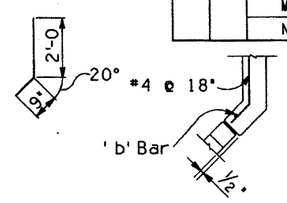

SECTION C-C

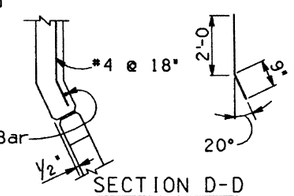

SECTION D-D

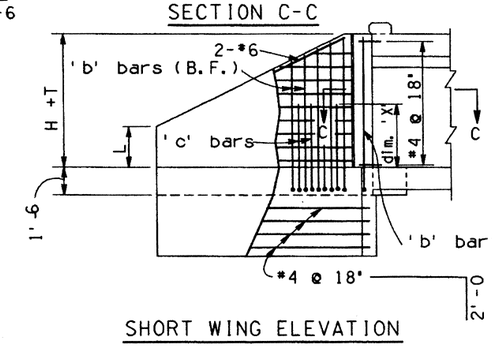

SHORT WING ELEVATION

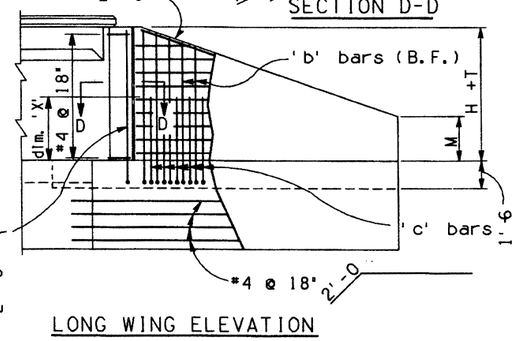

LONG WING ELEVATION

Height H	'a' bars	'b' bars
8'	#5	#5
9'	#5	#5
10'	#6	#5
11'	#5	#5
12'	#6	#6

NOTE :

For General Notes and Miscellaneous Details see B-01.10.
For Headwall Quantities see B-05.10, B-05.20 and B-05.30.

NO	DESCRIPTION OF REVISIONS	MADE BY	DATE
1	Revised cutoff wall	J.N.	6-88
2			
3			
4			

DESIGN
DRAWN
CHECKED

CADD FILENAME= ZFA
VIEW NAME=

Registered Professional Engineer (Civil) CERTIFICATE NO. 9910 F. DANIEL DAVIS DATE SIGNED 9-1-88 ARIZONA U.S.A.

DESIGN APPROVED F.D. Davis

APPROVED FOR DISTRIBUTION T.A. Bryant, II.

ARIZONA
DEPARTMENT OF TRANSPORTATION
HIGHWAYS DIVISION
STANDARD DRAWINGS

OUTLET WINGS
CULVERT HEIGHT 8' to 12'
SKEW 0° to 20°

REVISION 7-88

STANDARD NO. B-04.20

Skew ∆	θ_1
0°	45°
5°	55°
10°	65°
15°	75°
20°	85°

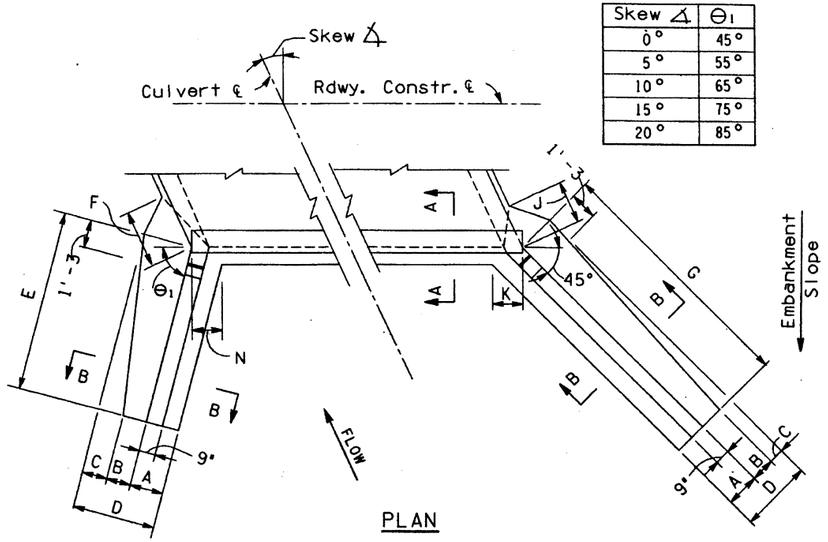

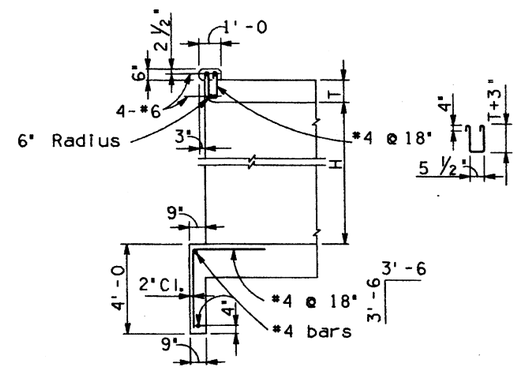

SECTION A-A

2 : 1 Slope Dimensions	Skew ∆	0°					5°					10°					15°					20°				
	Height H	3'	4'	5'	6'	7'	3'	4'	5'	6'	7'	3'	4'	5'	6'	7'	3'	4'	5'	6'	7'	3'	4'	5'	6'	7'
	A	1'-6	1'-6	1'-6	1'-6	1'-6	1'-6	1'-6	1'-6	1'-6	1'-6	1'-6	1'-6	1'-6	1'-6	1'-6	1'-6	1'-6	1'-6	1'-6	1'-6	1'-6	1'-6	1'-6	1'-6	1'-6
	B	9"	1'-0	1'-1	1'-2	1'-3	9"	1'-0	1'-1	1'-2	1'-3	9"	1'-0	1'-1	1'-2	1'-3	9"	1'-0	1'-1	1'-2	1'-3	9"	1'-0	1'-1	1'-2	1'-3
	C	6"	9"	1'-3	1'-8	2'-1	6"	9"	1'-3	1'-8	2'-1	6"	9"	1'-3	1'-8	2'-1	6"	9"	1'-3	1'-8	2'-1	6"	9"	1'-3	1'-8	2'-1
	D	2'-9	3'-3	3'-10	4'-4	4'-10	2'-9	3'-3	3'-10	4'-4	4'-10	2'-9	3'-3	3'-10	4'-4	4'-10	2'-9	3'-3	3'-10	4'-4	4'-10	2'-9	3'-3	3'-10	4'-4	4'-10
	E	6'-0	7'-6	8'-6	10'-0	11'-6	5'-6	7'-0	8'-6	10'-0	11'-0	5'-6	7'-0	8'-6	9'-6	11'-0	5'-6	7'-0	8'-6	10'-0	11'-0	6'-0	7'-6	8'-6	10'-0	11'-6
	F	1'-5	2'-2	3'-0	3'-8	4'-5	1'-5	2'-2	3'-0	3'-8	4'-5	1'-5	2'-2	2'-11	3'-8	4'-4	1'-5	2'-1	2'-11	3'-7	4'-3	1'-4	2'-0	2'-9	3'-5	4'-1
	G	6'-0	7'-6	8'-6	10'-0	11'-6	6'-0	7'-6	9'-6	10'-6	12'-0	6'-6	8'-0	9'-6	11'-0	12'-6	7'-0	8'-6	10'-0	12'-0	13'-6	7'-6	9'-0	11'-0	12'-6	14'-6
	J	1'-5	2'-2	3'-0	3'-8	4'-5	1'-5	2'-2	3'-0	3'-8	4'-5	1'-5	2'-2	2'-11	3'-8	4'-4	1'-5	2'-1	2'-11	3'-7	4'-3	1'-4	2'-0	2'-9	3'-5	4'-1
	K	1'-4½	1'-4½	1'-4½	1'-4½	1'-4½	1'-4½	1'-4½	1'-4½	1'-4½	1'-4½	1'-4½	1'-4½	1'-4½	1'-4½	1'-4½	1'-4½	1'-4½	1'-4½	1'-4½	1'-4½	1'-4½	1'-4½	1'-4½	1'-4½	1'-4½
	L	1'-11	2'-5	3'-1	3'-6	4'-0	1'-10	2'-2	2'-5	3'-0	3'-7	1'-7	1'-11	2'-3	2'-9	3'-1	1'-5	1'-8	1'-11	2'-3	2'-9	1'-1	1'-4	1'-10	2'-1	2'-4
	M	1'-11	2'-5	3'-1	3'-6	4'-0	1'-11	2'-5	2'-11	3'-4	3'-10	1'-9	2'-3	2'-8	3'-2	3'-8	1'-7	2'-1	2'-6	2'-10	3'-3	1'-5	1'-11	2'-2	2'-8	2'-11
	N	1'-4½	1'-4½	1'-4½	1'-4½	1'-4½	1'-3⅝	1'-3⅝	1'-3⅝	1'-3⅝	1'-3⅝	1'-3⅝	1'-3⅝	1'-3⅝	1'-3⅝	1'-3⅝	1'-4¼	1'-4¼	1'-4¼	1'-4¼	1'-4¼	1'-5¼	1'-5¼	1'-5¼	1'-5¼	1'-5¼

4 : 1 Slope Dimensions	Skew ∆	0°					5°					10°					15°					20°				
	Height H	3'	4'	5'	6'	7'	3'	4'	5'	6'	7'	3'	4'	5'	6'	7'	3'	4'	5'	6'	7'	3'	4'	5'	6'	7'
	A	1'-6	1'-6	1'-6	1'-6	1'-6	1'-6	1'-6	1'-6	1'-6	1'-6	1'-6	1'-6	1'-6	1'-6	1'-6	1'-6	1'-6	1'-6	1'-6	1'-6	1'-6	1'-6	1'-6	1'-6	1'-6
	B	9"	1'-0	1'-1	1'-4	1'-8	9"	1'-0	1'-1	1'-3	1'-7	9"	1'-0	1'-1	1'-2	1'-6	9"	1'-0	1'-1	1'-2	1'-5	9"	1'-0	1'-1	1'-2	1'-3
	C	4"	7"	1'-0	1'-3	1'-5	4"	7"	1'-0	1'-4	1'-6	4"	7"	1'-0	1'-5	1'-7	4"	7"	1'-0	1'-5	1'-8	4"	7"	1'-0	1'-5	1'-10
	D	2'-7	3'-1	3'-7	4'-1	4'-7	2'-7	3'-1	3'-7	4'-1	4'-7	2'-7	3'-1	3'-7	4'-1	4'-7	2'-7	3'-1	3'-7	4'-1	4'-7	2'-7	3'-1	3'-7	4'-1	4'-7
	E	8'-0	9'-6	11'-6	13'-6	15'-6	8'-0	10'-0	11'-6	13'-6	15'-6	8'-0	10'-0	12'-0	14'-0	16'-0	8'-6	10'-6	12'-6	14'-6	16'-6	9'-0	11'-0	13'-6	15'-6	17'-6
	F	1'-3	1'-11	2'-8	3'-4	4'-1	1'-3	1'-11	2'-7	3'-4	4'-0	1'-2	1'-11	2'-7	3'-3	4'-0	1'-2	1'-10	2'-6	3'-3	3'-11	1'-2	1'-10	2'-5	3'-1	3'-9
	G	8'-0	9'-6	11'-6	13'-6	15'-6	8'-6	10'-6	12'-6	14'-6	16'-6	9'-0	11'-0	13'-0	15'-6	17'-6	9'-6	12'-0	14'-6	16'-6	19'-0	10'-6	13'-0	15'-6	18'-6	21'-0
	J	1'-3	1'-11	2'-8	3'-4	4'-1	1'-3	1'-11	2'-7	3'-4	4'-0	1'-2	1'-11	2'-7	3'-3	4'-0	1'-2	1'-10	2'-6	3'-3	3'-11	1'-2	1'-10	2'-5	3'-1	3'-9
	K	1'-4½	1'-4½	1'-4½	1'-4½	1'-4½	1'-4½	1'-4½	1'-4½	1'-4½	1'-4½	1'-4½	1'-4½	1'-4½	1'-4½	1'-4½	1'-4½	1'-4½	1'-4½	1'-4½	1'-4½	1'-4½	1'-4½	1'-4½	1'-4½	1'-4½
	L	2'-8	3'-5	4'-0	4'-8	5'-4	2'-5	3'-0	3'-8	4'-4	4'-11	2'-3	2'-10	3'-4	3'-11	4'-5	2'-0	2'-6	3'-1	3'-7	4'-1	1'-10	2'-4	2'-8	3'-2	3'-8
	M	2'-8	3'-5	4'-0	4'-8	5'-4	2'-7	3'-2	3'-10	4'-6	5'-2	2'-6	3'-1	3'-9	4'-4	5'-0	2'-5	2'-11	3'-6	4'-2	4'-8	2'-2	2'-9	3'-4	3'-10	4'-4
	N	1'-4½	1'-4½	1'-4½	1'-4½	1'-4½	1'-3⅝	1'-3⅝	1'-3⅝	1'-3⅝	1'-3⅝	1'-3⅝	1/-3⅝	1'-3⅝	1'-3⅝	1'-3⅝	1'-4¼	1'-4¼	1'-4¼	1'-4¼	1'-4¼	1'-5¼	1'-5¼	1'-5¼	1'-5¼	1'-5¼

6 : 1 Slope Dimensions	Skew ∆	0°					5°					10°					15°					20°				
	Height H	3'	4'	5'	6'	7'	3'	4'	5'	6'	7'	3'	4'	5'	6'	7'	3'	4'	5'	6'	7'	3'	4'	5'	6'	7'
	A	1'-6	1'-6	1'-6	1'-6	1'-6	1'-6	1'-6	1'-6	1'-6	1'-6	1'-6	1'-6	1'-6	1'-6	1'-6	1'-6	1'-6	1'-6	1'-6	1'-6	1'-6	1'-6	1'-6	1'-6	1'-6
	B	9"	1'-0	1'-3	1'-7	2'-0	9"	1'-0	1'-2	1'-7	1'-11	9"	1'-0	1'-1	1'-6	1'-10	9"	1'-0	1'-1	1'-4	1'-8	9"	1'-0	1'-1	1'-3	1'-7
	C	3"	6"	9"	11"	1'-0	3"	6"	10"	11"	1'-1	3"	6"	11"	1'-0	1'-2	3"	6"	11"	1'-2	1'-4	3"	6"	11"	1'-3	1'-5
	D	2'-6	3'-0	3'-6	4'-0	4'-6	2'-6	3'-0	3'-6	4'-0	4'-6	2'-6	3'-0	3'-6	4'-0	4'-6	2'-6	3'-0	3'-6	4'-0	4'-6	2'-6	3'-0	3'-6	4'-0	4'-6
	E	8'-6	11'-0	13'-0	15'-0	17'-0	9'-0	11'-0	13'-6	15'-6	17'-6	9'-6	11'-6	14'-0	16'-6	18'-6	10'-0	12'-6	15'-0	17'-6	19'-6	11'-0	13'-6	16'-0	19'-0	21'-6
	F	1'-1	1'-10	2'-6	3'-3	3'-11	1'-1	1'-10	2'-6	3'-3	3'-11	1'-1	1'-9	2'-6	3'-2	3'-10	1'-1	1'-9	2'-5	3'-1	3'-9	1'-0	1'-8	2'-4	3'-0	3'-8
	G	8'-6	11'-0	13'-0	15'-0	17'-0	9'-6	11'-6	14'-0	16'-0	18'-6	10'-0	12'-6	15'-0	17'-6	20'-0	11'-0	14'-0	16'-6	19'-6	22'-0	12'-6	15'-6	18'-6	21'-6	24'-6
	J	1'-1	1'-10	2'-6	3'-3	3'-11	1'-1	1'-10	2'-6	3'-3	3'-11	1'-1	1'-9	2'-6	3'-2	3'-10	1'-1	1'-9	2'-5	3'-1	3'-9	1'-0	1'-8	2'-4	3'-0	3'-8
	K	1'-4½	1'-4½	1'-4½	1'-4½	1'-4½	1'-4½	1'-4½	1'-4½	1'-4½	1'-4½	1'-4½	1'-4½	1'-4½	1'-4½	1'-4½	1'-4½	1'-4½	1'-4½	1'-4½	1'-4½	1'-4½	1'-4½	1'-4½	1'-4½	1'-4½
	L	3'-1	3'-9	4'-6	5'-4	6'-1	2'-10	3'-7	4'-3	4'-11	5'-8	2'-8	3'-4	3'-11	4'-7	5'-3	2'-5	3'-1	3'-8	4'-3	4'-11	2'-3	2'-10	3'-5	3'-11	4'-6
	M	3'-1	3'-9	4'-6	5'-4	6'-1	2'-11	3'-8	4'-5	5'-2	5'-11	2'-11	3'-7	4'-4	5'-0	5'-8	2'-9	3'-5	4'-1	4'-9	5'-6	2'-7	3'-3	3'-11	4'-6	5'-2
	N	1'-4½	1'-4½	1'-4½	1'-4½	1'-4½	1'-3⅝	1'-3⅝	1'-3⅝	1'-3⅝	1'-3⅝	1'-3⅝	1'-3⅝	1'-3⅝	1'-3⅝	1'-3⅝	1'-4¼	1'-4¼	1'-4¼	1'-4¼	1'-4¼	1'- 5¼	1'-5¼	1'-5¼	1'-5¼	1'-5¼

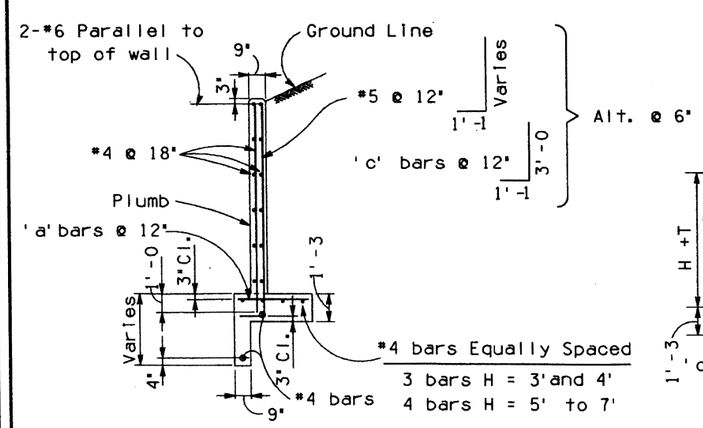

SECTION B-B

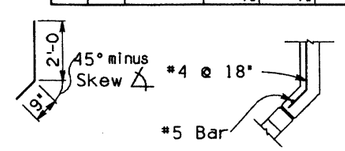

SECTION C-C

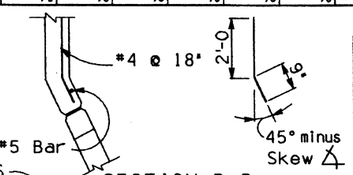

SECTION D-D

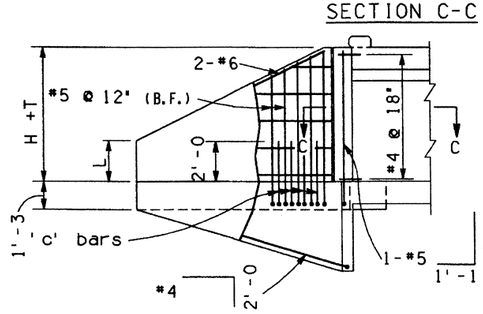

SHORT WING ELEVATION

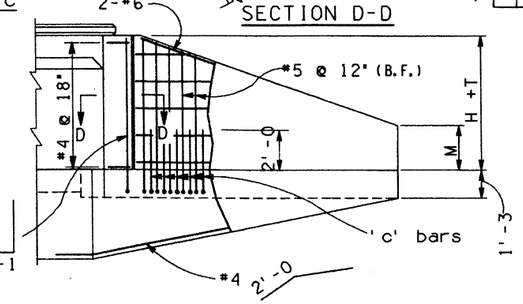

LONG WING ELEVATION

'c' bars			
Hgt. H	Slope	Short Wing 0° to 10°	Long Wing 0° to 20°
7'	2 : 1	3 - #5	3 - #5
	4 : 1	5 - #5	5 - #5

'a' bars			
Height H	Short Wing 0° to 10°	Short Wing 15° & 20°	Long Wing 0° to 20°
3'	#4	#4	#4
4'	#4	#4	#4
5'	#4	#4	#4
6'	#5	#4	#5
7'	#6	#4	#6

NOTE :

For General Notes and Miscellaneous Details see B-01.10.
For Headwall Quantities see B-05.10, B-05.20 and B-05.30.

NO	DESCRIPTION OF REVISIONS	MADE BY	DATE
1	Removed flow line	J.M.	6-88
2			
3			
4			

DESIGN
DRAWN
CHECKED

CADD FILENAME= ZFA
VIEW NAME=

Registered Professional Engineer (Civil) CERTIFICATE NO. 9910 F. DANIEL DAVIS Date Signed 6-1-88 Arizona U.S.A.

DESIGN APPROVED
F. D. Davis

APPROVED FOR DISTRIBUTION
T. A. Bryant, II.

ARIZONA
DEPARTMENT OF TRANSPORTATION
HIGHWAYS DIVISION
STANDARD DRAWINGS

INLET WINGS
CULVERT HEIGHT 3' to 7'
SKEW 0° to 20°

REVISION 7-88

STANDARD NO. B-04.30

Skew ∆	Θ_1
0°	45°
5°	55°
10°	65°
15°	75°
20°	85°

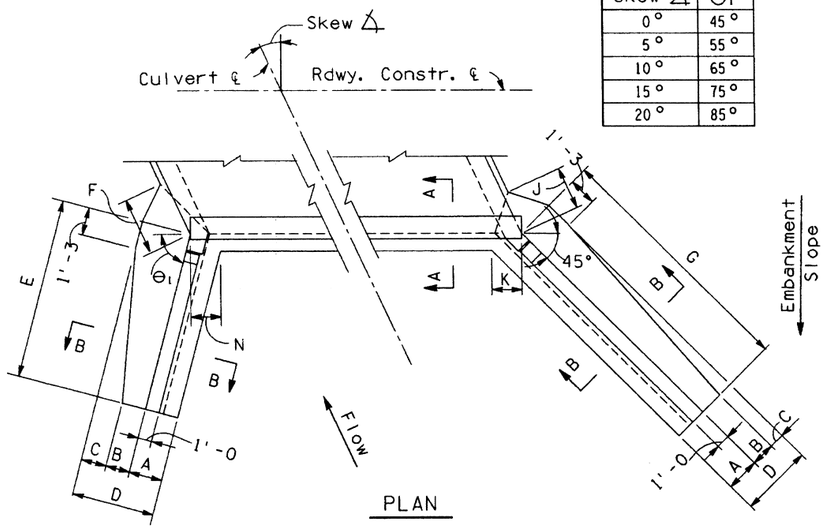

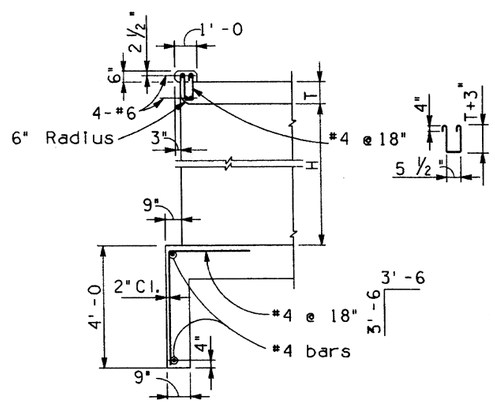

SECTION A-A

	Skew ∆	0°					5°					10°					15°					20°				
	Height H	8'	9'	10'	11'	12'	8'	9'	10'	11'	12'	8'	9'	10'	11'	12'	8'	9'	10'	11'	12'	8'	9'	10'	11'	12'
2 : 1 Slope Dimensions	A	2'-0	2'-1	2'-2	2'-3	2'-4	2'-0	2'-1	2'-2	2'-3	2'-4	2'-0	2'-1	2'-2	2'-3	2'-4	2'-0	2'-1	2'-2	2'-3	2'-4	2'-0	2'-1	2'-2	2'-3	2'-4
	B	1'-4	1'-5	1'-6	1'-9	1'-11	1'-4	1'-5	1'-6	1'-7	1'-9	1'-4	1'-5	1'-6	1'-7	1'-8	1'-4	1'-5	1'-6	1'-7	1'-8	1'-4	1'-5	1'-6	1'-7	1'-8
	C	2'-2	2'-7	3'-0	3'-6	4'-2	2'-2	2'-7	3'-0	3'-8	4'-4	2'-2	2'-7	3'-0	3'-8	4'-5	2'-2	2'-7	3'-0	3'-8	4'-5	2'-2	2'-7	3'-0	3'-8	4'-5
	D	5'-6	6'-1	6'-8	7'-6	8'-5	5'-6	6'-1	6'-8	7'-6	8'-5	5'-6	6'-1	6'-8	7'-6	8'-5	5'-6	6'-1	6'-8	7'-6	8'-5	5'-6	6'-1	6'-8	7'-6	8'-5
	E	13'-0	14'-6	16'-0	17'-0	18'-6	12'-6	14'-0	15'-6	16'-6	18'-0	12'-6	13'-6	15'-0	16'-6	18'-0	12'-6	14'-0	15'-0	16'-6	18'-0	13'-0	14'-6	15'-6	17'-0	18'-6
	F	4'-8	5'-4	6'-1	7'-1	8'-3	4'-7	5'-4	6'-0	7'-1	8'-3	4'-7	5'-3	5'-11	7'-0	8'-2	4'-6	5'-2	5'-10	6'-10	8'-0	4'-4	5'-0	5'-8	6'-8	7'-9
	G	13'-0	14'-6	16'-0	17'-0	18'-6	13'-6	15'-0	16'-6	18'-0	19'-6	14'-6	16'-0	17'-6	19'-0	20'-6	15'-0	17'-0	18'-6	20'-0	22'-0	16'-0	18'-0	19'-6	21'-6	23'-6
	J	4'-8	5'-4	6'-1	7'-1	8'-3	4'-7	5'-4	6'-0	7'-1	8'-3	4'-7	5'-3	5'-11	7'-0	8'-2	4'-6	5'-2	5'-10	6'-10	8'-0	4'-4	5'-0	5'-8	6'-8	7'-9
	K	2'-0⅞	2'-2⅜	2'-3¾	2'-5⅛	2'-6⅝	2'-0⅞	2'-2⅜	2'-3¾	2'-5⅛	2'-6⅝	2'-0⅞	2'-2⅜	2'-3¾	2'-5⅛	2'-6⅝	2'-0⅞	2'-2⅜	2'-3¾	2'-5⅛	2'-6⅝	2'-0⅞	2'-2⅜	2'-3¾	2'-5⅛	2'-6⅝
	L	4'-6	4'-11	5'-5	6'-1	6'-6	3'-11	4'-4	4'-9	5'-4	5'-8	3'-5	3'-11	4'-3	4'-7	4'-11	3'-0	3'-4	3'-10	4'-1	4'-4	2'-7	2'-10	3'-4	3'-7	3'-10
	M	4'-6	4'-11	5'-5	6'-1	6'-6	4'-3	4'-9	5'-3	5'-8	6'-2	3'-11	4'-5	4'-11	5'-4	5'-10	3'-9	4'-1	4'-6	5'-0	5'-3	3'-5	3'-8	4'-2	4'-6	4'-9
	N	2'-0⅞	2'-2⅜	2'-3¾	2'-5⅛	2'-6⅝	1'-11	2'-0¼	2'-1½	2'-2⅝	2'-3⅞	1'-10¼	1'-11⅜	2'-0½	2'-1⅝	2'-2¾	1'-10½	1'-11½	2'-0½	2'-1½	2'-2⅝	1'-11¼	2'-0¼	2'-1¼	2'-2⅜	2'-3⅜

	Skew ∆	0°					5°					10°					15°					20°				
	Height H	8'	9'	10'	11'	12'	8'	9'	10'	11'	12'	8'	9'	10'	11'	12'	8'	9'	10'	11'	12'	8'	9'	10'	11'	12'
4 : 1 Slope Dimensions	A	2'-0	2'-1	2'-2	2'-3	2'-4	2'-0	2'-1	2'-2	2'-3	2'-4	2'-0	2'-1	2'-2	2'-3	2'-4	2'-0	2'-1	2'-2	2'-3	2'-4	2'-0	2'-1	2'-2	2'-3	2'-4
	B	1'-8	1'-11	2'-2	2'-5	2'-8	1'-6	1'-9	2'-0	2'-3	2'-6	1'-5	1'-8	1'-11	2'-2	2'-4	1'-4	1'-6	1'-9	1'-11	2'-2	1'-4	1'-5	1'-6	1'-8	1'-10
	C	1'-6	1'-8	1'-10	2'-3	2'-9	1'-8	1'-10	2'-0	2'-5	2'-11	1'-9	1'-11	2'-1	2'-6	3'-1	1'-10	2'-1	2'-3	2'-9	3'-3	1'-10	2'-2	2'-6	3'-0	3'-7
	D	5'-2	5'-8	6'-2	6'-11	7'-9	5'-2	5'-8	6'-2	6'-11	7'-9	5'-2	5'-8	6'-2	6'-11	7'-9	5'-2	5'-8	6'-2	6'-11	7'-9	5'-2	5'-8	6'-2	6'-11	7'-9
	E	17'-0	19'-0	21'-0	23'-0	25'-0	17'-6	19'-6	21'-0	23'-0	25'-0	18'-0	19'-6	21'-6	23'-6	25'-6	18'-6	20'-6	22'-6	24'-6	26'-6	20'-0	22'-0	24'-0	26'-6	28'-6
	F	4'-2	4'-9	5'-4	6'-3	7'-4	4'-2	4'-9	5'-4	6'-3	7'-4	4'-1	4'-8	5'-3	6'-2	7'-3	4'-0	4'-7	5'-2	6'-1	7'-1	3'-11	4'-5	5'-0	5'-11	6'-11
	G	17'-0	19'-0	21'-0	23'-0	25'-0	18'-6	20'-6	22'-6	24'-6	26'-6	19'-6	22'-0	24'-0	26'-0	28'-6	21'-6	23'-6	26'-0	28'-6	30'-6	23'-6	26'-0	28'-6	31'-0	34'-0
	J	4'-2	4'-9	5'-4	6'-3	7'-4	4'-2	4'-9	5'-4	6'-3	7'-4	4'-1	4'-8	5'-3	6'-2	7'-3	4'-0	4'-7	5'-2	6'-1	7'-1	3'-11	4'-5	5'-0	5'-11	6'-11
	K	2'-0⅞	2'-2⅜	2'-3¾	2'-5⅛	2'-6⅝	2'-0⅞	2'-2⅜	2'-3¾	2'-5⅛	2'-6⅝	2'-0⅞	2'-2⅜	2'-3¾	2'-5⅛	2'-6⅝	2'-0⅞	2'-2⅜	2'-3¾	2'-5⅛	2'-6⅝	2'-0⅞	2'-2⅜	2'-3¾	2'-5⅛	2'-6⅝
	L	6'-1	6'-8	7'-4	8'-0	8'-8	5'-6	6'-1	6'-9	7'-4	7'-11	5'-0	5'-8	6'-2	6'-9	7'-3	4'-7	5'-1	5'-8	6'-2	6'-8	4'-1	4'-7	5'-1	5'-6	6'-0
	M	6'-1	6'-8	7'-4	8'-0	8'-8	5'-10	6'-5	7'-1	7'-9	8'-5	5'-7	6'-2	6'-10	7'-6	8'-0	5'-3	5'-11	6'-6	7'-0	7'-8	4'-11	5'-6	6'-0	6'-7	7'-1
	N	2'-0⅞	2'-2⅜	2'-3¾	2'-5⅛	2'-6⅝	1'-11	2'-0¼	2'-1½	2'-2⅝	2'-3⅞	1'-10¼	1'-11⅜	2'-0½	2'-1⅝	2'-2¾	1'-10½	1'-11½	2'-0½	2'-1½	2'-2⅝	1'-11¼	2'-0¼	2'-1¼	2'-2⅜	2'-3⅜

	Skew ∆	0°	5°	10°	15°	20°
	Height H	8'	8'	8'	8'	8'
6 : 1 Slope Dimensions	A	2'-0	2'-0	2'0	2'-0	2'-0
	B	1'-11	1'-10	1'-9	1'-8	1'-6
	C	1'-2	1'-3	1'-4	1'-5	1'-7
	D	5'-1	5'-1	5'-1	5'-1	5'-1
	E	19'-6	20'-0	21'-0	22'-0	24'-0
	F	4'-1	4'-0	4'-0	3'-11	3'-9
	G	19'-6	21'-0	22'-6	24'-6	27'-6
	J	4'-1	4'-0	4'-0	3'-11	3'-9
	K	2'-0⅞	2'-0⅞	2'-0⅞	2'-0⅞	2'-0⅞
	L	6'-9	6'-4	5'-11	5'-6	5'-1
	M	6'-9	6'-7	6'-5	6'-2	5'-10
	N	2'-0⅞	1'-11	1'-10¼	1'-10½	1'-11¼

Height H	'a' bars	'b' bars
8'	#5	#5
9'	#6	#5
10'	#6	#5
11'	#6	#5
12'	#6	#6

	Height H	'c' Bars: Short Wing Skew ∆ 0°	5°	10°	15°	20°	Long Wing Wall	Dim 'X'	*'d' Bars: Short Wing 0° to 10°	Short Wing 15° & 20°	Long Wing 0° to 20°
2:1 Slope	8'	3-#5	3-#5	2-#5	2-#5	-	3-#5	2'-0	-	-	-
	9'	5-#5	4-#5	3-#5	3-#5	2-#5	5-#5	3'-0	-	-	-
	10'	8-#6	7-#6	6-#6	5-#6	4-#6	8-#6	4'-3	3-#5	-	3-#5
	11'	11-#7	10-#7	9-#7	7-#7	6-#7	11-#7	6'-9	6-#5	5-#5	6-#5
	12'	11-#7	10-#7	9-#7	7-#7	6-#7	11-#7	6'-9	9-#7	7-#6	9-#7
4:1 Slope	9'	7-#5	6-#5	6-#5	5-#5	4-#5	7-#5	3'-0	-	-	-
	10'	12-#5	11-#5	10-#5	9-#5	8-#5	12-#5	4'-0	-	-	-
	11'	18-#7	17-#7	16-#7	15-#7	14-#7	18-#7	6-3	11-#5	6-#5	11-#5
	12'	18-#7	17-#7	16-#7	15-#7	14-#7	18-#7	6'-3	11-#6	11-#6	11-#6

* 'd' bars alternate with 'a' bars at high end of wall.

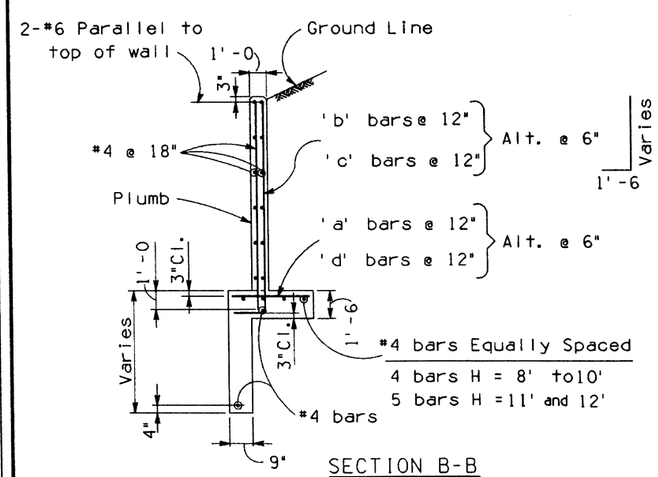

SECTION B-B

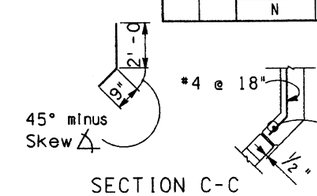

SECTION C-C

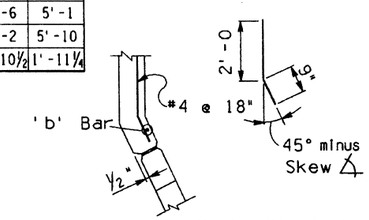

SECTION D-D

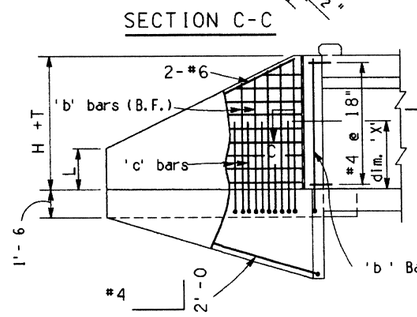

SHORT WING ELEVATION

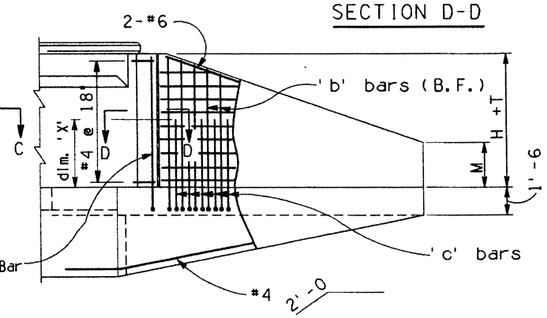

LONG WING ELEVATION

NOTE :

For General Notes and Miscellaneous Details see B-01.10.
For Headwall Quantities see B-05.10, B-05.20 and B-05.30.

NO	DESCRIPTION OF REVISIONS	MADE BY	DATE
1	Removed flow line	C.H.	6-88
2	Changed bar length in Sect. A-A	J.M.	4-92
3			
4			

DESIGN
DRAWN
CHECKED

CADD FILENAME= ZFA
VIEW NAME=

DESIGN APPROVED
F. Daniel Davis

APPROVED FOR DISTRIBUTION

ARIZONA
DEPARTMENT OF TRANSPORTATION
HIGHWAYS DIVISION
STANDARD DRAWINGS

INLET WINGS
CULVERT HEIGHT 8' to 12'
SKEW 0° to 20°

REVISION 4-92

STANDARD NO. B-04.40

Skew ∡	Θ_1	Θ_2
25°	65°	45°
30°	60°	40°
35°	55°	35°
40°	50°	30°
45°	45°	25°

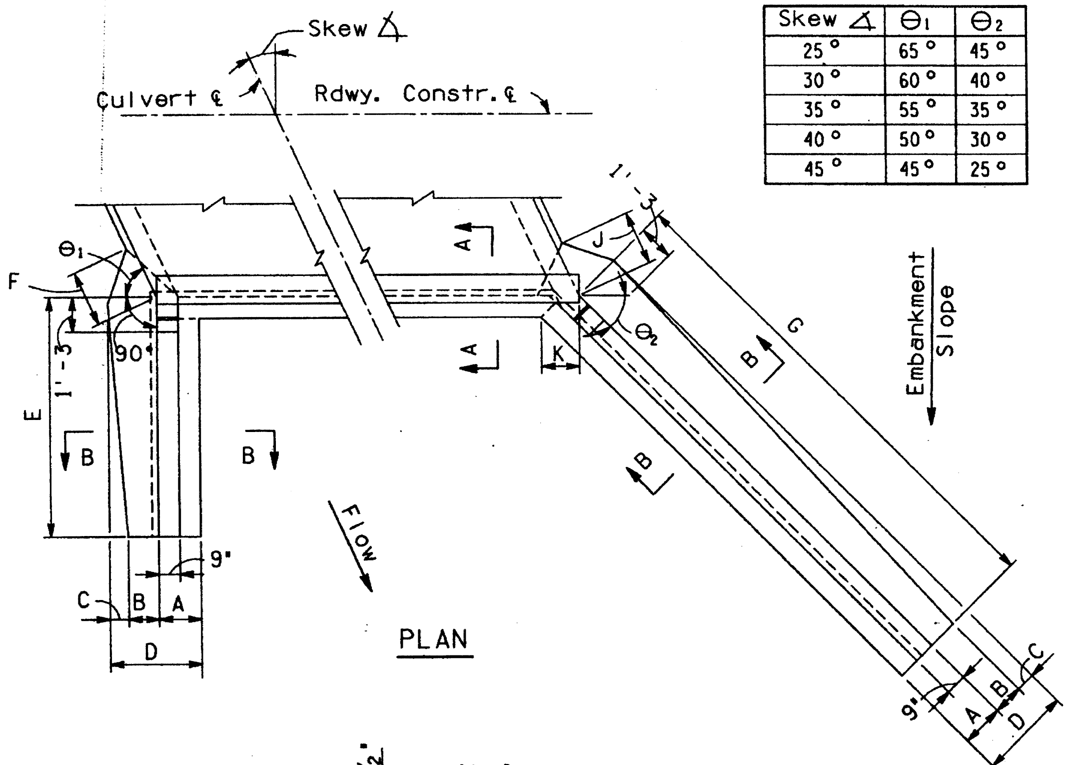

PLAN

2 : 1 Slope

Skew ∡	25°					30°					35°					40°					45°				
Height H	3'	4'	5'	6'	7'	3'	4'	5'	6'	7'	3'	4'	5'	6'	7'	3'	4'	5'	6'	7'	3'	4'	5'	6'	7'
A	1'-6	1'-6	1'-6	1'-6	1'-6	1'-6	1'-6	1'-6	1'-6	1'-6	1'-6	1'-6	1'-6	1'-6	1'-6	1'-6	1'-6	1'-6	1'-6	1'-6	1'-6	1'-6	1'-6	1'-6	1'-6
B	9"	1'-0	1'-1	1'-2	1'-3	9"	1'-0	1'-1	1'-2	1'-3	9"	1'-0	1'-1	1'-2	1'-3	9"	1'-0	1'-1	1'-2	1'-3	9"	1'-0	1'-1	1'-2	1'-3
C	6"	9"	1'-3	1'-8	2'-1	7"	10"	1'-3	1'-9	2'-2	7"	11"	1'-4	1'-10	2'-3	8"	11"	1'-5	1'-10	2'-4	8"	1'-0	1'-6	1'-11	2'-5
D	2'-9	3'-3	3'-10	4'-4	4'-10	2'-10	3'-4	3'-10	4'-5	4'-11	2'-10	3'-5	3'-11	4'-6	5'-0	2'-11	3'-5	4'-0	4'-6	5'-1	2'-11	3'-6	4'-1	4'-7	5'-2
E	6'-0	7'-6	8'-6	10'-0	11'-6	5'-6	7'-0	8'-0	9'-6	11'-0	5'-6	6'-6	8'-0	9'-0	10'-6	5'-0	6'-6	7'-6	8'-6	10'-0	5'-0	6'-0	7'-0	8'-6	9'-6
F	1'-4	2'-0	2'-9	3'-5	4'-1	1'-6	2'-2	2'-11	3'-8	4'-4	1'-7	2'-4	3'-1	3'-10	4'-7	1'-8	2'-5	3'-3	3'-11	4'-9	1'-8	2'-6	3'-4	4'-1	4'-10
G	8'-0	10'-0	11'-6	13'-6	15'-6	8'-6	10'-6	12'-6	14'-6	16'-6	9'-0	11'-0	13'-6	15'-6	17'-6	10'-0	12'-0	14'-6	17'-0	19'-6	10'-6	13'-6	16'-0	18'-6	21'-0
J	1'-3	1'-11	2'-8	3'-4	4'-0	1'-5	2'-0	2'-8	3'-5	4'-1	1'-5	2'-2	2'-9	3'-6	4'-2	1'-6	2'-2	2'-11	3'-6	4'-3	1'-6	2'-3	3'-0	3'-8	4'-5
K	1'-4½	1'-4½	1'-4½	1'-4½	1'-4½	1'-5¼	1'-5¼	1'-5¼	1'-5¼	1'-5¼	1'-6½	1'-6½	1'-6½	1'-6½	1'-6½	1'-8⅜	1'-8⅜	1'-8⅜	1'-8⅜	1'-8⅜	1'-11¼	1'-11¼	1'-11¼	1' 11¼	1'-11¼
L	1'-1	1'-4	1'-10	2'-1	2'-4	1'-4	1'-7	2'-1	2'-4	2'-7	1'-4	1'-10	2'-1	2'-7	2'-10	1'-7	1'-10	2'-4	2'-10	3'-1	1'-7	2'-1	2'-7	2'-10	3'-4
M	1'-3	1'-6	2'-0	2'-3	2'-7	1'-4	1'-8	2'-1	2'-5	2'-9	1'-6	1'-11	2'-2	2'-7	3'-1	1'-7	2'-1	2'-5	2'-10	3'-2	1'-10	2'-3	2'-8	3'-2	3'-8

4 : 1 Slope

Skew ∡	25°					30°					35°					40°					45°				
Height H	3'	4'	5'	6'	7'	3'	4'	5'	6'	7'	3'	4'	5'	6'	7'	3'	4'	5'	6'	7'	3'	4'	5'	6'	7'
A	1'-6	1'-6	1'-6	1'-6	1'-6	1'-6	1'-6	1'-6	1'-6	1'-6	1'-6	1'-6	1'-6	1'-6	1'-6	1'-6	1'-6	1'-6	1'-6	1'-6	1'-6	1'-6	1'-6	1'-6	1'-6
B	9"	1'-0	1'-1	1'-2	1'-3	9"	1'-0	1'-1	1'-2	1'-3	9"	1'-0	1'-1	1'-2	1'-3	9"	1'-0	1'-1	1'-2	1'-4	9"	1'-0	1'-1	1'-3	1'-7
C	4"	7"	1'-0	1'-5	1'-10	4"	7"	1'-0	1'-5	1'-10	4"	7"	1'-0	1'-5	1'-10	4"	7"	1'-0	1'-5	1'-9	4"	7"	1'-0	1'-5	1'-7
D	2'-7	3'-1	3'-7	4'-1	4'-7	2'-7	3'-1	3'-7	4'-1	4'-7	2'-7	3'-1	3'-7	4'-1	4'-7	2'-7	3'-1	3'-7	4'-1	4'-7	2'-7	3'-1	3'-7	4'-2	4'-8
E	9'-0	11'-0	13'-6	15'-6	17'-6	8'-6	10'-6	12'-6	14'-6	16'-6	7'-6	9'-6	11'-6	13'-6	15'-0	7'-0	9'-0	10'-6	12'-6	14'-0	7'-0	8'-6	10'-0	12'-0	13'-6
F	1'-2	1'-10	2'-5	3'-1	3'-9	1'-2	1'-10	2'-6	3'-3	3'-11	1'-2	1'-11	2'-7	3'-3	4'-0	1'-3	1'-11	2'-7	3'-4	4'-0	1'-3	1'-11	2'-8	3'-6	4'-2
G	12'-0	14'-6	17'-6	20'-6	23'-6	12'-6	15'-6	18'-6	21'-6	24'-6	13'-0	16'-0	19'-6	22'-6	25'-6	14'-0	17'-0	20'-6	24'-0	27'-6	15'-0	18'-6	22'-0	25'-6	29'-0
J	1'-1	1'-9	2'-4	3'-0	3'-8	1'-1	1'-9	2'-4	3'-0	3'-8	1'-1	1'-9	2'-4	3'-0	3'-8	1'-1	1'-9	2'-4	3'-0	3'-8	1'-1	1'-9	2'-4	3'-1	3'-9
K	1'-4½	1'-4½	1'-4½	1'-4½	1'-4½	1'-5¼	1'-5¼	1'-5¼	1'-5¼	1'-5¼	1'-6½	1'-6½	1'-6½	1'-6½	1'-6½	1'-8⅜	1'-8⅜	1'-8⅜	1'-8⅜	1'-8⅜	1-11¼	1'-11¼	1'-11¼	1'-11¼	1'-11¼
L	1'-10	2'-4	2'-8	3'-2	3'-8	1'-11	2'-5	2'-11	3'-5	3'-11	2'-2	2'-8	3'-2	3'-8	4'-4	2'-4	2'-10	3'-5	3'-11	4'-7	2'-4	2'-11	3'-7	4'-1	4'-8
M	1'-11	2'-6	3'-0	3'-5	3'-11	2'-1	2'-7	3'-1	3'-7	4'-2	2'-2	2'-9	3'-3	3'-10	4'-5	2'-4	2'-11	3'-6	4'-1	4'-8	2'-6	3'-1	3'-9	4'-4	5'-0

6 : 1 Slope

Skew ∡	25°					30°					35°					40°					45°				
Height H	3'	4'	5'	6'	7'	3'	4'	5'	6'	7'	3'	4'	5'	6'	7'	3'	4'	5'	6'	7'	3'	4'	5'	6'	7'
A	1'-6	1'-6	1'-6	1'-6	1'-6	1'-6	1'-6	1'-6	1'-6	1'-6	1'-6	1'-6	1'-6	1'-6	1'-6	1'-6	1'-6	1'-6	1'-6	1'-6	1'-6	1'-6	1'-6	1'-6	1'-6
B	9"	1'-0	1'-1	1'-2	1'-4	9"	1'-0	1'-1	1'-2	1'-6	9"	1'-0	1'-1	1'-3	1'-7	9"	1'-0	1'-1	1'-4	1'-8	9"	1'-0	1'-2	1'-6	1'-10
C	3"	6"	11"	1'-4	1'-8	3"	6"	11"	1'-4	1'-6	3"	6"	11"	1'-3	1'-5	3"	6"	11"	1'-2	1'-4	3'	6"	10"	1'-0	1'-2
D	2'-6	3'-0	3'-6	4'-0	4'-6	2'-6	3'-0	3'-6	4'-0	4'-6	2'-6	3'-0	3'-6	4'-0	4'-6	2'-6	3'-0	3'-6	4'-0	4'-6	2'-6	3'-0	3'-6	4'-0	4'-6
E	11'-0	13'-6	16'-0	19'-0	21'-6	10'-0	12'-6	14'-6	17'-0	19'-6	9'-0	11'-6	13'-6	15'-6	18'-0	8'-6	10'-6	12'-6	14'-6	16'-6	8'-0	10'-0	12'-0	13'-6	15'-6
F	1'-0	1'-8	2'-4	3'-0	3'-8	1'-1	1'-9	2'-5	3'-1	3'-9	1'-1	1'-9	2'-6	3'-2	3'-10	1'-1	1'-10	2'-6	3'-3	3'-11	1'-1	1'-10	2'-6	3'-3	3'-11
G	14'-0	17'-6	21'-0	24'-6	28'-0	14'-6	18'-6	22'-0	25'-6	29'-0	15'-6	19'-0	23'-0	26'-6	30'-6	16'-0	20'-0	24'-0	28'-0	32'-0	17'-0	21'-0	25'-0	29'-6	33'-6
J	1'-0	1'-7	2'-3	2'-11	3'-6	1'-0	1'-7	2'-3	2'-11	3'-6	1'-0	1'-7	2'-3	2'-11	3'-6	1'-0	1'-7	2'-3	2'-11	3'-6	1'-0	1'-7	2'-3	2'-11	3'-6
K	1'-4½	1'-4½	1'-4½	1'-4½	1'-4½	1'-5¼	1'-5¼	1'-5¼	1'-5¼	1'-5¼	1'-6½	1'-6½	1'-6½	1'-6½	1'-6½	1'-8⅜	1'-8⅜	1'-8⅜	1'-8⅜	1'-8⅜	1'-11¼	1'-11¼	1'-11¼	1'-11¼	1'-11¼
L	2'-3	2'-10	3'-5	3'-11	4'-6	2'-5	3'-0	3'-8	4'-3	4'-10	2'-7	3'-2	3'-10	4'-6	5'-1	2'-8	3'-4	4'-0	4'-8	5'-4	2'=9	3'-5	4'-1	4'-10	5'-6
M	2'-5	3'-0	3'-7	4'-2	4'-9	2'-6	3'-1	3'-8	4'-4	4'-11	2'-7	3'-3	3'-10	4'-6	5'-2	2'-9	3'-5	4'-1	4'-9	5'-5	2'-10	3'-7	4'-4	5'-0	5'-8

(Rows A–M: Dimensions)

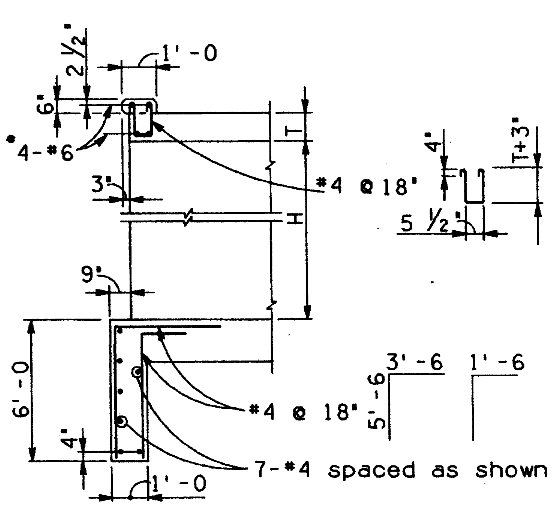

*Use 4-#7 for 10' spans with 35° to 45° skews.

SECTION A-A

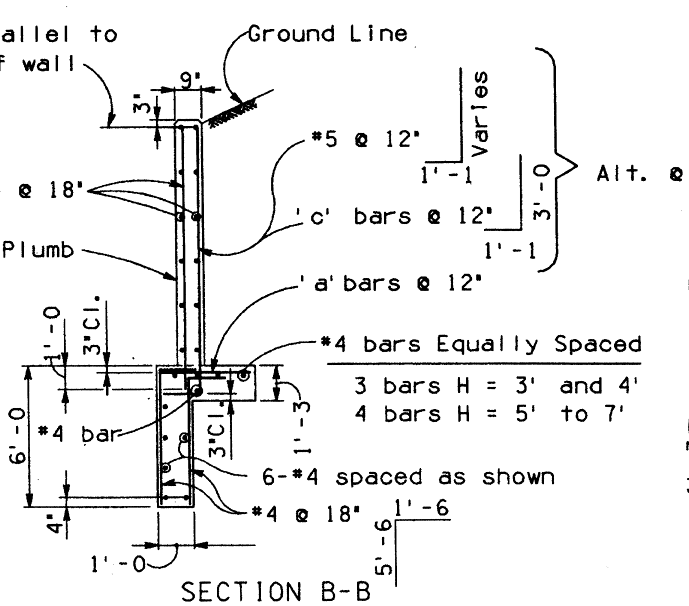

SECTION B-B

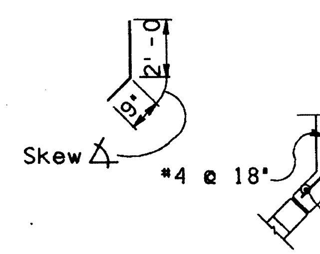

SECTION C-C

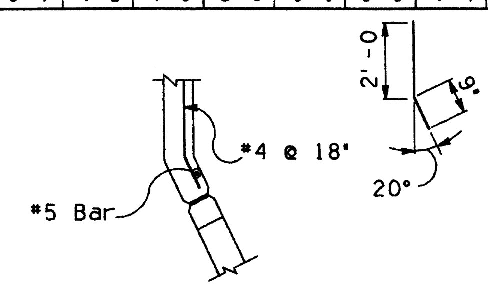

SECTION D-D

H = 7'	'c' Bars Long Wingwall		
	Skew ∡	2 : 1 Slope	4 : 1 Slope
	25°	3 - #5	3 - #5
	30°	3 - #5	3 - #5
	35°	4 - #5	4 - #5
	40°	4 - #5	4 - #5
	45°	5 - #5	4 - #5

'a' Bars		
Height H	Short Wing	Long Wing
3'	#4	#4
4'	#4	#4
5'	#4	#4
6'	#4	#5
7'	#4	#6

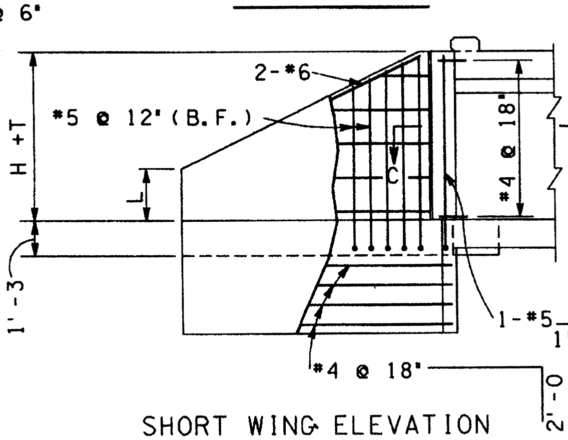

SHORT WING ELEVATION

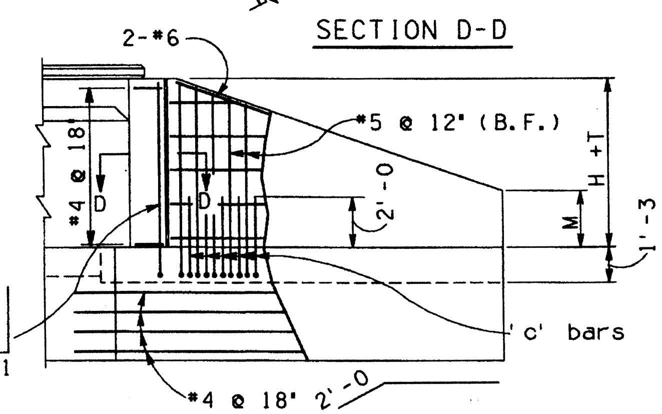

LONG WING ELEVATION

NOTE :

For General Notes and Miscellaneous Details see B-01.10.
For Headwall Quantities see B-05.10, B-05.20 and B-05.30.

NO	DESCRIPTION OF REVISIONS	MADE BY	DATE
1	Revised cutoff wall	C.H.	6-88
2			
3			
4			

DESIGN
DRAWN
CHECKED

Registered Professional Engineer (Civil) Certificate No. 9910 F. DANIEL DAVIS Date Signed 6-1-88 Arizona U.S.A.

DESIGN APPROVED F.D. Davis

APPROVED FOR DISTRIBUTION T.A. Bryant, II.

ARIZONA
DEPARTMENT OF TRANSPORTATION
HIGHWAYS DIVISION
STANDARD DRAWINGS

OUTLET WINGS
CULVERT HEIGHT 3' to 7'
SKEW 25° to 45°

REVISION 7-88

STANDARD NO. B-04.50

CADD FILENAME= ZFA
VIEW NAME=

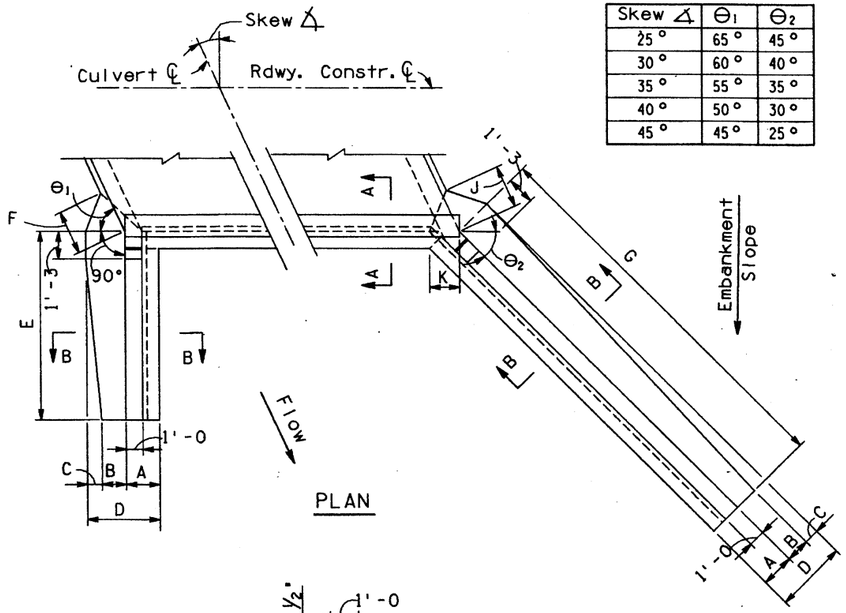

Skew ∡	Θ_1	Θ_2
25°	65°	45°
30°	60°	40°
35°	55°	35°
40°	50°	30°
45°	45°	25°

	Skew ∡	25°					30°					35°					40°					45°				
	Height H	8'	9'	10'	11'	12'	8'	9'	10'	11'	12'	8'	9'	10'	11'	12'	8'	9'	10'	11'	12'	8'	9'	10'	11'	12'
2 : 1 Slope Dimensions	A	2'-0	2'-1	2'-2	2'-3	2'-4	2'-0	2'-1	2'-2	2'-3	2'-4	2'-0	2'-1	2'-2	2'-3	2'-4	2'-0	2'-1	2'-2	2'-3	2'-4	2'-0	2'-1	2'-2	2'-3	2'-4
	B	1'-4	1'-5	1'-6	1'-7	1'-8	1'-4	1'-5	1'-6	1'-7	1'-8	1'-4	1'-5	1'-6	1'-7	1'-8	1'-4	1'-5	1'-6	1'-7	1'-8	1'-4	1'-5	1'-6	1'-7	1'-9
	C	2'-2	2'-7	3'-0	3'-8	4'-5	2'-3	2'-8	3'-1	3'-9	4'-7	2'-4	2'-9	3'-2	3'-11	4'-9	2'-5	2'-10	3'-4	4'-1	4'-11	2'-6	2'-11	3'-5	4'-2	5'-0
	D	5'-6	6'-1	6'-8	7'-6	8'-5	5'-7	6'-2	6'-9	7'-7	8'-7	5'-8	6'-3	6'-10	7'-9	8'-9	5'-9	6'-4	7'-0	7'-11	8'-11	5'-10	6'-5	7'-1	8'-0	9'-1
	E	13'-0	14'-6	15'-6	17'-0	18'-6	12'-0	13'-6	15'-0	16'-0	17'-6	11'-6	13'-0	14'-0	15'-6	16'-6	11'-0	12'-6	13'-6	15'-0	16'-0	11'-0	12'-0	13'-0	14'-6	15'-6
	F	4'-4	5'-0	5'-8	6'-8	7'-9	4'-7	5'-3	5'-11	7'-0	8'-3	4'-10	5'-6	6'-2	7'-4	8'-8	5'-0	5'-8	6'-6	7'-8	9'-0	5'-1	5'-10	6'-8	7'-10	9'-3
	G	17'-6	19'-6	21'-0	23'-0	25'-0	18'-6	20'-6	22'-6	24'-6	26'-6	20'-0	22'-0	24'-6	26'-6	28'-6	21'-6	24'-0	26'-6	29'-0	31'-0	24'-0	26'-6	29'-0	31'-6	34'-6
	J	4'-2	4'-10	5'-5	6'-5	7'-6	4'-3	4'-11	5'-7	6'-6	7'-8	4'-5	5'-0	5'-8	6'-9	7'-11	4'-6	5'-2	5'-11	6'-11	8'-2	4'-7	5'-3	6'-0	7'-1	8'-4
	K	2'-0⅞	2'-2⅜	2'-3¾	2'-5⅛	2'-6⅝	2'-2⅝	2'-4⅛	2'-5¾	2'-7¼	2'-8⅞	2'-5	2'-6¾	2'-8½	2'-10¼	3'-0	2'-8⅜	2'-10¾	3'-0⅜	3'-2⅜	3'-4⅜	3'-1½	3'-3⅞	3'-6¼	3'-8⅝	3'-11
	L	2'-7	2'-10	3'-4	3'-7	3'-10	3'-1	3'-4	3'-7	4'-1	4'-4	3'-4	3'-7	4'-1	4'-4	4'-10	3'-7	3'-10	4'-4	4'-7	5'-1	3'-7	4'-1	4'-7	4'-10	5'-4
	M	2'-11	3'-2	3'-8	3'-11	4'-3	3'-1	3'-6	3'-10	4'-2	4'-7	3'-4	3'-9	4'-0	4'-6	4'-11	3'-8	4'-1	4'-5	4'-10	5'-4	4'-0	4'-6	4'-11	5'-5	5'-9

	Skew ∡	25°					30°					35°					40°					45°				
	Height H	8'	9'	10'	11'	12'	8'	9'	10'	11'	12'	8'	9'	10'	11'	12'	8'	9'	10'	11'	12'	8'	9'	10'	11'	12'
4 : 1 Slope Dimensions	A	2'-0	2'-1	2'-2	2'-3	2'-4	2'-0	2'-1	2'-2	2'-3	2'-4	2'-0	2'-1	2'-2	2'-3	2'-4	2'-0	2'-1	2'-2	2'-3	2'-4	2'-0	2'-1	2'-2	2'-3	2'-4
	B	1'-4	1'-5	1'-6	1'-7	1'-8	1'-4	1'-5	1'-6	1'-7	1'-9	1'-4	1'-5	1'-6	1'-9	1'-11	1'-4	1'-6	1'-9	1'-11	2'-2	1'-6	1'-9	2'-0	2'-3	2'-5
	C	1'-10	2'-2	2'-6	3'-1	3'-9	1'-10	2'-2	2'-7	3'-1	3'-8	1'-11	2'-3	2'-7	2'-11	3'-7	1'-11	2'-2	2'-4	2'-10	3'-4	1'-9	1'-11	2'-1	2'-6	3'-2
	D	5'-2	5'-8	6'-2	6'-11	7'-9	5'-2	5'-8	6'-3	6'-11	7'-9	5'-3	5'-9	6'-3	6'-11	7'-10	5'-3	5'-9	6'-3	7'-0	7'-10	5'-3	5'-9	6'-3	7'-0	7'-11
	E	20'-0	22'-0	24'-0	22'-6	28'-6	18'-6	20'-6	22'-6	24'-6	26'-6	17'-0	19'-0	20'-6	22'-6	24'-6	16'-0	17'-6	19'-6	21'-0	23'-0	15'-0	17'-0	18'-6	20'-0	22'-0
	F	3'-11	4'-5	5'-0	5'-11	6'-11	4'-0	4'-7	5'-3	6'-1	7'-1	4'-3	4'-10	5'-5	6'-2	7'-4	4'-3	4'-10	5'-5	6'-5	7'-5	4'-3	4'-10	5'-6	6'-5	7'-7
	G	26'-0	29'-0	32'-0	35'-0	37'-6	27'-6	30'-6	33'-6	36'-6	39'-6	29'-0	32'-0	35'-6	38'-6	41'-6	30'-6	34'-0	37'-6	41'-0	44'-0	33'-0	36'-6	40'-0	43'-6	47'-6
	J	3'-9	4'-3	4'-10	5'-8	6'-8	3'-9	4'-3	4'-11	5'-8	6'-8	3'-10	4'-5	4'-11	5'-8	6'-9	3'-10	4'-5	4'-11	5'-9	6'-9	3'-10	4'-5	4'-11	5'-9	6'-10
	K	2'-0⅞	2'-2⅜	2'-3¾	2'-5⅛	2'-6⅝	2'-2⅝	2'-4⅛	2'-5¾	2'-7¼	2'-8⅞	2'-5	2'-6¾	2'-8½	2'-10¼	3'-0	2'-8⅜	2'-10¾	3'-0⅜	3'-2⅜	3'-4⅜	3'-1½	3'-3⅞	3'-6¼	3'-8⅝	3'-11
	L	4'-1	4'-7	5'-1	5'-5	5'-11	4'-5	4'-11	5'-5	5'-11	6'-5	4'-10	5'-4	5'-11	6'-5	6'-11	5'-1	5'-8	6'-2	6'-10	7'-4	5'-4	5'-10	6'-5	7'-1	7'-7
	M	4'-6	4'-11	5'-5	5'-11	6'-5	4'-8	5'-2	5'-8	6'-2	6'-9	4'-11	5'-6	6'-0	6'-7	7'-1	5'-3	5'-10	6'-5	6'-11	7'-7	5'-7	6'-2	6'-10	7'-6	8'-1

	Skew ∡	25°	30°	35°	40°	45°
	Height H	8'	8'	8'	8'	8'
6 : 1 Slope Dimensions	A	2'-0	2'-0	2'-0	2'-0	2'-0
	B	1'-4	1'-4	1'-6	1'-8	1'-10
	C	1'-9	1'-9	1'-7	1'-5	1'-3
	D	5'-1	5'-1	5'-1	5'-1	5'-1
	E	24'-0	22'-0	20'-0	18'-6	17'-6
	F	3'-9	3'-11	4'-0	4'-0	4'-1
	G	31'-6	32'-6	34'-0	35'-6	37'-6
	J	3'-8	3'-8	3'-8	3'-8	3'-8
	K	2'-0⅞	2'-2⅝	2'-5	2'-8⅜	3'-1½
	L	5'-1	5'-5	5'-9	6'-0	6'-2
	M	5'-4	5'-7	5'-10	6'-1	6'-5

Skew ∡	'e' Bars Span 8'	10'	12'
25° to 30°	#6	#6	#7
35°	#6	#7	#8
40° & 45°	#6	#7	#9

	Height H	'c' Bars Long Wing Skew ∡ 25°	30°	35°	40°	45°	Dim. 'X'	Short Wing All Skew ∡	Dim. 'X'	•'d' Bars Long Wing All Skew ∡	Short Wing All Skew ∡
2:1 Slope	8'	4-#5	4-#5	5-#5	5-#5	6-#5	2'-3	-	-	-	-
	9'	6-#5	7-#5	8-#5	9-#5	10-#5	3'-3	2-#5	2'-3	4-#5	-
	10'	9-#7	10-#7	11-#7	13-#7	15-#7	6'-0	4-#5	3'-3	8-#5	-
	11'	11-#7	12-#7	14-#7	16-#7	19-#7	7'-0	6-#6	4'-3	13-#7	3-#5
	12'	7-#7	8-#7	9-#7	10-#7	12-#7	5'-3	6-#6	4'-6	9-#7	5-#5
4:1 Slope	8'	3-#5	4-#5	4-#5	5-#5	5-#5	2'-3	-	-	-	-
	9'	8-#5	9-#5	10-#5	11-#5	13-#5	2'-6	4-#5	2'-3	-	-
	10'	14-#6	15-#6	17-#6	19-#6	23-#6	3'-9	8-#5	3'-3	-	-
	11'	19-#7	21-#7	24-#7	27-#7	31-#7	6'-3	12-#6	4'-3	10-#5	5-#5
	12'	10-#5	11-#5	12-#5	14-#5	16-#5	2'-9	12-#6	4'-6	8-#5	8-#5

• 'd' bars alternate with 'a' bars at high end of wall

Height H	Short Wing 'a' Bars	Short Wing 'b' Bars	Long Wing 'a' Bars	Long Wing 'b' Bars
8'	#4	#5	#6	#5
9'	#5	#5	#6	#5
10'	#6	#5	#6	#5
11'	#6	#5	#6	#5
12'	#6	#6	#7	#7

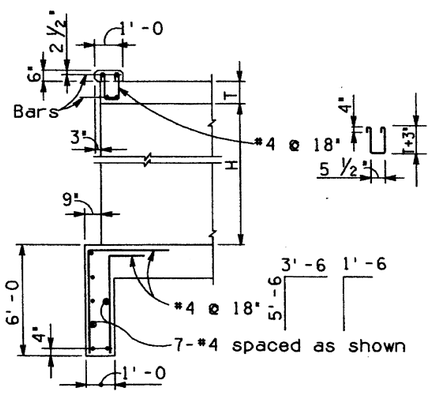

SECTION A-A

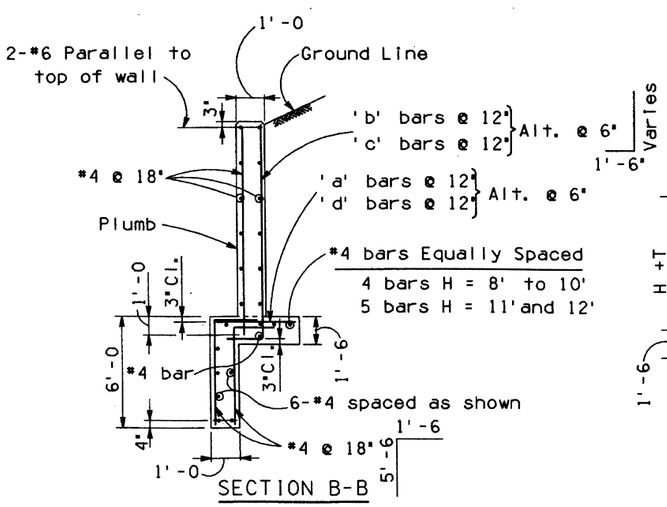

SECTION B-B

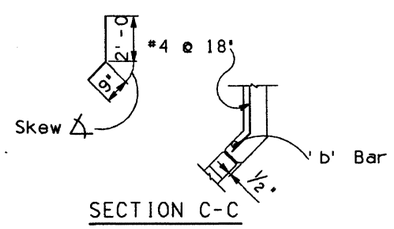

SECTION C-C

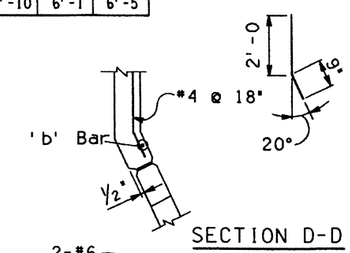

SECTION D-D

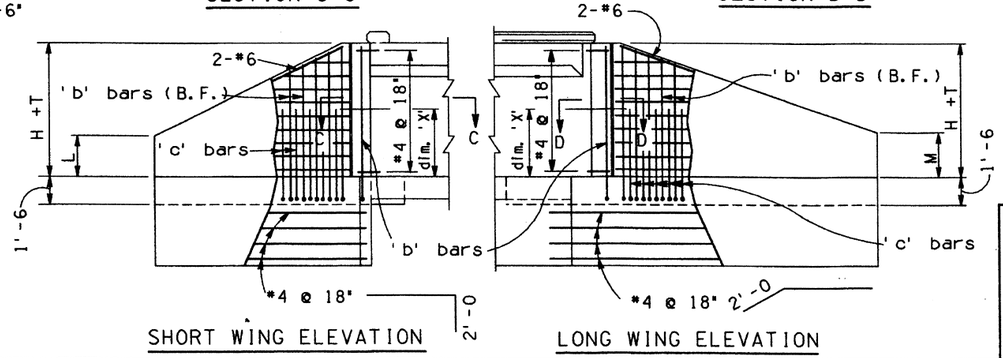

SHORT WING ELEVATION

LONG WING ELEVATION

NOTE:

For General Notes and Miscellaneous Details see B-01.10.
For Headwall Quantities see B-05.10, B-05.20 and B-05.30.

NO	DESCRIPTION OF REVISIONS	MADE BY	DATE
1	Revised cutoff wall	C.H.	6-88
2			
3			
4			

DESIGN
DRAWN
CHECKED

CADD FILENAME= 2FA
VIEW NAME=

DESIGN APPROVED
J. D. Davis

APPROVED FOR DISTRIBUTION
J. A. Bryant, II.

ARIZONA
DEPARTMENT OF TRANSPORTATION
HIGHWAYS DIVISION
STANDARD DRAWINGS

OUTLET WINGS
CULVERT HEIGHT 8' to 12'
SKEW 25° to 45°

REVISION 7-88

STANDARD NO. B-04.60

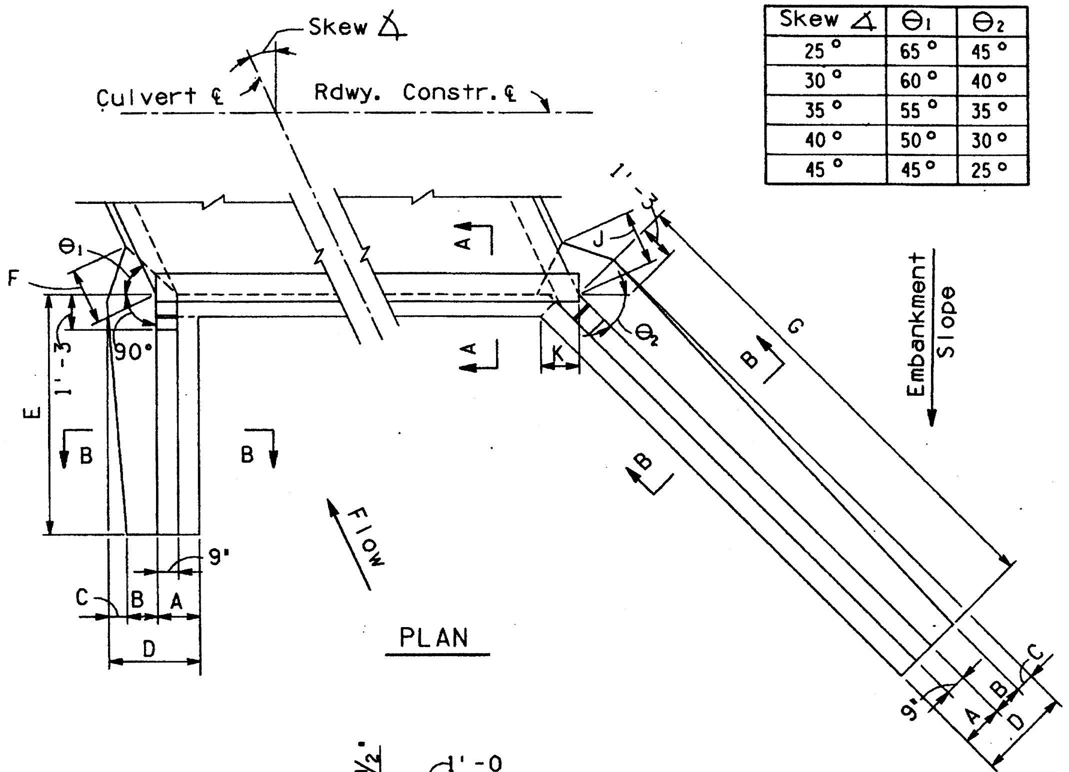

PLAN

Skew ∡	Θ1	Θ2
25°	65°	45°
30°	60°	40°
35°	55°	35°
40°	50°	30°
45°	45°	25°

2 : 1 Slope

Skew ∡	25°					30°					35°					40°					45°				
Height H	3'	4'	5'	6'	7'	3'	4'	5'	6'	7'	3'	4'	5'	6'	7'	3'	4'	5'	6'	7'	3'	4'	5'	6'	7'
A	1'-6	1'-6	1'-6	1'-6	1'-6	1'-6	1'-6	1'-6	1'-6	1'-6	1'-6	1'-6	1'-6	1'-6	1'-6	1'-6	1'-6	1'-6	1'-6	1'-6	1'-6	1'-6	1'-6	1'-6	1'-6
B	9"	1'-0	1'-1	1'-2	1'-3	9"	1'-0	1'-1	1'-2	1'-3	9"	1'-0	1'-1	1'-2	1'-3	9"	1'-0	1'-1	1'-2	1'-3	9"	1'-0	1'-1	1'-2	1'-3
C	6"	9"	1'-3	1'-8	2'-1	7"	10"	1'-3	1'-9	2'-2	7"	11"	1'-4	1'-10	2'-3	8"	11"	1'-5	1'-10	2'-4	8"	1'-0	1'-6	1'-11	2'-5
D	2'-9	3'-3	3'-10	4'-4	4'-10	2'-10	3'-4	3'-10	4'-5	4'-11	2'-10	3'-5	3'-11	4'-6	5'-0	2'-11	3'-5	4'-0	4'-6	5'-1	2'-11	3'-6	4'-1	4'-7	5'-2
E	6'-0	7'-6	8'-6	10'-0	11'-6	5'-6	7'-0	8'-0	9'-6	11'-0	5'-6	6'-6	8'-0	9'-0	10'-6	5'-0	6'-6	7'-6	8'-6	10'-0	5'-0	6'-0	7'-0	8'-6	9'-6
F	1'-4	2'-0	2'-9	3'-5	4'-1	1'-6	2'-2	2'-11	3'-8	4'-4	1'-7	2'-4	3'-1	3'-10	4'-7	1'-8	2'-5	3'-3	3'-11	4'-9	1'-8	2'-6	3'-4	4'-1	4'-10
G	8'-0	10'-0	11'-6	13'-6	15'-6	8'-6	10'-6	12'-6	14'-6	16'-6	9'-0	11'-0	13'-6	15'-6	17'-6	10'-0	12'-0	14'-6	17'-0	19'-6	10'-6	13'-6	16'-0	18'-6	21'-0
J	1'-3	1'-11	2'-8	3'-4	4'-0	1'-5	2'-0	2'-8	3'-5	4'-1	1'-5	2'-2	2'-9	3'-6	4'-2	1'-6	2'-2	2'-11	3'-6	4'-3	1'-6	2'-3	3'-0	3'-8	4'-5
K	1'-4½	1'-4½	1'-4½	1'-4½	1'-4½	1'-5¼	1'-5¼	1'-5¼	1'-5¼	1'-5¼	1'-6½	1'-6½	1'-6½	1'-6½	1'-6½	1'-8⅜	1'-8⅜	1'-8⅜	1'-8⅜	1'-8⅜	1'-11¼	1'-11¼	1'-11¼	1' 11¼	1'-11¼
L	1'-1	1'-4	1'-10	2'-1	2'-4	1'-4	1'-7	2'-1	2'-4	2'-7	1'-4	1'-10	2'-1	2'-7	2'-10	1'-7	1'-10	2'-4	2'-10	3'-1	1'-7	2'-1	2'-7	2'-10	3'-4
M	1'-3	1'-6	2'-0	2'-3	2'-7	1'-4	1'-8	2'-1	2'-5	2'-9	1'-6	1'-11	2'-2	2'-7	3'-1	1'-7	2'-1	2'-5	2'-10	3'-2	1'-10	2'-3	2'-8	3'-2	3'-8

4 : 1 Slope

Skew ∡	25°					30°					35°					40°					45°				
Height H	3'	4'	5'	6'	7'	3'	4'	5'	6'	7'	3'	4'	5'	6'	7'	3'	4'	5'	6'	7'	3'	4'	5'	6'	7'
A	1'-6	1'-6	1'-6	1'-6	1'-6	1'-6	1'-6	1'-6	1'-6	1'-6	1'-6	1'-6	1'-6	1'-6	1'-6	1'-6	1'-6	1'-6	1'-6	1'-6	1'-6	1'-6	1'-6	1'-6	1'-6
B	9"	1'-0	1'-1	1'-2	1'-3	9"	1'-0	1'-1	1'-2	1'-3	9"	1'-0	1'-1	1'-2	1'-3	9"	1'-0	1'-1	1'-2	1'-4	9"	1'-0	1'-1	1'-3	1'-7
C	4"	7"	1'-0	1'-5	1'-10	4"	7"	1'-0	1'-5	1'-10	4"	7"	1'-0	1'-5	1'-10	4"	7"	1'-0	1'-5	1'-9	4"	7"	1'-0	1'-5	1'-7
D	2'-7	3'-1	3'-7	4'-1	4'-7	2'-7	3'-1	3'-7	4'-1	4'-7	2'-7	3'-1	3'-7	4'-1	4'-7	2'-7	3'-1	3'-7	4'-1	4'-7	2'-7	3'-1	3'-7	4'-2	4'-8
E	9'-0	11'-0	13'-6	15'-6	17'-6	8'-6	10'-6	12'-6	14'-6	16'-6	7'-6	9'-6	11'-6	13'-6	15'-0	7'-0	9'-0	10'-6	12'-6	14'-0	7'-0	8'-6	10'-0	12'-0	13'-6
F	1'-2	1'-10	2'-5	3'-1	3'-9	1'-2	1'-10	2'-6	3'-3	3'-11	1'-2	1'-11	2'-7	3'-3	4'-0	1'-3	1'-11	2'-7	3'-4	4'-0	1'-3	1'-11	2'-8	3'-6	4'-2
G	12'-0	14'-6	17'-6	20'-6	23'-6	12'-6	15'-6	18'-6	21'-6	24'-6	13'-0	16'-0	19'-6	22'-6	25'-6	14'-0	17'-0	20'-6	24'-0	27'-6	15'-0	18'-6	22'-0	25'-6	29'-0
J	1'-1	1'-9	2'-4	3'-0	3'-8	1'-1	1'-9	2'-4	3'-0	3'-8	1'-1	1'-9	2'-4	3'-0	3'-8	1'-1	1'-9	2'-4	3'-0	3'-8	1'-1	1'-9	2'-4	3'-1	3'-9
K	1'-4½	1'-4½	1'-4½	1'-4½	1'-4½	1'-5¼	1'-5¼	1'-5¼	1'-5¼	1'-5¼	1'-6½	1'-6½	1'-6½	1'-6½	1'-6½	1'-8⅜	1'-8⅜	1'-8⅜	1'-8⅜	1'-8⅜	1-11¼	1'-11¼	1'-11¼	1'-11¼	1'-11¼
L	1'-10	2'-4	2'-8	3'-2	3'-8	1'-11	2'-5	2'-11	3'-5	3'-11	2'-2	2'-8	3'-2	3'-8	4'-4	2'-4	2'-10	3'-5	3'-11	4'-7	2'-4	2'-11	3'-7	4'-1	4'-8
M	1'-11	2'-6	3'-0	3'-5	3'-11	2'-1	2'-7	3'-1	3'-7	4'-2	2'-2	2'-9	3'-3	3'-10	4'-5	2'-4	2'-11	3'-6	4'-1	4'-8	2'-6	3'-1	3'-9	4'-4	5'-0

6 : 1 Slope

Skew ∡	25°					30°					35°					40°					45°				
Height H	3'	4'	5'	6'	7'	3'	4'	5'	6'	7'	3'	4'	5'	6'	7'	3'	4'	5'	6'	7'	3'	4'	5'	6'	7'
A	1'-6	1'-6	1'-6	1'-6	1'-6	1'-6	1'-6	1'-6	1'-6	1'-6	1'-6	1'-6	1'-6	1'-6	1'-6	1'-6	1'-6	1'-6	1'-6	1'-6	1'-6	1'-6	1'-6	1'-6	1'-6
B	9"	1'-0	1'-1	1'-2	1'-4	9"	1'-0	1'-1	1'-2	1'-6	9"	1'-0	1'-1	1'-3	1'-7	9"	1'-0	1'-1	1'-4	1'-8	9"	1'-0	1'-2	1'-6	1'-10
C	3"	6"	11"	1'-4	1'-8	3"	6"	11"	1'-4	1'-6	3"	6"	11"	1'-3	1'-5	3"	6"	11"	1'-2	1'-4	3'	6"	10"	1'-0	1'-2
D	2'-6	3'-0	3'-6	4'-0	4'-6	2'-6	3'-0	3'-6	4'-0	4'-6	2'-6	3'-0	3'-6	4'-0	4'-6	2'-6	3'-0	3'-6	4'-0	4'-6	2'-6	3'-0	3'-6	4'-0	4'-6
E	11'-0	13'-6	16'-0	19'-0	21'-6	10'-0	12'-6	14'-6	17'-0	19'-6	9'-0	11'-6	13'-6	15'-6	18'-0	8'-6	10'-6	12'-6	14'-6	16'-6	8'-0	10'-0	12'-0	13'-6	15'-6
F	1'-0	1'-8	2'-4	3'-0	3'-8	1'-1	1'-9	2'-5	3'-1	3'-9	1'-1	1'-9	2'-6	3'-2	3'-10	1'-1	1'-10	2'-6	3'-3	3'-11	1'-1	1'-10	2'-6	3'-3	3'-11
G	14'-0	17'-6	21'-0	24'-6	28'-0	14'-6	18'-6	22'-0	25'-6	29'-0	15'-6	19'-0	23'-0	26'-6	30'-6	16'-0	20'-0	24'-0	28'-0	32'-0	17'-0	21'-0	25'-0	29'-6	33'-6
J	1'-0	1'-7	2'-3	2'-11	3'-6	1'-0	1'-7	2'-3	2'-11	3'-6	1'-0	1'-7	2'-3	2'-11	3'-6	1'-0	1'-7	2'-3	2'-11	3'-6	1'-0	1'-7	2'-3	2'-11	3'-6
K	1'-4½	1'-4½	1'-4½	1'-4½	1'-4½	1'-5¼	1'-5¼	1'-5¼	1'-5¼	1'-5¼	1'-6½	1'-6½	1'-6½	1'-6½	1'-6½	1'-8⅜	1'-8⅜	1'-8⅜	1'-8⅜	1'-8⅜	1'-11¼	1'-11¼	1'-11¼	1'-11¼	1'-11¼
L	2'-3	2'-10	3'-5	3'-11	4'-6	2'-5	3'-0	3'-8	4'-3	4'-10	2'-7	3'-2	3'-10	4'-6	5'-1	2'-8	3'-4	4'-0	4'-8	5'-4	2'=9	3'-5	4'-1	4'-10	5'-6
M	2'-5	3'-0	3'-7	4'-2	4'-9	2'-6	3'-1	3'-8	4'-4	4'-11	2'-7	3'-3	3'-10	4'-6	5'-2	2'-9	3'-5	4'-1	4'-9	5'-5	2'-10	3'-7	4'-4	5'-0	5'-8

(Rows A–M: Dimensions)

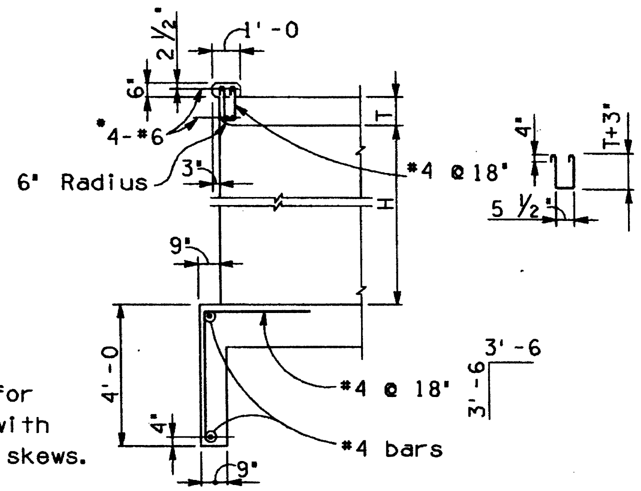

*Use 4-#7 for 10' spans with 35° to 45° skews.

SECTION A-A

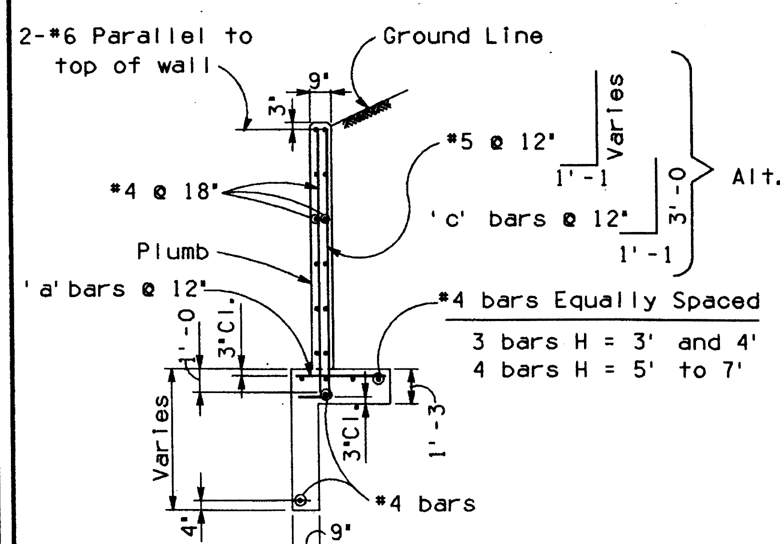

SECTION B-B

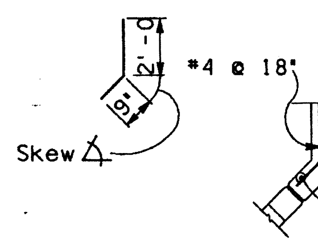

SECTION C-C

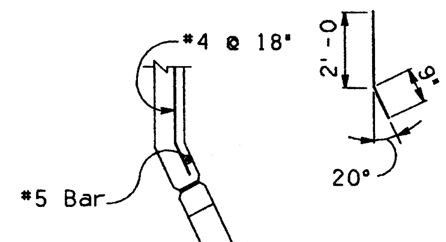

SECTION D-D

'c' Bars Long Wingwall			
	Skew ∡	2 : 1 Slope	4 : 1 Slope
H = 7'	25°	3 - #5	3 - #5
	30°	3 - #5	3 - #5
	35°	4 - #5	4 - #5
	40°	4 - #5	4 - #5
	45°	5 - #5	4 - #5

'a' Bars		
Height H	Short Wing	Long Wing
3'	#4	#4
4'	#4	#4
5'	#4	#4
6'	#4	#5
7'	#4	#6

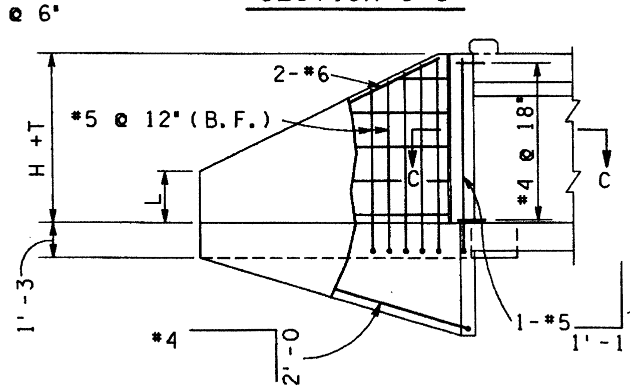

SHORT WING ELEVATION

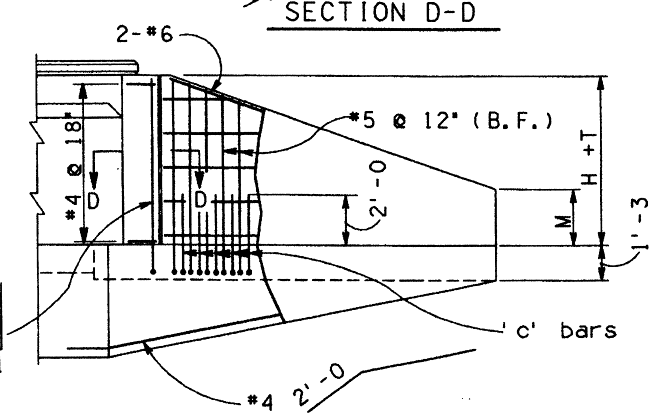

LONG WING ELEVATION

NOTE :

For General Notes and Miscellaneous Details see B-01.10.
For Headwall Quantities see B-05.10, B-05.20 and B-05.30.

DESIGN APPROVED	ARIZONA DEPARTMENT OF TRANSPORTATION HIGHWAYS DIVISION STANDARD DRAWINGS	REVISION
APPROVED FOR DISTRIBUTION	INLET WINGS CULVERT HEIGHT 3' to 7' SKEW 25° to 45°	STANDARD NO. B-04.70

NO	DESCRIPTION OF REVISIONS	MADE BY	DATE
1			
2			
3			
4			

DESIGN
DRAWN
CHECKED

CADD FILENAME= ZFA
VIEW NAME=

Skew ∡	Θ_1	Θ_2
25°	65°	45°
30°	60°	40°
35°	55°	35°
40°	50°	30°
45°	45°	25°

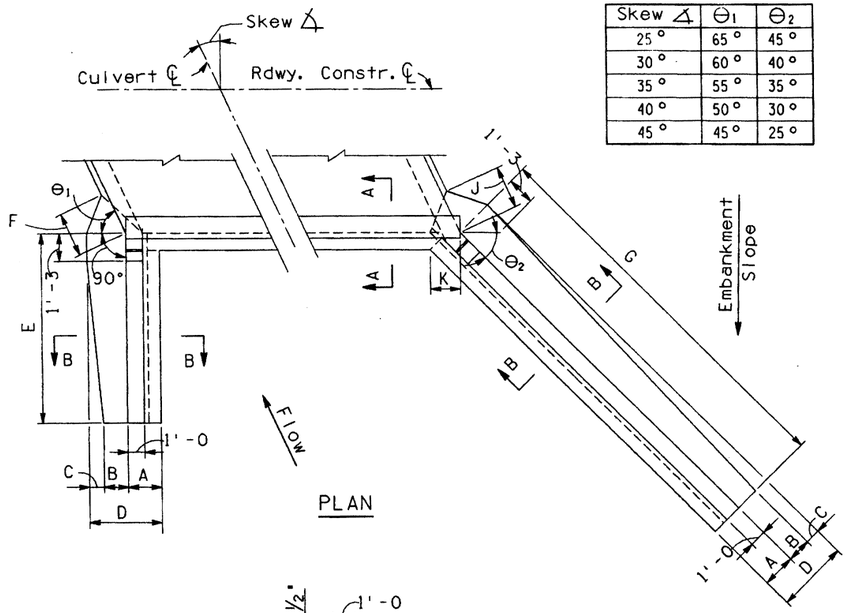

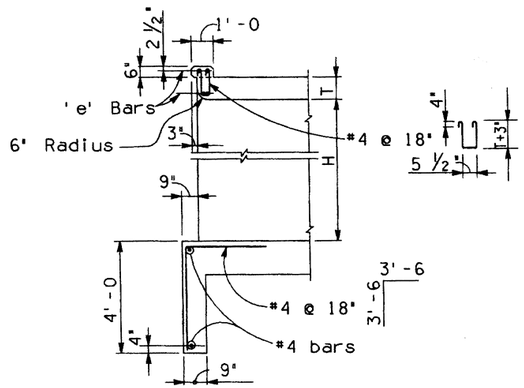

SECTION A-A

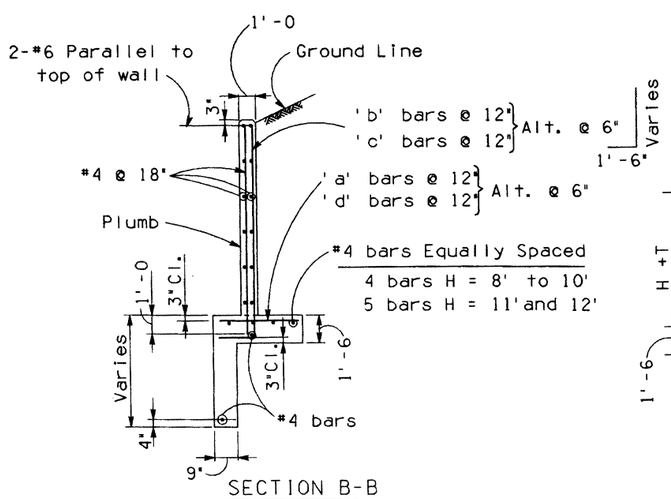

SECTION B-B

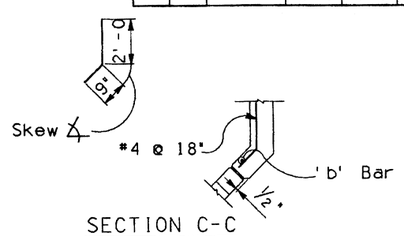

SECTION C-C

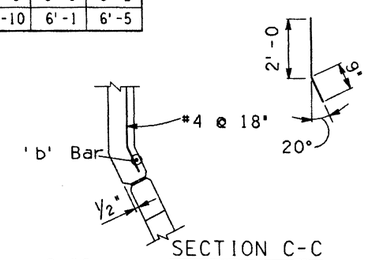

SECTION C-C

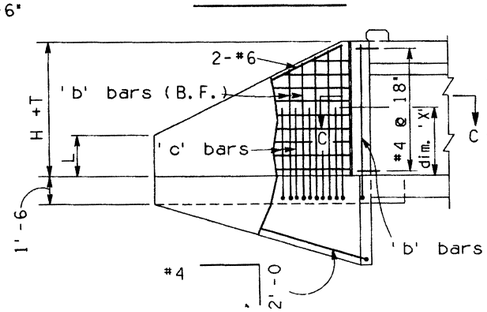

SHORT WING ELEVATION

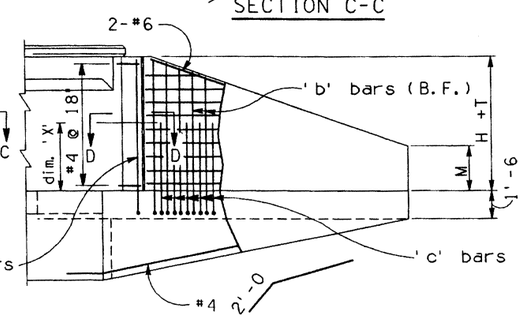

LONG WING ELEVATION

	Skew ∡	25°					30°					35°					40°					45°				
	Height H	8'	9'	10'	11'	12'	8'	9'	10'	11'	12'	8'	9'	10'	11'	12'	8'	9'	10'	11'	12'	8'	9'	10'	11'	12'
2 : 1 Slope Dimensions	A	2'-0	2'-1	2'-2	2'-3	2'-4	2'-0	2'-1	2'-2	2'-3	2'-4	2'-0	2'-1	2'-2	2'-3	2'-4	2'-0	2'-1	2'-2	2'-3	2'-4	2'-0	2'-1	2'-2	2'-3	2'-4
	B	1'-4	1'-5	1'-6	1'-7	1'-8	1'-4	1'-5	1'-6	1'-7	1'-8	1'-4	1'-5	1'-6	1'-7	1'-8	1'-4	1'-5	1'-6	1'-7	1'-8	1'-4	1'-5	1'-6	1'-7	1'-9
	C	2'-2	2'-7	3'-0	3'-8	4'-5	2'-3	2'-8	3'-1	3'-9	4'-7	2'-4	2'-9	3'-2	3'-11	4'-9	2'-5	2'-10	3'-4	4'-1	4'-11	2'-6	2'-11	3'-5	4'-2	5'-0
	D	5'-6	6'-1	6'-8	7'-6	8'-5	5'-7	6'-2	6'-9	7'-7	8'-7	5'-8	6'-3	6'-10	7'-9	8'-9	5'-9	6'-4	7'-0	7'-11	8'-11	5'-10	6'-5	7'-1	8'-0	9'-1
	E	13'-0	14'-6	15'-6	17'-0	18'-6	12'-0	13'-6	15'-0	16'-0	17'-6	11'-6	13'-0	14'-0	15'-6	16'-6	11'-0	12'-6	13'-6	15'-0	16'-0	11'-0	12'-0	13'-0	14'-6	15'-6
	F	4'-4	5'-0	5'-8	6'-8	7'-9	4'-7	5'-3	5'-11	7'-0	8'-3	4'-10	5'-6	6'-2	7'-4	8'-8	5'-0	5'-8	6'-6	7'-8	9'-0	5'-1	5'-10	6'-8	7'-10	9'-3
	G	17'-6	19'-6	21'-0	23'-0	25'-0	18'-6	20'-6	22'-6	24'-6	26'-6	20'-0	22'-0	24'-6	26'-6	28'-6	21'-6	24'-0	26'-6	29'-0	31'-0	24'-0	26'-6	29'-0	31'-6	34'-6
	J	4'-2	4'-10	5'-5	6'-5	7'-6	4'-3	4'-11	5'-7	6'-6	7'-8	4'-5	5'-0	5'-8	6'-9	7'-11	4'-6	5'-2	5'-11	6'-11	8'-2	4'-7	5'-3	6'-0	7'-1	8'-4
	K	2'-0 7/8	2'-2 3/8	2'-3 3/4	2'-5 1/8	2'-6 5/8	2'-2 5/8	2'-4 1/8	2'-5 3/4	2'-7 1/4	2'-8 7/8	2'-5	2'-6 3/4	2'-8 1/2	2'-10 1/4	3'-0	2'-8 3/8	2'-10 3/8	3'-0 3/8	3'-2 3/8	3'-4 3/8	3'-1 1/2	3'-3 7/8	3'-6 1/4	3'-8 5/8	3'-11
	L	2'-7	2'-10	3'-4	3'-7	3'-10	3'-1	3'-4	3'-7	4'-1	4'-4	3'-4	3'-7	4'-1	4'-4	4'-10	3'-7	3'-10	4'-4	4'-7	5'-1	3'-7	4'-1	4'-7	4'-10	5'-4
	M	2'-11	3'-2	3'-8	3'-11	4'-3	3'-1	3'-6	3'-10	4'-2	4'-7	3'-4	3'-9	4'-0	4'-6	4'-11	3'-8	4'-1	4'-5	4'-10	5'-4	4'-0	4'-6	4'-11	5'-5	5'-9

	Skew ∡	25°					30°					35°					40°					45°				
	Height H	8'	9'	10'	11'	12'	8'	9'	10'	11'	12'	8'	9'	10'	11'	12'	8'	9'	10'	11'	12'	8'	9'	10'	11'	12'
4 : 1 Slope Dimensions	A	2'-0	2'-1	2'-2	2'-3	2'-4	2'-0	2'-1	2'-2	2'-3	2'-4	2'-0	2'-1	2'-2	2'-3	2'-4	2'-0	2'-1	2'-2	2'-3	2'-4	2'-0	2'-1	2'-2	2'-3	2'-4
	B	1'-4	1'-5	1'-6	1'-7	1'-8	1'-4	1'-5	1'-6	1'-7	1'-9	1'-4	1'-5	1'-6	1'-9	1'-11	1'-4	1'-6	1'-9	1'-11	2'-2	1'-6	1'-9	2'-0	2'-3	2'-5
	C	1'-10	2'-2	2'-6	3'-1	3'-9	1'-10	2'-2	2'-7	3'-1	3'-8	1'-11	2'-3	2'-7	2'-11	3'-7	1'-11	2'-2	2'-4	2'-10	3'-4	1'-9	1'-11	2'-1	2'-6	3'-2
	D	5'-2	5'-8	6'-2	6'-11	7'-9	5'-2	5'-8	6'-3	6'-11	7'-9	5'-3	5'-9	6'-3	6'-11	7'-10	5'-3	5'-9	6'-3	7'-0	7'-10	5'-3	5'-9	6'-3	7'-0	7'-11
	E	20'-0	22'-0	24'-0	22'-6	28'-6	18'-6	20'-6	22'-6	24'-6	26'-6	17'-0	19'-0	20'-6	22'-6	24'-6	16'-0	17'-6	19'-6	21'-0	23'-0	15'-0	17'-0	18'-6	20'-0	22'-0
	F	3'-11	4'-5	5'-0	5'-11	6'-11	4'-0	4'-7	5'-3	6'-1	7'-1	4'-3	4'-10	5'-5	6'-2	7'-4	4'-3	4'-10	5'-5	6'-5	7'-5	4'-3	4'-10	5'-6	6'-5	7'-7
	G	26'-0	29'-0	32'-0	35'-0	37'-6	27'-6	30'-6	33'-6	36'-6	39'-6	29'-0	32'-0	35'-6	38'-6	41'-6	30'-6	34'-0	37'-6	41'-0	44'-0	33'-0	36'-6	40'-0	43'-6	47'-6
	J	3'-9	4'-3	4'-10	5'-8	6'-8	3'-9	4'-3	4'-11	5'-8	6'-8	3'-10	4'-5	4'-11	5'-8	6'-9	3'-10	4'-5	4'-11	5'-9	6'-9	3'-10	4'-5	4'-11	5'-9	6'-10
	K	2'-0 7/8	2'-2 3/8	2'-3 3/4	2'-5 1/8	2'-6 5/8	2'-2 5/8	2'-4 1/8	2'-5 3/4	2'-7 1/4	2'-8 7/8	2'-5	2'-6 3/4	2'-8 1/2	2'-10 1/4	3'-0	2'-8 3/8	2'-10 3/8	3'-0 3/8	3'-2 3/8	3'-4 3/8	3'-1 1/2	3'-3 7/8	3'-6 1/4	3'-8 5/8	3'-11
	L	4'-1	4'-7	5'-1	5'-5	5'-11	4'-5	4'-11	5'-5	5'-11	6'-5	4'-10	5'-4	5'-11	6'-5	6'-11	5'-1	5'-8	6'-2	6'-10	7'-4	5'-4	5'-10	6'-5	7'-1	7'-7
	M	4'-6	4'-11	5'-5	5'-11	6'-5	4'-8	5'-2	5'-8	6'-2	6'-9	4'-11	5'-6	6'-0	6'-7	7'-1	5'-3	5'-10	6'-5	6'-11	7'-7	5'-7	6'-2	6'-10	7'-6	8'-1

	Skew ∡	25°	30°	35°	40°	45°
	Height H	8'	8'	8'	8'	8'
6 : 1 Slope Dimensions	A	2'-0	2'-0	2'-0	2'-0	2'-0
	B	1'-4	1'-4	1'-6	1'-8	1'-10
	C	1'-9	1'-9	1'-7	1'-5	1'-3
	D	5'-1	5'-1	5'-1	5'-1	5'-1
	E	24'-0	22'-0	20'-0	18'-6	17'-6
	F	3'-9	3'-11	4'-0	4'-0	4'-1
	G	31'-6	32'-6	34'-0	35'-6	37'-6
	J	3'-8	3'-8	3'-8	3'-8	3'-8
	K	2'-0 7/8	2'-2 5/8	2'-5	2'-8 3/8	3'-1 1/2
	L	5'-1	5'-5	5'-9	6'-0	6'-2
	M	5'-4	5'-7	5'-10	6'-1	6'-5

Skew ∡	'e' Bars Span 8'	10'	12'
25° to 30°	#6	#6	#7
35°	#6	#7	#8
40° & 45°	#6	#7	#9

	Height H	'c' Bars Long Wing Skew ∡ 25°	30°	35°	40°	45°	Dim. 'X'	Short Wing All Skew ∡	Short Wing Dim. 'X'	*'d' Bars Long Wing All Skew ∡	*'d' Bars Short Wing All Skew ∡
2 : 1 Slope	8'	4 -#5	4 -#5	5 -#5	5 -#5	6 -#5	2'-3	-	-	-	-
	9'	6 -#5	7 -#5	8 -#5	9 -#5	10 -#5	3'-3	2 -#5	2'-3	4 -#5	-
	10'	9 -#7	10 -#7	11 -#7	13 -#7	15 -#7	6'-0	4 -#5	3'-3	8 -#5	-
	11'	11 -#7	12 -#7	14 -#7	16 -#7	19 -#7	7'-0	6 -#6	4'-3	13 -#7	3 -#5
	12'	7 -#7	8 -#7	9 -#7	10 -#7	12 -#7	5'-3	6 -#6	4'-6	9 -#7	5 -#5
4 : 1 Slope	8'	3 -#5	4 -#5	4 -#5	5 -#5	5 -#5	2'-3	-	-	-	-
	9'	8 -#5	9 -#5	10 -#5	11 -#5	13 -#5	2'-6	4 -#5	2'-3	-	-
	10'	14 -#6	15 -#6	17 -#6	19 -#6	23 -#6	3'-9	8 -#5	3'-3	-	-
	11'	19 -#7	21 -#7	24 -#7	27 -#7	31 -#7	6'-3	12 -#6	4'-3	10 -#5	5 -#5
	12'	10 -#5	11 -#5	12 -#5	14 -#5	16 -#5	2'-9	12 -#6	4'-6	8 -#5	8 -#5

* 'd' bars alternate with 'a' bars at high end of wall

Height H	Short Wing 'a' Bars	Short Wing 'b' Bars	Long Wing 'a' Bars	Long Wing 'b' Bars
8'	#4	#5	#6	#5
9'	#5	#5	#6	#5
10'	#6	#5	#6	#5
11'	#6	#5	#6	#5
12'	#6	#6	#7	#7

NOTE:
For General Notes and Miscellaneous Details see B-01.10.
For Headwall Quantities see B-05.10, B-05.20 and B-05.30.

NO.	DESCRIPTION OF REVISIONS	MADE BY	DATE
1			
2			
3			
4			

DESIGN
DRAWN
CHECKED

DESIGN APPROVED

APPROVED FOR DISTRIBUTION

ARIZONA
DEPARTMENT OF TRANSPORTATION
HIGHWAYS DIVISION
STANDARD DRAWINGS

INLET WINGS
CULVERT HEIGHT 8' to 12'
SKEW 25° to 45°

REVISION

STANDARD NO.
B-04.80

CADD FILENAME= 2FA
VIEW NAME=

INLET WINGS

Span	Hgt.	0°Skew				5°Skew				10°Skew				15°Skew				20°Skew			
		Conc. C.Y.		Steel lbs.		Conc. C.Y.		Steel lbs.		Conc. C.Y.		Steel lbs.		Conc. C.Y.		Steel lbs.		Conc. C.Y.		Steel lbs.	
		1 Bbl.	Δc	1 Bbl.	Δs	1 Bbl.	Δc	1 Bbl.	Δs	1 Bbl.	Δc	1 Bbl.	Δs	1 Bbl.	Δc	1 Bbl.	Δs	1 Bbl.	Δc	1 Bbl.	Δs
6'	3'	3.81	.86	276	80	3.66	.87	271	80	3.73	.88	281	81	3.81	.89	284	83	4.00	.92	302	85
	4'	5.18	.86	376	80	5.00	.87	357	80	5.07	.88	356	81	5.16	.89	368	83	5.38	.92	391	85
	5'	6.52	.86	452	80	6.59	.87	457	80	6.65	.88	468	81	6.75	.89	470	83	7.00	.92	487	85
	6'	8.26	.86	552	80	8.34	.87	570	80	8.28	.88	564	81	8.67	.89	570	83	8.80	.92	585	85
	7'	10.26	.86	774	80	10.18	.87	748	80	10.25	.88	763	81	10.52	.89	735	83	10.96	.92	764	85
8'	3'	4.11	1.13	318	105	3.95	1.14	311	106	4.02	1.15	322	107	4.11	1.17	332	109	4.31	1.21	352	112
	4'	5.47	1.13	397	105	5.29	1.14	380	106	5.37	1.15	381	107	5.47	1.17	400	109	5.69	1.21	423	112
	5'	6.81	1.13	477	105	6.88	1.14	482	106	6.95	1.15	493	107	7.06	1.17	499	109	7.31	1.21	520	112
	6'	8.56	1.13	604	105	8.64	1.14	620	106	8.58	1.15	617	107	8.98	1.17	633	109	9.12	1.21	649	112
	7'	10.55	1.13	791	105	10.48	1.14	773	106	10.55	1.15	788	107	10.83	1.17	767	109	11.28	1.21	798	112
	8'	15.95	1.13	892	105	15.73	1.14	909	106	16.04	1.15	922	107	16.18	1.17	935	109	16.76	1.21	948	112
10'	3'	4.41	1.40	358	130	4.25	1.41	352	131	4.33	1.43	362	132	4.42	1.45	365	135	4.63	1.49	388	139
	4'	5.77	1.40	440	130	5.59	1.41	422	131	5.68	1.43	424	132	5.78	1.45	437	135	6.01	1.49	462	139
	5'	7.11	1.40	521	130	7.18	1.41	526	131	7.26	1.43	539	132	7.37	1.45	538	135	7.64	1.49	560	139
	6'	8.86	1.40	651	130	8.94	1.41	667	131	8.88	1.43	664	132	9.29	1.45	675	135	9.44	1.49	691	139
	7'	10.86	1.40	840	130	10.78	1.41	822	131	10.86	1.43	837	132	11.14	1.45	811	135	11.60	1.49	843	139
	8'	16.25	1.40	943	130	16.04	1.41	961	131	16.35	1.43	974	132	16.50	1.45	981	135	17.10	1.49	996	139
	9'	19.48	1.40	1210	130	19.29	1.41	1182	131	19.36	1.43	1195	132	19.99	1.45	1225	135	20.60	1.49	1273	139
	10'	23.08	1.40	1412	130	22.84	1.41	1435	131	22.95	1.43	1431	132	23.30	1.45	1439	135	24.00	1.49	1497	139
12'	8'	16.59	1.69	972	156	16.36	1.69	991	157	16.71	1.71	1004	159	16.86	1.74	1007	162	17.48	1.79	1034	196
	9'	19.82	1.69	1240	156	19.63	1.69	1205	157	19.71	1.71	1226	159	20.35	1.74	1258	162	20.99	1.79	1312	196
	10'	23.42	1.69	1442	156	23.18	1.69	1465	157	23.24	1.71	1454	159	23.66	1.74	1473	162	24.38	1.79	1526	196
	11'	27.28	1.69	1828	156	27.16	1.69	1852	157	27.49	1.71	1865	159	28.02	1.74	1882	162	29.01	1.79	1938	196
	12'	32.13	1.69	2526	156	32.03	1.69	2498	157	32.41	1.71	2518	159	33.16	1.74	2480	162	34.22	1.79	2581	196

Span	Hgt.	25°Skew				30°Skew				35°Skew				40°Skew				45°Skew			
		Conc. C.Y.		Steel lbs.		Conc. C.Y.		Steel lbs.		Conc. C.Y.		Steel lbs.		Conc. C.Y.		Steel lbs.		Conc. C.Y.		Steel lbs.	
		1 Bbl.	Δc	1 Bbl.	Δs	1 Bbl.	Δc	1 Bbl.	Δs	1 Bbl.	Δc	1 Bbl.	Δs	1 Bbl.	Δc	1 Bbl.	Δs	1 Bbl.	Δc	1 Bbl.	Δs
6'	3'	4.11	.95	303	88	4.23	1.00	320	93	4.44	1.05	332	98	4.71	1.13	341	105	4.97	1.22	369	113
	4'	5.61	.95	405	88	5.76	1.00	417	93	5.94	1.05	423	98	6.32	1.13	449	105	6.80	1.22	484	113
	5'	7.14	.95	503	88	7.39	1.00	523	93	7.83	1.05	550	98	8.20	1.13	574	105	8.75	1.22	597	113
	6'	9.08	.95	608	88	9.44	1.00	637	93	9.80	1.05	654	98	10.30	1.13	681	105	11.07	1.22	747	113
	7'	11.28	.95	790	88	11.67	1.00	821	93	12.11	1.05	857	98	12.88	1.13	900	105	13.61	1.22	956	113
8'	3'	4.43	1.25	356	116	4.57	1.31	367	121	4.80	1.38	386	128	5.09	1.48	398	137	5.38	1.60	429	149
	4'	5.93	1.25	438	116	6.10	1.31	444	121	6.30	1.38	458	128	6.70	1.48	485	137	7.22	1.60	523	149
	5'	7.47	1.25	532	116	7.73	1.31	551	121	8.19	1.38	586	128	8.59	1.48	611	137	9.17	1.60	635	149
	6'	9.41	1.25	674	116	9.78	1.31	698	121	10.16	1.38	723	128	10.68	1.48	753	137	11.49	1.60	823	149
	7'	11.61	1.25	824	116	12.02	1.31	849	121	12.48	1.38	893	128	13.27	1.48	937	137	14.03	1.60	995	149
	8'	17.40	1.25	1016	116	17.75	1.31	1037	121	18.60	1.38	1086	128	19.50	1.48	1150	137	21.19	1.60	1247	149
10'	3'	4.76	1.55	395	144	4.92	1.62	412	150	5.16	1.71	456	188	5.48	1.83	476	201	5.80	1.99	510	217
	4'	6.27	1.55	480	144	6.45	1.62	492	150	6.67	1.71	531	188	7.10	1.83	569	201	7.64	1.99	607	217
	5'	7.81	1.55	576	144	8.08	1.62	593	150	8.56	1.71	659	188	8.98	1.83	697	201	9.59	1.99	722	217
	6'	9.75	1.55	720	144	10.13	1.62	750	150	10.53	1.71	800	188	11.08	1.83	842	201	11.91	1.99	913	217
	7'	11.95	1.55	866	144	12.37	1.62	899	150	12.85	1.71	973	188	13.67	1.83	1029	201	14.46	1.99	1088	217
	8'	17.76	1.55	1067	144	18.12	1.62	1094	150	18.99	1.71	1169	188	19.92	1.83	1240	201	21.64	1.99	1338	217
	9'	21.30	1.55	1334	144	21.76	1.62	1371	150	22.69	1.71	1429	188	23.99	1.83	1531	201	25.67	1.99	1633	217
	10'	24.76	1.55	1641	144	25.72	1.62	1714	150	26.76	1.71	1806	188	28.34	1.83	1961	201	30.18	1.99	2070	217
12'	8'	18.15	1.86	1104	204	18.52	1.95	1130	213	19.42	2.06	1179	265	20.37	2.20	1236	334	22.13	2.38	1348	361
	9'	21.70	1.86	1362	204	22.16	1.95	1407	213	23.12	2.06	1440	265	24.45	2.20	1537	334	26.16	2.38	1643	361
	10'	25.15	1.86	1678	204	26.13	1.95	1751	213	27.18	2.06	1817	265	28.79	2.20	1968	334	30.67	2.38	2080	361
	11'	29.83	1.86	2111	204	30.66	1.95	2193	213	32.29	2.06	2334	265	34.32	2.20	2460	334	36.40	2.38	2678	361
	12'	35.14	1.86	2714	204	36.25	1.95	2828	213	37.74	2.06	2988	265	39.97	2.20	3103	334	43.12	2.38	3421	361

OUTLET WINGS

Span	Hgt.	0°Skew				5°Skew				10°Skew				15°Skew				20°Skew			
		Conc. C.Y.		Steel lbs.		Conc. C.Y.		Steel lbs.		Conc. C.Y.		Steel lbs.		Conc. C.Y.		Steel lbs.		Conc. C.Y.		Steel lbs.	
		1 Bbl.	Δc	1 Bbl.	Δs	1 Bbl.	Δc	1 Bbl.	Δs	1 Bbl.	Δc	1 Bbl.	Δs	1 Bbl.	Δc	1 Bbl.	Δs	1 Bbl.	Δc	1 Bbl.	Δs
6'	3'	5.98	1.55	467	135	5.98	1.56	468	135	6.19	1.58	475	137	6.07	1.61	464	140	6.31	1.65	485	143
	4'	7.72	1.55	574	135	7.71	1.56	574	135	7.96	1.58	592	137	8.00	1.61	600	140	8.28	1.65	619	143
	5'	9.61	1.55	707	135	9.80	1.56	713	135	9.90	1.58	716	137	9.94	1.61	724	140	10.26	1.65	734	143
	6'	11.75	1.55	807	135	11.94	1.56	826	135	12.23	1.58	852	137	12.37	1.61	871	140	12.66	1.65	882	143
	7'	14.08	1.55	976	135	14.29	1.56	981	135	14.63	1.58	1050	137	14.77	1.61	1040	140	15.17	1.65	1077	143
8'	3'	6.50	2.02	525	177	6.51	2.03	525	178	6.73	2.05	534	180	6.61	2.09	536	184	6.87	2.15	559	189
	4'	8.25	2.02	613	177	8.24	2.03	613	178	8.50	2.05	632	180	8.55	2.09	654	184	8.84	2.15	674	189
	5'	10.14	2.02	746	177	10.34	2.03	753	178	10.44	2.05	756	180	10.49	2.09	779	184	10.82	2.15	789	189
	6'	12.28	2.02	877	177	12.48	2.03	896	178	12.78	2.05	924	180	12.93	2.09	958	184	13.23	2.15	970	189
	7'	14.62	2.02	1016	177	14.84	2.03	1021	178	15.18	2.05	1091	180	15.33	2.09	1095	184	15.74	2.15	1126	189
	8'	20.30	2.02	1278	177	20.18	2.03	1256	178	20.48	2.05	1270	180	20.72	2.09	1316	184	21.49	2.15	1360	189
10'	3'	7.06	2.51	589	220	7.06	2.52	589	221	7.29	2.55	598	223	7.19	2.59	586	228	7.46	2.67	610	235
	4'	8.80	2.51	679	220	8.80	2.52	679	221	9.06	2.55	696	223	9.13	2.59	707	228	9.43	2.67	728	235
	5'	10.70	2.51	814	220	10.90	2.52	821	221	11.01	2.55	825	223	11.07	2.59	834	228	11.42	2.67	845	235
	6'	12.84	2.51	947	220	13.04	2.52	967	221	13.35	2.55	996	223	13.51	2.59	1016	228	13.82	2.67	1029	235
	7'	15.18	2.51	1088	220	15.40	2.52	1094	221	15.75	2.55	1165	223	15.91	2.59	1155	228	16.34	2.67	1187	235
	8'	20.88	2.51	1354	220	20.77	2.52	1332	221	21.08	2.55	1346	223	21.32	2.59	1378	228	22.11	2.67	1424	235
	9'	24.31	2.51	1530	220	24.44	2.52	1560	221	24.89	2.55	1567	223	25.17	2.59	1584	228	26.06	2.67	1632	235
	10'	27.99	2.51	1830	220	28.14	2.52	1827	221	28.65	2.55	1860	223	28.94	2.59	1872	228	29.90	2.67	1935	235
12'	8'	21.47	2.98	1385	264	21.36	2.99	1377	265	21.68	3.02	1386	268	21.93	3.08	1427	274	22.74	3.17	1486	311
	9'	24.90	2.98	1576	264	25.04	2.99	1606	265	25.49	3.02	1614	268	25.78	3.08	1634	274	26.68	3.17	1694	311
	10'	28.58	2.98	1876	264	28.74	2.99	1873	265	29.25	3.02	1898	268	29.55	3.08	1922	274	30.52	3.17	1998	311
	11'	32.86	2.98	2175	264	33.17	2.99	2235	265	33.71	3.02	2243	268	34.51	3.08	2285	274	35.56	3.17	2344	311
	12'	37.72	2.98	2866	264	38.11	2.99	2849	265	39.17	3.02	2890	268	39.56	3.08	2968	274	40.87	3.17	3045	311

Span	Hgt.	25°Skew				30°Skew				35°Skew				40°Skew				45°Skew			
		Conc. C.Y.		Steel lbs.		Conc. C.Y.		Steel lbs.		Conc. C.Y.		Steel lbs.		Conc. C.Y.		Steel lbs.		Conc. C.Y.		Steel lbs.	
		1 Bbl.	Δc	1 Bbl.	Δs	1 Bbl.	Δc	1 Bbl.	Δs	1 Bbl.	Δc	1 Bbl.	Δs	1 Bbl.	Δc	1 Bbl.	Δs	1 Bbl.	Δc	1 Bbl.	Δs
6'	3'	6.58	1.71	495	149	6.73	1.79	520	156	7.05	1.90	538	165	7.43	2.03	555	177	7.82	2.20	598	191
	4'	8.56	1.71	630	149	8.74	1.79	651	156	8.96	1.90	658	165	9.53	2.03	696	177	10.21	2.20	751	191
	5'	10.44	1.71	752	149	10.78	1.79	786	156	11.40	1.90	824	165	11.89	2.03	855	177	12.63	2.20	897	191
	6'	12.86	1.71	890	149	13.31	1.79	933	156	13.79	1.90	956	165	14.47	2.03	995	177	15.50	2.20	1086	191
	7'	15.54	1.71	1107	149	16.02	1.79	1151	156	16.58	1.90	1192	165	17.60	2.03	1252	177	18.52	2.20	1328	191
8'	3'	7.16	2.23	570	196	7.34	2.34	582	204	7.68	2.47	616	216	8.11	2.64	636	231	8.55	2.86	683	251
	4'	9.14	2.23	686	196	9.35	2.34	694	204	9.60	2.47	717	216	10.21	2.64	757	231	10.94	2.86	815	251
	5'	11.02	2.23	804	196	11.39	2.34	829	204	12.05	2.47	883	216	12.58	2.64	916	231	13.38	2.86	961	251
	6'	13.45	2.23	979	196	13.93	2.34	1010	204	14.43	2.47	1049	216	15.16	2.64	1092	231	16.25	2.86	1187	251
	7'	16.13	2.23	1163	196	16.65	2.34	1195	204	17.23	2.47	1253	216	18.30	2.64	1314	231	19.27	2.86	1393	251
	8'	22.12	2.23	1389	196	22.50	2.34	1412	204	23.53	2.47	1479	216	24.62	2.64	1556	231	26.70	2.86	1688	251
10'	3'	7.77	2.77	625	243	7.97	2.89	851	254	8.36	3.06	702	298	8.83	3.27	739	318	9.33	3.54	781	344
	4'	9.76	2.77	744	243	9.99	2.89	765	254	10.27	3.06	806	298	10.93	3.27	865	318	11.72	3.54	917	344
	5'	11.64	2.77	863	243	12.04	2.89	895	254	12.72	3.06	973	298	13.30	3.27	1027	318	14.16	3.54	1066	344
	6'	14.07	2.77	1041	243	14.57	2.89	1085	254	15.11	3.06	1143	298	15.88	3.27	1205	318	17.04	3.54	1295	344
	7'	16.75	2.77	1221	243	17.30	2.89	1268	254	17.91	3.06	1350	298	19.03	3.27	1430	318	20.06	3.54	1503	344
	8'	22.76	2.77	1456	243	23.17	2.89	1492	254	24.23	3.06	1579	298	25.37	3.27	1670	318	27.51	3.54	1797	344
	9'	26.75	2.77	1756	243	27.25	2.89	1801	254	28.38	3.06	1872	298	29.95	3.27	2000	318	31.98	3.54	2125	344
	10'	30.52	2.77	2086	243	31.65	2.89	2178	254	32.88	3.06	2283	298	34.73	3.27	2463	318	36.92	3.54	2595	344
12'	8'	23.40	3.29	1516	323	23.83	3.44	1545	337	24.93	3.64	1614	397	26.11	3.89	1684	475	28.32	4.21	1833	513
	9'	27.40	3.29	1808	323	27.92	3.44	1855	337	29.08	3.64	1908	397	30.70	3.89	2024	475	32.79	4.21	2165	513
	10'	31.16	3.29	2148	323	32.32	3.44	2232	337	33.58	3.64	2319	397	35.48	3.89	2488	475	37.73	4.21	2632	513
	11'	36.27	3.29	2614	323	37.22	3.44	2703	337	39.12	3.64	2869	397	41.50	3.89	3018	475	43.95	4.21	3268	513
	12'	42.02	3.29	3250	323	43.24	3.44	3372	337	44.93	3.64	3552	397	47.51	3.89	3690	475	51.16	4.21	4049	513

NOTES :

All quantities are for headwalls of barrels shown in Table No. I (0-10' Fill).

Quantities are shown for single barrel culvert only.

Multi-barrel culvert headwall quantities are obtained by adding, for each additional barrel, Δs and Δc to the inlet and outlet quantities.

NOTATIONS :

Δ c = Inlet or outlet concrete quantity per additional barrel.

Δ s = Inlet or outlet steel quantity per additional barrel.

NO	DESCRIPTION OF REVISIONS	MADE BY	DATE
1	Revised Quantities	C.H.	6-88
2			
3			
4			

DESIGN / DRAWN: T.J.M.C. / CHECKED

Registered Professional Engineer (Civil) Certificate No. 9910 F. DANIEL DAVIS Date Signed 9-1-88 Arizona U.S.A.

DESIGN APPROVED: F.D. Davis

APPROVED FOR DISTRIBUTION: T.A. Bryant, II.

ARIZONA
DEPARTMENT OF TRANSPORTATION
HIGHWAYS DIVISION
STANDARD DRAWINGS

HEADWALL QUANTITIES
2 : 1 SLOPE

REVISION 7-88

STANDARD NO. B-05.10

CADD FILENAME= ZFA B0510
VIEW NAME= B0510

INLET WINGS

Span	Hgt.	0° Skew				5° Skew				10° Skew				15° Skew			
		Conc. C.Y.		Steel lbs.		Conc. C.Y.		Steel lbs.		Conc. C.Y.		Steel lbs.		Conc. C.Y.		Steel lbs.	
		1 Bbl.	Δc	1 Bbl.	Δs	1 Bbl.	Δc	1 Bbl.	Δs	1 Bbl.	Δc	1 Bbl.	Δs	1 Bbl.	Δc	1 Bbl.	Δs
6'	3'	4.80	.86	342	80	4.84	.87	351	80	4.92	.88	357	81	5.11	.89	378	83
	4'	6.38	.86	455	80	6.68	.87	475	80	6.77	.88	477	81	7.11	.89	512	83
	5'	8.44	.86	593	80	8.64	.87	613	80	8.88	.88	620	81	9.41	.89	668	83
	6'	10.92	.86	762	80	11.11	.87	774	80	11.47	.88	792	81	11.89	.89	814	83
	7'	13.81	.86	1048	80	14.00	.87	1070	80	14.39	.88	1088	81	14.96	.89	1060	83
8'	3'	5.09	1.13	388	105	5.14	1.14	399	106	5.22	1.15	405	107	5.42	1.17	435	109
	4'	6.68	1.13	480	105	6.98	1.14	500	106	7.08	1.15	503	107	7.42	1.17	542	109
	5'	8.74	1.13	618	105	8.94	1.14	638	106	9.19	1.15	646	107	9.73	1.17	698	109
	6'	11.22	1.13	824	105	11.41	1.14	835	106	11.78	1.15	858	107	12.21	1.17	889	109
	7'	14.11	1.13	1073	105	14.31	1.14	1095	106	14.71	1.15	1114	107	15.28	1.17	1093	109
	8'	20.89	1.13	1168	105	21.54	1.14	1231	106	22.01	1.15	1258	107	23.01	1.17	1332	109
10'	3'	5.40	1.40	432	130	5.45	1.41	443	131	5.54	1.43	450	132	5.74	1.45	474	135
	4'	6.99	1.40	526	130	7.29	1.41	547	131	7.40	1.43	550	132	7.74	1.45	585	135
	5'	9.05	1.40	667	130	9.26	1.41	688	131	9.51	1.43	696	132	10.06	1.45	743	135
	6'	11.53	1.40	876	130	11.73	1.41	887	131	12.10	1.43	912	132	12.55	1.45	937	135
	7'	14.43	1.40	1128	130	14.63	1.41	1151	131	15.04	1.43	1171	132	15.62	1.45	1139	135
	8'	21.23	1.40	1225	130	21.88	1.41	1290	131	22.36	1.43	1318	132	23.37	1.45	1387	135
	9'	25.65	1.40	1580	130	26.36	1.41	1655	131	26.92	1.43	1687	132	27.91	1.45	1756	135
	10'	30.59	1.40	1858	130	31.03	1.41	1892	131	31.90	1.43	1948	132	33.29	1.45	2040	135
12'	8'	21.60	1.69	1254	156	22.26	1.69	1321	157	22.75	1.71	1349	159	23.77	1.74	1413	162
	9'	26.06	1.69	1611	156	26.74	1.69	1687	157	27.31	1.71	1710	159	28.31	1.74	1790	162
	10'	30.96	1.69	1889	156	31.41	1.69	1923	157	32.30	1.71	1980	159	33.70	1.74	2065	162
	11'	36.81	1.69	2573	156	37.27	1.69	2625	157	38.25	1.71	2677	159	39.97	1.74	2777	162
	12'	43.37	1.69	3310	156	43.91	1.69	3374	157	45.07	1.71	3486	159	46.79	1.74	3583	162

Span	Hgt.	20° Skew				25° Skew				30° Skew				35° Skew			
		Conc. C.Y.		Steel lbs.		Conc. C.Y.		Steel lbs.		Conc. C.Y.		Steel lbs.		Conc. C.Y.		Steel lbs.	
		1 Bbl.	Δc	1 Bbl.	Δs	1 Bbl.	Δc	1 Bbl.	Δs	1 Bbl.	Δc	1 Bbl.	Δs	1 Bbl.	Δc	1 Bbl.	Δs
6'	3'	5.40	.92	400	85	5.73	.95	420	88	5.82	1.00	436	93	5.82	1.05	431	98
	4'	7.46	.92	527	85	7.84	.95	560	88	8.06	1.00	590	93	8.06	1.05	580	98
	5'	9.92	.92	706	85	10.47	.95	744	88	10.59	1.00	756	93	10.74	1.05	766	98
	6'	12.76	.92	874	85	13.35	.95	915	88	13.51	1.00	931	93	13.69	1.05	949	98
	7'	15.79	.92	1121	85	16.62	.95	1181	88	16.81	1.00	1213	93	16.86	1.05	1217	98
8'	3'	5.72	1.21	460	112	6.06	1.25	482	116	6.17	1.31	492	121	6.18	1.38	495	128
	4'	7.79	1.21	560	112	8.18	1.25	590	116	8.41	1.31	616	121	8.43	1.38	616	128
	5'	10.24	1.21	739	112	10.81	1.25	778	116	10.95	1.31	784	121	11.12	1.38	802	128
	6'	13.09	1.21	954	112	13.69	1.25	998	116	13.86	1.31	1008	121	14.07	1.38	1034	128
	7'	16.12	1.21	1155	112	16.97	1.25	1206	116	17.18	1.31	1236	121	17.24	1.38	1253	128
	8'	24.55	1.21	1404	112	25.70	1.25	1498	116	25.97	1.31	1539	121	26.47	1.38	1551	128
10'	3'	6.05	1.49	501	139	6.41	1.55	527	144	6.53	1.62	543	150	6.56	1.71	569	188
	4'	8.12	1.49	604	139	8.53	1.55	638	144	8.78	1.62	666	150	8.82	1.71	694	188
	5'	10.58	1.49	786	139	11.17	1.55	830	144	11.32	1.62	842	150	11.51	1.71	884	188
	6'	13.44	1.49	1005	139	14.06	1.55	1054	144	14.24	1.62	1069	150	14.46	1.71	1120	188
	7'	16.47	1.49	1209	139	17.33	1.55	1265	144	17.56	1.62	1301	150	17.64	1.71	1343	188
	8'	24.93	1.49	1462	139	26.09	1.55	1561	144	26.38	1.62	1607	150	26.89	1.71	1644	188
	9'	29.75	1.49	1849	139	31.21	1.55	1905	144	31.57	1.62	1965	150	32.18	1.71	2007	188
	10'	34.99	1.49	2151	139	36.88	1.55	2292	144	37.43	1.62	2366	150	37.94	1.71	2442	188
12'	8'	25.35	1.79	1502	196	26.54	1.86	1599	204	26.84	1.95	1645	213	27.37	2.06	1656	265
	9'	30.18	1.79	1889	196	31.66	1.86	1944	204	32.04	1.95	2003	213	32.67	2.06	2019	265
	10'	35.43	1.79	2192	196	37.34	1.86	2331	204	37.91	1.95	2389	213	38.44	2.06	2456	265
	11'	42.14	1.79	2894	196	44.33	1.86	3038	204	44.50	1.95	3096	213	45.38	2.06	3194	265
	12'	49.68	1.79	3777	196	51.55	1.86	3917	204	52.28	1.95	3987	213	53.38	2.06	4072	265

Span	Hgt.	40° Skew				45° Skew			
		Conc. C.Y.		Steel lbs.		Conc. C.Y.		Steel lbs.	
		1 Bbl.	Δc	1 Bbl.	Δs	1 Bbl.	Δc	1 Bbl.	Δs
6'	3'	6.07	1.13	440	105	6.44	1.22	472	113
	4'	8.34	1.13	595	105	8.77	1.22	635	113
	5'	10.93	1.13	783	105	11.44	1.22	808	113
	6'	14.06	1.13	964	105	14.79	1.22	1014	113
	7'	17.52	1.13	1257	105	18.49	1.22	1318	113
8'	3'	6.46	1.48	506	137	6.87	1.60	541	149
	4'	8.73	1.48	632	137	9.20	1.60	674	149
	5'	11.33	1.48	814	137	11.87	1.60	847	149
	6'	14.47	1.48	1051	137	15.22	1.60	1104	149
	7'	17.93	1.48	1295	137	18.93	1.60	1358	149
	8'	27.09	1.48	1618	137	28.50	1.60	1699	149
10'	3'	6.86	1.83	591	201	7.30	1.99	627	217
	4'	9.14	1.83	721	201	9.64	1.99	765	217
	5'	11.74	1.83	907	201	12.32	1.99	939	217
	6'	14.88	1.83	1148	201	15.67	1.99	1202	217
	7'	18.35	1.83	1395	201	19.38	1.99	1459	217
	8'	27.54	1.83	1717	201	28.98	1.99	1804	217
	9'	33.02	1.83	2074	201	34.98	1.99	2212	217
	10'	39.43	1.83	2553	201	41.33	1.99	2670	217
12'	8'	28.04	2.20	1712	334	29.53	2.38	1816	361
	9'	33.53	2.20	2082	334	35.53	2.38	2210	361
	10'	39.95	2.20	2562	334	41.89	2.38	2682	361
	11'	47.09	2.20	3336	334	49.43	2.38	3542	361
	12'	55.28	2.20	4181	334	58.56	2.38	4472	361

OUTLET WINGS

Span	Hgt.	0° Skew				5° Skew				10° Skew				15° Skew			
		Conc. C.Y.		Steel lbs.		Conc. C.Y.		Steel lbs.		Conc. C.Y.		Steel lbs.		Conc. C.Y.		Steel lbs.	
		1 Bbl.	Δc	1 Bbl.	Δs	1 Bbl.	Δc	1 Bbl.	Δs	1 Bbl.	Δc	1 Bbl.	Δs	1 Bbl.	Δc	1 Bbl.	Δs
6'	3'	8.58	1.55	639	135	8.74	1.56	657	135	8.75	1.58	658	137	8.96	1.61	667	140
	4'	11.40	1.55	837	135	11.58	1.56	843	135	11.60	1.58	845	137	11.65	1.61	853	140
	5'	14.49	1.55	1043	135	14.71	1.56	1062	135	14.74	1.58	1060	137	14.78	1.61	1062	140
	6'	17.97	1.55	1241	135	17.99	1.56	1235	135	18.26	1.58	1278	137	18.51	1.61	1281	140
	7'	21.70	1.55	1493	135	21.82	1.56	1512	135	22.09	1.58	1584	137	22.38	1.61	1611	140
8'	3'	9.12	2.02	706	177	9.29	2.03	725	178	9.31	2.05	726	180	9.53	2.09	751	184
	4'	11.96	2.02	877	177	12.14	2.03	883	178	12.17	2.05	885	180	12.23	2.09	908	184
	5'	15.06	2.02	1083	177	15.28	2.03	1102	178	15.31	2.05	1100	180	15.36	2.09	1117	184
	6'	18.55	2.02	1316	177	18.57	2.03	1310	178	18.84	2.05	1360	180	19.11	2.09	1385	184
	7'	22.28	2.02	1534	177	22.41	2.03	1553	178	22.68	2.05	1625	180	22.99	2.09	1670	184
	8'	30.92	2.02	1924	177	31.11	2.03	1901	178	31.48	2.05	1930	180	31.62	2.09	1958	184
10'	3'	9.69	2.51	775	220	9.86	2.52	794	221	9.89	2.55	794	223	10.12	2.59	805	228
	4'	12.54	2.51	949	220	12.72	2.52	956	221	12.76	2.55	958	223	12.83	2.59	967	228
	5'	15.65	2.51	1160	220	15.87	2.52	1179	221	15.91	2.55	1177	223	15.97	2.59	1181	228
	6'	19.14	2.51	1396	220	19.17	2.52	1389	221	19.44	2.55	1434	223	19.72	2.59	1452	228
	7'	22.88	2.51	1617	220	23.01	2.52	1636	221	23.29	2.55	1710	223	23.61	2.59	1738	228
	8'	31.56	2.51	2011	220	31.75	2.52	1988	221	32.13	2.55	2018	223	32.27	2.59	2032	228
	9'	37.18	2.51	2325	220	37.38	2.52	2357	221	37.48	2.55	2342	223	38.21	2.59	2395	228
	10'	43.26	2.51	2781	220	43.54	2.52	2767	221	43.61	2.55	2801	223	44.42	2.59	2844	228
12'	8'	32.22	2.98	2038	264	32.41	2.99	2025	265	32.79	3.02	2056	268	32.95	3.08	2073	274
	9'	37.85	2.98	2373	264	38.05	2.99	2405	265	38.15	3.02	2390	268	38.90	3.08	2446	274
	10'	43.94	2.98	2829	264	44.21	2.99	2815	265	44.29	3.02	2850	268	45.12	3.08	2896	274
	11'	50.88	2.98	3330	264	51.13	2.99	3362	265	51.25	3.02	3360	268	52.34	3.08	3422	274
	12'	58.80	2.98	4507	264	58.86	2.99	4482	265	59.56	3.02	4558	268	60.40	3.08	4593	274

Span	Hgt.	20° Skew				25° Skew				30° Skew				35° Skew			
		Conc. C.Y.		Steel lbs.		Conc. C.Y.		Steel lbs.		Conc. C.Y.		Steel lbs.		Conc. C.Y.		Steel lbs.	
		1 Bbl.	Δc	1 Bbl.	Δs	1 Bbl.	Δc	1 Bbl.	Δs	1 Bbl.	Δc	1 Bbl.	Δs	1 Bbl.	Δc	1 Bbl.	Δs
6'	3'	9.17	1.65	685	143	9.16	1.71	679	149	9.29	1.79	703	156	9.25	1.90	695	165
	4'	11.97	1.65	867	143	11.89	1.71	862	149	12.21	1.79	905	156	12.19	1.90	892	165
	5'	15.34	1.65	1098	143	15.28	1.71	1099	149	15.43	1.79	1120	156	15.62	1.90	1131	165
	6'	18.92	1.65	1314	143	18.85	1.71	1317	149	19.04	1.79	1342	156	19.26	1.90	1362	165
	7'	23.06	1.65	1656	143	22.81	1.71	1631	149	23.03	1.79	1672	156	23.05	1.90	1673	165
8'	3'	9.76	2.15	770	189	9.76	2.23	764	196	9.91	2.34	776	204	9.91	2.47	783	216
	4'	12.56	2.15	919	189	12.50	2.23	915	196	12.85	2.34	947	204	12.85	2.47	952	216
	5'	15.94	2.15	1154	189	15.90	2.23	1155	196	16.08	2.34	1164	204	16.30	2.47	1190	216
	6'	19.53	2.15	1419	189	19.48	2.23	1423	196	19.69	2.34	1435	204	19.94	2.47	1470	216
	7'	23.68	2.15	1712	189	23.44	2.23	1679	196	23.69	2.34	1711	204	23.74	2.47	1733	216
	8'	32.45	2.15	1996	189	32.50	2.23	2019	196	32.81	2.34	2062	204	33.35	2.47	2084	216
10'	3'	10.37	2.67	825	235	10.40	2.77	824	243	10.57	2.89	849	254	10.60	3.06	874	298
	4'	13.73	2.67	980	235	13.14	2.77	978	243	13.51	2.89	1021	254	13.55	3.06	1047	298
	5'	16.57	2.67	1218	235	16.54	2.77	1223	243	16.75	2.89	1244	254	17.00	3.06	1289	298
	6'	20.16	2.67	1488	235	20.13	2.77	1495	243	20.36	2.89	1520	254	20.65	3.06	1573	298
	7'	24.32	2.67	1784	235	24.10	2.77	1754	243	24.38	2.89	1799	254	24.46	3.06	1839	298
	8'	33.13	2.67	2072	235	33.19	2.77	2097	243	33.53	2.89	2154	254	34.10	3.06	2193	298
	9'	39.20	2.67	2454	235	38.96	2.77	2490	243	39.37	2.89	2559	254	40.04	3.06	2604	298
	10'	45.49	2.67	2910	235	45.27	2.77	2924	243	45.87	2.89	3008	254	46.44	3.06	3087	298
12'	8'	33.82	3.17	2126	311	33.90	3.29	2159	323	34.26	3.44	2207	337	34.87	3.64	2230	397
	9'	39.90	3.17	2505	311	39.68	3.29	2552	323	40.11	3.44	2614	337	40.81	3.64	2641	397
	10'	46.20	3.17	2975	311	46.00	3.29	2987	323	46.62	3.44	3048	337	47.22	3.64	3125	397
	11'	53.70	3.17	3536	311	53.70	3.29	3747	323	53.85	3.44	3803	337	54.81	3.64	3911	397
	12'	61.49	3.17	4699	311	61.50	3.29	4669	323	62.28	3.44	4742	337	63.44	3.64	4837	397

Span	Hgt.	40° Skew				45° Skew			
		Conc. C.Y.		Steel lbs.		Conc. C.Y.		Steel lbs.	
		1 Bbl.	Δc	1 Bbl.	Δs	1 Bbl.	Δc	1 Bbl.	Δs
6'	3'	9.62	2.03	711	177	10.19	2.20	763	191
	4'	12.58	2.03	714	177	13.21	2.20	874	191
	5'	15.86	2.03	1150	177	16.57	2.20	1195	191
	6'	19.75	2.03	1584	177	20.67	2.20	1453	191
	7'	23.90	2.03	1725	177	25.06	2.20	1805	191
8'	3'	10.32	2.64	801	231	10.95	2.86	857	251
	4'	13.29	2.64	975	231	13.98	2.86	1038	251
	5'	16.58	2.64	1205	231	17.34	2.86	1259	251
	6'	20.48	2.64	1496	231	21.45	2.86	1569	251
	7'	24.64	2.64	1787	231	25.85	2.86	1870	251
	8'	34.09	2.64	2158	231	35.76	2.86	2264	251
10'	3'	11.05	3.27	911	318	11.74	3.54	961	344
	4'	14.03	3.27	1089	318	14.77	3.54	1147	344
	5'	17.32	3.27	1323	318	18.15	3.54	1369	344
	6'	21.23	3.27	1617	318	22.27	3.54	1684	344
	7'	25.40	3.27	1912	318	26.67	3.54	1989	344
	8'	34.89	3.27	2281	318	36.62	3.54	2387	344
	9'	41.01	3.27	2687	318	43.32	3.54	2848	344
	10'	48.13	3.27	3218	318	50.32	3.54	3354	344
12'	8'	35.70	3.89	2294	475	37.49	4.21	2424	513
	9'	41.83	3.89	2712	475	44.21	4.21	2871	513
	10'	48.96	3.89	3245	475	51.21	4.21	3392	513
	11'	56.73	3.89	4067	475	59.38	4.21	4300	513
	12'	65.55	3.89	4960	475	69.28	4.21	5287	513

NOTES :

All quantities are for headwalls of barrels shown in Table No. I (0-10' Fill).
Quantities are shown for single barrel culvert only.
Multi-barrel culvert headwall quantities are obtained by adding, for each additional barrel, Δs and Δc to the inlet and outlet quantities.

NOTATIONS :

Δc = inlet or outlet concrete quantity per additional barrel.

Δs = inlet or outlet steel quantity per additional barrel.

NO	DESCRIPTION OF REVISIONS	MADE BY	DATE
1	Revised Quantities	C.H.	6-88
2			
3			
4			

DESIGN T.J.C. S.E.A.
DRAWN
CHECKED

CADD FILENAME= ZFA *51,4*B0520
VIEW NAME= B0520

Registered Professional Engineer (Civil) CERTIFICATE NO. 9910 F. DANIEL DAVIS Expires 6-30-89 Arizona U.S.A.

DESIGN APPROVED F. D. Davis

APPROVED FOR DISTRIBUTION T. A. Bryant, Jr.

ARIZONA
DEPARTMENT OF TRANSPORTATION
HIGHWAYS DIVISION
STANDARD DRAWINGS

HEADWALL QUANTITIES
4:1 SLOPE

REVISION 7-88

STANDARD NO. B-05.20

INLET WINGS

Span	Hgt.	0° Skew				5° Skew				10° Skew				15° Skew			
		Conc. C.Y.		Steel lbs.		Conc. C.Y.		Steel lbs.		Conc. C.Y.		Steel lbs.		Conc. C.Y.		Steel lbs.	
		1 Bbl.	△c	1 Bbl.	△s	1 Bbl.	△c	1 Bbl.	△s	1 Bbl.	△c	1 Bbl.	△s	1 Bbl.	△c	1 Bbl.	△s
6'	3'	5.07	.86	352	80	5.35	.87	383	80	5.55	.88	397	81	5.84	.89	422	83
	4'	7.25	.86	507	80	7.32	.87	518	80	7.68	.88	550	81	8.30	.89	591	83
	5'	9.56	.86	657	80	9.91	.87	696	80	10.25	.88	720	81	10.94	.89	777	83
	6'	12.32	.86	837	80	12.73	.87	870	80	13.46	.88	934	81	14.27	.89	973	83
	7'	15.47	.86	1131	80	16.08	.87	1198	80	16.86	.88	1252	81	17.80	.89	1233	83
8'	3'	5.37	1.13	403	105	5.65	1.14	439	106	5.86	1.15	455	107	6.16	1.17	483	109
	4'	7.56	1.13	532	105	7.63	1.14	543	106	7.99	1.15	575	107	8.62	1.17	624	109
	5'	9.87	1.13	682	105	10.22	1.14	722	106	10.57	1.15	746	107	11.26	1.17	810	109
	6'	12.63	1.13	904	105	13.04	1.14	939	106	13.78	1.15	1006	107	14.59	1.17	1057	109
	7'	15.78	1.13	1157	105	16.40	1.14	1224	106	17.18	1.15	1278	107	18.13	1.17	1261	109
	8'	24.25	1.13	1378	105	25.03	1.14	1407	106	26.12	1.15	1482	107	27.42	1.17	1562	109
10'	3'	5.68	1.40	460	130	5.97	1.41	485	131	6.18	1.43	501	132	6.49	1.45	524	135
	4'	7.87	1.40	580	130	7.94	1.41	592	131	8.31	1.43	625	132	8.95	1.45	669	135
	5'	10.18	1.40	733	130	10.54	1.41	774	131	10.89	1.43	799	132	11.60	1.45	860	135
	6'	12.95	1.40	958	130	13.36	1.41	994	131	14.11	1.43	1060	132	14.94	1.45	1110	135
	7'	16.11	1.40	1214	130	16.72	1.41	1283	131	17.52	1.43	1338	132	18.47	1.45	1317	135
	8'	24.59	1.40	1439	130	25.38	1.41	1465	131	26.48	1.43	1546	132	27.80	1.45	1622	135
12'	8'	24.98	1.69	1462	156	25.78	1.69	1496	157	26.89	1.71	1577	159	28.22	1.74	1657	162

Span	Hgt.	20° Skew				25° Skew				30° Skew				35° Skew			
		Conc. C.Y.		Steel lbs.		Conc. C.Y.		Steel lbs.		Conc. C.Y.		Steel lbs.		Conc. C.Y.		Steel lbs.	
		1 Bbl.	△c	1 Bbl.	△s	1 Bbl.	△c	1 Bbl.	△s	1 Bbl.	△c	1 Bbl.	△s	1 Bbl.	△c	1 Bbl.	△s
6'	3'	6.38	.92	466	85	6.72	.95	486	88	6.70	1.00	492	93	6.81	1.05	500	98
	4'	8.91	.92	642	85	9.42	.95	678	88	9.53	1.00	690	93	9.53	1.05	681	98
	5'	11.78	.92	834	85	12.49	.95	882	88	12.47	1.00	887	93	12.62	1.05	899	98
	6'	15.28	.92	1039	85	16.17	.95	1100	88	16.01	1.00	1101	93	16.10	1.05	1114	98
	7'	19.28	.92	1344	85	20.24	.95	1419	88	20.25	1.00	1425	93	20.57	1.05	1447	98
8'	3'	6.70	1.21	531	112	7.06	1.25	554	116	7.05	1.31	553	121	7.18	1.38	570	128
	4'	9.24	1.21	676	112	9.76	1.25	712	116	9.89	1.31	718	121	9.90	1.38	717	128
	5'	12.12	1.21	864	112	12.84	1.25	913	116	12.83	1.31	916	121	13.00	1.38	936	128
	6'	15.62	1.21	1123	112	16.52	1.25	1194	116	16.38	1.31	1187	121	16.48	1.38	1199	128
	7'	19.62	1.21	1378	112	20.60	1.25	1454	116	20.62	1.31	1453	121	20.96	1.38	1483	128
	8'	29.61	1.21	1703	112	31.29	1.25	1836	116	31.12	1.31	1817	121	31.46	1.38	1829	128
10'	3'	7.04	1.49	574	139	7.41	1.55	602	144	7.42	1.62	606	150	7.56	1.71	647	188
	4'	9.58	1.49	724	139	10.12	1.55	765	144	10.26	1.62	776	150	10.30	1.71	799	188
	5'	12.47	1.49	916	139	13.21	1.55	965	144	13.21	1.62	977	150	13.40	1.71	1023	188
	6'	15.98	1.49	1179	139	16.89	1.55	1255	144	16.77	1.62	1252	150	16.88	1.71	1289	188
	7'	19.99	1.49	1438	139	20.98	1.55	1519	144	21.02	1.62	1524	150	21.37	1.71	1578	188
	8'	30.01	1.49	1758	139	31.70	1.55	1897	144	31.55	1.62	1892	150	31.90	1.71	1929	188
12'	8'	30.46	1.79	1799	196	32.18	1.86	1937	204	32.04	1.95	1930	213	32.41	2.06	1941	265

Span	Hgt.	40° Skew				45° Skew			
		Conc. C.Y.		Steel lbs.		Conc. C.Y.		Steel lbs.	
		1 Bbl.	△c	1 Bbl.	△s	1 Bbl.	△c	1 Bbl.	△s
6'	3'	6.94	1.13	504	105	7.20	1.22	524	113
	4'	9.68	1.13	692	105	9.99	1.22	712	113
	5'	12.81	1.13	909	105	13.24	1.22	932	113
	6'	16.56	1.13	1132	105	17.12	1.22	1178	113
	7'	20.90	1.13	1474	105	21.52	1.22	1526	113
8'	3'	7.34	1.48	575	137	7.63	1.60	597	149
	4'	10.08	1.48	730	137	10.42	1.60	751	149
	5'	13.21	1.48	947	137	13.67	1.60	972	149
	6'	16.97	1.48	1227	137	17.56	1.60	1276	149
	7'	21.31	1.48	1505	137	21.97	1.60	1564	149
	8'	32.05	1.48	1875	137	33.26	1.60	1947	149
10'	3'	7.74	1.83	663	201	8.07	1.99	686	217
	4'	10.50	1.83	823	201	10.87	1.99	844	217
	5'	13.63	1.83	1045	201	14.13	1.99	1070	217
	6'	17.39	1.83	1329	201	18.02	1.99	1379	217
	7'	21.75	1.83	1611	201	22.43	1.99	1670	217
	8'	32.51	1.83	1985	201	33.77	1.99	2058	217
12'	8'	33.04	2.20	1992	334	34.33	2.38	2069	361

OUTLET WINGS

Span	Hgt.	0° Skew				5° Skew				10° Skew				15° Skew			
		Conc. C.Y.		Steel lbs.		Conc. C.Y.		Steel lbs.		Conc. C.Y.		Steel lbs.		Conc. C.Y.		Steel lbs.	
		1 Bbl.	△c	1 Bbl.	△s	1 Bbl.	△c	1 Bbl.	△s	1 Bbl.	△c	1 Bbl.	△s	1 Bbl.	△c	1 Bbl.	△s
6'	3'	10.48	1.55	779	135	10.50	1.56	780	135	10.51	1.58	773	137	10.73	1.61	794	140
	4'	13.99	1.55	1019	135	14.18	1.56	1026	135	14.00	1.58	1011	137	14.24	1.61	1035	140
	5'	17.82	1.55	1278	135	18.02	1.56	1286	135	18.06	1.58	1293	137	18.32	1.61	1304	140
	6'	22.10	1.55	1516	135	22.34	1.56	1525	135	22.38	1.58	1559	137	22.66	1.61	1570	140
	7'	26.74	1.55	1838	135	26.94	1.56	1844	135	27.01	1.58	1925	137	27.66	1.61	1962	140
8'	3'	11.05	2.02	853	177	11.06	2.03	854	178	11.08	2.05	848	180	11.31	2.09	884	184
	4'	14.56	2.02	1059	177	14.75	2.03	1067	178	14.59	2.05	1052	180	14.84	2.09	1091	184
	5'	18.41	2.02	1319	177	18.62	2.03	1326	178	18.65	2.05	1334	180	18.93	2.09	1359	184
	6'	22.70	2.02	1615	177	22.94	2.03	1625	178	22.98	2.05	1659	180	23.28	2.09	1685	184
	7'	27.35	2.02	1879	177	27.56	2.03	1885	178	27.63	2.05	1967	180	28.30	2.09	2910	184
	8'	38.78	2.02	2354	177	38.54	2.03	2349	178	38.93	2.05	2368	180	39.47	2.09	2414	184
10'	3'	11.63	2.51	926	220	11.65	2.52	927	221	11.67	2.55	921	223	11.91	2.59	944	228
	4'	15.16	2.51	1136	220	15.35	2.52	1141	221	15.19	2.55	1126	223	15.45	2.59	1152	228
	5'	19.01	2.51	1400	220	19.22	2.52	1408	221	19.27	2.55	1416	223	19.55	2.59	1428	228
	6'	23.31	2.51	1701	220	23.56	2.52	1711	221	23.61	2.55	1746	223	23.91	2.59	1758	228
	7'	27.97	2.51	1970	200	28.19	2.52	1967	221	28.26	2.55	2049	223	28.94	2.59	2088	228
	8'	39.46	2.51	2449	220	39.22	2.52	2444	221	39.61	2.55	2464	223	40.16	2.59	2496	228
	9'	46.44	2.51	2858	220	46.54	2.52	2889	221	46.61	2.55	2873	223	47.59	2.59	2927	228
	10'	54.10	2.51	3354	220	54.10	2.52	3385	221	54.23	2.55	3368	223	55.30	2.59	3412	228
12'	8'	40.15	2.98	2497	264	39.92	2.99	2492	265	40.32	3.02	2512	268	40.88	3.08	2547	274

Span	Hgt.	20° Skew				25° Skew				30° Skew				35° Skew			
		Conc. C.Y.		Steel lbs.		Conc. C.Y.		Steel lbs.		Conc. C.Y.		Steel lbs.		Conc. C.Y.		Steel lbs.	
		1 Bbl.	△c	1 Bbl.	△s	1 Bbl.	△c	1 Bbl.	△s	1 Bbl.	△c	1 Bbl.	△s	1 Bbl.	△c	1 Bbl.	△s
6'	3'	10.77	1.65	797	143	10.70	1.71	783	149	10.65	1.79	793	156	10.79	1.90	803	165
	4'	14.50	1.65	1046	143	14.23	1.71	1033	149	14.37	1.79	1053	156	14.34	1.90	1041	165
	5'	18.60	1.65	1332	143	18.13	1.71	1294	149	18.07	1.79	1303	156	18.26	1.90	1317	165
	6'	22.98	1.65	1597	143	22.70	1.71	1575	149	22.44	1.79	1574	156	22.49	1.90	1584	165
	7'	28.01	1.65	1983	143	27.60	1.71	1951	149	27.50	1.79	1956	156	27.86	1.90	1979	165
8'	3'	11.37	2.15	888	189	11.31	2.23	874	196	11.28	2.34	870	204	11.46	2.47	896	216
	4'	15.11	2.15	1102	189	14.86	2.23	1090	196	15.02	2.34	1097	204	15.02	2.47	1101	216
	5'	19.22	2.15	1383	189	18.76	2.23	1348	196	18.73	2.34	1347	204	18.95	2.47	1377	216
	6'	23.62	2.15	1714	189	23.35	2.23	1691	196	23.11	2.34	1636	204	23.20	2.47	1693	216
	7'	28.66	2.15	2040	189	28.26	2.23	2009	196	28.19	2.34	2000	204	28.57	2.47	2040	216
	8'	40.26	2.15	2473	189	39.37	2.23	2448	196	39.10	2.34	2422	204	39.41	2.47	2438	216
10'	3'	11.99	2.67	948	235	11.95	2.77	937	243	11.95	2.89	946	254	12.16	3.06	990	298
	4'	15.74	2.67	1164	235	15.50	2.77	1158	243	15.69	2.89	1178	254	15.73	3.06	1199	298
	5'	19.86	2.67	1453	235	19.42	2.77	1415	243	19.41	2.89	1433	254	19.66	3.06	1480	298
	6'	24.27	2.67	1788	235	24.01	2.77	1767	243	23.80	2.89	1765	254	23.92	3.06	1799	298
	7'	29.32	2.67	2110	235	28.94	2.77	2090	243	28.89	2.89	2094	254	29.31	3.06	2151	298
	8'	40.97	2.67	2557	235	40.09	2.77	2525	243	39.85	2.89	2520	254	40.19	3.06	2554	298
	9'	48.46	2.67	2973	235	47.22	2.77	2966	243	47.58	2.89	3014	254	47.96	3.06	3057	298
	10'	56.38	2.67	3465	235	55.59	2.77	3438	243	55.30	2.89	3403	254	55.77	3.06	3459	298
12'	8'	41.70	3.17	2609	311	40.83	3.29	2588	323	40.61	3.44	2575	337	40.99	3.64	2591	397

Span	Hgt.	40° Skew				45° Skew			
		Conc. C.Y.		Steel lbs.		Conc. C.Y.		Steel lbs.	
		1 Bbl.	△c	1 Bbl.	△s	1 Bbl.	△c	1 Bbl.	△s
6'	3'	10.97	2.03	809	177	11.36	2.20	844	191
	4'	14.54	2.03	1055	177	14.98	2.20	1089	191
	5'	18.49	2.03	1329	177	19.05	2.20	1367	191
	6'	23.07	2.03	1609	177	23.76	2.20	1670	191
	7'	28.24	2.03	2009	177	28.99	2.20	2076	191
8'	3'	11.69	2.64	904	231	12.13	2.86	942	251
	4'	15.27	2.64	1116	231	15.76	2.86	1153	251
	5'	19.23	2.64	1391	231	19.84	2.86	1432	251
	6'	23.82	2.64	1729	231	24.56	2.86	1794	251
	7'	28.99	2.64	2064	231	29.80	2.86	2139	251
	8'	40.06	2.64	2486	231	41.47	2.86	2579	251
10'	3'	12.43	3.27	1017	318	12.93	3.54	1049	344
	4'	16.02	3.27	1234	318	16.57	3.54	1264	344
	5'	19.99	3.27	1513	318	20.66	3.54	1547	344
	6'	24.58	3.27	1855	318	25.39	3.54	1914	344
	7'	29.77	3.27	2194	318	30.64	3.54	2263	344
	8'	40.88	3.27	2621	318	42.35	3.54	2708	344
	9'	48.42	3.27	3094	318	50.56	3.54	3206	344
	10'	57.02	3.27	3554	318	59.01	3.54	3649	344
12'	8'	41.72	3.89	2646	475	43.25	4.21	2746	513

NOTES :

All quantities are for headwalls of barrels shown in Table No. 1 (0-10' Fill).

Quantities are shown for single barrel culvert only.

Multi-barrel culvert headwall quantities are obtained by adding, for each additional barrel, △s and △c to the inlet and outlet quantities.

NOTATIONS :

△c = inlet or outlet concrete quantity per additional barrel.

△s = inlet or outlet steel quantity per additional barrel.

NO.	DESCRIPTION OF REVISIONS	DATE
1	Revised Quantities	6-88
2		
3		
4		

MADE BY J.M.

DESIGN
DRAWN
CHECKED

CADD FILENAME= ZFA
VIEW NAME=

DESIGN APPROVED
F. D. Davis

APPROVED FOR DISTRIBUTION
T. D. Bryant, II.

ARIZONA
DEPARTMENT OF TRANSPORTATION
HIGHWAYS DIVISION
STANDARD DRAWINGS

HEADWALL QUANTITIES
6:1 SLOPE

REVISION 7-88

STANDARD NO. B-05.30

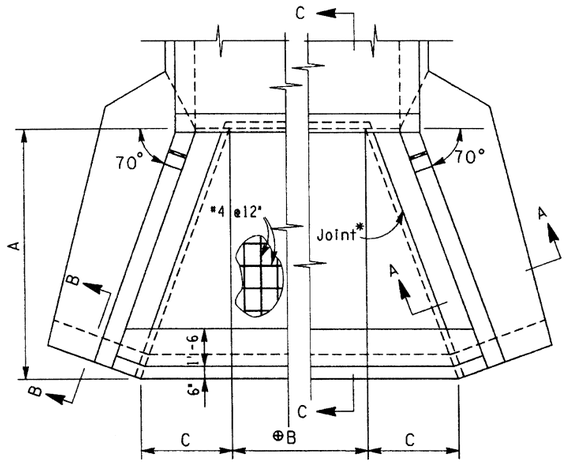

PLAN

Apron for 0° skew box culvert

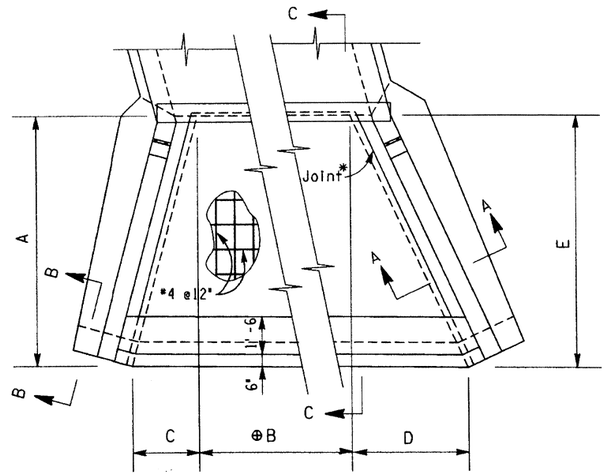

PLAN

Apron for 0° to 15° skew box culvert

Span	△									
	0° Skew	5° Skew	10° Skew	15° Skew	20° Skew	25° Skew	30° Skew	35° Skew	40° Skew	45° Skew
6'	6'-8	6'-8¼	6'-9¼	6'-10⅞	7'-1⅞	7'-4¼	7'-8⅜	8'-1⅝	8'-8⅜	9'-5⅛
8'	8'-9	8'-9⅜	8'-10⅝	9'-0¾	9'-3¾	9'-7⅞	10'-1¼	10'-8⅛	11'-5⅛	12'-4½
10'	10'11	10'-11½	11'-1	11'-3⅝	11'-7⅜	12'-0½	12'-7¼	13'-3⅞	14'-3	15'-5¼
12'	13'-1	13'-1⅝	13'-3⅜	13'-6½	13'-11⅞	14'-5¼	15'-1¼	15'-11⅝	17'-1	18'-6

⊕ Dimension varies with number of barrels. △ equals length to be added to dimension 'B' for each additional barrel.

* Optional construction joint. Apron may be poured with wingwall footings and bottom slab of barrel.

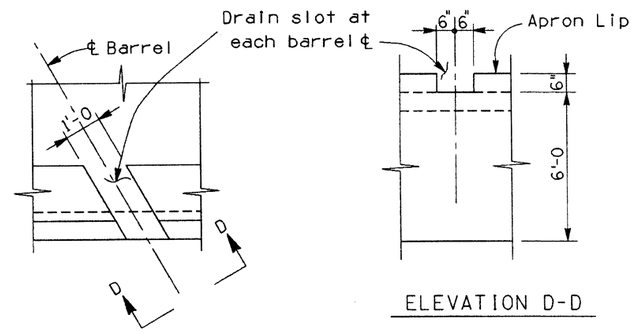

ELEVATION D-D

APRON DRAIN DETAIL

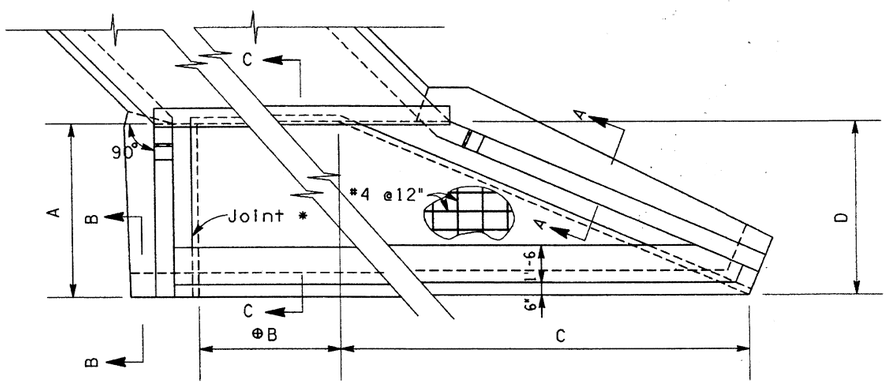

PLAN

Apron for 20° to 45° skew box culvert

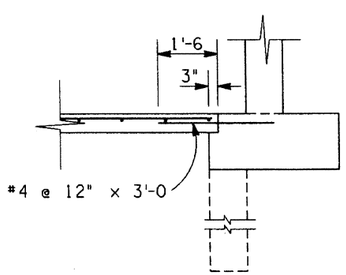

SECTION A-A

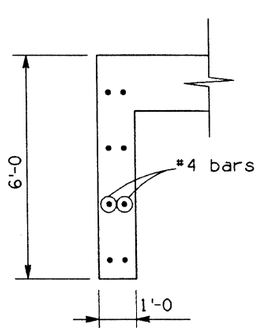

SECTION B-B

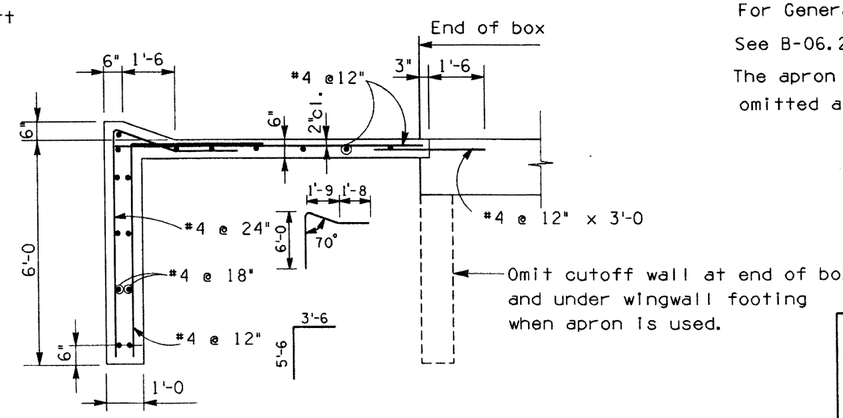

SECTION C-C

NOTES:

For General Notes and miscellaneous details see B-01.10.

See B-06.20, B-06.30 and B-06.40 for apron dimensions and quantities.

The apron quantities take into consideration the cutoff walls being omitted along outlet headwall and shall be used on new box culverts only.

NO	DESCRIPTION OF REVISIONS	MADE BY	DATE
1	Revised cutoff wall & △ table	J.M.	6-88
2	Cutoff wall location Section C-C	J.M.	4-92
3			
4			

DESIGN
DRAWN
CHECKED

CADD FILENAME= ZFA
VIEW NAME=

DESIGN APPROVED

APPROVED FOR DISTRIBUTION

ARIZONA
DEPARTMENT OF TRANSPORTATION
HIGHWAYS DIVISION
STANDARD DRAWINGS

OUTLET APRON DETAILS

REVISION 4-92

STANDARD NO. B-06.10

DIMENSIONS

Span	Hgt.	0° Skew			5° Skew				
		A	B	C	A	B	C	D	E
6'	3'	6'-7½	4'-8¼	2'-4⅞	6'-8	4'-8½	1'-9⅜	3'-0½	6'-6¼
	4'	8'-0⅜	4'-8¼	2'-11⅛	8'-1⅜	4'-8½	2'-2⅛	3'-8⅛	7'-10⅝
	5'	9'-5¼	4'-8¼	3'-5¼	9'-6¾	4'-8½	2'-6¾	4'-6¼	9'-8⅜
	6'	10'-10¼	4'-8¼	3'-11⅜	11'-0⅛	4'-8½	2'-11⅜	5'-1⅞	11'-0⅝
	7'	12'-3⅛	4'-8¼	4'-5½	12'-5½	4'-8½	3'-4⅛	5'-9½	12'-5
8'	3'	6'-7½	6'-10¼	2'-4⅞	6'-8	6'-10½	1'-9⅜	3'-0½	6'-6¼
	4'	8'-0⅜	6'-10¼	2'-11⅛	8'-1⅜	6'-10½	2'-2⅛	3'-8⅛	7'-10⅝
	5'	9'-5¼	6'-10¼	3'-5¼	9'-6¾	6'-10½	2'-6¾	4'-6¼	9'-8⅜
	6'	10'-10¼	6'-10¼	3'-11⅜	11'-0⅛	6'-10½	2'-11⅜	5'-1⅞	11'-0⅝
	7'	12'-3⅛	6'-10¼	4'-5½	12'-5½	6'-10½	3'-4⅛	5'-9½	12'-5
	8'	14'-3¾	5'-9½	5'-2½	14'-0½	5'-9¾	3'-9⅛	6'-6¼	13'-11⅞
10'	3'	6'-7½	9'-0¼	2'-4⅞	6'-8	9'-0⅝	1'-9⅜	3'-0½	6'-6¼
	4'	8'-0⅜	9'-0¼	2'-11⅛	8'-1⅜	9'-0⅝	2'-2⅛	3'-8⅛	7'-10⅝
	5'	9'-5¼	9'-0¼	3'-5¼	9'-6¾	9'-0⅝	2'-6¾	4'-6¼	9'-8⅜
	6'	10'-10¼	9'-0¼	3'-11⅜	11'-0⅛	9'-0⅝	2'-11⅜	5'-1⅞	11'-0⅝
	7'	12'-3⅛	9'-0¼	4'-5½	12'-5½	9'-0⅝	3'-4⅛	5'-9½	12'-5
	8'	14'-3¾	7'-11½	5'-2½	14'-0½	7'-11¾	3'-9⅛	6'-6¼	13'-11⅞
	9'	15'-9	7'-9⅜	5'-8¾	15'-6⅛	7'-9⅝	4'-1⅞	7'-4⅝	15'-10
	10'	17'-2¼	7'-7¼	6'-3	16'-11¾	7'-7½	4'-6⅝	8'-0⅜	17'-2¾
12'	8'	14'-3¾	10'-3½	5'-2½	14'-0½	10'-3⅞	3'-9⅛	6'-6¼	13'-11⅞
	9'	15'-9	10'-1	5'-8¾	5'-6⅛	10'-1¾	4'-1⅞	7'-4⅝	15'-10
	10'	17'-2¼	9'-11¼	6'-3	16'-11¾	9'-11⅝	4'-6⅝	8'-0⅜	17'-2¾
	11'	18'-7½	9'-9⅛	6'-9⅜	18'-5⅜	9'-9½	4'-11⅜	8'-8¼	18'-7½
	12'	20'-0¾	9'-7	7'-3⅝	19'-11⅛	9'-7⅜	5'-4⅛	9'-4	20'-0¼

Span	Hgt.	10° Skew					15° Skew				
		A	B	C	D	E	A	B	C	D	E
6'	3'	6'-8	4'-9⅛	1'-2⅛	3'-11¼	6'-9¾	6'-1¼	4'-10⅛	6 3/8"	4'-7⅜	6'-7⅛
	4'	8'-1⅝	4'-9⅛	1'-5¼	4'-8¼	8'-1⅜	7'-7¼	4'-10⅛	8"	5'-9⅛	8'-2¾
	5'	9'-7⅜	4'-9⅛	1'-8⅜	5'-5¼	9'-4⅞	9'-1⅛	4'-10⅛	9 1/2"	6'-7½	9'-5½
	6'	11'-1⅛	4'-9⅛	1'-11½	6'-5¼	11'-1¾	10'-7⅛	4'-10⅛	11 1/8"	7'-9¼	11'-1¼
	7'	12'-6⅞	4'-9⅛	2'-2⅝	7'-2¼	12'-5¼	12'-1	4'-10⅛	1'-0⅝	8'-7⅝	12'-3⅞
8'	3'	6'-8	6'-11½	1'-2⅛	3'-11¼	6'-9¾	6'-1¼	7'-1⅛	6 3/8"	4'-7⅜	6'-7⅛
	4'	8'-1⅝	6'-11½	1'-5¼	4'-8¼	8'-1⅜	7'-7¼	7'-1⅛	8"	5'-9⅛	8'-2¾
	5'	9'-7⅜	6'-11½	1'-8⅜	5'-5¼	9'-4⅞	9'-1⅛	7'-1⅛	9 1/2"	6'-7½	9'-5½
	6'	11'-1⅛	6'-11½	1'-11½	6'-5¼	11'-1¾	10'-7⅛	7'-1⅛	11 1/8"	7'-9¼	11'-1¼
	7'	12'-6⅞	6'-11½	2'-2⅝	7'-2¼	12'-5¼	12'-1	7'-1⅛	1'-0⅝	8'-7⅝	12'-3⅞
	8'	14'-1⅝	5'-10½	2'-5⅞	8'-0⅞	13'-11⅞	13'-7½	5'-11¾	1'-2¼	9'-8⅜	13'-10⅛
10'	3'	6'-8	9'-1⅞	1'-2⅛	3'-11¼	6'-9¾	6'-1¼	9'-4	6 3/8"	4'-7⅜	6'-7⅛
	4'	8'-1⅝	9'-1⅞	1'-5¼	4'-8¼	8'-1⅜	7'-7¼	9'-4	8"	5'-9⅛	8'-2¾
	5'	9'-7⅜	9'-1⅞	1'-8⅜	5'-5¼	9'-4⅞	9'-1⅛	9'-4	9 1/2"	6'-7½	9'-5½
	6'	11'-1⅛	9'-1⅞	1'-11½	6'-5¼	11'-1¾	10'-7⅛	9'-4	11 1/8"	7'-9¼	11'-1¼
	7'	12'-6⅞	9'-1⅞	2'-2⅝	7'-2¼	12'-5¼	12'-1	9'-4	1'-0⅝	8'-7⅝	12'-3⅞
	8'	14'-1⅝	8'-0⅞	2'-5⅞	8'-0⅞	13'-11⅞	13'-7½	8'-2⅝	1'-2¼	9'-8⅜	13'-10⅛
	9'	15'-7½	7'-10¾	2'-9	9'-1¼	15'-9⅛	15'-1½	8'-0⅜	1'-3⅞	10'-10½	15'-6⅜
	10'	17'-1⅜	7'-8½	3'-0¼	9'-10½	17'-1¼	16'-7½	7'-10¼	1'-5½	11'-9¼	16'-9⅝
12'	8'	14'-1⅝	10'-5¼	2'-5⅞	8'-0⅞	13'-11⅞	13'-7½	10'-7⅝	1'-2¼	9'-8⅜	13'-10⅛
	9'	15'-7½	10'-3⅛	2'-9	9'-1¼	15'-9⅛	15'-1½	10'-5⅜	1'-3⅞	10'-10½	15'-6⅜
	10'	17'-1⅜	10'-1	3'-0¼	9'-10½	17'-1¼	16'-7½	10'-3⅛	1'-5½	11'-9¼	16'-9⅝
	11'	18'-7⅜	9'-10¾	3'-3⅜	10'-7¾	18'-5⅜	18'-1½	10'-1	1'-7	12'-11⅜	18'-5⅞
	12'	20'-1¼	9'-8⅝	3'-6½	11'-8⅛	20'-2⅝	19'-7½	9'-10¾	1'-8⅝	13'-10⅛	19'-9¼

Span	Hgt.	20° Skew				25° Skew			
		A	B	C	D	A	B	C	D
6'	3'	6'-0	4'-11¾	5'-7½	6'-8½	6'-0	5'-2⅝	6'-8⅝	6'-8⅝
	4'	7'-6	4'-11¾	6'-11	8'-2⅞	7'-6	5'-2⅝	8'-1⅝	8'-1⅝
	5'	9'-0	4'-11¾	7'-10½	9'-4¾	8'-6	5'-2⅝	9'-2¼	9'-2¼
	6'	10'-6	4'-11¾	9'-2	10'-11⅛	10'-0	5'-2⅝	10'-7¼	10'-7¼
	7'	12'-0	4'-11¾	10'-1½	12'-0⅞	11'-6	5'-2⅝	12'-0¼	12'-0¼
8'	3'	6'-0	7'-3⅜	5'-7½	6'-8½	6'-0	7'-7⅜	6'-8⅝	6'-8⅝
	4'	7'-6	7'-3⅜	6'-11	8'-2⅞	7'-6	7'-7⅜	8'-1⅝	8'-1⅝
	5'	9'-0	7'-3⅜	7'-10½	9'-4¾	8'-6	7'-7⅜	9'-2¼	9'-2¼
	6'	10'-6	7'-3⅜	9'-2	10'-11⅛	10'-0	7'-7⅜	10'-7¼	10'-7¼
	7'	12'-0	7'-3⅜	10'-1½	12'-0⅞	11'-6	7'-7⅜	12'-0¼	12'-0¼
	8'	13'-6	6'-1½	11'-8¼	13'-11⅛	13'-0	6'-4⅞	13'-9½	13'-9½
10'	3'	6'-0	9'-7	5'-7½	6'-8½	13'-0	10'-0	6'-8⅝	6'-8⅝
	4'	7'-6	9'-7	6'-11	8'-2⅞	7'-6	10'-0	8'-1⅝	8'-1⅝
	5'	9'-0	9'-7	7'-10½	9'-4¾	8'-6	10'-0	9'-2¼	9'-2¼
	6'	10'-6	9'-7	9'-2	10'-11⅛	10'-0	10'-0	10'-7¼	10'-7¼
	7'	12'-0	9'-7	10'-1½	12'-0⅞	11'-6	10'-0	12'-0¼	12'-0¼
	8'	13'-6	8'-5¼	11'-8¼	13'-11⅛	13'-0	8'-9½	13'-9½	13'-9½
	9'	15'-0	8'-2⅞	13'-0⅛	15'-6⅛	14'-6	8'-7⅛	15'-3⅛	15'-3⅛
	10'	16'-5	8'-0⅝	14'-0¼	16'-8⅝	15'-6	8'-4¾	16'-4⅝	16'-4⅝
12'	8'	13'-6	10'-11	11'-8¼	13'-11⅛	13'-0	11'-4⅜	13'-9½	13'-9½
	9'	15'-0	10'-8¾	13'-0⅛	15'-6⅛	14'-6	11'-2	15'-3⅛	15'-3⅛
	10'	16'-5	10'-6⅜	14'-0¼	16'-8⅝	15'-6	10'-11⅝	16'-4⅝	16'-4⅝
	11'	18'-0	10'-4⅛	15'-4¼	18'-3⅝	17'-0	10'-9⅛	17'-10⅛	17'-10⅛
	12'	19'-6	10'-1¾	16'-4⅜	19'-6	18'-6	10'-6¾	19'-3⅞	19'-3⅞

Span	Hgt.	30° Skew				35° Skew			
		A	B	C	D	A	B	C	D
6'	3'	5'-6	5'-6⅜	7'-10⅝	6'-7⅜	5'-6	5'-10⅞	9'-1½	6'-4¾
	4'	7'-0	5'-6⅜	9'-5	7'-10¾	6'-6	5'-10⅞	10'-9⅛	7'-6½
	5'	8'-0	5'-6⅜	10'-11¾	9'-2¼	8'-0	5'-10⅞	12'-9¾	8'-11⅝
	6'	9'-6	5'-6⅜	12'-5¾	10'-5⅝	9'-0	5'-10⅞	14'-5⅜	10'-1⅜
	7'	11'-0	5'-6⅜	14'-0⅛	11'-9	10'-6	5'-10⅞	16'-1⅛	11'-3¼
8'	3'	5'-6	8'-0⅜	7'-10⅝	6'-7⅜	5'-6	8'-6⅝	9'-1½	6'-4¾
	4'	7'-0	8'-0⅜	9'-5	7'-10¾	6'-6	8'-6⅝	10'-9⅛	7'-6½
	5'	8'-0	8'-0⅜	10'-11¾	9'-2¼	8'-0	8'-6⅝	12'-9¾	8'-11⅝
	6'	9'-6	8'-0⅜	12'-5¾	10'-5⅝	9'-0	8'-6⅝	14'-5⅜	10'-1⅜
	7'	11'-0	8'-0⅜	14'-0⅛	11'-9	10'-6	8'-6⅝	16'-1⅛	11'-3¼
	8'	12'-0	6'-9	16'-0	13'-5⅛	11'-6	7'-2⅛	18'-8⅝	13'-1⅜
10'	3'	5'-6	10'-6⅜	7'-10⅝	6'-7⅜	5'-6	11'-2⅜	9'-1½	6'-4¾
	4'	7'-0	10'-6⅜	9'-5	7'-10¾	6'-6	11'-2⅜	10'-9⅛	7'-6½
	5'	8'-0	10'-6⅜	10'-11¾	9'-2¼	8'-0	11'-2⅜	12'-9¾	8'-11⅝
	6'	9'-6	10'-6⅜	12'-5¾	10'-5⅝	9'-0	11'-2⅜	14'-5⅜	10'-1⅜
	7'	11'-0	10'-6⅜	14'-0⅛	11'-9	10'-6	11'-2⅜	16'-1⅛	11'-3¼
	8'	12'-0	9'-3	16'-0	13'-5⅛	11'-6	9'-9⅞	18'-8⅝	13'-1⅜
	9'	13'-6	9'-0½	17'-7¼	14'-9¼	13'-0	9'-7⅛	20'-5½	14'-3⅞
	10'	15'-0	8'-9⅞	19'-2⅝	16'-1½	14'-0	9'-4⅜	22'-7¼	15'-9⅞
12'	8'	12'-0	11'-11¾	16'-0	13'-5⅛	11'-6	12'-8⅛	18'-8⅝	13'-1⅜
	9'	13'-6	11'-8⅞	17'-7¼	14'-9¼	13'-0	12'-5⅜	20'-5½	14'-3⅞
	10'	15'-0	11'-6¼	19'-2⅝	16'-1½	14'-0	12'-2⅝	22'-7¼	15'-9⅞
	11'	16'-0	11'-3¾	20'-9⅞	17'-5⅝	15'-6	11'-11⅞	24'-4⅛	17'-0½
	12'	17'-6	11'-1⅛	22'-5⅛	18'-9⅞	16'-6	11'-9⅛	26'-0⅞	18'-3⅛

Span	Hgt.	40° Skew				45° Skew			
		A	B	C	D	A	B	C	D
6'	3'	5'-0	6'-4½	10'-10⅞	6'-3⅝	5'-0	6'-11⅛	12'-5⅛	5'-9⅝
	4'	6'-6	6'-4½	12'-7¾	7'-3⅝	6'-0	6'-11⅛	15'-1¾	7'-0¾
	5'	7'-6	6'-4½	14'-9⅝	8'-6⅝	7'-0	6'-11⅛	17'-5	8'-1½
	6'	8'-6	6'-4½	16'-11⅝	9'-9⅝	8'-6	6'-11⅛	19'-8⅛	9'-2⅛
	7'	10'-0	6'-4½	19'-1⅝	11'-0⅝	9'-6	6'-11⅛	21'-11⅜	10'-2¾
8'	3'	5'-0	9'-2⅜	10'-10⅞	6'-3⅝	5'-0	9'-11⅞	12'-5⅛	5'-9⅝
	4'	6'-6	9'-2⅜	12'-7¾	7'-3⅝	6'-0	9'-11⅞	15'-1¾	7'-0¾
	5'	7'-6	9'-[illegible]	14'-9⅝	8'-6⅝	7'-0	9'-11⅞	17'-5	8'-1½
	6'	8'-6	9'-2⅜	16'-11⅝	9'-9⅝	8'-6	9'-11⅞	19'-8⅛	9'-2⅛
	7'	10'-0	9'-2⅜	19'-1⅝	11'-0⅝	9'-6	9'-11⅞	21'-11⅜	10'-2¾
	8'	11'-0	7'-8⅜	21'-7½	12'-5¾	11'-0	8'-3¾	25'-7⅝	11'-11½
10'	3'	5'-0	12'-0⅜	10'-10⅞	6'-3⅝	5'-0	13'-0¾	12'-5⅛	5'-9⅝
	4'	6'-6	12'-0⅜	12'-7¾	7'-3⅝	6'-0	13'-0¾	15'-1¾	7'-0¾
	5'	7'-6	12'-0⅜	14'-9⅝	8'-6⅝	7'-0	13'-0¾	17'-5	8'-1½
	6'	8'-6	12'-0⅜	16'-11⅝	9'-9⅝	8'-6	13'-0¾	19'-8⅛	9'-2⅛
	7'	10'-0	12'-0⅜	19'-1⅝	11'-0⅝	9'-6	13'-0¾	21'-11⅜	10'-2¾
	8'	11'-0	10'-6⅜	21'-7½	12'-5¾	11'-0	11'-4½	25'-7⅝	11'-11½
	9'	12'-6	10'-3⅜	23'-10⅞	13'-9⅝	12'-0	11'-1⅛	28'-0¾	13'-1
	10'	13'-6	10'-0⅜	26'-2⅜	15'-1½	13'-0	10'-9¾	30'-5⅞	14'-2⅝
12'	8'	11'-0	13'-6⅞	21'-7½	12'-5¾	11'-0	14'-8⅛	25'-7⅝	11'-11½
	9'	12'-6	13'-3⅞	23'-10⅞	13'-9⅝	12'-0	14'-4¾	28'-0¾	13'-1
	10'	13'-6	13'-0⅞	26'-2⅜	15'-1½	13'-0	14'-1⅜	30'-5⅞	14'-2⅝
	11'	15'-0	12'-9⅞	28'-5⅛	16'-5⅜	14'-6	13'-10	32'-11⅛	15'-4¼
	12'	16'-0	12'-6⅞	30'-4⅛	17'-6¼	15'-6	13'-6⅝	35'-9⅝	16'-8⅜

QUANTITIES

Span	Hgt.	0° Skew				5° Skew				10° Skew				15° Skew				20° Skew			
		Conc. C.Y.		Steel lbs.		Conc. C.Y.		Steel lbs.		Conc. C.Y.		Steel lbs.		Conc. C.Y.		Steel lbs.		Conc. C.Y.		Steel lbs.	
		1Bbl.	Δc	1Bbl.	Δs	1Bbl.	Δc	1Bbl.	Δs	1Bbl.	Δc	1Bbl.	Δs	1Bbl.	Δc	1Bbl.	Δs	1Bbl.	Δc	1Bbl.	Δs
6'	3'	0.44	1.05	22	91	0.44	1.05	22	91	0.46	1.08	25	94	0.50	1.06	27	92	0.55	1.08	33	94
	4'	0.50	1.23	31	104	0.50	1.23	31	104	0.51	1.26	34	107	0.57	1.26	39	107	0.62	1.28	45	109
	5'	0.52	1.40	42	117	0.53	1.43	44	119	0.54	1.43	44	120	0.59	1.43	49	120	0.64	1.46	54	122
	6'	0.57	1.58	54	130	0.58	1.61	57	132	0.61	1.63	61	135	0.66	1.63	65	135	0.72	1.66	71	137
	7'	0.65	1.75	69	143	0.66	1.78	72	145	0.69	1.81	76	148	0.74	1.80	80	148	0.79	1.83	85	150
8'	3'	0.84	1.45	51	118	0.84	1.45	51	118	0.86	1.49	55	122	0.90	1.46	56	119	0.96	1.50	63	122
	4'	0.95	1.68	64	135	0.95	1.68	64	135	0.97	1.72	68	138	1.03	1.72	73	139	1.10	1.76	79	142
	5'	1.03	1.91	79	152	1.05	1.95	82	155	1.05	1.95	83	155	1.11	1.95	87	156	1.17	1.99	93	159
	6'	1.13	2.14	96	169	1.16	2.17	99	172	1.19	2.21	104	175	1.25	2.21	108	175	1.31	2.25	115	178
	7'	1.27	2.36	115	186	1.29	2.40	119	189	1.33	2.44	123	192	1.38	2.44	127	192	1.44	2.48	133	195
	8'	1.56	2.70	112	210	1.54	2.66	108	208	1.59	2.70	113	211	1.64	2.70	117	211	1.76	2.77	130	217
10'	3'	1.28	1.88	85	147	1.28	1.88	85	148	1.32	1.93	89	151	1.35	1.89	90	148	1.42	1.94	97	153
	4'	1.45	2.16	102	169	1.46	2.16	102	169	1.49	2.22	107	173	1.55	2.21	111	173	1.63	2.27	119	177
	5'	1.59	2.45	121	190	1.62	2.50	125	193	1.63	2.50	126	194	1.69	2.50	130	194	1.76	2.55	138	198
	6'	1.76	2.73	143	211	1.79	2.78	147	214	1.84	2.83	152	218	1.89	2.83	157	218	1.97	2.88	164	222
	7'	1.95	3.02	166	232	1.99	3.07	171	236	2.04	3.11	176	239	2.09	3.11	180	239	2.17	3.16	187	243
	8'	2.33	3.43	169	263	2.30	3.39	166	259	2.36	3.43	171	263	2.41	3.43	175	263	2.56	3.52	189	270
	9'	2.56	3.72	190	284	2.57	3.72	191	284	2.64	3.77	197	288	2.69	3.77	201	288	2.85	3.86	216	295
	10'	2.81	4.01	212	306	2.82	4.01	213	306	2.89	4.06	219	310	2.94	4.06	223	311	3.10	4.15	237	316
12'	8'	3.15	4.21	227	315	3.11	4.16	223	311	3.17	4.22	229	315	3.23	4.22	233	315	3.39	4.33	249	324
	9'	3.44	4.56	253	341	3.45	4.56	254	341	3.52	4.62	260	345	3.58	4.62	265	345	3.76	4.73	281	353
	10'	3.75	4.91	279	367	3.76	4.91	280	366	3.83	4.97	287	371	3.89	4.97	291	371	4.07	5.08	307	379
	11'	4.07	5.26	307	392	4.08	5.26	308	392	4.16	5.32	315	397	4.29	5.37	326	400	4.47	5.47	342	409
	12'	4.42	5.61	337	418	4.43	5.61	338	418	4.58	5.72	352	427	4.63	5.71	355	426	4.83	5.82	371	434

Span	Hgt.	25° Skew				30° Skew				35° Skew				40° Skew				45° Skew			
		Conc. C.Y.		Steel lbs.		Conc. C.Y.		Steel lbs.		Conc. C.Y.		Steel lbs.		Conc. C.Y.		Steel lbs.		Conc. C.Y.		Steel lbs.	
		1Bbl.	Δc	1Bbl.	Δs	1Bbl.	Δc	1Bbl.	Δs	1Bbl.	Δc	1Bbl.	Δs	1Bbl.	Δc	1Bbl.	Δs	1Bbl.	Δc	1Bbl.	Δs
6'	3'	0.77	1.13	52	98	1.03	1.13	73	99	1.27	1.18	95	104	1.58	1.22	123	108	1.84	1.28	147	113
	4'	0.89	1.32	67	113	1.20	1.33	92	114	1.50	1.34	116	116	1.84	1.42	147	123	2.25	1.47	185	128
	5'	0.98	1.46	81	123	1.37	1.50	113	126	1.75	1.57	146	132	2.15	1.60	180	136	2.60	1.65	220	141
	6'	1.11	1.66	101	138	1.55	1.69	137	141	2.00	1.73	173	144	2.50	1.78	216	150	3.02	1.88	260	158
	7'	1.28	1.86	124	153	1.78	1.89	164	156	2.28	1.93	204	159	2.91	2.00	257	166	3.46	2.06	302	171
8'	3'	1.19	1.55	83	127	1.46	1.57	105	129	1.72	1.64	128	134	2.05	1.69	157	139	2.33	1.77	183	146
	4'	1.38	1.81	103	146	1.69	1.83	128	148	2.00	1.85	153	150	2.37	1.95	186	159	2.81	2.03	226	166
	5'	1.51	2.00	120	160	1.91	2.04	154	164	2.32	2.14	189	172	2.74	2.19	223	176	3.21	2.27	265	183
	6'	1.71	2.26	145	179	2.17	2.30	182	183	2.62	2.35	220	188	3.14	2.43	264	194	3.71	2.56	311	205
	7'	1.95	2.52	173	199	2.46	2.56	214	203	2.98	2.61	254	207	3.63	2.72	311	216	4.21	2.80	357	223
	8'	2.35	2.81	175	220	2.93	2.81	220	221	3.58	2.89	273	228	4.24	2.97	326	235	5.12	3.16	396	250
10'	3'	1.67	2.01	119	158	1.94	2.03	141	160	2.22	2.12	166	167	2.57	2.19	197	173	2.88	2.30	224	182
	4'	1.93	2.34	144	182	2.25	2.36	169	184	2.56	2.39	195	187	2.97	2.52	230	198	3.43	2.63	272	206
	5'	2.11	2.57	165	199	2.52	2.63	199	204	2.96	2.75	236	214	3.40	2.82	273	220	3.90	2.92	316	228
	6'	2.38	2.89	195	224	2.85	2.95	233	228	3.32	3.02	272	234	3.87	3.12	318	241	4.47	3.29	368	255
	7'	2.68	3.22	228	248	3.21	3.28	270	253	3.74	3.34	312	258	4.43	3.48	370	269	5.03	3.58	419	277
	8'	3.16	3.58	236	275	3.74	3.59	281	276	4.42	3.69	336	284	5.10	3.80	390	293	6.03	4.04	465	311
	9'	3.52	3.91	268	299	4.16	3.92	317	300	4.91	4.03	376	309	5.75	4.17	444	320	6.69	4.35	518	334
	10'	3.80	4.15	291	317	4.62	4.25	355	325	5.48	4.34	426	332	6.38	4.48	497	343	7.37	4.65	574	357
12'	8'	4.01	4.40	297	329	4.60	4.42	342	330	5.31	4.55	399	340	6.02	4.69	455	351	7.01	4.99	534	373
	9'	4.44	4.80	334	359	5.09	4.82	383	360	5.87	4.95	445	370	6.75	5.13	514	384	7.73	5.35	592	400
	10'	4.78	5.08	361	380	5.63	5.21	427	389	6.50	5.32	499	398	7.44	5.50	572	411	8.48	5.72	652	427
	11'	5.26	5.48	402	409	6.12	5.54	469	414	7.13	5.72	549	427	8.26	5.95	638	441	9.39	6.17	722	461
	12'	5.77	5.88	445	439	6.71	5.94	517	444	7.72	6.05	598	452	8.91	6.27	690	468	10.36	6.57	800	491

NOTATIONS:

Δc = Apron concrete quantity per additional barrel.

Δs = Apron steel quantity per additional barrel.

NO	DESCRIPTION OF REVISIONS	MADE BY	DATE
1	Revised Quantities	C.H.	6-88
2			
3			
4			

DESIGN
DRAWN
CHECKED

Registered Professional Engineer (Civil) Certificate No. 9910 F. DANIEL DAVIS Date Signed 8-1-88 Arizona U.S.A.

DESIGN APPROVED

APPROVED FOR DISTRIBUTION

ARIZONA
DEPARTMENT OF TRANSPORTATION
HIGHWAYS DIVISION
STANDARD DRAWINGS

OUTLET APRON
DIMENSIONS & QUANTITIES
2 : 1 SLOPE

REVISION 7-88

STANDARD NO. B-06.20

CADD FILENAME= ZFA
VIEW NAME=

DIMENSIONS

Span	Hgt.	0° Skew A	0° Skew B	0° Skew C	5° Skew A	5° Skew B	5° Skew C	5° Skew D	5° Skew E
6'	3'	9'-10⅞	4'-8¼	3'-7¼	10'-0⅝	4'-8½	2'-8¼	4'-8¾	10'-1¾
	4'	12'-3⅛	4'-8¼	4'-5½	12'-5½	4'-8½	3'-4⅛	5'-9½	12'-5
	5'	14'-7¼	4'-8¼	5'-3¾	14'-10½	4'-8½	3'-11⅞	6'-10⅛	14'-8⅛
	6'	16'-11½	4'-8¼	6'-2⅛	16'-9¾	4'-8½	4'-6	7'-10⅞	16'-11⅜
	7'	19'-3⅝	4'-8¼	7'-0⅜	19'-2¾	4'-8½	5'-1¾	8'-11½	19'-2½
8'	3'	9'-10⅞	6'-10¼	3'-7¼	10'-0⅝	6'-10½	2'-8¼	4'-8¾	10'-1¾
	4'	12'-3⅛	6'-10¼	4'-5½	12'-5½	6'-10½	3'-4⅛	5'-9½	12'-5
	5'	14'-7¼	6'-10¼	5'-3¾	14'-10½	6'-10½	3'-11⅞	6'-10⅛	14'-8⅛
	6'	16'-11½	6'-10¼	6'-2⅛	16'-9¾	6'-10½	4'-6	7'-10⅞	16'-11⅜
	7'	19'-3⅝	6'-10¼	7'-0⅜	19'-2¾	6'-10½	5'-1¾	8'-11½	19'-2½
	8'	21'-9⅞	5'-9½	7'-11⅜	21'-9¼	5'-9¾	5'-10	10'-1⅜	21'-8¼
10'	3'	9'-10⅞	9'-0¼	3'-7¼	10'-0⅝	9'-0⅝	2'-8¼	4'-8¾	10'-1¾
	4'	12'-3⅛	9'-0¼	4'-5½	12'-5½	9'-0⅝	3'-4⅛	5'-9½	12'-5
	5'	14'-7¼	9'-0¼	5'-3¾	14'-10½	9'-0⅝	3'-11⅞	6'-10⅛	14'-8⅛
	6'	16'-11½	9'-0¼	6'-2⅛	16'-9¾	9'-0⅝	4'-6	7'-10⅞	16'-11⅜
	7'	19'-3⅝	9'-0¼	7'-0⅜	19'-2¾	9'-0⅝	5'-1¾	8'-11½	19'-2½
	8'	21'-9⅞	7'-11½	7'-11⅜	21'-9¼	7'-11¾	5'-10	10'-1⅜	21'-8¼
	9'	24'-2½	7'-9⅜	8'-9¾	24'-2½	7'-9⅝	6'-5⅞	11'-2¼	23'-11⅞
	10'	26'-7	7'-7¼	9'-8⅛	26'-7¾	7'-7½	7'-1⅝	12'-3⅛	26'-3½
12'	8'	21'-9⅞	10'-3½	7'-11⅜	21'-9¼	10'-3⅞	5'-10	10'-1⅜	21'-8¼
	9'	24'-2½	10'-1	8'-9¾	24'-2½	10'-1⅞	6'-5⅞	11'-2¼	23'-11⅞
	10'	26'-7	9'-11¼	9'-8⅛	26'-7¾	9'-11⅝	7'-1⅝	12'-3⅛	26'-3½
	11'	28'-11½	9'-9⅛	10'-6½	29'-0⅞	9'-9½	7'-9½	13'-4	28'-7⅛
	12'	31'-4	9'-7	11'-4⅞	31'-6⅛	9'-7⅜	8'-5⅜	14'-4⅞	30'-10¾

Span	Hgt.	10° Skew A	10° Skew B	10° Skew C	10° Skew D	10° Skew E	15° Skew A	15° Skew B	15° Skew C	15° Skew D	15° Skew E
6'	3'	10'-1¼	4'-9⅛	1'-9⅜	5'-8¼	9'-10⅛	10'-1⅛	4'-10⅛	10⅝"	6'-11	9'-10½
	4'	12'-6⅞	4'-9⅛	2'-2⅝	6'-11¼	12'-0⅛	12'-1	4'-10⅛	1'-0⅝	8'-4⅛	11'-11
	5'	14'-6½	4'-9⅛	2'-6¾	8'-5¼	14'-7¼	14'-6⅞	4'-10⅛	1'-3¼	9'-9⅜	13'-11⅝
	6'	17'-0	4'-9⅛	3'-0	9'-8¼	16'-9¼	17'-0¾	4'-10⅛	1'-5⅞	11'-6	16'-5⅛
	7'	19'-5⅝	4'-9⅛	3'-5⅛	10'-11¼	18'-11¼	19'-6⅝	4'-10⅛	1'-8½	12'-11¼	18'-5⅝
8'	3'	10'-1¼	6'-11½	1'-9⅜	5'-8¼	9'-10⅛	10'-1⅛	7'-1⅛	10⅝"	6'-11	9'-10½
	4'	12'-6⅞	6'-11½	2'-2⅝	6'-11¼	12'-0⅛	12'-1	7'-1⅛	1'-0⅝	8'-4⅛	11'-11
	5'	14'-6½	6'-11½	2'-6¾	8'-5¼	14'-7¼	14'-6⅞	7'-1⅛	1'-3¼	9'-9⅜	13'-11⅝
	6'	17'-0	6'-11½	3'-0	9'-8¼	16'-9¼	17'-0¾	7'-1⅛	1'-5⅞	11'-6	16'-5⅛
	7'	19'-5⅝	6'-11½	3'-5⅛	10'-11¼	18'-11¼	19'-6⅝	7'-1⅛	1'-8½	12'-11¼	18'-5⅝
	8'	22'-0⅛	5'-10½	3'-10⅝	12'-3⅞	21'-4¼	21'-7⅛	5'-11¾	1'-10⅝	14'-6⅞	20'-9⅝
10'	3'	10'-1¼	9'-1⅞	1'-9⅜	5'-8¼	9'-10⅛	10'-1⅛	9'-4	10⅝"	6'-11	9'-10½
	4'	12'-6⅞	9'-1⅞	2'-2⅝	6'-11¼	12'-0⅛	12'-1	9'-4	1'-0⅝	8'-4⅛	11'-11
	5'	14'-6½	9'-1⅞	2'-6¾	8'-5¼	14'-7¼	14'-6⅞	9'-4	1'-3¼	9'-9⅜	13'-11⅝
	6'	17'-0	9'-1⅞	3'-0	9'-8¼	16'-9¼	17'-0¾	9'-4	1'-5⅞	11'-6	16'-5⅛
	7'	19'-5⅝	9'-1⅞	3'-5⅛	10'-11¼	18'-11¼	19'-6⅝	9'-4	1'-8½	12'-11¼	18'-5⅝
	8'	22'-0⅛	8'-0⅞	3'-10⅝	12'-3⅞	21'-4¼	21'-7⅛	8'-2⅝	1'-10⅝	14'-6⅞	20'-9⅝
	9'	24'-0	7'-10¾	4'-2¾	13'-7¼	23'-6¾	24'-1⅛	8'-0⅜	2'-1¼	16'-3⅞	23'-3¾
	10'	26'-5¾	7'-8½	4'-8	14'-10½	25'-9⅛	26'-7	7'-10¾	2'-3⅞	17'-9½	25'-4⅞
12'	8'	22'-0⅛	10'-5¼	3'-10⅝	12'-3⅞	21'-4¼	21'-7⅛	10'-7⅝	1'-10⅝	14'-6⅞	20'-9⅝
	9'	24'-0	10'-3⅛	4'-2¾	13'-7¼	23'-6¾	24'-1⅛	10'-5⅜	2'-1¼	16'-3⅞	23'-3¾
	10'	26'-5¾	10'-1	4'-8	14'-10½	25'-9⅛	26'-7	10'-3⅛	2'-3⅞	17'-9½	25'-4⅞
	11'	28'-11¾	9'-10¾	5'-1¼	16'-1¾	27'-11⅝	29'-1	10'-0⅛	2'-6½	19'-3⅛	27'-6
	12'	31'-5⅛	9'-8⅝	5'-6½	17'-8⅛	30'-7⅜	31'-1	9'-10¾	2'-8⅝	21'-0⅛	30'-0⅛

Span	Hgt.	20° Skew A	20° Skew B	20° Skew C	20° Skew D	25° Skew A	25° Skew B	25° Skew C	25° Skew D	30° Skew A	30° Skew B	30° Skew C	30° Skew D
6'	3'	10'-0	4'-11¾	8'-2⅜	9'-9¼	9'-0	5'-2⅝	9'-6½	9'-6½	8'-6	5'-6⅜	10'-11⅜	9'-2¼
	4'	12'-0	4'-11¾	9'-9¾	11'-8¼	11'-0	5'-2⅝	11'-3¾	11'-3¾	10'-6	5'-6⅜	13'-2⅞	11'-1⅜
	5'	14'-6	4'-11¾	11'-8⅞	13'-11⅞	13'-6	5'-2⅝	13'-5¼	13'-5¼	12'-6	5'-6⅜	15'-6½	13'-0½
	6'	17'-0	4'-11¾	13'-4⅛	15'-10⅞	15'-6	5'-2⅝	15'-6⅝	15'-6⅝	14'-6	5'-6⅜	17'-10⅛	14'-11⅝
	7'	19'-6	4'-11¾	15'-3¼	18'-2⅜	17'-6	5'-2⅝	17'-8⅛	17'-8⅛	16'-6	5'-6⅜	20'-1⅝	16'-10¾
8'	3'	10'-0	7'-3⅜	8'-2⅜	9'-9¼	9'-0	7'-7⅜	9'-6½	9'-6½	8'-6	8'-0⅜	10'-11⅜	9'-2¼
	4'	12'-0	7'-3⅜	9'-9¾	11'-8¼	11'-0	7'-7⅜	11'-3¾	11'-3¾	10'-6	8'-0⅜	13'-2⅞	11'-1⅜
	5'	14'-6	7'-3⅜	11'-8⅞	13'-11⅞	13'-6	7'-7⅜	13'-5¼	13'-5¼	12'-6	8'-0⅜	15'-6½	13'-0½
	6'	17'-0	7'-3⅜	13'-4⅛	15'-10⅞	15'-6	7'-7⅜	15'-6⅝	15'-6⅝	14'-6	8'-0⅜	17'-10⅛	14'-11⅝
	7'	19'-6	7'-3⅜	15'-3¼	18'-2⅜	17'-6	7'-7⅜	17'-8⅛	17'-8⅛	16'-6	8'-0⅜	20'-1⅝	16'-10¾
	8'	21'-6	6'-1½	17'-1¾	20'-5¼	20'-0	6'-4⅞	19'-9⅝	19'-9⅝	18'-6	6'-9	22'-10¾	19'-2½
10'	3'	10'-0	9'-7	8'-2⅜	9'-9¼	9'-0	10'-0	9'-6½	9'-6½	8'-6	10'-6⅜	10'-11⅜	9'-2¼
	4'	12'-0	9'-7	9'-9¾	11'-8¼	11'-0	10'-0	11'-3¾	11'-3¾	10'-6	10'-6⅜	13'-2⅞	11'-1⅜
	5'	14'-6	9'-7	11'-8⅞	13'-11⅞	13'-6	10'-0	13'-5¼	13'-5¼	12'-6	10'-6⅜	15'-6½	13'-0½
	6'	17'-0	9'-7	13'-4⅛	15'-10⅞	15'-6	10'-0	15'-6⅝	15'-6⅝	14'-6	10'-6⅜	17'-10⅛	14'-11⅝
	7'	19'-6	9'-7	15'-3¼	18'-2⅜	17'-6	10'-0	17'-8⅛	17'-8⅛	16'-6	10'-6⅜	20'-1⅝	16'-10¾
	8'	21'-6	8'-5¼	17'-1¾	20'-5¼	20'-0	8'-9½	19'-9⅝	19'-9⅝	18'-6	9'-3	22'-10¾	19'-2½
	9'	24'-0	8'-2⅞	19'-1½	22'-9½	22'-0	8'-7⅛	21'-11¾	21'-11¾	20'-6	9'-0½	25'-3¼	21'-2⅜
	10'	26'-6	8'-0⅝	20'-9¼	24'-9⅛	24'-0	8'-4¾	24'-1⅞	24'-1⅞	22'-6	8'-9⅞	27'-7¾	23'-2⅜
12'	8'	21'-6	10'-11	17'-1¾	20'-5¼	20'-0	11'-4⅜	19'-9⅝	19'-9⅝	18'-6	11'-11⅜	22'-10¾	19'-2½
	9'	24'-0	10'-8¾	19'-1½	22'-9½	22'-0	11'-2	21'-11¾	21'-11¾	20'-6	11'-8⅞	25'-3¼	21'-2⅜
	10'	26'-6	10'-6⅜	20'-9¼	24'-9⅛	24'-0	10'-11⅝	24'-1⅞	24'-1⅞	22'-6	11'-6¼	27'-7¾	23'-2⅜
	11'	29'-0	10'-4⅛	20'-9	27'-1¼	26'-6	10'-9⅛	26'-4⅛	26'-4⅛	24'-6	11'-3¾	30'-0⅛	25'-2¼
	12'	31'-0	10'-1¾	24'-4¾	29'-0⅞	28'-6	10'-6¾	28'-2	28'-2	26'-6	11'-1⅛	32'-4⅝	27'-2⅛

Span	Hgt.	35° Skew A	35° Skew B	35° Skew C	35° Skew D	40° Skew A	40° Skew B	40° Skew C	40° Skew D	45° Skew A	45° Skew B	45° Skew C	45° Skew D
6'	3'	7'-6	5'-10⅞	12'-4⅞	8'-8¼	7'-0	6'-4½	14'-4½	8'-3⅝	7'-0	6'-11⅛	16'-6⅛	7'-8⅜
	4'	9'-6	5'-10⅞	14'-10⅜	10'-4⅞	9'-0	6'-4½	16'-11⅝	9'-9⅝	8'-6	6'-11⅛	19'-8⅛	9'-2⅛
	5'	11'-6	5'-10⅞	17'-8¾	12'-5	10'-6	6'-4½	20'-0	11'-6⅝	10'-0	6'-11⅛	22'-10¼	10'-7⅞
	6'	13'-6	5'-10⅞	20'-2¼	14'-1⅝	12'-6	6'-4½	23'-0⅜	13'-3⅝	12'-0	6'-11⅛	26'-0¼	12'-1⅝
	7'	15'-0	5'-10⅞	22'-7¾	15'-10¼	14'-0	6'-4½	26'-0¾	15'-0⅝	13'-6	6'-11⅛	29'-2⅜	13'-7⅜
8'	3'	7'-6	8'-6⅝	12'-4⅞	8'-8¼	7'-0	9'-2⅜	14'-4½	8'-3⅝	7'-0	9'-11⅞	16'-6⅛	7'-8⅜
	4'	9'-6	8'-6⅝	14'-10⅜	10'-4⅞	9'-0	9'-2⅜	16'-11⅝	9'-9⅝	8'-6	9'-11⅞	19'-8⅛	9'-2⅛
	5'	11'-6	8'-6⅝	17'-8¾	12'-5	10'-6	9'-2⅜	20'-0	11'-6⅝	10'-0	9'-11⅞	22'-10¼	10'-7⅞
	6'	13'-6	8'-6⅝	20'-2¼	14'-1⅝	12'-6	9'-2⅜	23'-0⅜	13'-3⅝	12'-0	9'-11⅞	26'-0¼	12'-1⅝
	7'	15'-0	8'-6⅝	22'-7¾	15'-10¼	14'-0	9'-2⅜	26'-0¾	15'-0⅝	13'-6	9'-11⅞	29'-2⅜	13'-7⅜
	8'	17'-0	7'-2⅛	26'-1⅛	18'-3¼	16'-0	7'-8⅜	29'-5	16'-11¾	15'-0	8'-3¾	33'-9½	15'-9⅛
10'	3'	7'-6	11'-2⅜	12'-4⅞	8'-8¼	7'-0	12'-0⅜	14'-4½	8'-3⅝	7'-0	13'-0¾	16'-6⅛	7'-8⅜
	4'	9'-6	11'-2⅜	14'-10⅜	10'-4⅞	9'-0	12'-0⅜	16'-11⅝	9'-9⅝	8'-6	13'-0¾	19'-8⅛	9'-2⅛
	5'	11'-6	11'-2⅜	17'-8¾	12'-5	10'-6	12'-0⅜	20'-0	11'-6⅝	10'-0	13'-0¾	22'-10¼	10'-7⅞
	6'	13'-6	11'-2⅜	20'-2¼	14'-1⅝	12'-6	12'-0⅜	23'-0⅜	13'-3⅝	12'-0	13'-0¾	26'-0¼	12'-1⅝
	7'	15'-0	11'-2⅜	22'-7¾	15'-10¼	14'-0	12'-0⅜	26'-0¾	15'-0⅝	13'-6	13'-0¾	29'-2⅜	13'-7⅜
	8'	17'-0	9'-9⅞	26'-1⅛	18'-3¼	16'-0	10'-6⅜	29'-5	16'-11¾	15'-0	11'-4½	33'-9½	15'-9⅛
	9'	19'-0	9'-7⅛	28'-7¾	20'-0¾	17'-6	10'-3⅜	32'-6⅞	18'-9⅝	17'-0	11'-1⅛	37'-1½	17'-3¾
	10'	20'-6	9'-4⅜	31'-7⅜	22'-1⅝	19'-6	10'-0⅜	35'-8¾	20'-7½	18'-6	10'-9¾	40'-5½	18'-10⅜
12'	8'	17'-0	12'-8⅛	26'-1⅛	18'-3¼	16'-0	13'-6⅞	29'-5	16'-11¾	15'-0	14'-8⅛	33'-9½	15'-9⅛
	9'	19'-0	12'-5⅜	28'-7¾	20'-0¾	17'-6	13'-3⅞	32'-6⅞	18'-9⅝	17'-0	14'-4¾	37'-1½	17'-3¾
	10'	20'-6	12'-2⅝	31'-7⅜	22'-1⅝	19'-6	13'-0⅞	35'-8¾	20'-7½	18'-6	14'-1⅜	40'-5½	18'-10⅜
	11'	22'-6	11'-11⅞	34'-2	23'-11¼	21'-0	12'-9⅞	38'-10⅝	22'-5⅜	20'-0	13'-10	43'-9⅝	20'-5⅛
	12'	24'-6	11'-9⅛	36'-8¾	25'-8⅝	23'-0	12'-6⅞	41'-7¼	24'-0¼	22'-0	13'-6⅝	47'-7	22'-2¼

QUANTITIES

Span	Hgt.	0° Skew Conc. C.Y. 1Bbl.	0° Δc	0° Steel lbs. 1Bbl.	0° Δs	5° Skew Conc. C.Y. 1Bbl.	5° Δc	5° Steel lbs. 1Bbl.	5° Δs	10° Skew Conc. C.Y. 1Bbl.	10° Δc	10° Steel lbs. 1Bbl.	10° Δs	15° Skew Conc. C.Y. 1Bbl.	15° Δc	15° Steel lbs. 1Bbl.	15° Δs
6'	3'	0.41	1.46	46	122	0.42	1.49	48	124	0.42	1.49	48	124	0.45	1.52	52	126
	4'	0.56	1.75	69	143	0.57	1.78	72	145	0.58	1.78	71	146	0.62	1.78	75	146
	5'	0.72	2.04	98	165	0.75	2.07	101	167	0.77	2.07	103	167	0.78	2.07	102	167
	6'	0.97	2.33	132	186	0.98	2.33	133	186	1.02	2.36	137	188	1.07	2.38	141	191
	7'	1.28	2.62	172	208	1.29	2.62	173	208	1.34	2.65	176	210	1.39	2.67	179	212
8'	3'	0.93	1.98	85	158	0.95	2.02	88	161	0.96	2.03	88	161	1.00	2.07	93	164
	4'	1.18	2.36	115	186	1.20	2.40	119	189	1.21	2.42	118	189	1.25	2.40	121	190
	5'	1.44	2.75	151	214	1.47	2.78	155	217	1.50	2.78	157	217	1.51	2.78	156	218
	6'	1.78	3.13	192	243	1.79	3.12	193	243	1.84	3.16	198	246	1.90	3.20	202	249
	7'	2.19	3.51	239	271	2.19	3.51	239	271	2.25	3.54	244	274	2.31	3.58	247	277
	8'	2.77	3.91	250	301	2.78	3.91	251	301	2.85	3.95	255	304	2.88	3.95	256	304
10'	3'	1.52	2.54	128	197	1.55	2.59	132	200	1.56	2.60	133	201	1.61	2.65	138	205
	4'	1.87	3.02	166	232	1.90	3.07	171	236	1.91	3.07	170	236	1.95	3.07	174	236
	5'	2.23	3.49	210	267	2.27	3.54	214	271	2.30	3.54	216	271	2.31	3.54	216	271
	6'	2.67	3.97	258	303	2.68	3.97	259	303	2.74	4.01	265	306	2.81	4.06	270	310
	7'	3.18	4.44	313	338	3.19	4.44	313	338	3.25	4.49	319	341	3.33	4.54	323	345
	8'	3.87	4.95	332	376	3.88	4.95	333	376	3.95	5.00	338	379	3.99	4.99	338	379
	9'	4.48	5.43	387	411	4.49	5.43	388	411	4.51	5.43	388	411	4.68	5.52	400	418
	10'	5.15	5.91	447	447	5.16	5.91	447	447	5.18	5.91	446	447	5.36	6.00	458	454
12'	8'	5.01	6.04	414	450	5.02	6.03	415	450	5.10	6.09	420	454	5.14	6.09	421	454
	9'	5.72	6.61	477	493	5.73	6.61	477	493	5.75	6.61	477	493	5.94	6.72	492	501
	10'	6.49	7.19	544	536	6.50	7.19	544	536	6.52	7.18	543	536	6.72	7.29	557	544
	11'	7.33	7.76	616	579	7.33	7.76	615	578	7.35	7.76	614	578	7.56	7.87	626	587
	12'	8.22	8.34	692	621	8.23	8.34	691	621	8.35	8.39	699	625	8.49	8.43	707	628

Span	Hgt.	20° Skew Conc. C.Y. 1Bbl.	20° Δc	20° Steel lbs. 1Bbl.	20° Δs	25° Skew Conc. C.Y. 1Bbl.	25° Δc	25° Steel lbs. 1Bbl.	25° Δs	30° Skew Conc. C.Y. 1Bbl.	30° Δc	30° Steel lbs. 1Bbl.	30° Δs
6'	3'	0.50	1.55	57	128	0.88	1.52	86	128	1.23	1.53	113	129
	4'	0.67	1.81	79	148	1.11	1.78	112	147	1.59	1.81	150	150
	5'	0.97	2.12	112	172	1.41	2.10	150	170	1.97	2.09	194	171
	6'	1.12	2.41	144	193	1.79	2.38	195	191	2.44	2.37	244	191
	7'	1.50	2.73	188	217	2.25	2.66	245	212	2.99	2.65	300	212
8'	3'	1.06	2.11	98	167	1.43	2.07	126	166	1.79	2.09	154	167
	4'	1.31	2.44	127	193	1.75	2.41	159	191	2.24	2.46	198	195
	5'	1.62	2.86	167	224	2.15	2.83	205	221	2.71	2.83	249	222
	6'	1.96	3.24	206	252	2.62	3.19	256	249	3.27	3.19	305	249
	7'	2.44	3.65	258	283	3.17	3.56	314	276	3.92	3.56	368	277
	8'	3.04	4.02	266	310	3.91	3.97	331	307	4.81	3.96	402	307
10'	3'	1.68	2.70	145	206	2.05	2.66	172	206	2.42	2.69	201	209
	4'	2.02	3.12	180	240	2.46	3.08	212	238	2.96	3.14	252	243
	5'	2.44	3.64	228	279	2.96	3.60	266	276	3.53	3.60	310	277
	6'	2.89	4.11	275	314	3.53	4.06	324	310	4.19	4.06	374	311
	7'	3.48	4.63	335	352	4.19	4.52	389	344	4.93	4.52	444	345
	8'	4.16	5.08	351	386	5.02	5.03	415	383	5.93	5.02	486	382
	9'	4.87	5.60	412	425	5.79	5.50	482	417	6.80	5.49	560	417
	10'	5.55	6.08	468	461	6.62	5.97	554	452	7.75	5.96	639	452
12'	8'	5.33	6.20	435	463	6.19	6.14	499	458	7.10	6.14	570	458
	9'	6.15	6.82	505	509	7.05	6.70	573	500	8.07	6.70	651	499
	10'	6.93	7.40	569	552	7.99	7.26	653	541	9.11	7.25	737	541
	11'	7.89	8.02	648	598	9.07	7.89	741	588	10.23	7.81	829	582
	12'	8.72	8.54	717	636	10.02	8.40	818	626	11.45	8.37	927	624

Span	Hgt.	35° Skew Conc. C.Y. 1Bbl.	35° Δc	35° Steel lbs. 1Bbl.	35° Δs	40° Skew Conc. C.Y. 1Bbl.	40° Δc	40° Steel lbs. 1Bbl.	40° Δs	45° skew Conc. C.Y. 1Bbl.	45° Δc	45° Steel lbs. 1Bbl.	45° Δs
6'	3'	1.59	1.51	140	128	1.97	1.54	173	132	2.36	1.62	206	139
	4'	2.00	1.79	181	149	2.45	1.82	217	152	2.96	1.88	260	158
	5'	2.51	2.09	236	171	3.01	2.08	275	172	3.59	2.14	320	177
	6'	3.05	2.37	290	192	3.70	2.39	341	194	4.40	2.44	390	200
	7'	3.65	2.61	349	210	4.47	2.65	412	214	5.30	2.70	463	219
8'	3'	2.14	2.06	180	166	2.54	2.11	215	171	2.96	2.22	251	180
	4'	2.65	2.43	228	193	3.11	2.48	266	198	3.65	2.56	311	205
	5'	3.25	2.83	291	223	3.76	2.82	330	224	4.36	2.90	377	230
	6'	3.89	3.19	351	250	4.55	3.22	403	253	5.27	3.30	454	260
	7'	4.56	3.51	416	274	5.41	3.56	481	279	6.26	3.64	534	285
	8'	5.66	3.95	467	306	6.50	3.98	528	310	7.54	4.06	603	316
10'	3'	2.76	2.65	227	207	3.18	2.72	262	212	3.64	2.86	301	224
	4'	3.36	3.11	282	241	3.85	3.18	321	247	4.41	3.29	368	255
	5'	4.08	3.61	352	278	4.59	3.61	392	279	5.21	3.71	441	287
	6'	4.81	4.07	420	312	5.48	4.11	473	315	6.23	4.21	525	324
	7'	5.57	4.46	491	341	6.43	4.54	557	347	7.31	4.64	612	356
	8'	6.77	5.01	551	382	7.63	5.06	613	386	8.69	5.16	690	394
	9'	7.74	5.48	630	417	8.73	5.49	704	418	10.04	5.67	789	432
	10'	8.81	5.92	723	449	10.05	6.00	806	456	11.34	6.10	889	465
12'	8'	7.94	6.13	635	457	8.82	6.19	698	462	9.91	6.33	776	472
	9'	9.01	6.69	721	499	10.01	6.72	795	501	11.37	6.94	884	518
	10'	10.17	7.22	821	538	11.44	7.32	905	546	12.76	7.46	991	557
	11'	11.44	7.78	919	580	12.78	7.85	1016	585	14.23	7.98	1103	595
	12'	12.77	8.34	1023	622	14.26	8.41	1124	627	16.08	8.16	1245	643

NOTATIONS:

Δc = Apron concrete quantity per additional barrel.

Δs = Apron steel quantity per additional barrel.

NO	DESCRIPTION OF REVISIONS	MADE BY	DATE
1	Revised Quantities	C.H.	6-88
2			
3			
4			

DESIGN
DRAWN
CHECKED

Registered Professional Engineer (Civil) — Certificate No. 9910 — F. DANIEL DAVIS — Date Signed 8-1-88 — Arizona U.S.A.

DESIGN APPROVED: T. D. Davis

APPROVED FOR DISTRIBUTION: T. A. Bryant, II.

ARIZONA
DEPARTMENT OF TRANSPORTATION
HIGHWAYS DIVISION
STANDARD DRAWINGS

OUTLET APRON
DIMENSIONS & QUANTITIES
4 : 1 SLOPE

REVISION 7-88

STANDARD NO. B-06.30

CADD FILENAME= ZFA *51,4*B0630
VIEW NAME= HW4

DIMENSIONS

Span	Hgt.	0° Skew			5° Skew				
		A	B	C	A	B	C	D	E
6'	3'	12'-3 1/8	4'-8 1/4	4'-5 1/2	12'-5 1/2	4'-8 1/2	3'-4 1/8	5'-6 7/8	11'-11 1/2
	4'	15'-0 7/8	4'-8 1/4	5'-5 7/8	15'-4 3/8	4'-8 1/2	4'-1 3/8	7'-0 5/8	15'-1 5/8
	5'	17'-10 3/4	4'-8 1/4	6'-6 1/8	18'-3 1/8	4'-8 1/2	4'-10 7/8	8'-3 7/8	17'-10 1/4
	6'	20'-8 5/8	4'-8 1/4	7'-6 1/2	21'-1 7/8	4'-8 1/2	5'-8	9'-7 1/8	20'-6 7/8
	7'	23'-6 3/8	4'-8 1/4	8'-6 3/4	24'-0 5/8	4'-8 1/2	6'-5 3/8	10'-10 3/4	23'-3 1/2
8'	3'	12'-3 1/8	6'-10 1/4	4'-5 1/2	12'-5 1/2	6'-10 1/2	3'-4 1/8	5'-6 7/8	11'-11 1/2
	4'	15'-0 7/8	6'-10 1/4	5'-5 7/8	15'-4 3/8	6'-10 1/2	4'-1 3/8	7'-0 5/8	15'-1 5/8
	5'	17'-10 3/4	6'-10 1/4	6'-6 1/8	18'-3 1/8	6'-10 1/2	4'-10 7/8	8'-3 7/8	17'-10 1/4
	6'	20'-8 5/8	6'-10 1/4	7'-6 1/2	21'-1 7/8	6'-10 1/2	5'-8	9'-7 1/8	20'-6 7/8
	7'	23'-6 3/8	6'-10 1/4	8'-6 3/4	24'-0 5/8	6'-10 1/2	6'-5 3/8	10'-10 3/4	23'-3 1/2
	8'	27'-0	5'-9 1/2	9'-9 7/8	27'-1	5'-9 5/8	7'-3 1/8	12'-2 3/4	26'-2 5/8
10'	3'	12'-3 1/8	9'-0 1/4	4'-5 1/2	12'-5 1/2	9'-0 5/8	3'-4 1/8	5'-6 7/8	11'-11 1/2
	4'	15'-0 7/8	9'-0 1/4	5'-5 7/8	15'-4 3/8	9'-0 5/8	4'-1 3/8	7'-0 5/8	15'-1 5/8
	5'	17'-10 3/4	9'-0 1/4	6'-6 1/8	18'-3 1/8	9'-0 5/8	4'-10 7/8	8'-3 7/8	17'-10 1/4
	6'	20'-8 5/8	9'-0 1/4	7'-6 1/2	21'-1 7/8	9'-0 5/8	5'-8	9'-7 1/8	20'-6 7/8
	7'	23'-6 3/8	9'-0 1/4	8'-6 3/4	24'-0 5/8	9'-0 5/8	6'-5 3/8	10'-10 3/4	23'-3 1/2
	8'	27'-0	7'-11 1/2	9'-9 7/8	27'-1	7'-11 3/4	7'-3 1/8	12'-2 3/4	26'-2 5/8
12'	8'	27'-0	10'-3 1/2	9'-9 7/8	27'-1	10'-3 7/8	7'-3 1/8	12'-2 3/4	26'-2 5/8

Span	Hgt.	10° Skew					15° Skew				
		A	B	C	D	E	A	B	C	D	E
6'	3'	12'-0 7/8	4'-9 1/8	2'-1 1/2	6'-11 1/4	12'-0 1/8	12'-1	4'-10 1/8	1'-0 5/8	8'-4 1/8	11'-11
	4'	15'-0 3/8	4'-9 1/8	2'-7 3/4	8'-5 1/4	14'-7 1/4	15'-0 7/8	4'-10 1/8	1'-3 7/8	10'-0 3/4	14'-4 1/2
	5'	17'-11 7/8	4'-9 1/8	3'-2 1/8	10'-2 1/4	17'-7 5/8	18'-0 3/4	4'-10 1/8	1'-7	12'-0 7/8	17'-2 7/8
	6'	20'-11 1/4	4'-9 1/8	3'-8 3/8	11'-8 1/4	20'-2 7/8	21'-0 5/8	4'-10 1/8	1'-10 1/8	13'-9 1/2	19'-8 3/8
	7'	23'-10 3/4	4'-9 1/8	4'-2 1/2	13'-2 1/4	22'-10	24'-0 1/2	4'-10 1/8	2'-1 1/4	15'-9 5/8	22'-6 7/8
8'	3'	12'-0 7/8	6'-11 1/2	2'-1 1/2	6'-11 1/4	12'-0 1/8	12'-1	7'-1 1/8	1'-0 5/8	8'-4 1/8	11'-11
	4'	15'-0 3/8	6'-11 1/2	2'-7 3/4	8'-5 1/4	14'-7 1/4	15'-0 7/8	7'-1 1/8	1'-3 7/8	10'-0 3/4	14'-4 1/2
	5'	17'-11 7/8	6'-11 1/2	3'-2 1/8	10'-2 1/4	17'-7 5/8	18'-0 3/4	7'-1 1/8	1'-7	12'-0 7/8	17'-2 7/8
	6'	20'-11 1/4	6'-11 1/2	3'-8 3/8	11'-8 1/4	20'-2 7/8	21'-0 5/8	7'-1 1/8	1'-10 1/8	13'-9 1/2	19'-8 3/8
	7'	23'-10 3/4	6'-11 1/2	4'-2 1/2	13'-2 1/4	22'-10	24'-0 1/2	7'-1 1/8	2'-1 1/4	15'-9 5/8	22'-6 7/8
	8'	26'-11 1/4	5'-10 1/2	4'-9	15'-0 7/8	26'-1 3/8	27'-0 7/8	5'-11 3/4	2'-4 3/8	17'-8 3/4	25'-3 3/4
10'	3'	12'-0 7/8	9'-1 7/8	2'-1 1/2	6'-11 1/4	12'-0 1/8	12'-1	9'-4	1'-0 5/8	8'-4 1/8	11'-11
	4'	15'-0 3/8	9'-1 7/8	2'-7 3/4	8'-5 1/4	14'-7 1/4	15'-0 7/8	9'-4	1'-3 7/8	10'-0 3/4	14'-4 1/2
	5'	17'-11 7/8	9'-1 7/8	3'-2 1/8	10'-2 1/4	17'-7 5/8	18'-0 3/4	9'-4	1'-7	12'-0 7/8	17'-2 7/8
	6'	20'-11 1/4	9'-1 7/8	3'-8 3/8	11'-8 1/4	20'-2 7/8	21'-0 5/8	9'-4	1'-10 1/8	13'-9 1/2	19'-8 3/8
	7'	23'-10 3/4	9'-1 7/8	4'-2 1/2	13'-2 1/4	22'-10	24'-0	9'-4	2'-1 1/4	15'-9 5/8	22'-6 7/8
	8'	26'-11 1/4	8'-0 7/8	4'-9	15'-0 7/8	26'-1 3/8	27'-0 7/8	8'-2 5/8	2'-4 3/8	17'-8 3/4	25'-3 3/4
12'	8'	26'-11 1/4	10'-5 1/4	4'-9	15'-0 7/8	26'-1 3/8	27'-0 7/8	10'-7 5/8	2'-4 3/8	17'-8 3/4	25'-3 3/4

Span	Hgt.	20° Skew				25° Skew			
		A	B	C	D	A	B	C	D
6'	3'	12'-0	4'-11 3/4	9'-5 7/8	11'-3 5/8	11'-0	5'-2 5/8	10'-11 1/2	10'-11 1/2
	4'	15'-0	4'-11 3/4	11'-8 7/8	13'-11 7/8	13'-6	5'-2 5/8	13'-5 1/4	13'-5 1/4
	5'	18'-0	4'-11 3/4	13'-11 7/8	16'-8	16'-0	5'-2 5/8	15'-10 7/8	15'-10 7/8
	6'	21'-0	4'-11 3/4	15'-11	18'-11 5/8	19'-0	5'-2 5/8	18'-4 5/8	18'-4 5/8
	7'	24'-0	4'-11 3/4	18'-2	21' 7 3/4	21'-6	5'-2 5/8	20'-10 3/4	20'-10 3/4
8'	3'	12'-0	7'-3 3/8	9'-5 7/8	11'-3 5/8	11'-0	7'-7 3/8	10'-11 1/2	10'-11 1/2
	4'	15'-0	7'-3 3/8	11'-8 7/8	13'-11 7/8	13'-6	7'-7 3/8	13'-5 1/4	13'-5 1/4
	5'	18'-0	7'-3 3/8	13'-11 7/8	16'-8	16'-0	7'-7 3/8	15'-10 7/8	15'-10 7/8
	6'	21'-0	7'-3 3/8	15'-11	18'-11 5/8	19'-0	7'-7 3/8	18'-4 5/8	18'-4 5/8
	7'	24'-0	7'-3 3/8	18'-2	21'-7 3/4	21'-6	7'-7 3/8	20'-10 3/4	20'-10 3/4
	8'	27'-0	6'-1 1/2	20'-8 1/4	24' 7 3/4	24'-0	6'-4 7/8	23'-8 1/4	23'-8 1/4
10'	3'	12'-0	9'-7	9'-5 7/8	11'-3 5/8	11'-0	10'-0	10'-11 1/2	10'-11 1/2
	4'	15'-0	9'-7	11'-8 7/8	13'-11 7/8	13'-6	10'-0	13'-5 1/4	13'-5 1/4
	5'	18'-0	9'-7	13'-11 7/8	16'-8	16'-0	10'-0	15'-10 7/8	15'-10 7/8
	6'	21'-0	9'-7	15'-11	18'-11 5/8	19'-0	10'-0	18'-4 5/8	18'-4 5/8
	7'	24'-0	9'-7	18'-2	21'-7 3/4	21-6	10'-0	20'-10 3/4	20'-10 3/4
	8'	27'-0	8'-5 1/4	20'-8 1/4	24'-7 3/4	24'-0	8'-9 1/2	23'-8 1/4	23'-8 1/4
12'	8'	27'-0	10'-11	20'-8 1/4	24'-7 3/4	24'-0	11'-4 3/8	23'-8 1/4	23'-8 1/4

Span	Hgt.	30° Skew				35° Skew			
		A	B	C	D	A	B	C	D
6'	3'	10'-0	5'-6 3/8	12'-5 3/4	10'-5 5/8	9'-0	5'-10 7/8	14'-5 3/8	10'-1 3/8
	4'	12'-6	5'-6 3/8	15'-6 1/2	13'-0 1/2	11'-6	5'-10 7/8	17'-3 7/8	12'-1 1/2
	5'	14'-6	5'-6 3/8	18'-2 5/8	15'-3 1/2	13'-6	5'-10 7/8	20'-7 1/8	14'-5
	6'	17'-0	5'-6 3/8	20'-10 7/8	17'-6 1/2	15'-6	5'-10 7/8	23'-5 1/2	16'-5 1/8
	7'	19'-6	5'-6 3/8	23'-7	19'-9 1/2	18'-0	5'-10 7/8	26'-8 7/8	18'-8 5/8
8'	3'	10'-0	8'-0 3/8	12'-5 3/4	10'-5 5/8	9'-0	8'-6 5/8	14'-5 3/8	10'-1 3/8
	4'	12'-6	8'-0 3/8	15'-6 1/2	13'-0 1/2	11'-6	8'-6 5/8	17'-3 7/8	12'-1 1/2
	5'	14'-6	8'-0 3/8	18'-2 5/8	15'-3 1/2	13'-6	8'-6 5/8	20'-7 1/8	14'-5
	6'	17'-0	8'-0 3/8	20'-10 7/8	17'-6 1/2	15'-6	8'-6 5/8	23'-5 1/2	16'-5 1/8
	7'	19'-6	8'-0 3/8	23'-7	19'-9 1/2	18'-0	8'-6 5/8	26'-8 7/8	18'-8 5/8
	8'	22'-0	6'-9	26'-8 5/8	22'-5 1/8	20'-0	7'-2 1/8	30'-2 1/4	21'-1 5/8
10'	3'	10'-0	10'-6 3/8	12'-5 3/4	10'-5 5/8	9'-0	11'-2 3/8	14'-5 3/8	10'-1 3/8
	4'	12'-6	10'-6 3/8	15'-6 1/2	13'-0 1/2	11'-6	11'-2 3/8	17'-3 7/8	12'-1 1/2
	5'	14'-6	10'-6 3/8	18'-2 5/8	15'-3 1/2	13'-6	11'-2 3/8	20'-7 1/8	14'-5
	6'	17'-0	10'-6 3/8	20'-10 7/8	17'-6 1/2	15'-6	11'-2 3/8	23'-5 1/2	16'-5 1/8
	7'	19'-6	10'-6 3/8	23'-7	19'-9 1/2	18'-0	11'-2 3/8	26'-8 7/8	18'-8 5/8
	8'	22'-0	9'-3	26'-8 5/8	22'-5 1/8	20'-0	9'-9 7/8	30'-2 1/4	21'-1 5/8
12'	8'	22'-0	11'-11 3/4	26'-8 5/8	22'-5 1/8	20'-0	12'-8 1/8	30'-2 1/4	21'-1 5/8

Span	Hgt.	40° Skew				45° Skew			
		A	B	C	D	A	B	C	D
6'	3'	8'-6	6'-4 1/2	16'-1 1/4	9'-3 5/8	8'-0	6'-11 1/8	18'-3 7/8	8'-6 1/2
	4'	10'-6	6'-4 1/2	19'-6 7/8	11'-3 5/8	10'-0	6'-11 1/8	21'-11 3/8	10'-2 3/4
	5'	12'-6	6'-4 1/2	23'-0 3/8	13'-3 5/8	12'-0	6'-11 1/8	25'-6 7/8	11'-11 1/8
	6'	14'-6	6'-4 1/2	26'-6	15'-3 5/8	13'-6	6'-11 1/8	29'-7 3/4	13'-9 7/8
	7'	16'-6	6'-4 1/2	29'-11 1/2	17'-3 5/8	15'-6	6'-11 1/8	33'-3 3/8	15'-6 1/4
8'	3'	8'-6	9'-2 3/8	16'-1 1/4	9'-3 5/8	8'-0	9'-11 7/8	18'-3 7/8	8'-6 1/2
	4'	10'-6	9'-2 3/8	19'-6 7/8	11'-3 5/8	10'-0	9'-11 7/8	21'-11 3/8	10'-2 3/4
	5'	12'-6	9'-2 3/8	23'-0 3/8	13'-3 5/8	12'-0	9'-11 7/8	25'-6 7/8	11'-11 1/8
	6'	14'-6	9'-2 3/8	26'-6	15'-3 5/8	13'-6	9'-11 7/8	29'-7 3/4	13'-9 7/8
	7'	16'-6	9'-2 3/8	29'-11 1/2	17'-3 5/8	15'-6	9'-11 7/8	33'-3 3/8	15'-6 1/4
	8'	18'-6	7'-8 3/8	33'-8 7/8	19'-5 3/4	17'-6	8'-3 3/4	37'-10 1/2	17'-7 7/8
10'	3'	8'-6	12'-0 3/8	16'-1 1/4	9'-3 5/8	8'-0	13'-0 3/4	18'-3 7/8	8'-6 1/2
	4'	10'-6	12'-0 3/8	19'-6 7/8	11'-3 5/8	10'-0	13'-0 3/4	21'-11 3/8	10'-2 3/4
	5'	12'-6	12'-0 3/8	23'-0 3/8	13'-3 5/8	12'-0	13'-0 3/4	25'-6 7/8	11'-11 1/8
	6'	14'-6	12'-0 3/8	26'-6	15'-3 5/8	13'-6	13'-0 3/4	29'-7 3/4	13'-9 7/8
	7'	16'-6	12'-0 3/8	29'-11 1/2	17'-3 5/8	15'-6	13'-0 3/4	33'-3 3/8	15'-6 1/4
	8'	18'-6	10'-6 3/8	33'-8 7/8	19'-5 3/4	17'-6	11'-4 1/2	37'-10 1/2	17'-7 7/8
12'	8'	18'-6	13'-6 7/8	33'-8 7/8	19'-5 3/4	17'-6	14'-8 1/8	37'-10 1/2	17'-7 7/8

QUANTITIES

Span	Hgt.	0° Skew				5° Skew				10° Skew			
		Conc. C.Y.		Steel lbs.		Conc. C.Y.		Steel lbs.		Conc. C.Y.		Steel lbs.	
		1Bbl.	Δc	1Bbl.	Δs	1Bbl.	Δc	1Bbl.	Δs	1Bbl.	Δc	1Bbl.	Δs
6'	3'	0.47	1.75	69	143	0.47	1.75	69	143	0.49	1.75	70	143
	4'	0.73	2.10	104	169	0.75	2.13	108	171	0.75	2.10	105	169
	5'	1.04	2.45	147	195	1.07	2.47	151	197	1.09	2.47	152	197
	6'	1.46	2.79	199	221	1.50	2.82	203	223	1.52	2.82	203	223
	7'	1.98	3.14	258	247	2.03	3.17	262	249	2.05	3.17	261	249
8'	3'	1.09	2.36	115	186	1.09	2.37	114	186	1.11	2.37	116	186
	4'	1.47	2.82	159	220	1.50	2.86	163	223	1.48	2.82	159	220
	5'	1.89	3.28	210	254	1.93	3.32	215	257	1.95	3.31	216	257
	6'	2.42	3.73	270	288	2.47	3.77	274	291	2.49	3.77	274	291
	7'	3.06	4.19	337	322	3.12	4.23	342	325	3.13	4.23	341	325
	8'	4.05	4.75	378	364	3.99	4.71	370	361	4.07	4.75	377	363
10'	3'	1.78	3.02	166	232	1.78	3.02	166	232	1.80	3.02	168	232
	4'	2.28	3.59	219	274	2.32	3.64	224	278	2.29	3.59	219	275
	5'	2.82	4.16	280	317	2.87	4.21	285	320	2.89	4.20	286	320
	6'	3.47	4.73	348	359	3.53	4.77	354	363	3.55	4.77	354	363
	7'	4.23	5.30	425	401	4.30	5.34	430	405	4.31	5.34	429	405
	8'	5.37	6.00	477	453	5.29	5.95	468	450	5.39	5.99	475	453
	9'	6.29	6.57	559	496	6.30	6.57	558	496	6.32	6.57	555	496
	10'	7.31	7.15	647	539	7.32	7.15	646	539	7.33	7.14	641	539
12'	8'	6.73	7.29	576	543	6.64	7.23	566	539	6.75	7.28	574	543

Span	Hgt.	15° Skew				20° Skew				25° Skew			
		Conc. C.Y.		Steel lbs.		Conc. C.Y.		Steel lbs.		Conc. C.Y.		Steel lbs.	
		1Bbl.	Δc	1Bbl.	Δs	1Bbl.	Δc	1Bbl.	Δs	1Bbl.	Δc	1Bbl.	Δs
6'	3'	0.53	1.78	75	146	0.54	1.78	74	146	0.98	1.76	106	145
	4'	0.79	2.13	108	172	0.84	2.15	111	174	1.38	2.10	150	170
	5'	1.15	2.50	156	199	1.20	2.53	158	202	1.83	2.43	203	195
	6'	1.57	2.85	205	225	1.63	2.87	205	228	2.42	2.81	265	223
	7'	2.17	3.22	269	253	2.24	3.24	268	255	3.14	3.15	335	248
8'	3'	1.16	2.40	121	190	1.18	2.41	121	190	1.61	2.38	152	188
	4'	1.54	2.86	163	223	1.60	2.90	167	227	2.12	2.83	205	221
	5'	2.01	3.35	220	260	2.08	3.39	223	263	2.68	3.27	266	255
	6'	2.55	3.81	277	294	2.62	3.84	278	297	3.39	3.76	337	291
	7'	3.27	4.30	351	330	3.35	4.33	350	333	4.23	4.20	415	324
	8'	4.16	4.78	377	366	4.33	4.85	385	372	5.27	4.68	459	359
10'	3'	1.86	3.07	174	236	1.88	3.08	173	237	2.31	3.04	205	235
	4'	2.36	3.64	225	279	2.43	3.69	230	283	2.93	3.60	266	276
	5'	2.96	4.25	291	324	3.04	4.30	295	328	3.61	4.15	335	317
	6'	3.63	4.82	357	366	3.71	4.87	359	370	4.46	4.76	416	363
	7'	4.47	5.43	441	412	4.56	5.48	441	416	5.41	5.32	503	404
	8'	5.49	6.04	477	457	5.68	6.12	486	464	6.57	5.91	557	448
	9'	6.51	6.66	566	503	6.72	6.74	573	510	7.67	6.47	650	490
	10'	7.54	7.23	650	546	7.79	7.31	655	552	9.01	7.09	754	536
12'	8'	6.86	7.34	576	547	7.07	7.45	587	556	7.93	7.20	654	537

Span	Hgt.	30° Skew				35° Skew				40° Skew				45° Skew			
		Conc. C.Y.		Steel lbs.		Conc. C.Y.		Steel lbs.		Conc. C.Y.		Steel lbs.		Conc. C.Y.		Steel lbs.	
		1Bbl.	Δc	1Bbl.	Δs	1Bbl.	Δc	1Bbl.	Δs	1Bbl.	Δc	1Bbl.	Δs	1Bbl.	Δc	1Bbl.	Δs
6'	3'	1.40	1.73	137	144	1.85	1.73	173	144	2.23	1.74	202	147	2.65	1.78	237	151
	4'	1.94	2.09	194	171	2.41	2.07	228	170	2.91	2.06	267	170	3.42	2.10	304	175
	5'	2.48	2.40	252	193	3.10	2.39	299	194	3.67	2.39	341	194	4.29	2.42	381	198
	6'	3.14	2.73	320	218	3.85	2.69	369	216	4.62	2.71	424	218	5.36	2.72	473	221
	7'	4.02	3.07	396	243	4.92	3.06	461	243	5.72	3.03	518	242	6.55	3.04	568	244
8'	3'	2.02	2.35	183	187	2.48	2.35	220	188	2.86	2.38	249	190	3.31	2.43	285	195
	4'	2.68	2.83	249	222	3.15	2.80	282	221	3.66	2.80	321	221	4.18	2.85	360	227
	5'	3.32	3.22	314	252	3.94	3.22	361	252	4.52	3.22	403	253	5.15	3.28	444	258
	6'	4.10	3.67	390	285	4.79	3.62	439	282	5.57	3.64	495	285	6.32	3.67	544	287
	7'	5.09	4.11	474	318	5.98	4.09	539	317	6.78	4.07	596	316	7.61	4.09	647	319
	8'	6.21	4.59	528	353	7.18	4.53	598	349	8.12	4.51	661	349	9.19	4.56	728	354
10'	3'	2.72	3.01	235	233	3.17	3.02	272	234	3.57	3.05	302	237	4.04	3.13	339	243
	4'	3.50	3.60	310	277	3.97	3.57	343	275	4.48	3.58	382	276	5.02	3.65	423	283
	5'	4.24	4.10	383	314	4.87	4.10	430	314	5.45	4.11	473	315	6.11	4.18	516	322
	6'	5.14	4.65	468	355	5.83	4.60	516	351	6.62	4.64	573	355	7.38	4.67	623	358
	7'	6.25	5.21	561	396	7.14	5.19	626	395	7.94	5.16	682	394	8.79	5.20	734	397
	8'	7.49	5.81	624	441	8.45	5.73	693	436	9.39	5.71	756	435	10.48	5.79	825	441
	9'	8.88	6.41	737	485	9.97	6.33	813	480	10.90	6.25	875	475	12.22	6.36	960	483
	10'	10.17	6.91	842	522	11.36	6.84	924	518	12.66	6.86	1009	520	13.96	6.90	1090	523
12'	8'	8.82	7.08	720	528	9.77	7.00	788	522	10.72	6.98	851	521	11.83	7.08	921	528

NOTATIONS:

Δc = Apron concrete quantity per additional barrel.

Δs = Apron steel quantity per additional barrel.

NO	DESCRIPTION OF REVISIONS	MADE BY	DATE
1	Revised Quantities	C.H.	6-88
2			
3			
4			

DESIGN
DRAWN
CHECKED

Registered Professional Engineer (Civil) Certificate No. 9910 F. DANIEL DAVIS Date signed 8-1-88 Arizona U.S.A.

DESIGN APPROVED T. D. Davis

APPROVED FOR DISTRIBUTION T. A. Bryant, II.

ARIZONA
DEPARTMENT OF TRANSPORTATION
HIGHWAYS DIVISION
STANDARD DRAWINGS

OUTLET APRON
DIMENSIONS & QUANTITIES
6 : 1 SLOPE

REVISION 7-88

STANDARD NO. B-06.40

CADD FILENAME= ZFA
VIEW NAME=

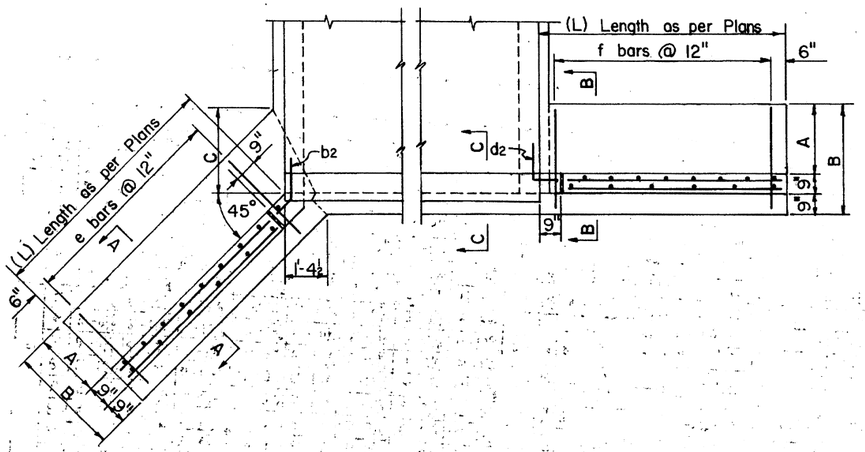

TYPE A WING

TYPE B WING

HEADWALL PLAN

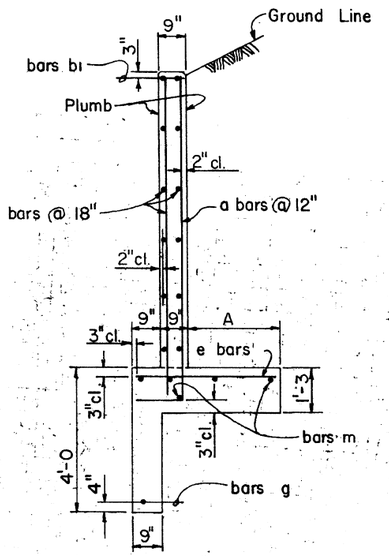

SECTION A-A

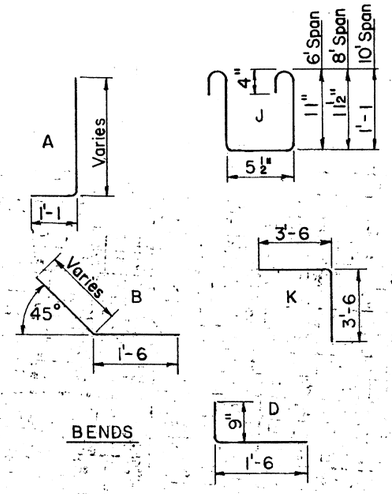

BENDS

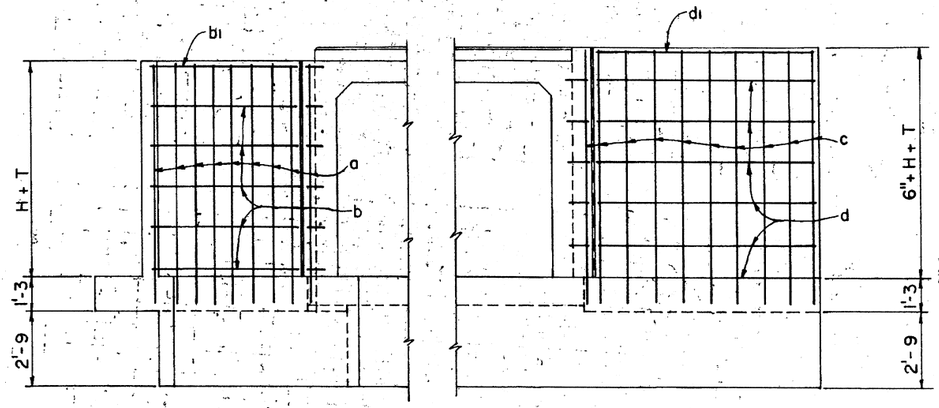

TYPE A WING

TYPE B WING

ELEVATION (Back Face Reinf.)

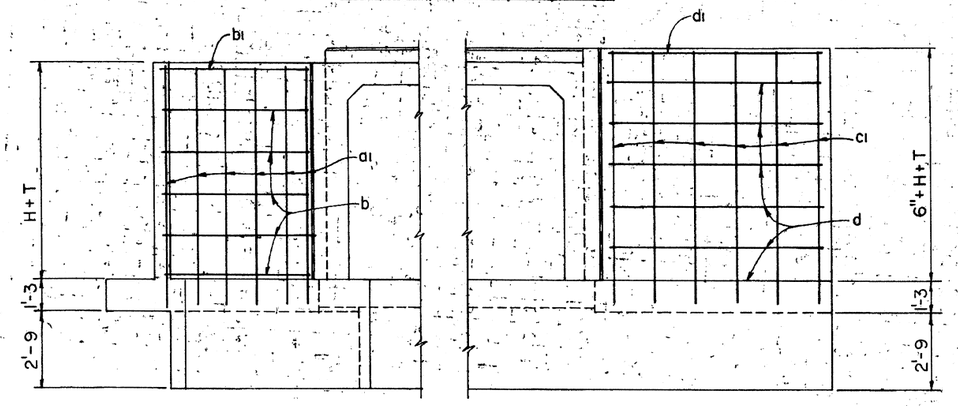

TYPE A WING

TYPE B WING

ELEVATION (Front Face Reinf.)

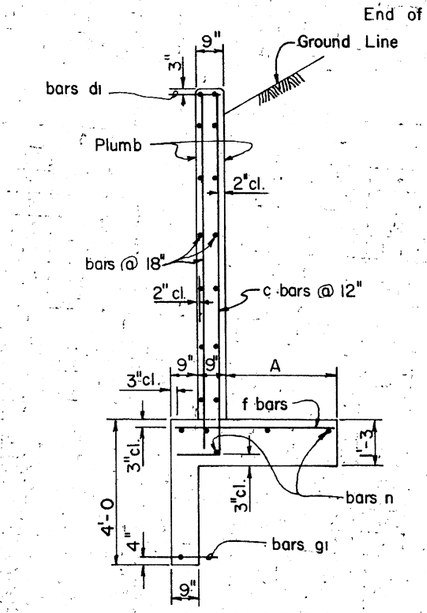

SECTION B-B

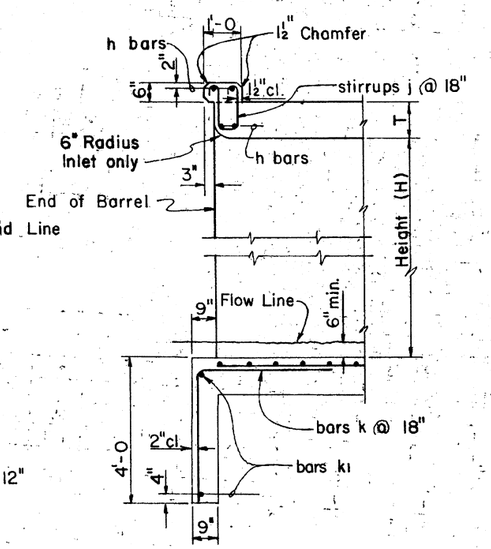

SECTION C-C

DIMENSIONS

Height of Opening	A	B	C
3'	1'-6	3'-0	1'-9
4'	2'-0	3'-6	2'-6
5'	2'-6	4'-0	3'-2
6'	3'-0	4'-6	3'-11
7'	3'-3	4'-9	4'-3

WINGS STEEL LIST (L=H+2)

Mark	Bend	3' Height			4' Height			5' Height			6' Height			7' Height		
		No.	Size	Lgth.	No.	Size	Lgth.	No.	Size	Lgth.	No.	Size	Lgth.	No.	Size	Lgth.
TYPE A WING																
a	A	12	#5	5'-6	14	#5	6'-6	16	#5	7'-6	18	#6	8'-6	20	#7	9'-6
a1	str.	8	#4	4'-6	8	#4	5'-6	8	#4	6'-6	10	#4	7'-6	10	#4	8'-6
b	⌐	8	✓	4'-0	12	✓	5'-0	12	✓	6'-0	16	✓	7'-0	20	✓	8'-0
b1	⌐	4	#6	4'-0	4	#6	5'-0	4	#6	6'-0	4	#6	7'-0	4	#6	8'-0
b2	B	6	#4	2'-3	8	#4	2'-3	8	#4	2'-3	10	#4	2'-3	12	#4	2'-3
e	str.	12	#5	2'-6	14	#5	3'-0	16	#5	3'-6	18	#5	4'-0	20	#5	4'-3
g	B	2	#4	6'-9	2	#4	7'-9	2	#4	8'-9	2	#4	9'-9	2	#4	10'-9
m	str.	8	✓	5'-0	8	✓	6'-0	10	✓	7'-0	10	✓	8'-0	10	✓	9'-0
TYPE B WING																
c	A	12	#5	6'-0	14	#5	7'-0	16	#5	8'-0	18	#6	9'-0	20	#7	10'-0
c1	str.	8	#4	5'-0	8	#4	6'-0	8	#4	7'-0	10	#4	8'-0	10	#4	9'-0
d	⌐	8	✓	4'-0	12	✓	5'-0	12	✓	6'-0	16	✓	7'-0	20	✓	8'-0
d1	⌐	4	#6	4'-0	4	#6	5'-0	4	#6	6'-0	4	#6	7'-0	4	#6	8'-0
d2	D	6	#4	2'-3	8	#4	2'-3	8	#4	2'-3	10	#4	2'-3	12	#4	2'-3
f	str.	10	#5	2'-6	12	#5	3'-0	14	#5	3'-6	16	#5	4'-0	18	#5	4'-3
g1	⌐	2	#4	6'-3	2	#4	7'-3	2	#4	8'-3	2	#4	9'-3	2	#4	10'-3
n	⌐	8	✓	5'-0	8	✓	6'-0	10	✓	7'-0	10	✓	8'-0	10	✓	9'-0

CURB & CUT-OFF WALL STEEL LIST

Mark	Bend	Size	6' Spans				8' Spans				10' Spans			
			1 Barrel		○	◇	1 Barrel		○	◇	1 Barrel		○	◇
			No.	Lgth.	No.	Lgth.	No.	Lgth.	No.	Lgth.	No.	Lgth.	No.	Lgth.
TYPE A WING														
h	str.	#6	4	7'-0		6'-8	4	9'-0		8'-9	4	11'-3		10'-10
j	J	#4	6	3'-6	4		7	3'-6	6		8	3'-9	7	
k	K	✓	4	7'-0	4		5	7'-0	6		6	7'-0	7	
k1	str.	✓	2	4'-6		6'-8	2	6'-9		8'-9	2	9'-0		10'-10
TYPE B WING														
h	str.	#6	4	7'-0		6'-8	4	9'-0		8'-9	4	11'-3		10'-10
j	J	#4	6	3'-6	4		7	3'-6	6		9	3'-9	7	
k	K	✓	5	7'-0	4		7	7'-0	6		9	7'-0	7	
k1	str.	✓	2	7'-3		6'-8	2	9'-3		8'-9	2	11'-6		10'-10

○ Additional number of bars per each extra barrel.

◇ Additional length of bars per each extra barrel.

APPROXIMATE HEADWALL QUANTITIES *

Span	Height	Hdwl. Type A Wings				Hdwl. Type B Wings			
		For L=H+2'		Per each Add. Ft		For L=H+2'		Per each Add. Ft.	
		Conc.	Steel	Conc.	Steel	Conc.	Steel	Conc.	Steel
6'	3'	4.18	297	.3146	19	4.32	308	.3310	20
	4'	5.52	375	.3655	23	5.60	382	.3819	23
	5'	7.07	456	.4164	25	7.07	467	.4329	26
	6'	8.86	636	.4673	33	8.75	652	.4838	34
	7'	10.58	864	.5067	41	10.43	886	.5231	43
8'	3'	4.47	319	.3157	19	4.61	336	.3322	20
	4'	5.80	397	.3666	23	5.88	409	.3831	23
	5'	7.35	477	.4176	25	7.37	494	.4340	26
	6'	9.14	658	.4685	33	9.04	679	.4849	34
	7'	10.88	886	.5090	41	10.75	913	.5255	43
10'	3'	4.81	344	.3180	19	4.94	368	.3345	20
	4'	6.13	423	.3640	23	6.21	441	.3854	23
	5'	7.66	503	.4210	25	7.69	527	.4375	26
	6'	9.46	683	.4731	33	9.39	712	.4896	34
	7'	11.19	911	.5125	41	11.09	946	.5290	43

* Includes curb and cut-off wall quantities for a single barrel.

CURB & CUT-OFF WALL QUANTITIES PER EACH ADDITIONAL BARREL

6' Spans		8' Spans		10' Spans	
Conc.	Steel	Conc.	Steel	Conc.	Steel
.859	76	1.114	103	1.370	130

NOTE:

See B-01.10 for general notes and miscellaneous details.

DESIGN		DRAWN		CHECKED		NO.	DESCRIPTION OF REVISIONS	MADE BY	DATE
						1	Curb height now 6"	JTW	7-76
						2			
						3			

DHY	8-72
APJ	9-72
NAB	9-72

DESIGN APPROVED: R.C. Buechler

APPROVED FOR DISTRIBUTION: E. D. Stenzel

ARIZONA
DEPARTMENT OF TRANSPORTATION
HIGHWAYS DIVISION
STANDARD DRAWINGS

INLET OR OUTLET
LEVEL WINGS,
HEIGHT 3' TO 7'

REVISION

STANDARD NO. B-08.10

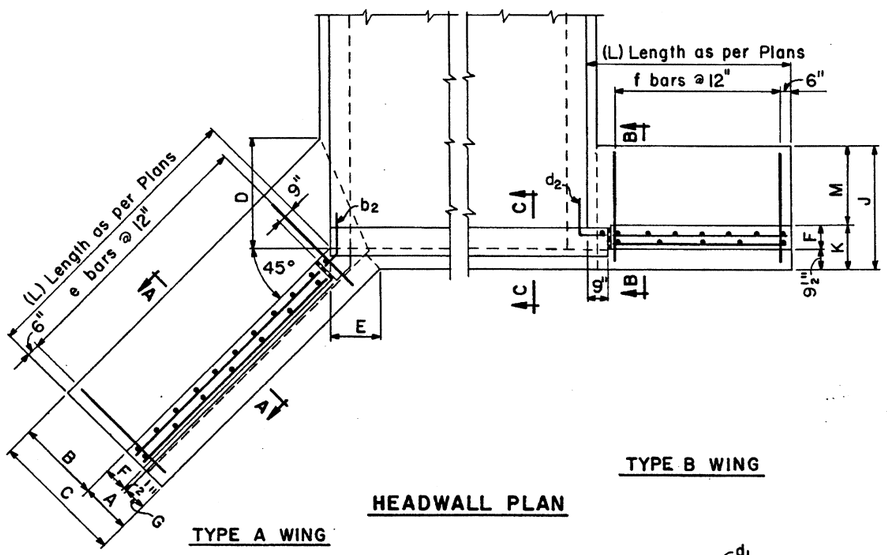

TYPE B WING

HEADWALL PLAN

TYPE A WING

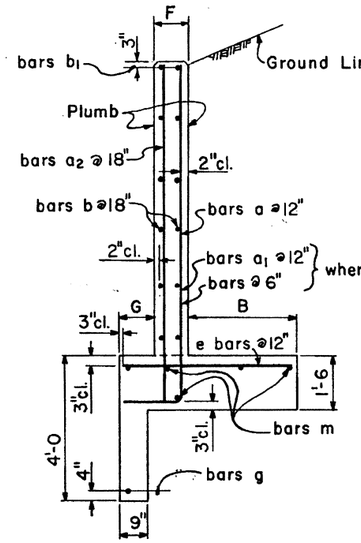

SECTION A-A

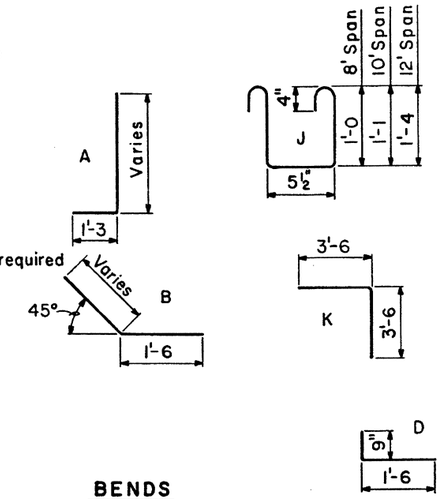

BENDS

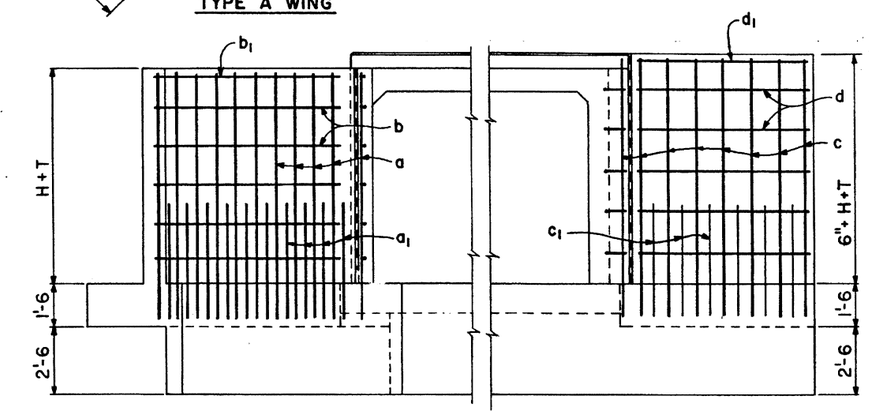

TYPE A WING
(Back Face Reinf.)

TYPE B WING
(Back Face Reinf.)

ELEVATION

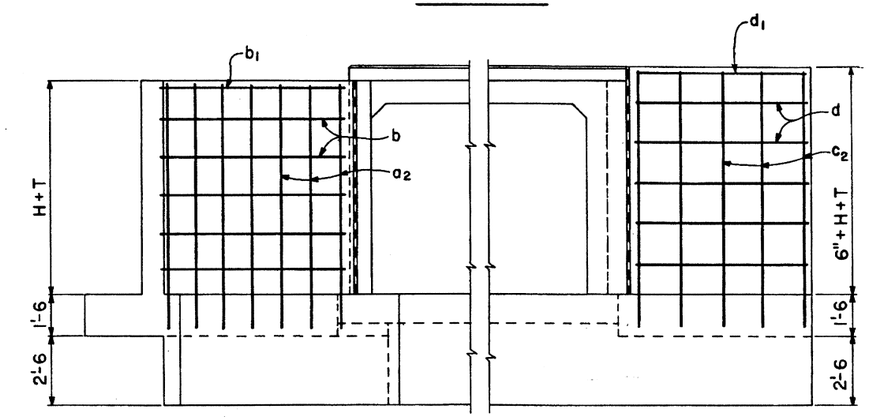

TYPE A WING
(Front Face Reinf.)

TYPE B WING
(Front Face Reinf.)

ELEVATION

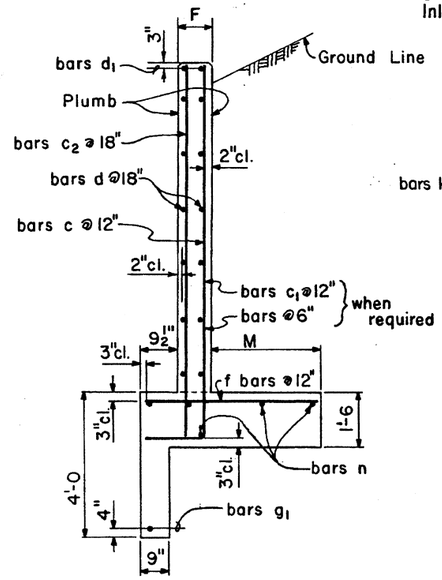

SECTION B-B

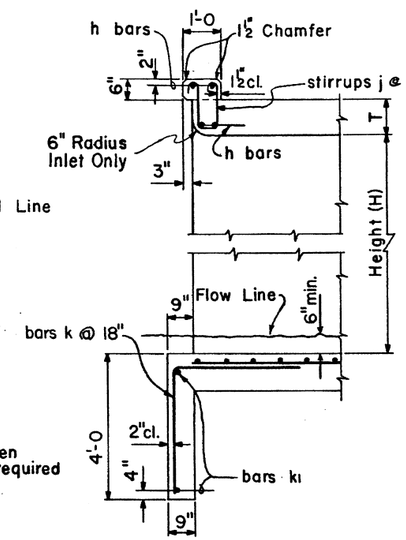

SECTION C-C

CURB & CUT-OFF WALL QUANTITIES
PER EACH ADDITIONAL BARREL

8' Spans		10' Spans		12' Spans	
Conc.	Steel	Conc.	Steel	Conc.	Steel
1.114	103	1.370	130	1.625	155

DIMENSIONS

Height of Opening	A	B	C	D	E	F	G	J	K	M
8'	1'-9	3'-9	5'-6	5'-0	1'-8¾	11½	0'-9	5'-6	1'-9	3'-9
9'	2'-0	4'-0	6'-0	5'-4	2'-1	11½	1'-0	6'-0	1'-9	4'-3
10'	2'-0	4'-6	6'-6	6'-0	2'-1	11½	1'-0	6'-6	1'-9	4'-9
11'	2'-4	4'-8	7'-0	6'-3	2'-6⅝	1'-0½	1'-3	7'-0	1'-10	5'-2
12'	2'-6	4'-9	7'-3	6'-5	2'-9⅜	1'-1½	1'-4	8'-0	1'-11	6'-1

WINGS STEEL LIST (L=H+2')

Mark	Bend	8' Height			9' Height			10' Height			11' Height			12' Height		
		No.	Size	Lgth.	No.	Size	Lgth.	No.	Size	Lgth.	No.	Size	Lgth.	No.	Size	Lgth.
TYPE A WING																
a	A	20	#7	11'-0	22	#8	12'-3	24	#6	13'-3	26	#7	14'-3	28	#7	15'-3
a1	A							24	#6	6'-6	26	#7	6'-9	28	#7	7'-0
a2	str.	14	#4	9'-9	14	#4	11'-0	16	#4	12'-0	18	#4	13'-0	18	#4	14'-0
b	✓	20	#4	9'-0	24	#4	10'-0	28	#4	11'-0	28	#4	12'-0	32	#4	13'-0
b1	✓	4	#6	9'-0	4	#6	10'-0	4	#6	11'-0	4	#6	12'-0	4	#6	13'-0
b2	B	12	#4	2'-3	14	#4	2'-3	16	#4	2'-3	16	#4	2'-3	18	#4	2'-3
e	str.	20	#5	5'-0	22	#6	5'-6	24	#7	6'-0	26	#7	6'-6	28	#8	6'-9
g	B	2	#4	12'-3	2	#4	13'-9	2	#4	14'-9	2	#4	16'-0	2	#4	17'-0
m	str.	10	#4	9'-6	10	#4	10'-6	10	#4	11'-6	10	#4	12'-6	10	#4	13'-6
TYPE B WING																
c	A	20	#7	11'-6	22	#8	12'-9	24	#6	13'-9	26	#7	14'-9	28	#7	15'-9
c1	✓							24	#6	6'-6	26	#7	6'-9	28	#7	7'-0
c2	str.	14	#4	10'-3	14	#4	11'-6	16	#4	12'-6	18	#4	13'-6	18	#4	14'-6
d	✓	24	#4	9'-0	28	#4	10'-0	28	#4	11'-0	32	#4	12'-0	36	#4	13'-0
d1	✓	4	#6	9'-0	4	#6	10'-0	4	#6	11'-0	4	#6	12'-0	4	#6	13'-0
d2	D	14	#4	2'-3	16	#4	2'-3	16	#4	2'-3	18	#4	2'-3	20	#4	2'-3
f	str.	20	#5	5'-0	22	#6	5'-6	24	#7	6'-0	26	#7	6'-6	28	#9	7'-6
g1	✓	2	#4	11'-3	2	#4	12'-3	2	#4	13'-3	2	#4	14'-3	2	#4	15'-3
n	✓	10	#4	9'-6	10	#4	10'-6	10	#4	11'-6	10	#4	12'-6	10	#4	13'-6

CURB & CUT-OFF WALL STEEL LIST

Mark	Bend	Size	8' Spans				10' Spans				12' Spans			
			1 Barrel		○	◇	1 Barrel		○	◇	1 Barrel		○	◇
			No.	Lgth.	No.	Lgth.	No.	Lgth.	No.	Lgth.	No.	Lgth.	No.	Lgth.
TYPE A WING														
h	str.	#6	4	9'-0		8'-9	4	11'-3		10'-10	4	13'-6		13'-0
j	J	#4	7	3'-6	5		8	3'-9	7		9	4'-3	8	
k	K	✓	4	7'-0	6		6	7'-0	7		7	7'-0	8	
k1	str.	✓	2	5'-9		8'-9	2	7'-6		10'-10	2	8'-3		13'-0
TYPE B WING														
h	str.	#6	4	10'-6		8'-9	4	12'-9		10'-10	4	15'-0		13'-0
j	J	#4	7	3'-6	6		9	3'-9	7		10	4'-3	8	
k	K	✓	7	7'-0	6		9	7'-0	7		10	7'-0	8	
k1	str.	✓	2	9'-6		8'-9	2	11'-6		10'-10	2	13'-6		13'-0

○ Additional number of bars per. ea. extra barrel.
◇ Additional length of bars per. ea. extra barrel.

APPROXIMATE HEADWALL QUANTITIES *

Span	Height	Hdwl. Type A Wings				Hdwl. Type B Wings			
		For L=H+2'		Per each Add. Ft.		For L=H+2'		Per each Add. Ft.	
		Conc.	Steel	Conc.	Steel	Conc.	Steel	Conc.	Steel
8'	8'	15.07	1017	.682	46	15.05	1095	.703	49
10'	8'	15.44	1045	.690	46	15.41	1128	.707	49
	9'	18.30	1462	.753	61	18.18	1556	.771	63
	10'	21.49	1655	.817	64	21.20	1708	.835	65
12'	8'	15.78	1071	.696	46	15.80	1155	.714	49
	9'	18.67	1488	.759	61	18.59	1582	.777	63
	10'	21.86	1680	.822	64	21.61	1734	.840	65
	11'	25.95	2197	.663	78	25.61	2295	.922	81
	12'	30.03	2596	1.015	87	30.86	2908	1.035	98

* Includes curb and cut-off wall quantities for a single barrel.

NOTE:
See B-01.10 for general notes and miscellaneous details.

NO.	DESCRIPTION OF REVISIONS	MADE BY	DATE
1	Wing thickness & curb height	JTW	7-76
2			
3			

	WT, DHY	8-72
DESIGN	KDM, APJ	8-72
DRAWN	NAB, APJ	3-73
CHECKED		

DESIGN APPROVED
R.C. Beechler

APPROVED FOR DISTRIBUTION
E.D. Anderson

ARIZONA
DEPARTMENT OF TRANSPORTATION
HIGHWAYS DIVISION
STANDARD DRAWINGS

INLET OR OUTLET
LEVEL WINGS,
HEIGHT 8' TO 12'

REVISION

STANDARD NO.
B-08.20

extra

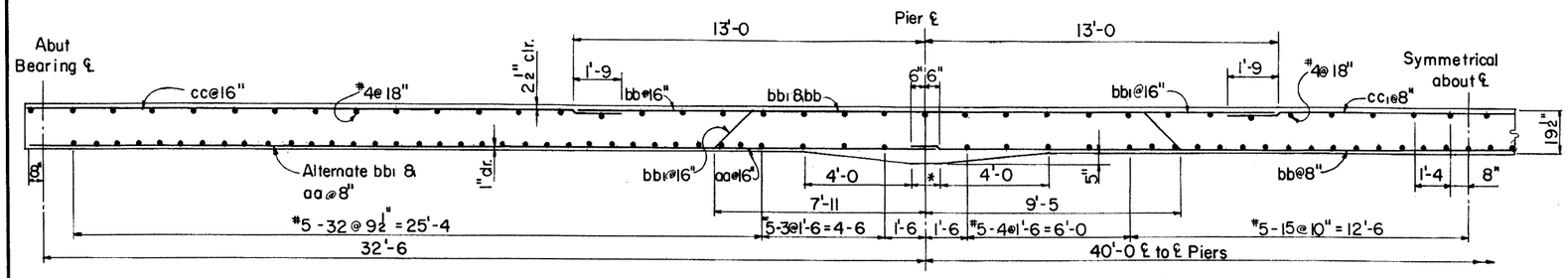

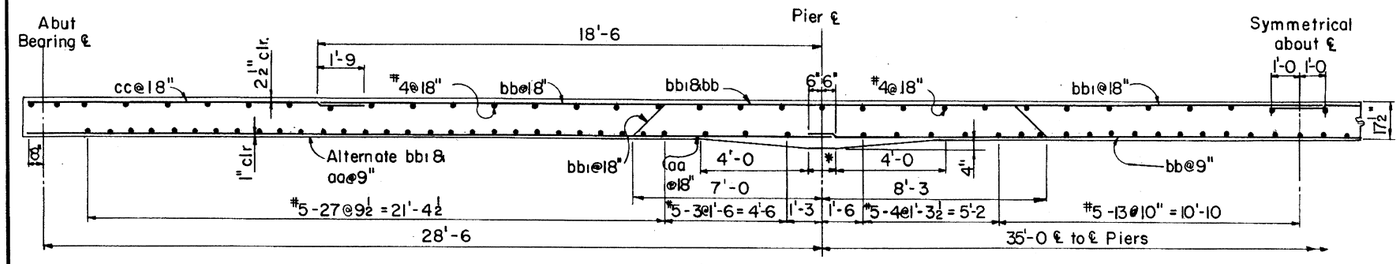

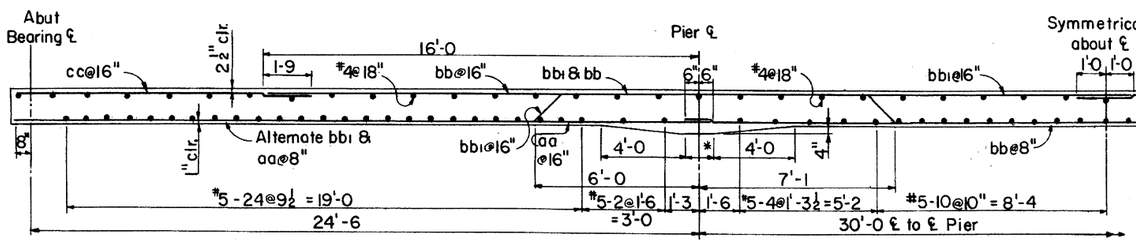

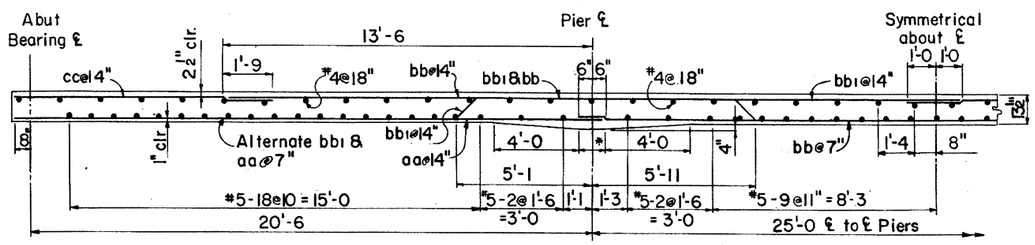

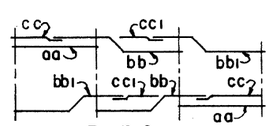

For 3 Spans

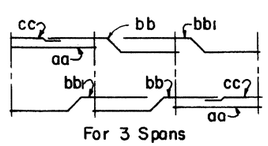

For 3 Spans

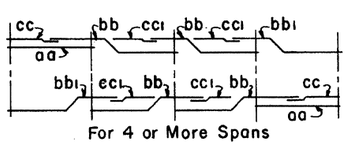

For 4 or More Spans

SLAB STEEL PLACING DIAGRAM

For 32½-40 Span Length

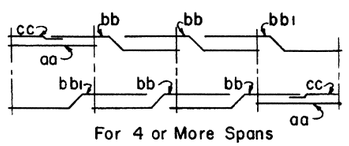

For 4 or More Spans

SLAB STEEL PLACING DIAGRAM

For 28½-35, 24½-30 & 20½-25 Span Lengths

STEEL LIST

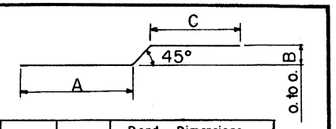

Span Lgths	Mark	Size	Bend	Lgth	Bend Dimensions A	B	C
32'-6, 40'-0	aa	10	str	33'-9			
	bb	10	⌒	54'-0	31'-1	1'-4	21'-2
	bb1	10	⌒	46'-9	25'-3	1'-4	19'-8
	cc	6	str	22'-0			
	cc1	4	str	17'-6			
28'-6, 35'-0	aa	10	str	29'-9			
	bb	10	⌒	54'-6	27'-3	1'-2	25'-8
	bb1	10	⌒	48'-3	22'-2	1'-2	24'-5
	cc	6	str	12'-6			
24'-6, 30'-0	aa	9	str	25'-9			
	bb	9	⌒	47'-0	23'-5	1'-0	22'-2
	bb1	9	⌒	41'-6	19'-2	1'-0	21'-1
	cc	6	str	11'-0			
20'-6, 25'-0	aa	8	str	21'-9			
	bb	8	⌒	39'-6	19'-7	10"	18'-8
	bb1	8	⌒	35'-0	16'-1	10"	17'-10
	cc	6	str	9'-6			

GENERAL NOTES:

See Project Drawings for cross section of deck slab, roadway width, curbs, railings, and foundations.
Minimum length of bridge shall be 3 spans. For additional length intermediate spans equal to the center span shall be added.
Construction - Standard Specifications Ariz. Dept. of Transportation Edition of 1982, revised to date.
Design - A.A.S.H.O. Specifications for Highway Bridges 1973.

Dead Load - Dead Load includes allowance of 25 pounds per square foot for future wearing surface.
Loading Class - HS20 - 44
Load Distribution - E = 4.0 + .06S (S taken as effective end span length)
Stresses -
Class S concrete f'_c = 4,500 psi; f_c = 1,400 psi
Reinforcing steel shall conform to ASTM Spec. A615.
Bar sizes #6 and smaller shall be Gr. 40 or Gr. 60; f_s = 20000 psi
Bar sizes #7 and larger shall be Grade 60; f_s = 24000 psi

Curbs and/or sidewalk shall be poured to grade after falsework has been struck.
Dimensions shall not be scaled from drawings.
Haunch dimension normal to centerline of bent.
Forms shall be cambered for dead load deflection, vertical curvature, form deflection and falsework settlement. Camber figures given in plans are for dead load only.

DEAD LOAD CAMBER

L	L'	A	B	C	D	E	F	G
32'-6	40'-0	0"	1/4"	9/32"	1/8"	0"	1/8"	9/32"
28'-6	35'-0	0"	3/16"	7/32"	3/32"	0"	3/32"	3/16"
24'-6	30'-0	0"	1/8"	5/32"	1/16"	0"	3/32"	5/32"
20'-6	25'-0	0"	3/32"	3/32"	1/32"	0"	1/32"	3/32"

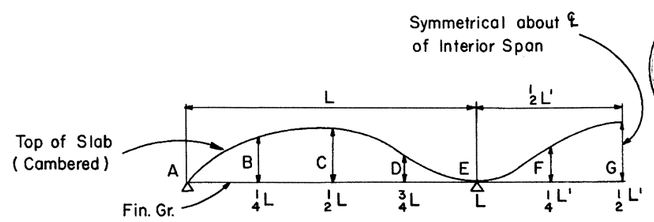

DEAD LOAD CAMBER DIAGRAM

NO SCALE

*Dimension varies. See Project Drawings for dimension and Special Pier Details.

DESIGN APPROVED	ARIZONA DEPARTMENT OF TRANSPORTATION HIGHWAYS DIVISION STANDARD DRAWINGS	REVISION
R. C. Brechler		10-86
APPROVED FOR DISTRIBUTION	CONTINUOUS SPAN SLAB HS20-44 LOADING	STANDARD NO.
E. H. Scudlin		B-09.10

NO.	DESCRIPTION OF REVISIONS	MADE BY	DATE
1	Added haunch dimension note	JTW	7-76
2	Change notes & clearances	WEB	2-82
3	Change Reinf. Note	CH	10-86

DESIGN	JEM	9-72	
DRAWN	CAG	11-72	
CHECKED	JEM, HW	12-72	

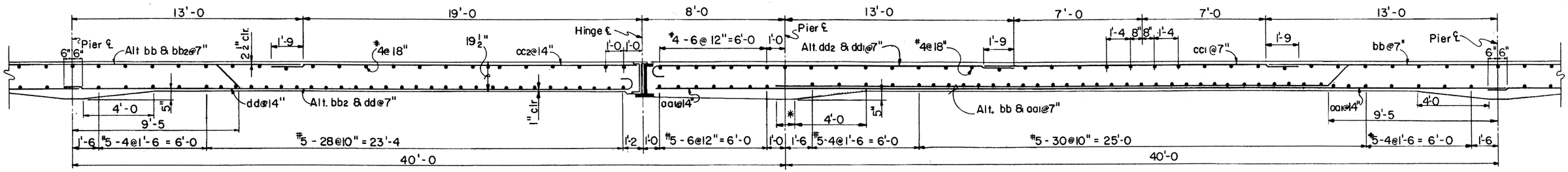

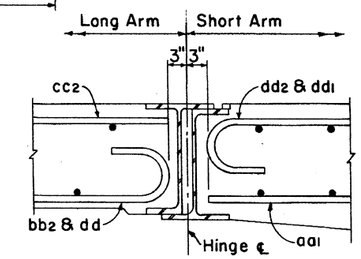

SECTION THROUGH JOINT

NOTES:

Refer to B-09.10 and Project Drawings for General Notes.

Refer to B-10.10 for steel list, bar placing diagrams and hinge details.

NOTE
The contractor shall excercise caution when installing hinge assembly. Reversed hinge installation will not provide required structural support for suspended arm.

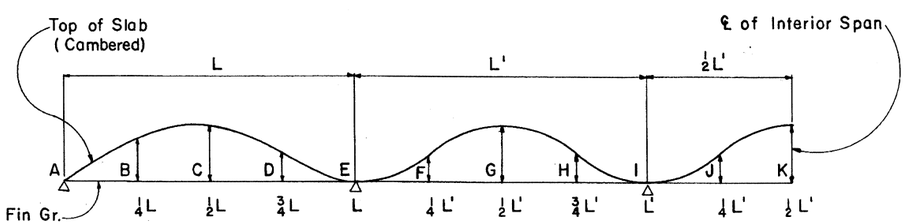

DEAD LOAD CAMBER DIAGRAM

NO SCALE

DEAD LOAD CAMBER

L	L'	A	B	C	D	E	F	G	H	I	J	K
32'-6	40'-0	0"	1/4"	9/32"	1/8"	0"	1/8"	9/32"	1/8"	0"	1/8"	9/32"
28'-6	35'-0	0"	3/16"	7/32"	3/32"	0"	3/32"	3/16"	3/32"	0"	3/32"	3/16"
24'-6	30'-0	0"	1/8"	5/32"	1/16"	0"	3/32"	5/32"	3/32"	0"	3/32"	5/32"
20'-6	25'-0	0"	3/32"	3/32"	1/32"	0"	1/32"	3/32"	1/32"	0"	1/32"	3/32"

Camber hinge span as per interior spans.

Registered Professional Engineer
CERTIFICATE EXPIRES
DEC. 31, 19
ARIZONA, U.S.A.

*Dimension varies. See Project Drawings for dimension and Special Pier Details.

DESIGN APPROVED	ARIZONA DEPARTMENT OF TRANSPORTATION HIGHWAYS DIVISION STANDARD DRAWINGS	REVISION 8/85
APPROVED FOR DISTRIBUTION	CONTINUOUS SPAN SLAB WITH HINGE HS20-44 LOADING	STANDARD NO. B-09.20

NO.	DESCRIPTION OF REVISIONS	MADE BY	DATE
1	Changed haunch dimension	JTW	7-76
2	Changed hinge	JEM	2-85
3			

DESIGN	JEM	10-72	
DRAWN	CAG	11-72	
CHECKED	JEM, HW	12-72	

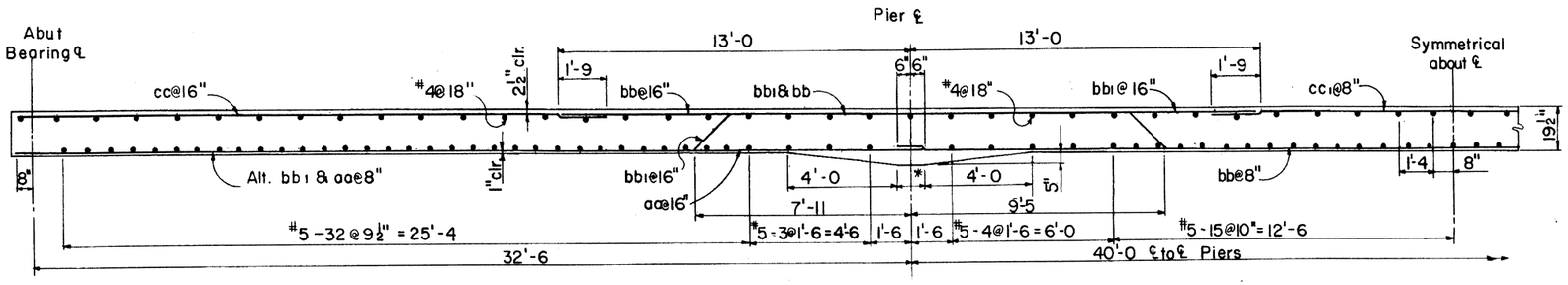

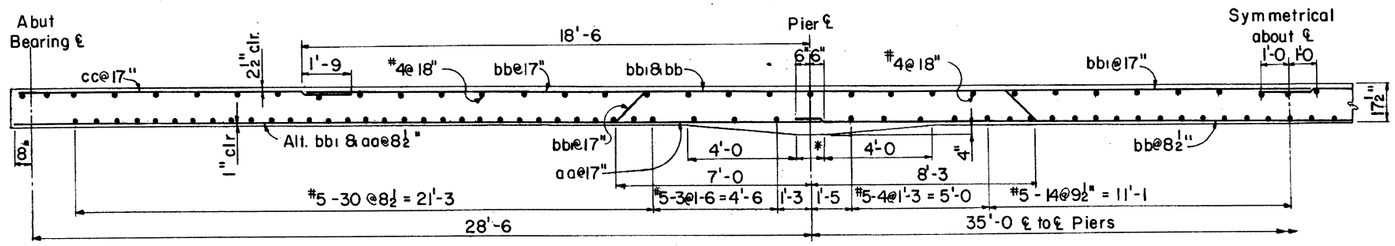

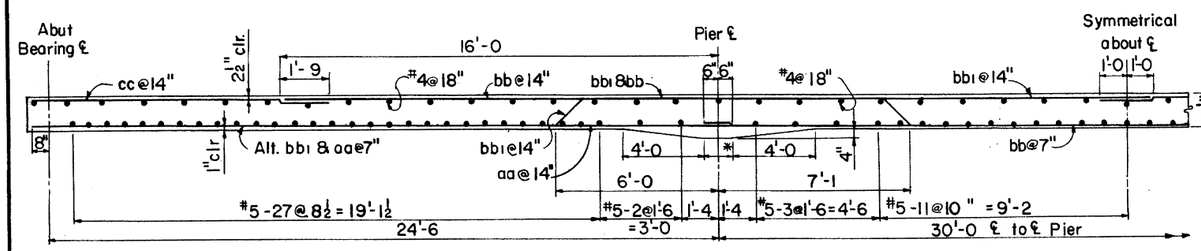

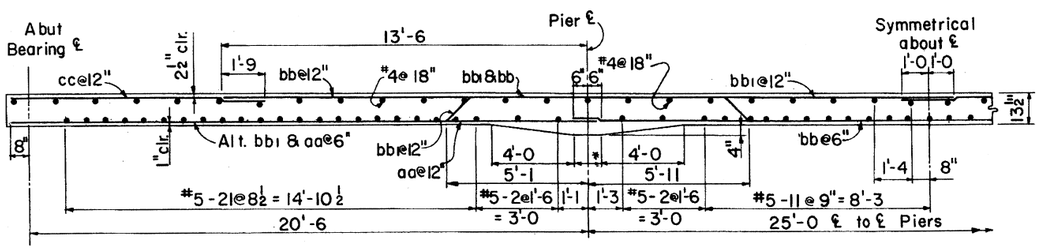

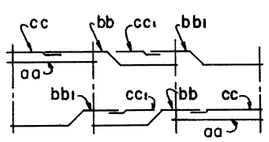

For 3 Spans

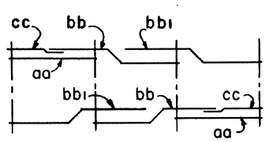

For 3 Spans

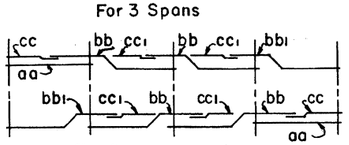

For 4 or more spans

SLAB STEEL PLACING DIAGRAM

For $32\frac{1}{2}$ - 40 Span Length

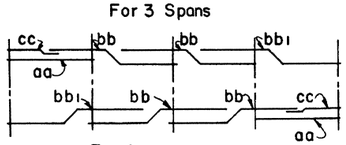

For 4 or more spans

SLAB STEEL PLACING DIAGRAM

For $28\frac{1}{2}$ - 35, $24\frac{1}{2}$ - 30, $20\frac{1}{2}$ - 25 Span Lengths

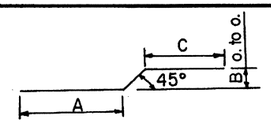

STEEL LIST

Span Lgths	Mark	Size	Bend	Lgth	Bend Dimensions A	B	C
32'-6, 40'-0	aa	10	str	33'-9			
	bb	10	⌒	54'-0	31'-1	1'-4	21'-2
	bb1	10	⌒	46'-9	25'-3	1'-4	19'-8
	cc	6	str	22'-0			
	cc1	4	str	17'-6			
28'-6, 35'-0	aa	10	str	29'-9			
	bb	10	⌒	54'-6	27'-3	1'-2	25'-8
	bb1	10	⌒	48'-3	22'-2	1'-2	24'-5
	cc	6	str	12'-6			
24'-6, 30'-0	aa	9	str	25'-9			
	bb	9	⌒	47'-0	23'-5	1'-0	22'-2
	bb1	9	⌒	41'-6	19'-2	1'-0	21'-1
	cc	6	str	11'-0			
20'-6, 25'-0	aa	8	str	21'-9			
	bb	8	⌒	39'-6	19'-7	10"	18'-8
	bb1	8	⌒	35'-0	16'-1	10"	17'-10
	cc	6	str	9'-6			

DEAD LOAD CAMBER

L	L'	A	B	C	D	E	F	G
32'-6	40'-0	0"	1/4"	9/32"	1/8"	0"	1/8"	9/32"
28'-6	35'-0	0"	3/16"	7/32"	3/32"	0"	3/32"	3/16"
24'-6	30'-0	0"	1/8"	5/32"	1/16"	0"	3/32"	5/32"
20'-6	25'-0	0"	3/32"	3/32"	1/32"	0"	1/32"	3/32"

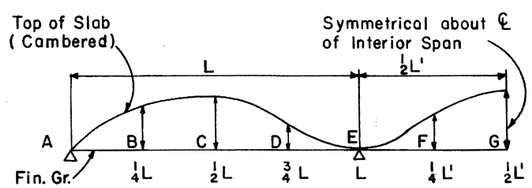

DEAD LOAD CAMBER DIAGRAM

NO SCALE

GENERAL NOTES:

See Project Drawings for cross section of deck slab, roadway width, curbs, railings, and foundations.

Minimum length of bridge shall be 3 spans. For additional length intermediate spans equal to the center span shall be added.

Construction - Standard Specifications Arizona Department of Transportation Edition of 1982, revised to date.

Design - A.A.S.H.O. Specifications for Highway Bridges 1973.

Dead Load - Dead Load includes allowance of 25 pounds per square foot for future wearing surface.

Loading Class - HS20-44 and/or Interstate Alternate Loading.

Load Distribution - E = 4.0 + .06S (S taken as effective end span length)

Stresses-

Class S concrete f'c = 4,500 psi; fc = 1,400 psi

Reinforcing steel shall conform to ASTM Spec. A615.

Bar sizes #6 and smaller shall be Gr. 40 or Gr. 60; f_s = 20000 psi

Bar sizes #7 and larger shall be Grade 60; f_s = 24000 psi

Curbs and/or sidewalk shall be poured to grade after falsework has been struck.

Dimensions shall not be scaled from drawings.

Haunch dimension normal to centerline of bent.

Forms shall be cambered for dead load deflection, vertical curvature, form deflection and falsework settlement. Camber figures given in plans are for dead load only.

* Dimension varies. See Project Drawings for dimension and Special Pier Details.

DESIGN	JEM	9-72	NO.	DESCRIPTION OF REVISIONS	MADE BY	DATE
DRAWN	CAG	11-72	1	Added haunch dimension note	JTW	7-76
CHECKED	JEM, HW	12-72	2	Chg. steel note & bar dim.	WEB	2-82
			3	Changed Reinf. Note	CH	10-86

DESIGN APPROVED	ARIZONA DEPARTMENT OF TRANSPORTATION HIGHWAYS DIVISION STANDARD DRAWINGS	REVISION
R.C. Brechler		10-86
APPROVED FOR DISTRIBUTION	CONTINUOUS SPAN SLAB INTERSTATE LOADING	STANDARD NO.
		B-09.30

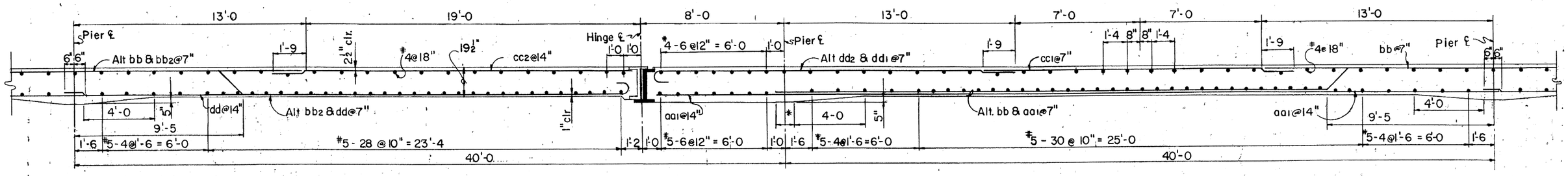

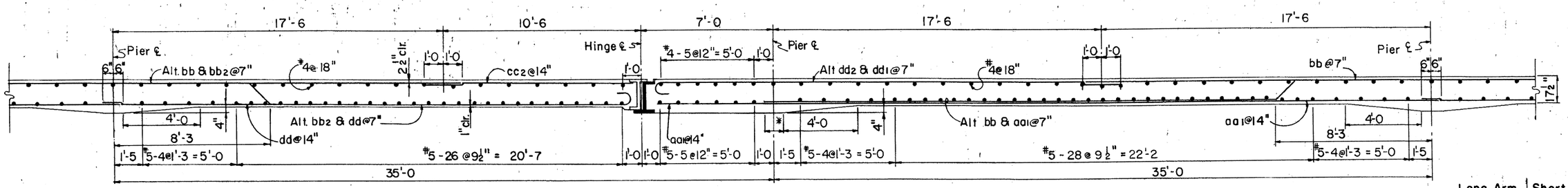

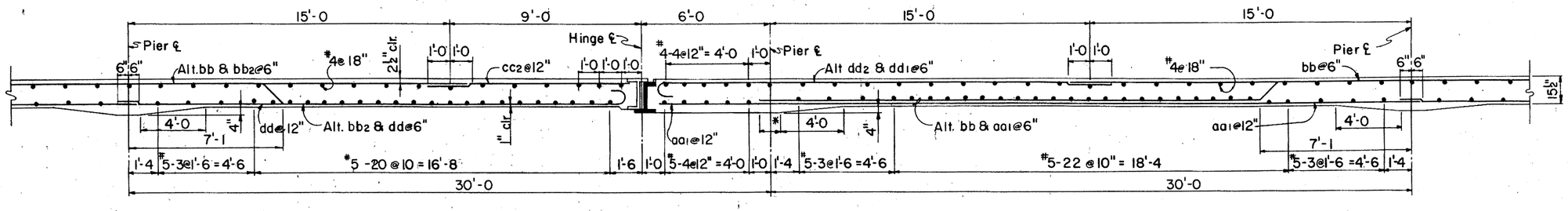

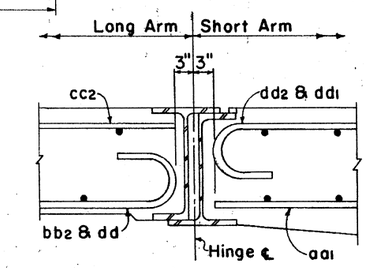

SECTION THROUGH JOINT

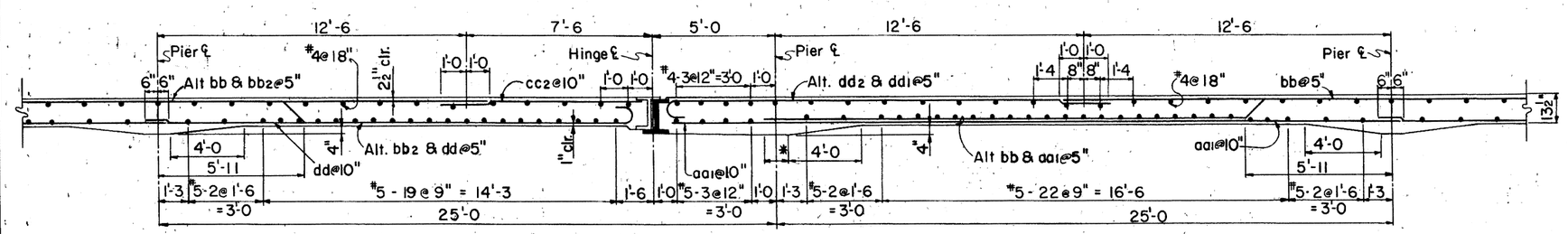

NOTES:

Refer to B-09.30 and Project Drawings for General Notes.
Refer to B-10.10 for steel list, bar placing diagram and hinge details.

NOTE
The contractor shall excercise caution when installing hinge assembly. Reversed hinge installation will not provide required structural support for suspended arm.

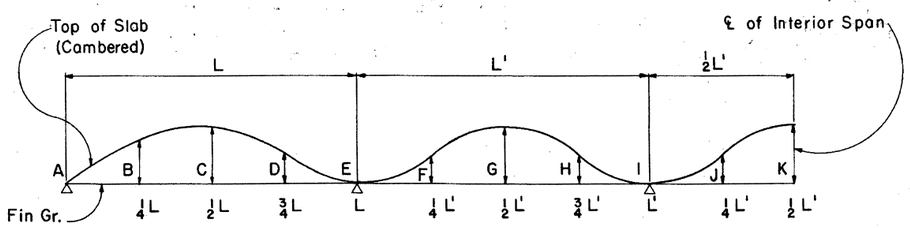

DEAD LOAD CAMBER DIAGRAM
NO SCALE

DEAD LOAD CAMBER

L	L'	A	B	C	D	E	F	G	H	I	J	K
32'-6	40'-0	0"	1/4"	9/32"	1/8"	0"	1/8"	9/32"	1/8"	0"	1/8"	9/32"
28'-6	35'-0	0"	3/16"	7/32"	3/32"	0"	3/32"	3/16"	3/32"	0"	3/32"	3/16"
24'-6	30'-0	0"	1/8"	5/32"	1/16"	0"	3/32"	5/32"	3/32"	0"	3/32"	3/32"
20'-6	25'-0	0"	3/32"	3/32"	1/32"	0"	1/32"	3/32"	1/32"	0"	1/32"	3/32"

Camber hinge span as per interior spans

NO.	DESCRIPTION OF REVISIONS	MADE BY	DATE
1	Changed haunch dimension	JTW	7-76
2	Changed hinge	JEM	2-85
3			

	JEM	10-72
DESIGN	CAG	11-72
DRAWN	JEM, HW	12-72
CHECKED		

Registered Professional Engineer (Civil) Certificate Expires Dec. 31, 19__ ARIZONA, U.S.A.

* Dimension varies. See Project Drawings for dimension and Special Pier Details.

DESIGN APPROVED	ARIZONA DEPARTMENT OF TRANSPORTATION HIGHWAYS DIVISION STANDARD DRAWINGS	REVISION 8/85
APPROVED FOR DISTRIBUTION	CONTINUOUS SPAN SLAB WITH HINGE, INTERSTATE LOADING	STANDARD NO. B-09.40

INTERSTATE OR HS20 - 44*

Span Lgth	Mark	Size	Bend	Lgth	Bend Dimensions A	B	C	D	E
40'-0	aa1	10	str	48'-3					
	bb	10	2	54'-0	31'-1	1'-4	21'-2		
	bb2	10	1	46'-4	22'-4	1'-4	21'-2	1'-0¾"	11½"
	cc1	4	str	17'-6					
	cc2	6	str	20'-6					
	dd	10	3	33'-4	32'-3	9"	9½"		
	dd1	10	3	21'-11	20'-9	9"	9½"		
	dd2	10	3	21'-11	20'-9	9"	9½"		
35'-0	aa1	10	str	42'-3					
	bb	10	2	54'-6	27'-3	1'-2	25'-8		
	bb2	10	1	47'-10	19'-6	1'-2	25'-8	1'-0¾"	11½"
	cc2	6	str	11'-3					
	dd	10	3	29'-4	28'-3	9"	9½"		
	dd1	10	3	32'-8	31'-7	9"	9½"		
	dd2	10	3	26'-5	25'-3	9"	9½"		
30'-0	aa1	9	str	36'-3					
	bb	9	2	47'-0	23'-5	1'-0	22'-2		
	bb2	9	1	41'-1	16'-8	1'-0	22'-2	11½"	10"
	cc2	6	str	9'-9					
	dd	9	3	25'-4	24'-3	8"	8½"		
	dd1	9	3	27'-8	26'-7	8"	8½"		
	dd2	9	3	22'-8	21'-9	8"	8½"		
25'-0	aa1	8	str	30'-3					
	bb	8	2	39'-6	19'-7	10"	18'-8		
	bb2	8	1	34'-7	13'-10	10"	18'-8	8"	8"
	cc2	6	str	8'-3					
	dd	8	3	21'-1	20-3	7"	7½"		
	dd1	8	3	22'-5	21'-7	7"	7½"		
	dd2	8	3	19'-2	18'-3	7"	7½"		

* Bar sizes and bend dimensions are the same for both Interstate and HS20-44 slabs. Bar spacing varies for the two cases. See B-09.20 and B-09.40 for details.

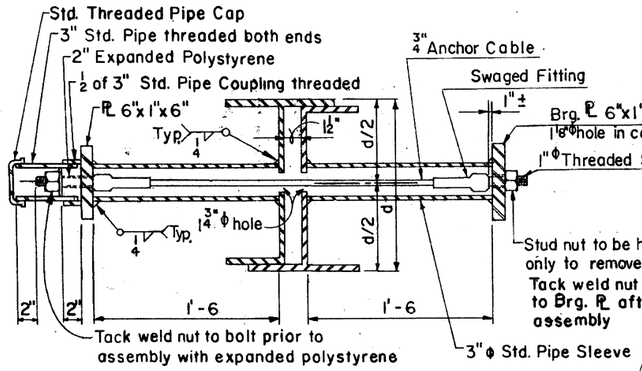

SECTION THRU HINGE RESTRAINER

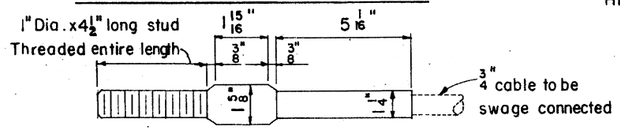

SWAGED FITTING AND STUD DETAIL

NOTE:

Anchor cable shall be 6 x 19 classification, galvanized, with a minimum breaking strength of 21.4 tons.

Swaged fitting and stud assembly shall conform to the requirements of American Iron and Steel Institute 1035 and shall develop the breaking strength of the cable.

Expanded polystyrene shall be shipped loose and assembled after hinge joint is erected.

HINGE RESTRAINER DETAILS

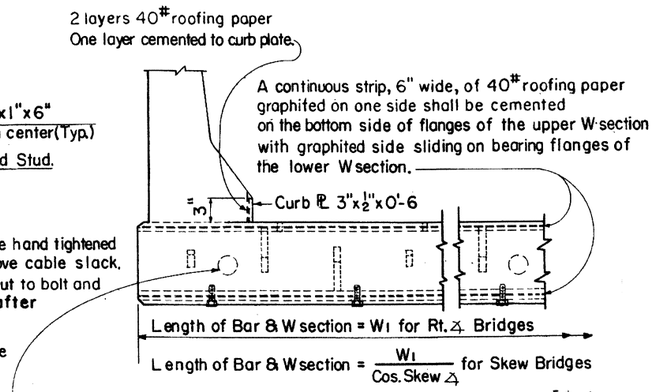

SECTION D-D

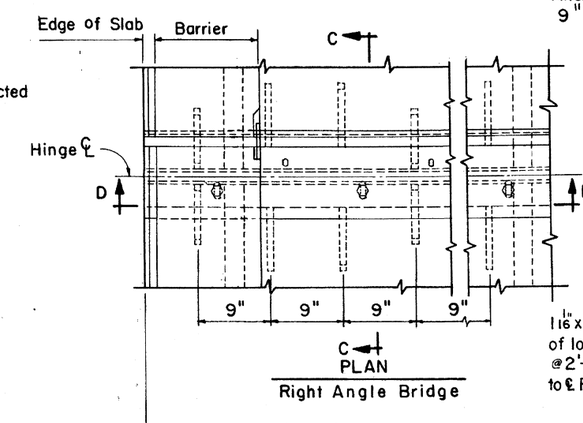

PLAN

Right Angle Bridge

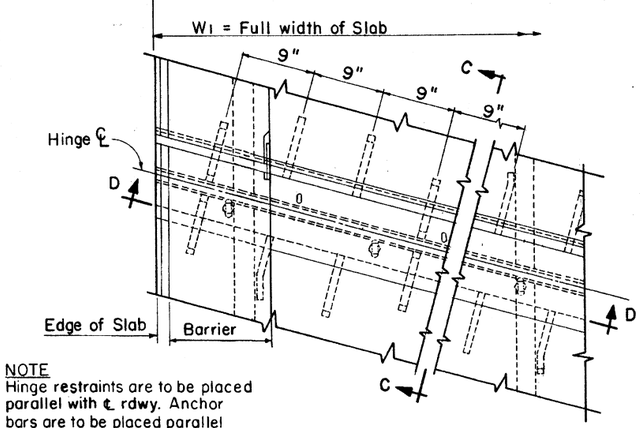

NOTE

Hinge restraints are to be placed parallel with ℄ rdwy. Anchor bars are to be placed parallel with ℄ rdwy. for skews in excess of 10°

PLAN

Skew Bridge

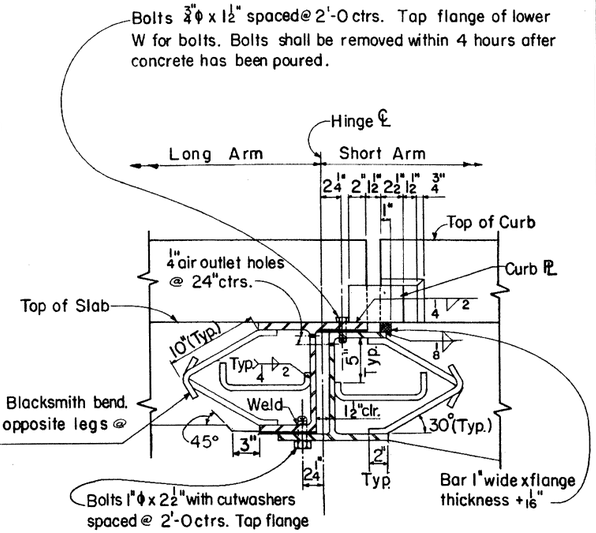

SECTION C-C

NOTES: W sections see table below

Burn off one half flange of each section flush with web face.

Bearing faces of flanges shall be ground smooth after drilling and tapping.

W sections shall have parallel flange faces.

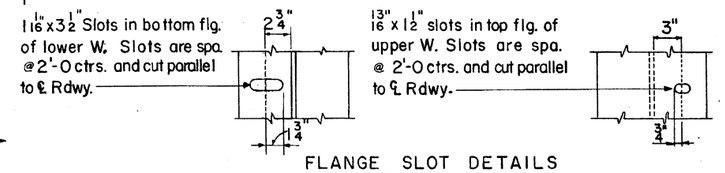

FLANGE SLOT DETAILS

NOTES:

Structural steel shall conform to ASTM Spec. A36.

Paint and painting shall conform to Standard Specifications. Contact surfaces shall not be painted.

Slab Hinge Joint shall be shop assembled, shipped and erected as a unit. Unit shall be shop fabricated to conform to the roadway section as noted on deck details.

Joint shall be continuous for lengths 40 feet or less. For lengths over 40 feet the joint may be two pieces butted together, without welded splicing, at the roadway crown or construction centerline.

Butted ends shall meet smoothly on the roadway surface after installation or they shall be ground smooth.

Reinforcing steel shall conform to ASTM Spec. A615

Bar sizes #6 and smaller shall be Gr. 40 or Gr. 60; f_s=20000psi

Bar sizes #7 and larger shall be Grade 60; f_s=24000psi

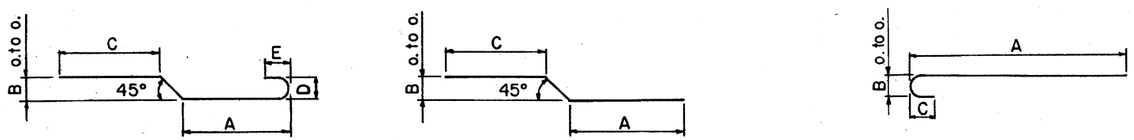

BEND 1 BEND 2 BEND 3

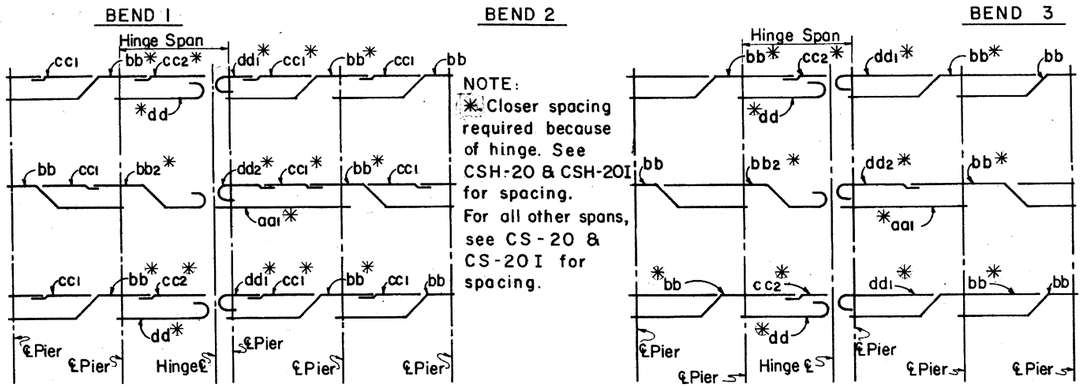

NOTE:

* Closer spacing required because of hinge. See CSH-20 & CSH-20I for spacing.

For all other spans, see CS-20 & CS-20I for spacing.

For 40' Span Lengths

For 35', 30' & 25' Span Lengths

STEEL PLACING DIAGRAM FOR HINGE SPAN & ADJACENT SPANS

TABLE OF W SECTIONS FOR VARIOUS SLAB THICKNESSES

Slab Thickness	W Section
19½"	W 21 x 111
17½"	W 18 x 97
15½"	W 16 x 77
13½"	W 14 x 90

NO.	DESCRIPTION OF REVISIONS	MADE BY	DATE
4	Change notes & bar dim.	WEB	8-82
5	Changed hinge sect., hinge restrainer & bar lgths	JEM	2-85
6	Revised Paint Note.	C.H.	10-86

NO.	DESCRIPTION OF REVISIONS	MADE BY	DATE
1	Joint note added	SEA	11-74
2	Reinf. Note changed & W Shapes.	C.H.	8-80
3	Change W18X97 to W14X99	WB	5-81

DESIGN	JEM	10-72
DRAWN	CAG	11-72
CHECKED	JEM, HW	12-72

DESIGN APPROVED R.C. Buehler

APPROVED FOR DISTRIBUTION E.H. Zandi

ARIZONA DEPARTMENT OF TRANSPORTATION HIGHWAYS DIVISION STANDARD DRAWINGS

SLAB HINGE JOINT AND HINGE SPAN REINFORCING DETAILS

REVISION 10-86

STANDARD NO. B-10.10

INTERSTATE OR HS20 - 44*

Span Lgth	Mark	Size	Bend	Lgth	Bend Dimensions A	B	C	D	E
40'-0	aa1	10	str	48'-3					
	bb	10	2	54'-0	31'-1	1'-4	21'-2		
	bb2	10	1	46'-4	22'-4	1'-4	21'-2	1'-0¾	11½"
	cc1	4	str	17'-6					
	cc2	6	str	20'-6					
	dd	10	3	33'-4	32'-3	9"	9½"		
	dd1	10	3	21'-11	20'-9	9"	9½"		
	dd2	10	3	21'-11	20'-9	9"	9½"		
35'-0	aa1	10	str	42'-3					
	bb	10	2	54'-6	27'-3	1'-2	25'-8		
	bb2	10	1	47'-10	19'-6	1'-2	25'-8	1'-0¾	11½"
	cc2	6	str	11'-3					
	dd	10	3	29'-4	28'-3	9"	9½"		
	dd1	10	3	32'-8	31'-7	9"	9½"		
	dd2	10	3	26'-5	25'-3	9"	9½"		
30'-0	aa1	9	str	36'-3					
	bb	9	2	47'-0	23'-5	1'-0	22'-2		
	bb2	9	1	41'-1	16'-8	1'-0	22'-2	11½"	10"
	cc2	6	str	9'-9					
	dd	9	3	25'-4	24'-3	8"	8½"		
	dd1	9	3	27'-8	26'-7	8"	8½"		
	dd2	9	3	22'-8	21'-9	8"	8½"		
25'-0	aa1	8	str	30'-3					
	bb	8	2	39'-6	19'-7	10"	18'-8		
	bb2	8	1	34'-7	13'-10	10"	18'-8	8"	8"
	cc2	6	str	8'-3					
	dd	8	3	21'-1	20'-3	7"	7½"		
	dd1	8	3	22'-5	21'-7	7"	7½"		
	dd2	8	3	19'-2	18'-3	7"	7½"		

* Bar sizes and bend dimensions are the **same** for both Interstate and HS20-44 slabs. Bar spacing varies for the two cases. See B-09.20 and B-09.40 for details.

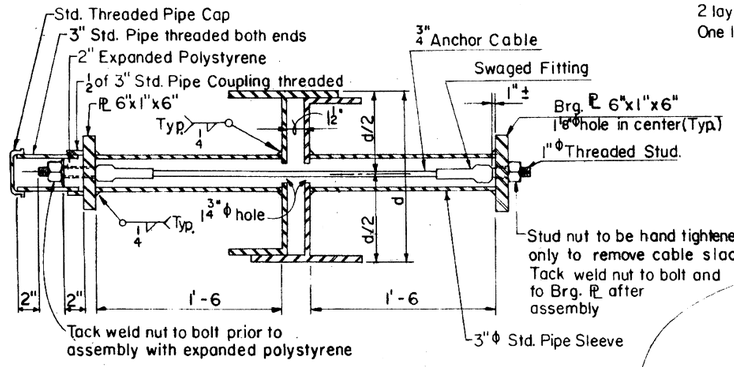

SECTION THRU HINGE RESTRAINER

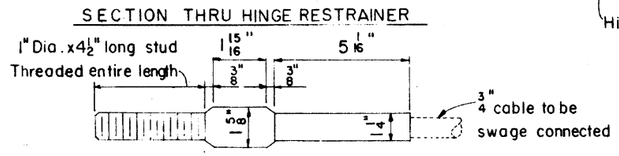

SWAGED FITTING AND STUD DETAIL

NOTE:

Anchor cable shall be 6 x 19 classification, galvanized, with a minimum breaking strength of 21.4 tons.

Swaged fitting and stud assembly shall conform to the requirements of American Iron and Steel Institute 1035 and shall develop the breaking strength of the cable.

Expanded polystyrene shall be shipped loose and assembled after hinge joint is erected.

HINGE RESTRAINER DETAILS

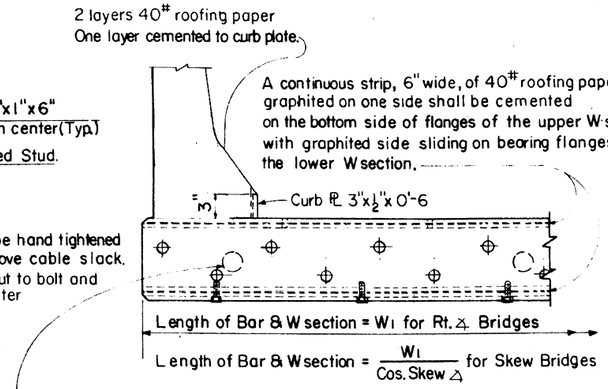

SECTION D-D

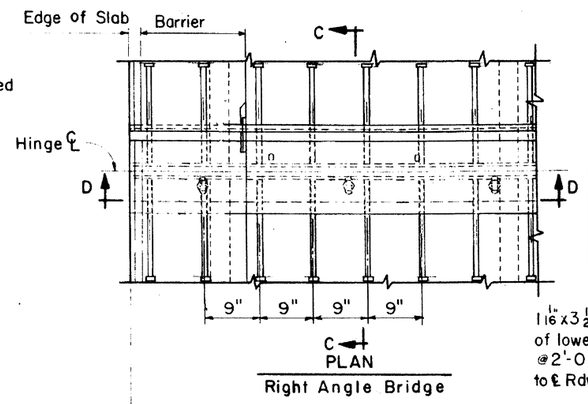

PLAN

Right Angle Bridge

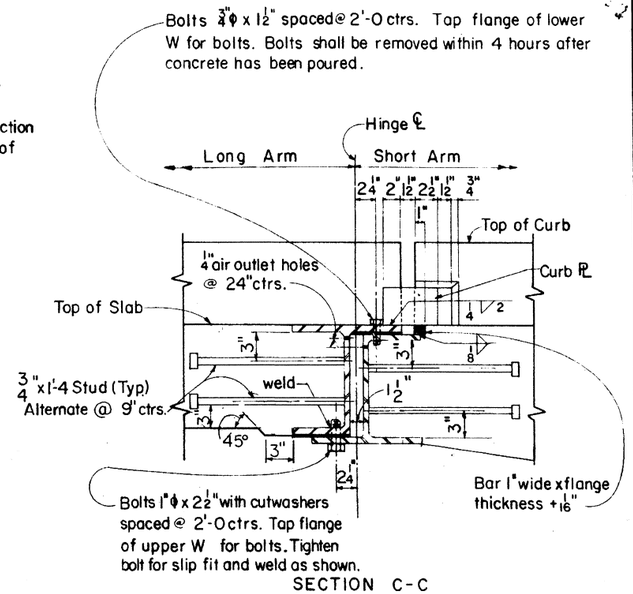

SECTION C-C

NOTES: W sections see table below

Burn off one half flange of each section flush with web face.

Bearing faces of flanges shall be ground smooth after drilling and tapping.

W sections shall have parallel flange faces.

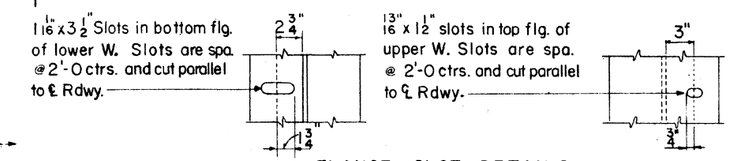

FLANGE SLOT DETAILS

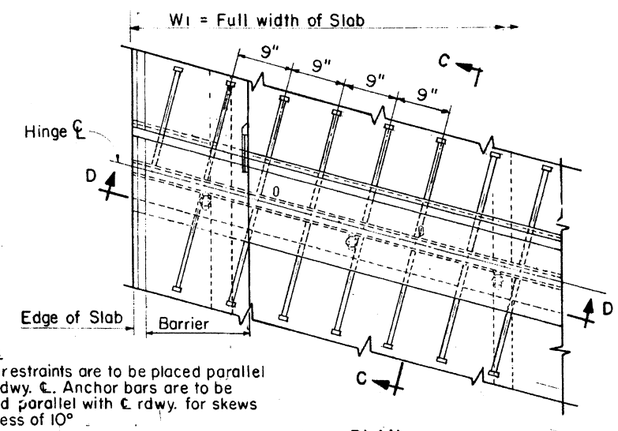

NOTE

Hinge restraints are to be placed parallel with rdwy. ℄. Anchor bars are to be placed parallel with ℄ rdwy. for skews in excess of 10°

PLAN

Skew Bridge

NOTES:

Structural steel shall conform to ASTM Spec. A36.

Paint and painting shall conform to Standard Specifications. Contact surfaces shall not be painted.

Slab Hinge Joint shall be shop assembled, shipped and erected as a unit. Unit shall be shop fabricated to conform to the roadway section as noted on deck details.

Joint shall be continuous for lengths 40 feet or less. For lengths over 40 feet the joint may be two pieces butted together, without welded splicing, at the roadway crown or construction centerline.

Butted ends shall meet smoothly on the roadway surface after installation or they shall be ground smooth.

Reinforcing steel shall conform to ASTM Spec. A615

Bar sizes #6 and smaller shall be Gr. 40 or Gr. 60; f_s = 20000 psi

Bar sizes #7 and larger shall be Grade 60; f_s = 24000 psi

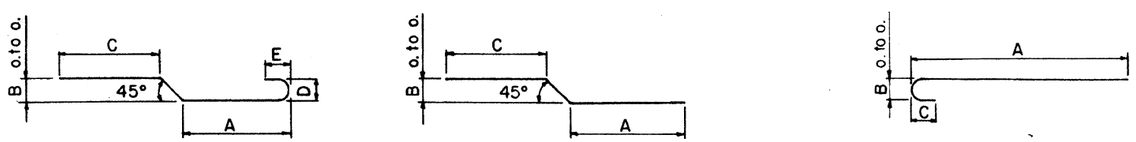

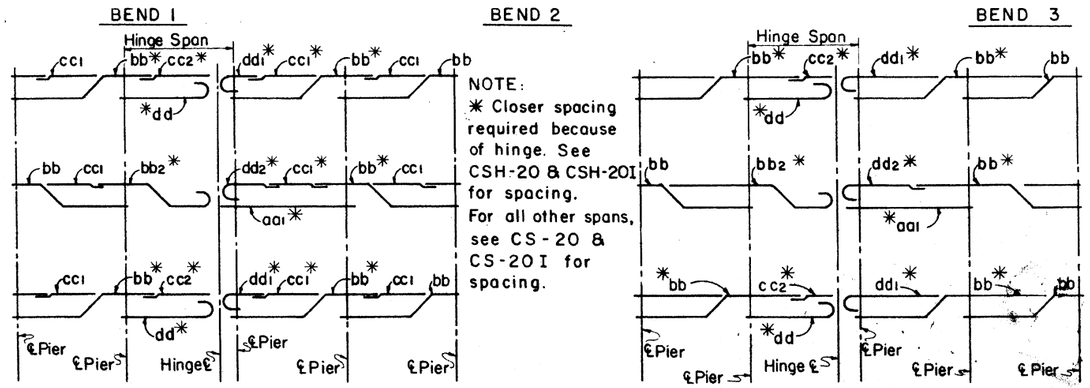

NOTE:

* Closer spacing required because of hinge. See CSH-20 & CSH-20I for spacing.

For all other spans, see CS-20 & CS-20I for spacing.

For 40' Span Lengths

For 35', 30' & 25' Span Lengths

STEEL PLACING DIAGRAM FOR HINGE SPAN & ADJACENT SPANS

TABLE OF W SECTIONS FOR VARIOUS SLAB THICKNESSES

Slab Thickness	W Section
19½"	W 21 x 111
17½"	W 18 x 97
15½"	W 16 x 77
13½"	W 14 x 90

NO.	DESCRIPTION OF REVISIONS	MADE BY	DATE
1	Changed hinge sect., hinge restrainer & bar lgths	JEM	2-85
2	Revised Paint Note	CH	10-86
3			
4			
5			
6			

DESIGN WEB 12-81
DRAWN N.A.B. 12-82
CHECKED

DESIGN APPROVED R.C. Buehler

APPROVED FOR DISTRIBUTION E.H. Chandler

ARIZONA DEPARTMENT OF TRANSPORTATION HIGHWAYS DIVISION STANDARD DRAWINGS

REVISION 10-86

SLAB HINGE JOINT AND HINGE SPAN REINFORCING DETAILS

STANDARD NO. B-10.11

	Inlet End			outlet End		
Skew ∡	15°	30°	45°	15°	30°	45°
Θ_1	75°	90°	90°	85°	90°	90°
Θ_2	45°	40°	25°	55°	40°	25°

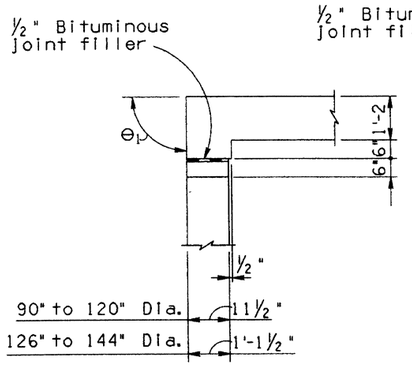

DETAIL B

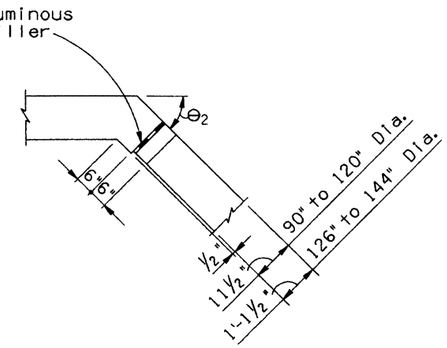

DETAIL C

NOTE:
When straight anchor bolt will not fit in headwall use alternate anchor bolt.

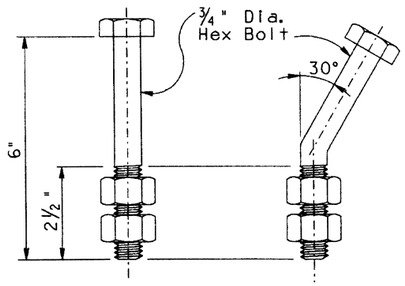

ANCHOR BOLT DETAIL

ALTERNATE ANCHOR BOLT DETAIL

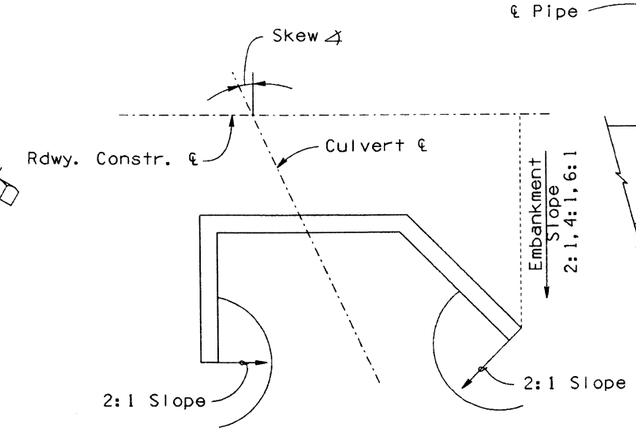

FILL PLACEMENT DETAIL

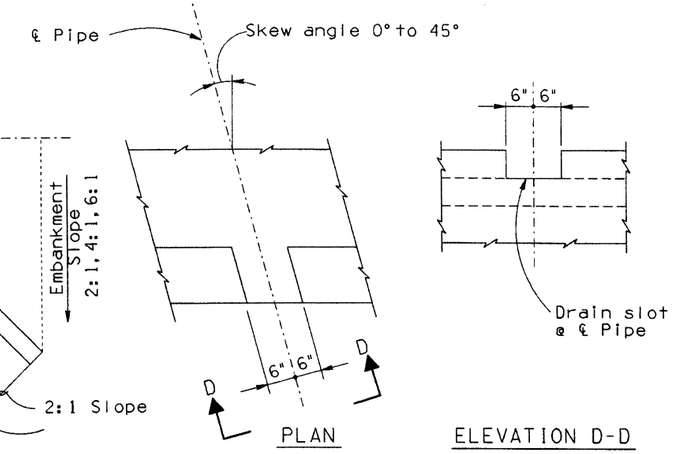

PLAN

ELEVATION D-D

APRON DRAIN DETAIL

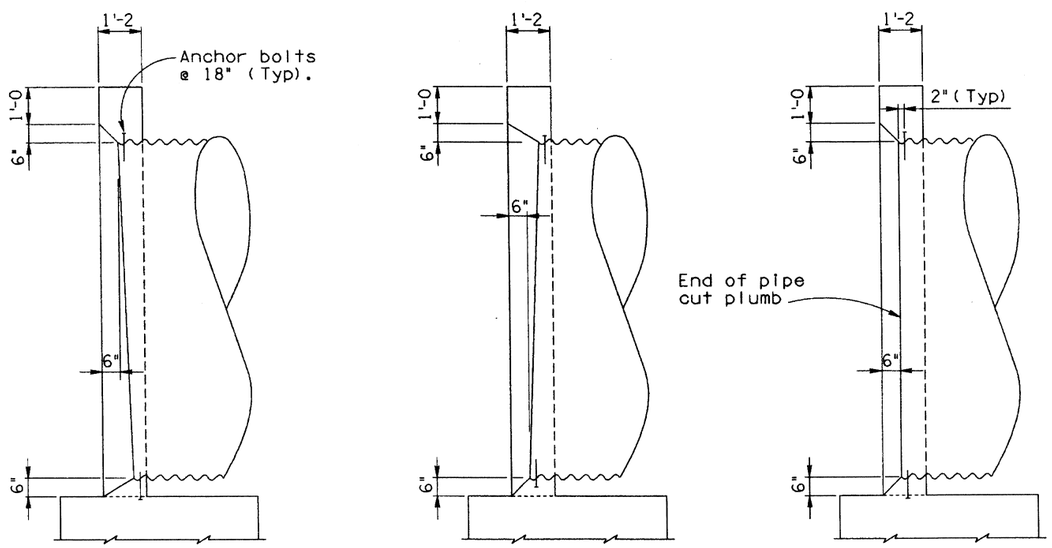

Outlet End

Inlet End

Outlet or Inlet End

DETAIL D

DETAIL E

NOTE:
Headwall details shown on this sheet are for pipes 90" in diameter or greater.

Cut end of pipe plumb if pipe slope vs. pipe dia. falls above line. See DETAIL E.
No cut required when pipe slope vs. pipe dia. falls below line. See DETAIL D.

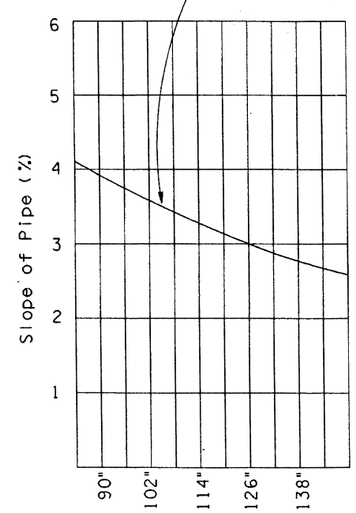

Pipe Dia.

CHART
(Use to determine treatment at end of pipe).

GENERAL NOTES:

Construction Specification - Arizona Department of Transportation Standard Specifications for Road and Bridge Construction, latest Edition.

Design Specifications - AASHTO Standard Specifications for Highway Bridges, Edition of 1989; and the 1990 and 1991 Interim Secifications.

Loading Class - HS20-44 and/or Interstate Alternate Loading.

All concrete shall be Class "S" unless noted otherwise.

Reinforcing steel shall conform to ASTM Specification A615. Bar sizes #6 and smaller shall be designed as Grade 40 but may be furnished as Grade 40 or Grade 60. Bar sizes #7 and larger shall be designed and furnished as Grade 60.

All bend dimensions for reinforcing steel shall be out-to-out of bars. All placement dimensions for reinforcing steel shall be to center of bars unless noted otherwise.

All reinforcing steel shall have 2 inch clear cover unless noted otherwise.

Stresses:
Concrete..... f'c = 3000 psi
Grade 40 reinforcing steel ..... fs = 20000 psi
Grade 60 reinforcing steel ..... fs = 24000 psi

Bolt material shall conform to ASTM Specs A307.
Bolts shall be galvanized to conform to ASTM Specs A153.
When end of pipe is cut to fit skew or slope, disturbed area of pipe shall be treated in accordance with requirements of Standard Specifications.

Chamfer all exposed corners ¾" as per Standard B-19.10 unless noted otherwise.

Dimensions shall not be scaled from drawings.

DESIGN APPROVED	ARIZONA DEPARTMENT OF TRANSPORTATION HIGHWAYS DIVISION STANDARD DRAWINGS	REVISION	4-92
APPROVED FOR DISTRIBUTION	PIPE CULVERT HEADWALLS MISCELLANEOUS DETAILS	STANDARD NO.	B-11.10

NO	DESCRIPTION OF REVISIONS	MADE BY	DATE
1	Added Fill Detail, revised wall ∡	J. M.	4-92
2			
3			
4			

DESIGN
DRAWN
CHECKED

ZF1:(051020)SB1110.DGN;1 VIEW NAME: BR
07-MAY-1992 14:12

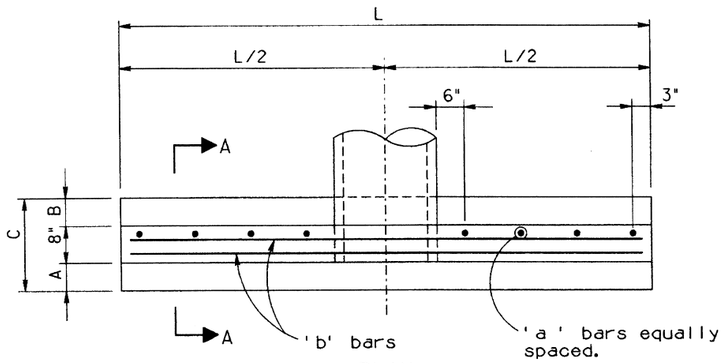

PLAN

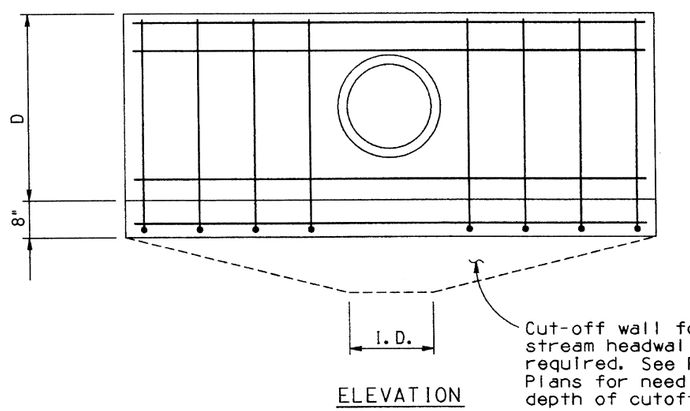

ELEVATION

SINGLE PIPE HEADWALL

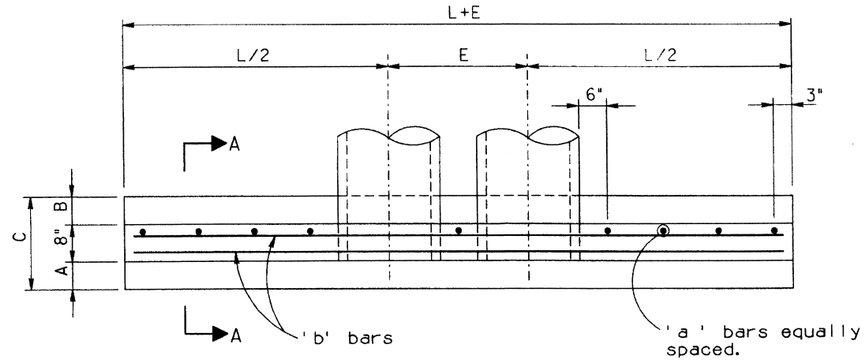

PLAN

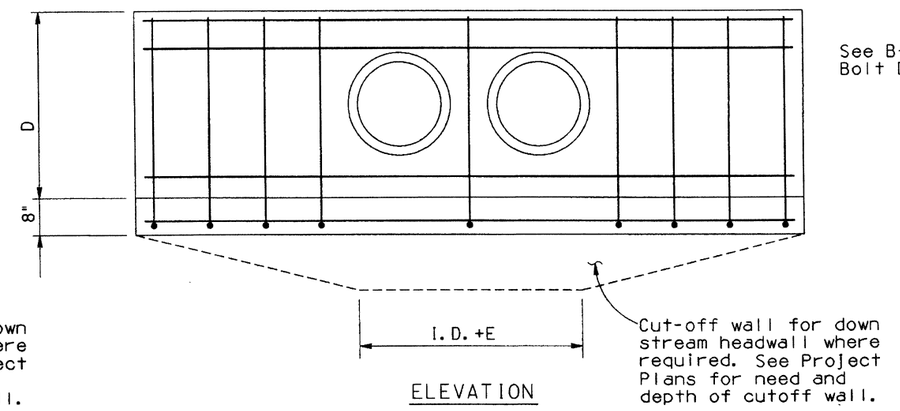

ELEVATION

DOUBLE PIPE HEADWALL

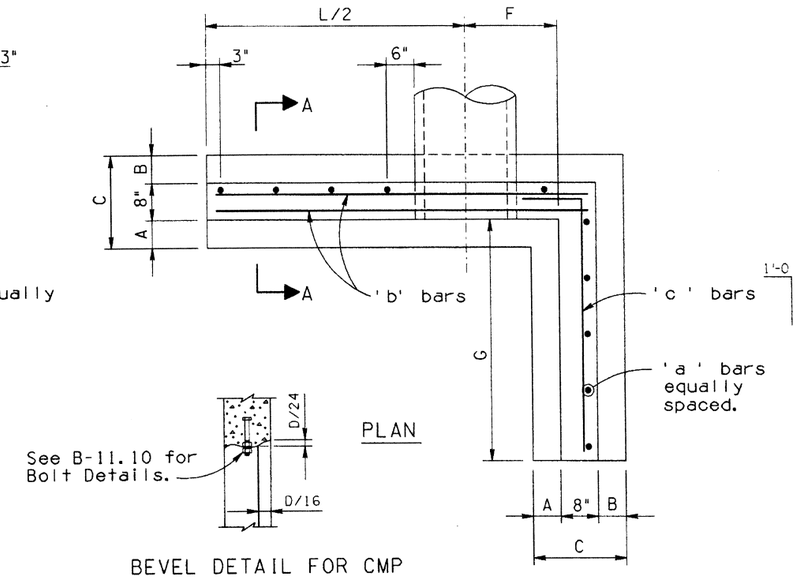

PLAN

BEVEL DETAIL FOR CMP

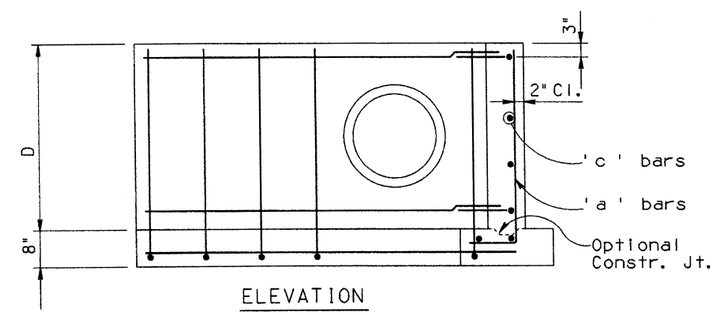

ELEVATION

'L ' HEADWALL

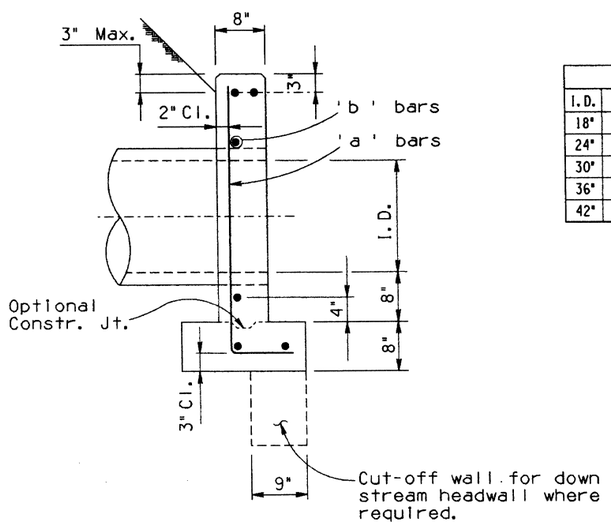

SECTION A-A

Dimensions									
I.D.	A	B	C	D	E	F	G	L	L+E
18"	6"	10"	2'-0	3'-2	2'-6	1'-7	4'-6	9'-6	12'-0
24"	8"	1'-0	2'-4	3'-8	3'-0	2'-1	5'-6	11'-6	14'-6
30"	10"	1'-2	2'-8	4'-2	3'-9	2'-7	6'-6	13'-6	17'-3
36"	1'-0	1'-4	3'-0	4'-8	4'-6	3'-1	7'-6	15'-6	20'-0
42"	1'-2	1'-6	3'-4	5'-2	5'-3	3'-7	8'-6	17'-6	22'-9

* Approximate Quantities								
I.D.	Single Pipe Hdwall.		Double Pipe Hdwall.		Add'l. Pipe Hdwall.		'L' Hdwall.	
	Conc. C.Y.	Reinf. Lbs.	Conc. C.Y.	Reinf. Lbs.	Conc. C.Y.	Reinf. Lbs.	Conc. C.Y.	Reinf. Lbs.
18"	1.2	60	1.4	73	.3	13	1.4	75
24"	1.6	78	2.0	90	.4	15	2.0	100
30"	2.1	97	2.6	116	.5	19	2.6	121
36"	2.7	111	3.4	133	.7	22	3.4	152
42"	3.4	135	3.7	160	.8	26	4.2	180

*Quantities do not include cut-off wall.

Reinforcing															
I.D.	'a ' bars						'b' bars						'c ' bars	
	Single Pipe Headwall		Double Pipe Headwall		'L' Headwall		Single Pipe Headwall		Double Pipe Headwall		'L' Headwall		'L' Headwall	
	No.	Lgth.	No.	Lgth.	No.	Lgth.	No.	Lgth.	No.	Lgth.	No.	Lgth.	No.	Lgth.
18"	8	4'-3	9	4'-3	10	4'-3	6	9'-0	6	11'-6	6	6'-6	5	5'-9
24"	10	5'-0	11	5'-0	12	5'-0	6	11'-0	6	14'-0	6	8'-0	6	6'-9
30"	12	5'-6	13	5'-6	14	5'-6	6	13'-0	6	16'-9	6	9'-6	6	7'-9
36"	12	6'-3	13	6'-3	16	6'-3	6	15'-0	6	19'-6	6	11'-0	7	8'-9
42"	14	7'-0	15	7'-0	18	7'-0	6	17'-0	6	22'-3	6	12'-6	7	9'-9

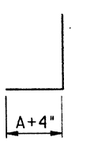

'a ' bars

NOTE:

For General Notes and Chamfer Detail see Std. B-11.10.

Concrete pipe shown. Corrugated metal pipe similar.

High point of headwall shall not project more than 3" above slope.

All concrete shall be Class "B", f'c=2500 psi.

All reinforcing bars are #4.

For 3 or more pipes, add quantities shown for each additional pipe to Double Pipe Headwall quantity. Add one 'a' bar to double pipe headwall total and increase 'b' bar length by Dimension E for each additional pipe.

Dimension E equals pipe spacing.

DESIGN	K.W.	4-92
DRAWN	J.W.	4-92
CHECKED	G.R.	4-92

NO	DESCRIPTION OF REVISIONS	MADE BY	DATE
1			
2			
3			
4			

DESIGN APPROVED

APPROVED FOR DISTRIBUTION

ARIZONA
DEPARTMENT OF TRANSPORTATION
HIGHWAYS DIVISION
STANDARD DRAWINGS

INLET and OUTLET HEADWALLS
18" to 42" PIPES

REVISION

STANDARD NO.
B-11.11

ZF1:@51020JS81111.DGN;2 VIEW NAME:
07-MAY-1992 14:14

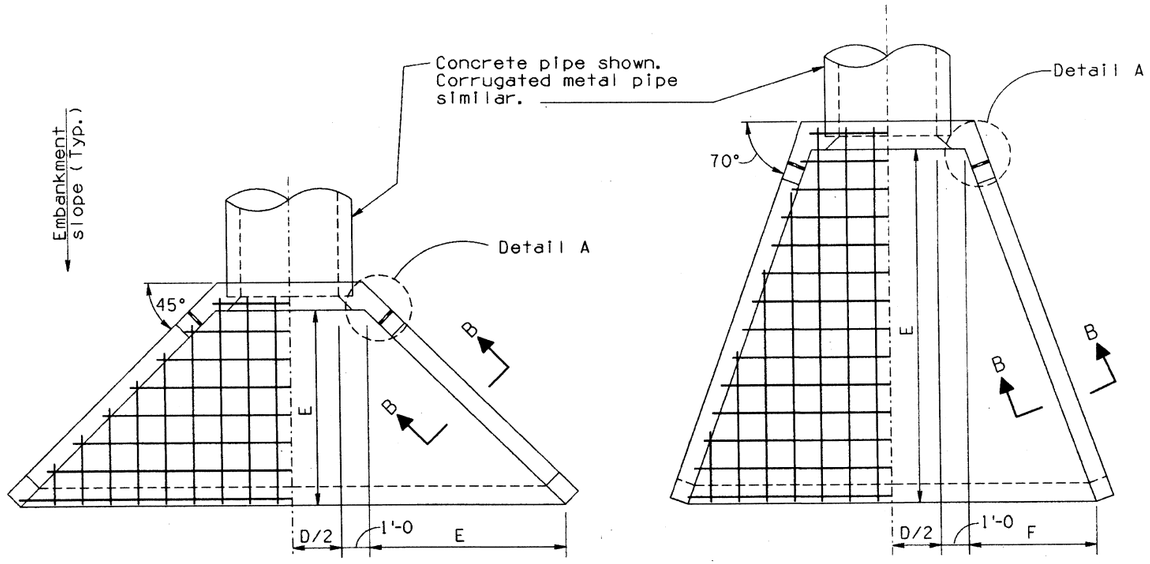

PLAN - INLET HEADWALL

PLAN - OUTLET HEADWALL

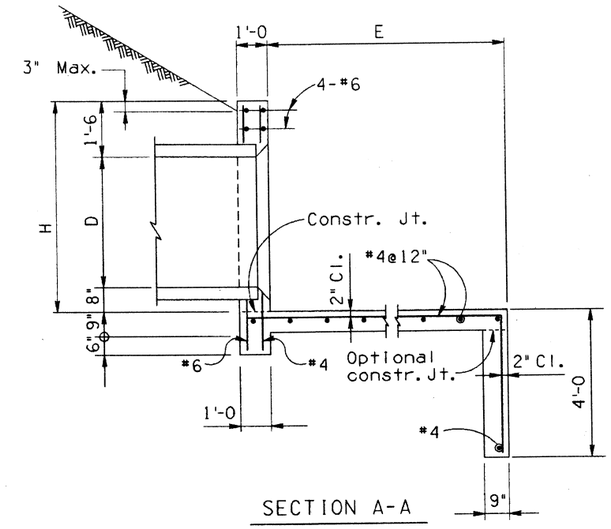

SECTION A-A

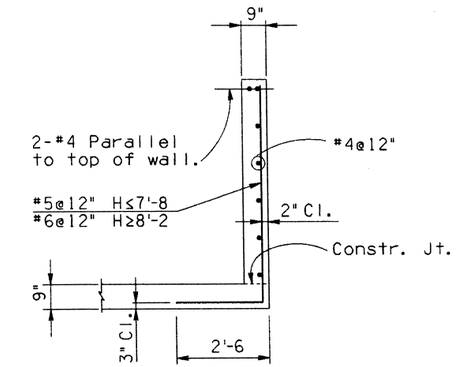

SECTION B-B

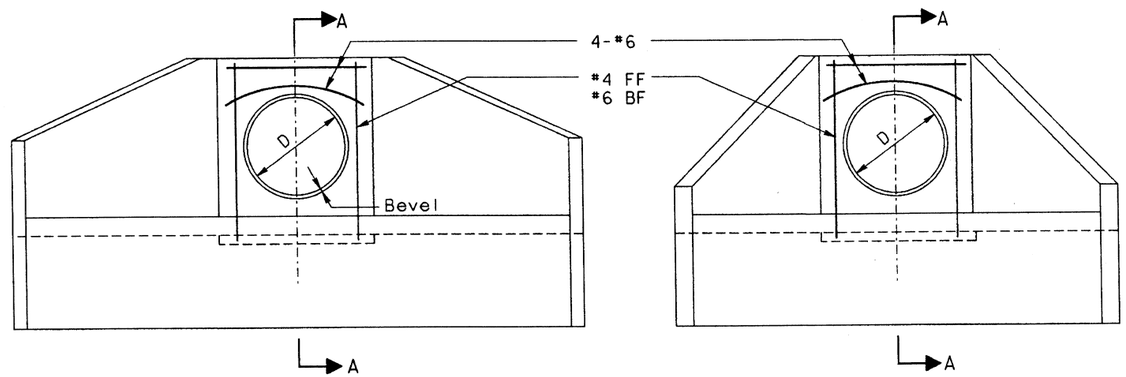

ELEVATION

ELEVATION

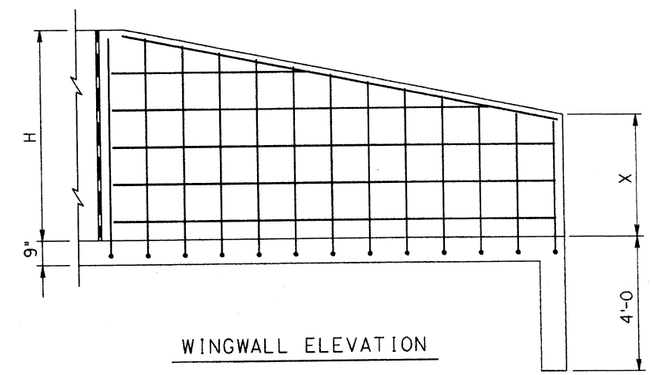

WINGWALL ELEVATION

D	H	INLET END												OUTLET END															
		2:1 Slope				4:1 Slope				6:1 Slope				2:1 Slope					4:1 Slope					6:1 Slope				
		Dimensions		Conc.	Reinf.	Dimensions		Conc.	Reinf.	Dimensions		Conc.	Reinf.	Dimensions			Conc.	Reinf.	Dimensions			Conc.	Reinf.	Dimensions			Conc.	Reinf.
		E	X	C.Y.	LBS.	E	X	C.Y.	LBS.	E	X	C.Y.	LBS.	E	F	X	C.Y.	LBS.	E	F	X	C.Y.	LBS.	E	F	X	C.Y.	LBS.
48"	6'-2	5'-4	3'-0	6.6	395	7'-8	4'-0	9.4	570	9'-0	4'-6	11.2	680	8'-8	3'-2	1'-4	7.0	430	13'-8	5'-0	2'-6	10.8	665	16'-0	5'-10	3'-4	13.0	790
54"	6'-8	5'-10	3'-3	7.6	445	8'-4	4'-4	10.8	630	9'-8	4'-10	12.9	745	9'-4	3'-5	1'-6	7.9	475	14'-8	5'-4	2'-9	12.3	750	17'-4	6'-4	3'-7	15.0	925
60"	7'-2	6'-4	3'-6	8.6	490	9'-0	4'-8	12.2	725	10'-4	5'-3	14.3	835	10'-0	3'-8	1'-8	8.9	510	15'-8	5'-8	3'-0	13.9	830	18'-8	6'-10	3'-10	17.1	1020
66"	7'-8	6'-10	3'-9	9.7	555	9'-8	5'-0	13.8	810	11'-0	5'-7	16.0	940	10'-8	3'-11	1'-10	10.0	570	16'-8	6'-1	3'-3	15.6	915	20'-0	7'-3	4'-2	19.3	1160
72"	8'-2	7'-4	4'-0	10.8	700	10'-4	5'-4	15.5	1010	11'-8	6'-0	17.8	1195	11'-4	4'-2	2'-0	11.1	720	17'-8	6'-5	3'-6	17.4	1155	21'-4	7'-9	4'-5	21.7	1475
78"	8'-8	7'-10	4'-3	12.1	795	11'-0	5'-8	17.2	1140	12'-4	6'-5	19.7	1305	12'-0	4'-4	2'-2	12.2	780	18'-8	6'-10	3'-9	19.7	1315	22'-8	8'-3	4'-9	24.3	1655
84"	9'-2	8'-4	4'-6	13.3	875	11'-8	6'-0	19.0	1250	13'-0	6'-10	21.7	1435	12'-8	4'-7	2'-4	13.5	865	19'-8	7'-2	4'-0	21.3	1430	24'-0	8'-9	5'-0	27.0	1795

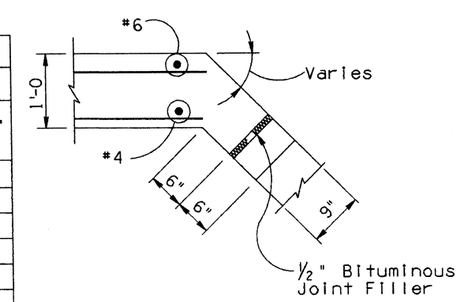

DETAIL A

NOTE:

For General Notes and Chamfer Detail see B-11.10.
All concrete shall be Class "B", f'c = 2500 psi.
Bevel is required only on Inlet Headwalls.
Bell end of concrete pipe may replace bevel.
For CMP use anchor bolts @ 18" as shown on B-11.10.

DESIGN	K.W.	4-92
DRAWN	C.H.	4-92
CHECKED	G.K.	4-92

NO	DESCRIPTION OF REVISIONS	MADE BY	DATE
1			
2			
3			
4			

DESIGN APPROVED

APPROVED FOR DISTRIBUTION

ARIZONA
DEPARTMENT OF TRANSPORTATION
HIGHWAYS DIVISION
STANDARD DRAWINGS

INLET AND OUTLET HEADWALLS
RIGHT ANGLE PIPE CULVERTS
48" - 84" PIPES

REVISION

STANDARD NO.
B-11.12

ZFI:(051020)SB1112.DGN:1 VIEW NAME: BR
07-MAY-1992 14:17

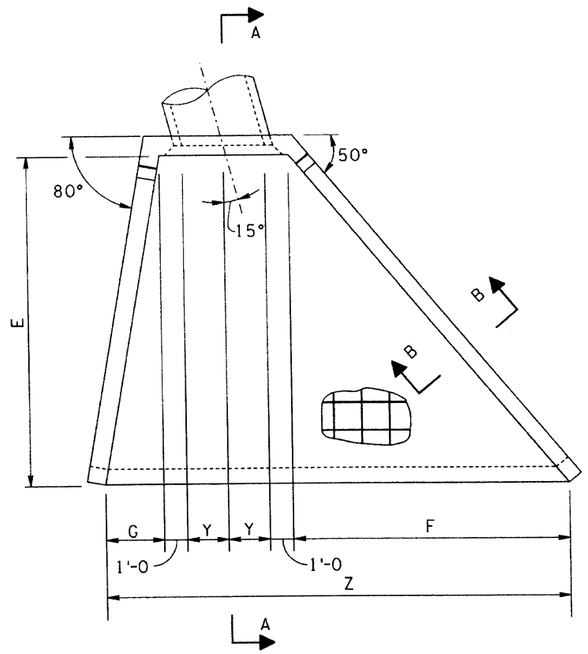

PLAN - 15 SKEW

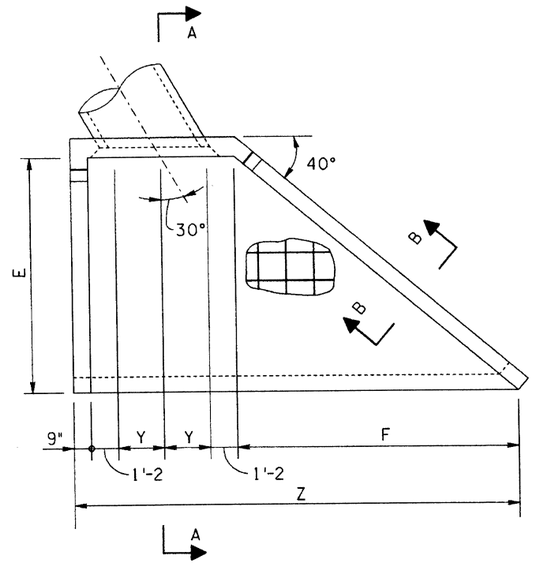

PLAN - 30° SKEW

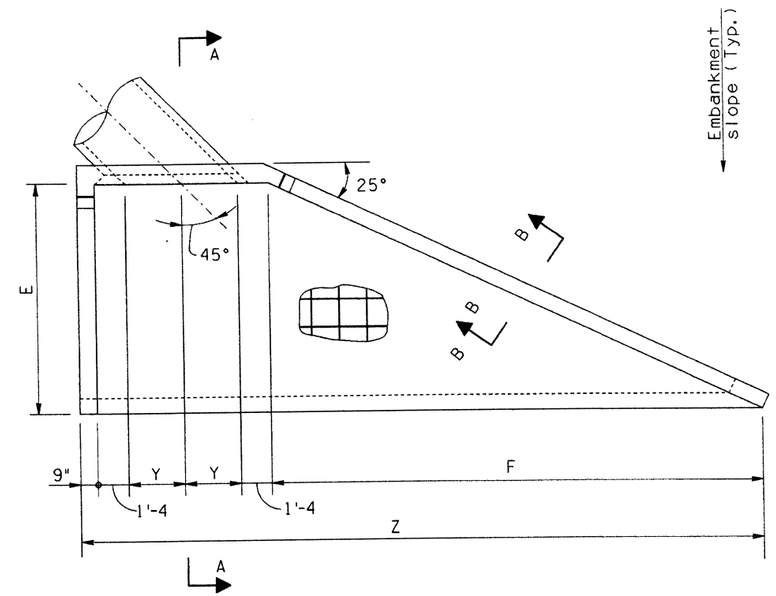

PLAN - 45° SKEW

	D	H	15° Skew Dimensions E	F	G	X	Y	Z	Conc. C.Y.	Reinf. lbs.	30° Skew Dimensions E	F	X	Y	Z	Conc. C.Y.	Reinf. Lbs.	45° Skew Dimensions E	F	X	Y	Z	Conc. C.Y.	Reinf. Lbs.
2:1 Slope	48"	6'-2	8'-2	6'-10 1/4	1'-5 1/4	1'-7	2'-0 7/8	14'-5 1/4	6.6	450	6'-9	8'-0 1/2	2'-3	2'-3 3/4	15'-9	6.8	425	6'-4	13'-7	2'-6	2'-10	22'-8	8.7	520
	54"	6'-8	9'-0	7'-6 5/8	1'-7	1'-8	2'-4	15'-9 5/8	7.5	540	7'-6	8'-11 1/4	2'-5	2'-7 1/8	17'-2 1/2	7.8	515	7'-0	15'-0 1/8	2'-8	3'-2 1/8	24'-9 3/8	9.7	635
	60"	7'-2	9'-10	8'-3	1'-8 3/4	1'-9	2'-7	17'-1 3/4	8.5	625	8'-3	9'-10	2'-6	2'-10 5/8	18'-8 1/4	8.9	605	7'-8	16'-5 1/4	2'-10	3'-6 3/8	26'-11	11.3	755
	66"	7'-8	10'-8	8'-11 3/8	1'-10 5/8	1'-10	2'-10 1/8	18'-6 1/4	9.7	715	9'-0	10'-8 3/4	2'-8	3'-2 1/8	20'-2	10.0	700	8'-4	17'-10 1/2	3'-0	3'-10 5/8	29'-0 3/4	12.8	870
	72"	8'-2	11'-6	9'-7 3/4	2'-0 1/2	1'-11	3'-1 1/4	19'-10 3/4	10.6	800	9'-9	11'-7 3/8	2'-9	3'-5 5/8	21'-7 5/8	11.2	790	9'-0	19'-3 5/8	3'-2	4'-2 7/8	31'-2 3/8	14.3	985
	78"	8'-8	12'-4	10'-4 1/8	2'-4 1/4	2'-0	3'-4 3/8	21'-5 1/8	11.8	890	10'-6	12'-6 1/8	2'-11	3'-9	23'-1 1/8	12.4	880	9'-8	20'-8 3/4	3'-4	4'-7 1/8	33'-4	15.9	1105
	84"	9'-2	13'-2	11'-0 5/8	2'-3 7/8	2'-1	3'-7 1/2	22'-7 1/2	13.0	975	11'-3	13'-4 7/8	3'-0	4'-0 1/2	24'-6 7/8	13.7	970	10'-4	22'-1 7/8	3'-6	4'-11 3/8	35'-5 5/8	17.5	1220
4:1 Slope	48"	6'-2	14'-3	11'-11 1/2	2'-6 1/8	2'-4	2'-0 7/8	20'-7 3/8	11.7	770	11'-0	13'-1 1/4	3'-3	2'-3 3/4	20'-9 3/4	11.0	680	10'-6	22'-6 1/4	3'-3	2'-10	31'-7 1/4	15.5	915
	54"	6'-8	15'-6	13'-0 1/8	2'-8 3/4	2'-6	2'-4	22'-4 7/8	13.4	930	12'-0	14'-3 5/8	3'-6	2'-7 1/8	22'-6 7/8	12.6	815	11'-3	24'-1 1/2	3'-7	3'-2 1/8	33'-10 3/4	16.5	1085
	60"	7'-2	16'-9	14'-0 5/8	2'-11 1/2	2'-9	2'-7	24'-2 1/8	15.2	1085	13'-0	15'-5 7/8	3'-9	2'-10 5/8	24'-4 1/8	14.3	955	12'-0	25'-8 3/4	3'-11	3'-6 3/8	36'-2 1/2	18.5	1255
	66"	7'-8	18'-0	15'-1 1/4	3'-2 1/8	2'-11	2'-10 1/8	25'-11 5/8	17.2	1245	14'-0	16'-8 1/4	4'-0	3'-2 1/8	26'-1 1/2	16.2	1090	12'-9	27'-4 1/8	4'-3	3'-10 5/8	38'-6 3/8	20.7	1425
	72"	8'-2	19'-3	16'-1 7/8	3'-4 3/4	3'-1	3'-1 1/4	27'-9 1/8	19.2	1400	15'-0	17'-10 1/2	4'-3	3'-5 5/8	27'-10 3/4	18.1	1225	13'-6	28'-11 3/8	4'-6	4'-2 7/8	40'-10 1/8	22.8	1595
	78"	8'-8	20'-6	17'-2 3/8	3'-7 3/8	3'-4	3'-4 3/8	29'-6 1/2	21.5	1560	16'-0	19'-0 7/8	4'-6	3'-9	29'-7 7/8	20.1	1365	14'-3	30'-6 3/4	4'-10	4'-7 1/8	43'-2	25.2	1765
	84"	9'-2	21'-9	18'-3	3'-10	3'-6	3'-7 1/2	31'-4	23.7	1715	17'-0	20'-3 1/8	4'-9	4'-0 1/2	31'-5 1/8	22.3	1500	15'-0	32'-2	5'-2	4'-11 3/8	45'-5 1/2	27.7	1935
6:1 Slope	48"	6'-2	18'-0	15'-1 1/4	3'-2 1/8	3'-3	2'-0 7/8	24'-5 1/8	16.1	1040	13'-0	15'-5 7/8	3'-9	2'-3 3/4	23'-2 3/8	13.4	820	12'-0	25'-8 3/4	4'-0	2'-10	34'-9 3/4	17.5	1150
	54"	6'-8	19'-6	16'-4 3/8	3'-5 1/4	3'-5	2'-4	26'-5 5/8	18.4	1250	14'-4	17'-1	4'-1	2'-7 1/8	25'-4 1/4	15.9	1000	13'-0	27'-10 1/2	4'-4	3'-2 1/8	37'-7 3/4	20.1	1370
	60"	7'-2	21'-0	17'-7 1/2	3'-8 3/8	3'-8	2'-7	28'-5 7/8	20.9	1455	15'-8	18'-8	4'-4	2'-10 5/8	27'-6 1/4	18.0	1185	14'-0	30'-0 1/4	4'-8	3'-6 3/8	40'-6	22.8	1585
	66"	7'-8	22'-6	18'-10 1/2	3'-11 5/8	3'-10	2'-10 1/8	30'-6 3/8	23.5	1665	17'-0	20'-3 1/8	4'-8	3'-2 1/8	29'-8 3/8	20.6	1370	15'-0	32'-2	5'-0	3'-10 5/8	43'-4 1/4	25.7	1805
	72"	8'-2	24'-0	20'-1 5/8	4'-2 3/4	4'-1	3'-1 1/4	32'-6 7/8	26.3	1870	18'-4	21'-10 1/8	4'-11	3'-5 5/8	31'-10 3/8	23.2	1550	16'-0	34'-3 3/4	5'-4	4'-2 7/8	46'-2 1/2	28.7	2025
	78"	8'-8	25'-6	21'-4 3/4	4'-6	4'-3	3'-4 3/8	34'-7 1/2	29.2	2080	19'-8	23'-5 1/4	5'-3	3'-9	34'-0 1/4	26.1	1730	17'-0	36'-5 1/2	5'-8	4'-7 1/8	49'-0 3/4	31.9	2240
	84"	9'-2	27'-0	22'-7 7/8	4'-9 1/8	4'-6	3'-7 1/2	36'-8	31.2	2285	21'-0	25'-0 3/8	5'-6	4'-0 1/2	36'-2 3/8	29.0	1915	18'-0	38'-7 1/4	6'-0	4'-11 3/8	51'-11	35.3	2460

NOTE:

For Notes, Wingwall Elevation, Detail A, and Section A-A and B-B see B-11.12.

DESIGN	E.W.	4-92
DRAWN	C.A.	4-92
CHECKED	G.R.	4-92

NO	DESCRIPTION OF REVISIONS	MADE	DATE
1			
2			
3			
4			

DESIGN APPROVED

F. Daniel Davis

APPROVED FOR DISTRIBUTION

ARIZONA
DEPARTMENT OF TRANSPORTATION
HIGHWAYS DIVISION
STANDARD DRAWINGS

INLET AND OUTLET HEADWALLS
SKEWED PIPE CULVERTS
48" - 84" PIPES

REVISION

STANDARD NO.

B-11.13

ZF1:(05102015B1113.DGN;2 VIEW NAME:
07-MAY-1992 14:19

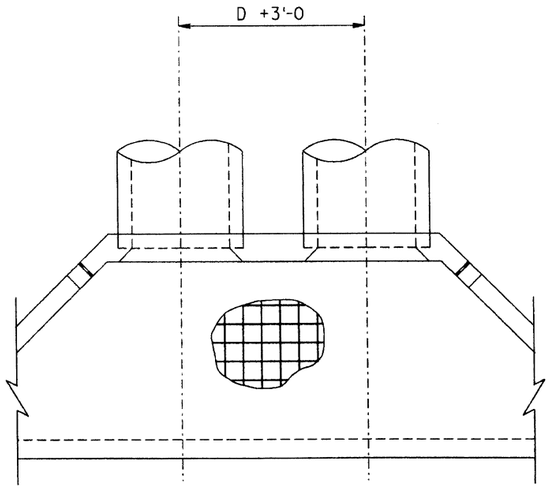

PLAN - INLET HEADWALL

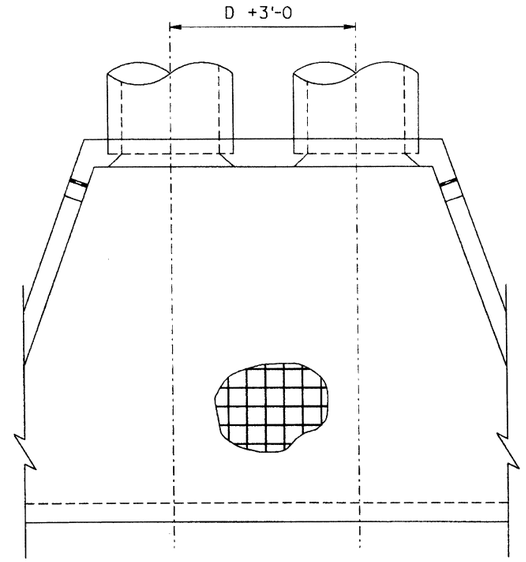

PLAN - OUTLET HEADWALL

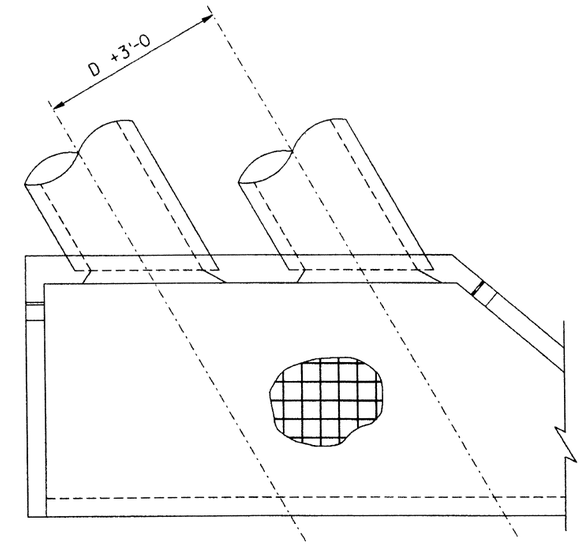

PLAN - SKEW PIPE

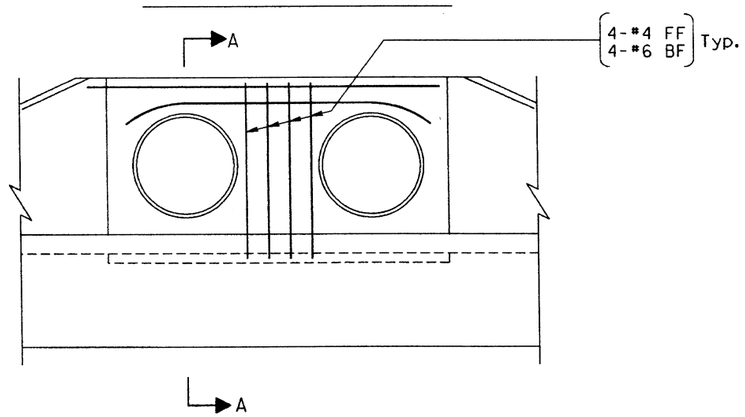

ELEVATION

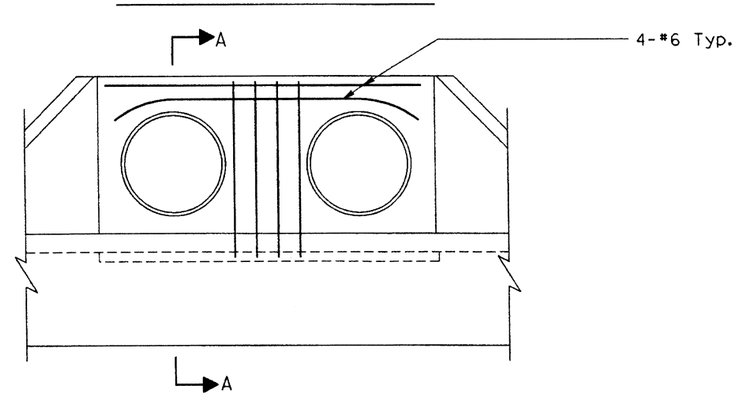

ELEVATION

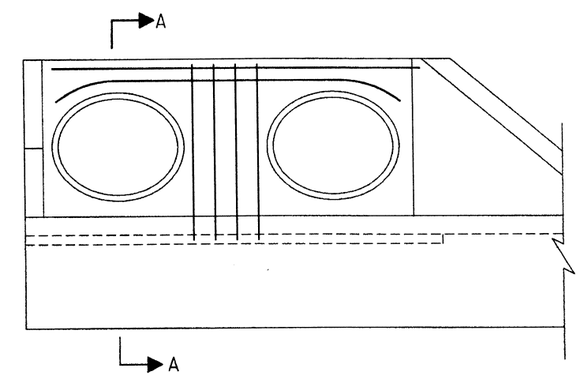

ELEVATION

CONCRETE QUANTITIES PER ADDITIONAL PIPE (C.Y.)

D	Rt. ∢ Inlet			Rt. ∢ Outlet			15°			30°			45°		
	2:1	4:1	6:1	2:1	4:1	6:1	2:1	4:1	6:1	2:1	4:1	6:1	2:1	4:1	6:1
48"	3.1	3.5	3.8	3.7	4.7	5.2	3.8	5.0	5.8	4.0	4.9	5.4	4.7	5.9	6.2
54"	3.5	4.1	4.4	4.2	5.3	5.9	4.3	5.7	6.6	4.4	5.5	6.1	5.3	6.6	7.1
60"	3.9	4.5	4.8	4.7	6.0	6.7	4.8	6.4	7.6	5.0	6.2	6.9	6.0	7.3	7.9
66"	4.3	5.0	5.3	5.2	6.6	7.4	5.3	7.1	8.2	5.6	6.9	7.8	6.6	8.1	8.9
72"	4.8	5.5	5.9	5.8	7.4	8.3	6.0	8.0	9.2	6.2	7.7	8.4	7.3	8.9	9.7
78"	5.2	6.0	6.4	6.3	8.1	9.1	6.6	8.8	10.2	6.8	8.5	9.6	8.1	9.8	10.8
84"	5.7	6.6	7.0	6.9	8.8	10.0	7.2	9.7	11.2	7.5	9.4	10.6	8.8	10.6	11.8

REINF. BAR QUANTITIES PER ADDITIONAL PIPE (LBS.)

D	Rt. ∢ Inlet			Rt. ∢ Outlet			15°			30°			45°		
	2:1	4:1	6:1	2:1	4:1	6:1	2:1	4:1	6:1	2:1	4:1	6:1	2:1	4:1	6:1
48"	180	205	215	210	260	280	210	270	305	220	260	285	240	290	310
54"	200	220	230	230	280	305	240	305	350	245	295	325	270	325	350
60"	220	250	260	260	315	345	260	330	385	265	325	355	300	365	395
66"	235	265	275	275	340	375	280	365	420	285	350	385	330	405	440
72"	255	295	305	305	380	420	310	405	465	320	390	430	355	425	470
78"	275	310	325	320	405	450	335	420	505	345	415	450	395	470	520
84"	300	340	355	355	450	500	370	490	560	370	460	520	425	515	570

NOTES:

For Section A-A and Details not shown see B-11.12 and B-11.13. Multipipe culvert headwall quantities are obtained by multiplying quantity shown in tables by the number of additional pipes and adding to single pipe headwall quantities.

DESIGN	K. W.	3-92
DRAWN	C. H.	4-92
CHECKED	G. K.	4-92

NO	DESCRIPTION OF REVISIONS	MADE BY	DATE
1			
2			
3			
4			

DESIGN APPROVED

APPROVED FOR DISTRIBUTION

ARIZONA
DEPARTMENT OF TRANSPORTATION
HIGHWAYS DIVISION
STANDARD DRAWINGS

MULTIPIPE HEADWALLS
48" -84" PIPES

REVISION

STANDARD NO.
B-11.14

ZF1:(0510203SB1114.DGN)5 VIEW NAME: BR
07-MAY-1992 14:24

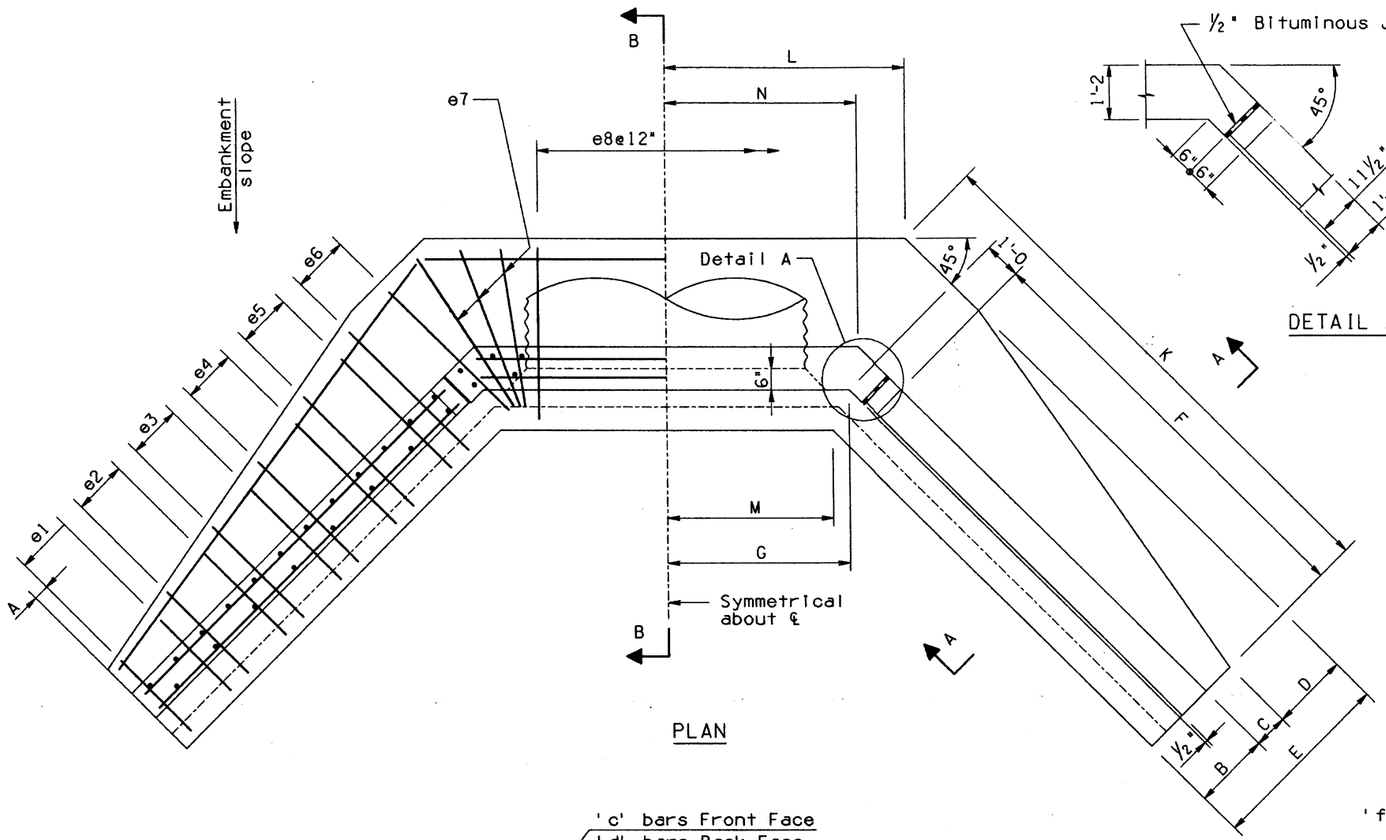

PLAN

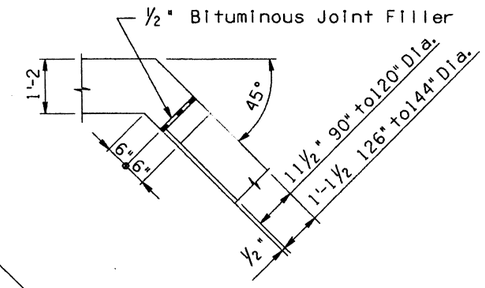

DETAIL A

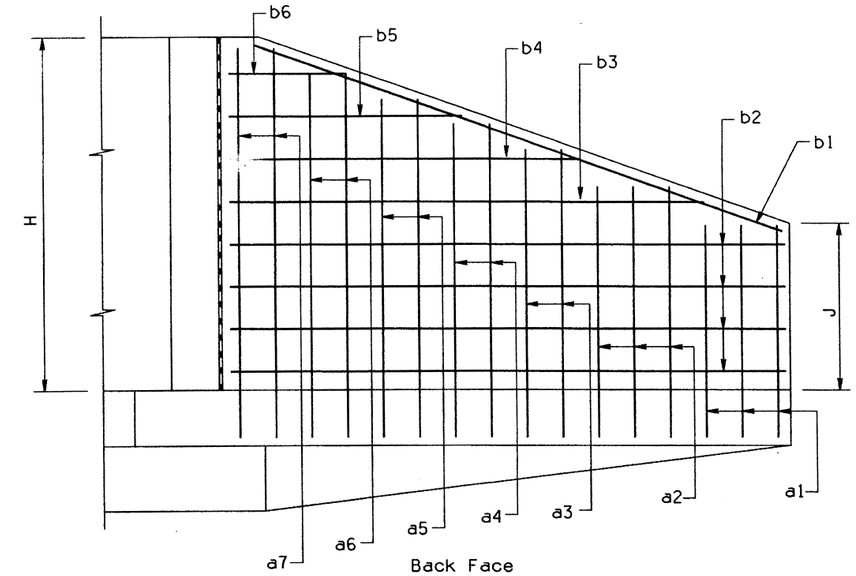

Back Face

WING ELEVATION

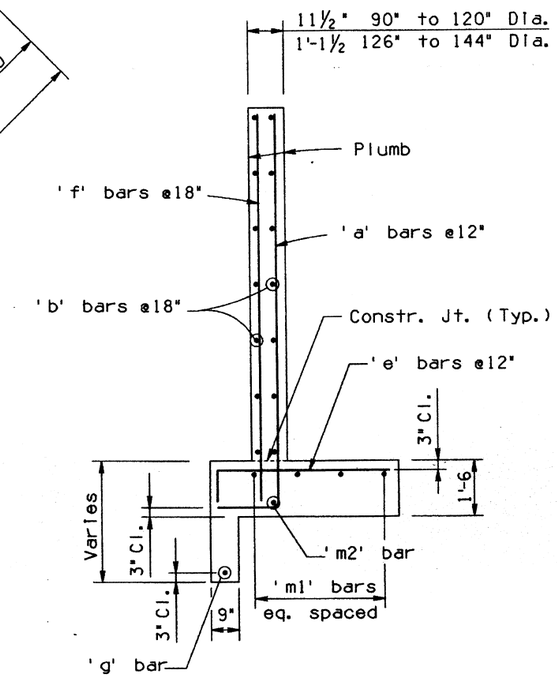

SECTION A-A

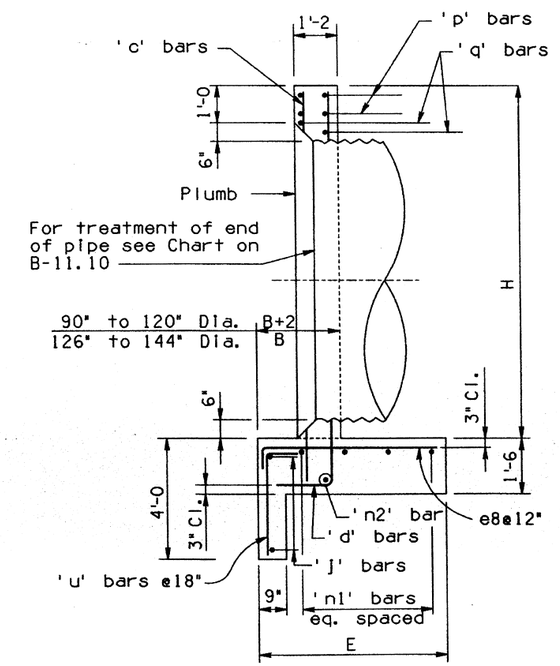

SECTION B-B

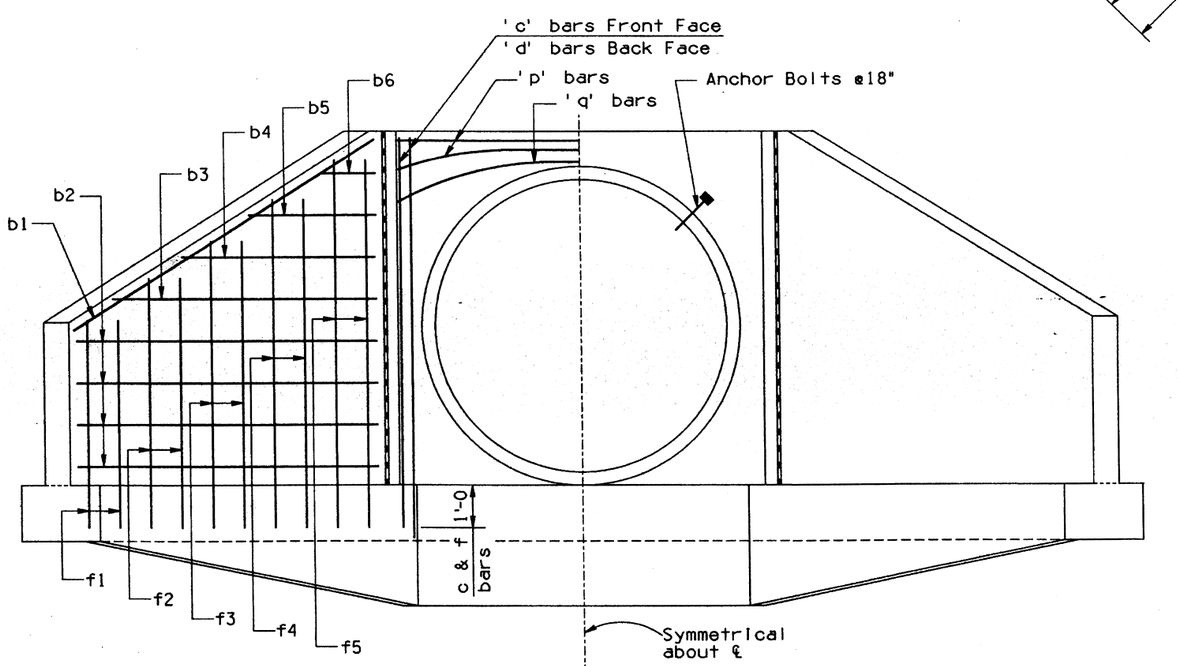

ELEVATION

NOTES:
For general Notes and Misc. Details see B-11.10.
For steel list and bend diagrams see B-12.20, B-12.30 or B-12.40.

DESIGN APPROVED	ARIZONA DEPARTMENT OF TRANSPORTATION HIGHWAYS DIVISION STANDARD DRAWINGS	REVISION
APPROVED FOR DISTRIBUTION	INLET HEADWALLS RIGHT ANGLE PIPE CULVERT	STANDARD NO. B-12.10

Registered Professional Engineer (Civil) 9910 F. DANIEL DAVIS Date Signed 5-6-92 Arizona U.S.A.

DESIGN	K.R.	4-92
DRAWN	J.M. & C.H.	4-92
CHECKED	G.A.	4-92

NO	DESCRIPTION OF REVISIONS	MADE BY	DATE
1			
2			
3			
4			

ZF1:\B5\B2\B5B12\B.DGN;2 VIEW NAME:
07-MAY-1992 14:38

STEEL LIST

Mark	Bend	90" Dia.			96" Dia.			102" Dia.			108" Dia.			114" Dia.			120" Dia.			126" Dia.			132" Dia.			138" Dia.			144" Dia.		
		No	Size	Lgth	No	Size	Lgth	No	Size	Lgth	No	Size	Lgth	No	Size	Lgth	No	Size	Lgth	No	Size	Lgth	No	Size	Lgth	No	Size	Lgth	No	Size	Lgth
a1	A	6	#5	6'-3	6	#5	6'-9	6	#5	7'-0	6	#5	7'-3	6	#5	7'-9	6	#5	8'-3	6	#5	8'-6	6	#5	8'-9	6	#5	9'-3	6	#5	9'-9
a2	A	6	#5	7'-6	6	#5	8'-0	6	#5	8'-3	6	#5	8'-6	6	#5	9'-0	6	#5	9'-6	6	#5	9'-9	6	#5	9'-9	6	#5	10'-6	6	#5	11'-0
a3	A	6	#5	8'-9	6	#5	9'-0	6	#5	9'-3	6	#5	9'-9	6	#5	10'-3	6	#5	10'-6	6	#5	11'-0	6	#5	11'-0	6	#5	11'-6	6	#6	12'-3
a4	A	6	#5	10'-3	6	#5	10'-3	6	#6	10'-6	6	#6	11'-0	6	#6	11'-6	6	#6	11'-9	6	#6	12'-3	6	#6	12'-3	6	#6	12'-9	6	#6	13'-3
a5	A	6	#6	11'-6	4	#6	11'-3	4	#6	11'-9	6	#6	12'-3	6	#7	13'-0	6	#7	13'-0	6	#7	13'-6	6	#7	13'-3	6	#7	14'-0	6	#7	14'-6
a6	A				4	#6	12'-6	4	#7	13'-0	4	#7	13'-6	4	#7	14'-3	6	#7	14'-3	6	#7	14'-9	4	#7	14'-6	4	#7	15'-3	6	#8	15'-9
a7	A																						4	#7	15'-6	4	#8	16'-6	4	#8	17'-0
b1	str	4	#4	15'-6	4	#4	16'-0	4	#4	16'-6	4	#4	17'-3	4	#4	17'-9	4	#4	18'-3	4	#4	18'-9	4	#4	19'-3	4	#4	19'-9	4	#4	20'-3
b2	str	8	#4	14'-6	12	#4	15'-0	12	#4	15'-6	12	#4	16'-0	12	#4	16'-6	12	#4	17'-0	16	#4	17'-6	16	#4	18'-0	16	#4	18'-6	16	#4	19'-0
b3	str	4	#4	13'-6	4	#4	11'-0	4	#4	12'-6	4	#4	14'-0	4	#4	15'-6	4	#4	16'-3	4	#4	13'-6	4	#4	14'-3	4	#4	16'-3	4	#4	18'-0
b4	str	4	#4	9'-9	4	#4	7'-3	4	#4	8'-9	4	#4	10'-3	4	#4	11'-6	4	#4	12'-6	4	#4	9'-9	4	#4	10'-3	4	#4	12'-6	4	#4	14'-0
b5	str	4	#4	5'-9	4	#4	3'-3	4	#4	5'-3	4	#4	6'-3	4	#4	7'-9	4	#4	8'-9	4	#4	5'-9	4	#4	6'-3	4	#4	8'-9	4	#4	10'-0
b6	str	4	#4	2'-0				4	#4	1'-6	4	#4	2'-6	4	#4	4'-0	4	#4	5'-0	4	#4	2'-0	4	#4	2'-6	4	#4	5'-0	4	#4	6'-0
c	str	4	#4	10'-6	4	#4	11'-0	4	#4	11'-6	4	#4	12'-0	4	#4	12'-6	4	#4	13'-0	4	#4	13'-6	4	#4	14'-0	4	#4	14'-6	4	#4	15'-0
d	A	6	#6	12'-3	6	#6	12'-9	6	#7	13'-3	6	#7	13'-9	6	#7	14'-6	6	#7	15'-0	6	#7	15'-6	6	#7	16'-0	6	#8	16'-6	6	#8	17'-0
e1	C	6	#5	3'-0	6	#5	3'-3	6	#5	3'-6	6	#5	3'-9	6	#5	3'-9	6	#5	4'-0	6	#5	4'-3	8	#5	4'-3	8	#5	4'-6	8	#5	4'-9
e2	C	6	#5	3'-9	6	#5	4'-0	6	#5	4'-3	6	#5	4'-6	6	#5	4'-6	6	#5	4'-9	6	#5	5'-0	6	#5	5'-3	6	#5	5'-6	8	#6	5'-9
e3	C	6	#5	4'-3	6	#5	4'-6	6	#5	5'-0	6	#5	5'-3	6	#5	5'-3	6	#5	5'-9	6	#6	6'-0	6	#6	6'-0	6	#6	6'-6	6	#6	6'-9
e4	C	4	#5	5'-0	6	#5	5'-3	6	#5	5'-9	6	#5	6'-0	6	#6	6'-3	6	#6	6'-6	6	#7	7'-6	6	#7	8'-0	6	#7	8'-3	6	#7	8'-9
e5	C	4	#5	5'-9	4	#6	6'-0	4	#6	6'-6	6	#6	6'-9	6	#7	7'-6	6	#7	8'-0	6	#7	8'-6	6	#8	9'-3	6	#8	9'-6	6	#8	10'-0
e6	C	4	#6	6'-6	4	#6	6'-9	4	#7	8'-3	4	#7	8'-6	4	#7	8'-9	6	#8	9'-3	6	#8	9'-6	6	#9	10'-3	6	#9	10'-6	6	#9	11'-0
e7	C	4	#6	6'-6	4	#6	6'-9	4	#7	8'-6	4	#7	8'-9	4	#8	9'-3	4	#8	9'-6	6	#8	10'-0	6	#9	10'-6	6	#9	10'-9	6	#9	11'-3
e8	C	9	#6	6'-6	9	#6	6'-9	10	#7	8'-6	10	#7	8'-9	11	#8	9'-3	11	#8	9'-6	12	#8	10'-0	12	#9	10'-6	13	#9	10'-9	13	#9	11'-3
f1	str	6	#4	4'-6	6	#4	4'-9	6	#4	5'-3	6	#4	5'-6	6	#4	5'-9	6	#4	6'-3	6	#4	6'-6	6	#4	6'-9	6	#4	7'-3	6	#4	7'-6
f2	str	6	#4	6'-3	6	#4	6'-6	6	#4	7'-0	6	#4	7'-6	6	#4	7'-9	6	#4	8'-0	6	#4	8'-6	6	#4	8'-9	6	#4	8'-9	6	#4	9'-3
f3	str	4	#4	8'-0	4	#4	8'-6	6	#4	9'-0	6	#4	9'-3	6	#4	9'-6	6	#4	10'-0	6	#4	10'-3	6	#4	10'-6	6	#4	10'-6	6	#4	11'-3
f4	str	4	#4	9'-9	4	#4	10'-0	4	#4	10'-9	4	#4	11'-3	4	#4	11'-6	6	#4	11'-9	6	#4	12'-3	6	#4	12'-6	4	#4	12'-3	4	#4	12'-9
f5	str																									4	#4	13'-9	4	#4	14'-3
g	str	2	#4	15'-0	2	#4	15'-6	2	#4	16'-0	2	#4	16'-6	2	#4	17'-0	2	#4	17'-6	2	#4	18'-0	2	#4	18'-6	2	#4	19'-0	2	#4	19'-6
j	str	2	#4	8'-9	2	#4	9'-3	2	#4	9'-9	2	#4	10'-3	2	#4	10'-9	2	#4	11'-3	2	#4	11'-9	2	#4	12'-3	2	#4	12'-9	2	#4	13'-3
m1	str	8	#4	17'-9	8	#4	18'-3	10	#4	18'-9	10	#4	19'-3	10	#4	20'-0	10	#4	20'-9	10	#4	21'-6	12	#4	22'-0	12	#4	22'-9	12	#4	23'-3
m2	str	2	#4	17'-9	2	#4	18'-3	2	#4	18'-9	2	#4	19'-3	2	#4	20'-0	2	#4	20'-9	2	#4	21'-6	2	#4	22'-0	2	#4	22'-9	2	#4	23'-3
n1	str	4	#4	14'-3	4	#4	15'-0	5	#4	15'-9	5	#4	16'-6	5	#4	17'-3	5	#4	18'-0	5	#4	18'-9	6	#4	19'-6	6	#4	20'-3	6	#4	21'-0
n2	str	1	#4	14'-3	1	#4	15'-0	1	#4	15'-9	1	#4	16'-6	1	#4	17'-3	1	#4	18'-0	1	#4	18'-9	1	#4	19'-6	1	#4	20'-3	1	#4	21'-0
p	str	4	#5	10'-0	4	#5	10'-6	4	#5	11'-0	4	#5	11'-6	4	#5	12'-0	4	#5	12'-6	4	#5	13'-3	4	#5	13'-9	4	#5	14'-3	4	#5	14'-9
q	str	2	#6	12'-0	2	#6	12'-6	2	#6	13'-0	2	#6	13'-6	2	#6	14'-0	2	#6	14'-6	2	#6	15'-3	2	#6	15'-9	2	#6	16'-3	2	#6	16'-9
u	B	6	#4	5'-0	7	#4	5'-0	7	#4	5'-0	7	#4	5'-0	8	#4	5'-0	8	#4	5'-0	8	#4	5'-0	9	#4	5'-0	9	#4	5'-0	9	#4	5'-0

Pipe Diameter

	90"	96"	102"	108"	114"	120"	126"	132"	138"	144"
A	0'- 6	0'- 3	0'- 6	0'- 3	0'- 6	0'- 3	0'- 6	0'- 3	0'- 6	0'- 3
B	2'- 2	2'- 2	2'- 3	2'- 3	2'- 4	2'- 4	2'- 5	2'- 5	2'- 6	2'- 6
C	1'- 4	1'- 6	1'- 7	1'- 9	1'-10	2'- 0	2'- 1	2'- 3	2'- 4	2'- 6
D	3'- 6	3'- 8	3'-10	4'- 0	4'- 2	4'- 4	4'- 6	4'- 8	4'-10	5'- 0
E	7'- 0	7'- 4	7'- 8	8'- 0	8'- 4	8'- 8	9'- 0	9'- 4	9'- 8	10'- 0
F	14'- 6	15'- 0	15'- 6	16'- 0	16'- 6	17'- 0	17'- 6	18'- 0	18'- 6	19'- 0
G	4'-11	5'- 2	5'- 5	5'- 8	5'-11	6'- 2	6'- 5	6'- 8	6'-11	7'- 2
H	9'- 6	10'- 0	10'- 6	11'- 0	11'- 6	12'- 0	12'- 6	13'- 0	13'- 6	14'- 0
J	3'- 6	3'-10	4'- 2	4'- 6	4'-10	5'- 2	5'- 6	5'-10	6'- 2	6'- 6
K	17'-11	18'- 6⅝	19'- 1⅞	19'- 9½	20'- 4¾	21'- 0½	21'- 8½	22'- 4⅛	22'-11⅜	23'- 7⅛
L	7'- 4	7'- 8⅝	8'- 0⅞	8'- 5½	8'- 9¾	9'- 2½	9'- 7½	10'- 0⅛	10'- 4⅜	10'- 9⅛
M	4'- 5¼	4'- 8¼	4'-10¾	5'- 1¾	5'- 4⅜	5'- 7⅜	5'-10¾	6'- 1¾	6'- 4⅜	6'- 7⅜
N	5'- 2	5'- 5	5'- 8	5'- 11	6'- 2	6'- 5	6'-10¾	7'- 1¾	7'- 4¾	7'- 7¾

QUANTITIES

PIPE Dia.	REINF Lbs.	CONCRETE C.Y.
90"	1315	26.0
96"	1440	28.3
102"	1795	30.6
108"	1930	33.0
114"	2235	35.5
120"	2455	38.2
126"	2690	43.1
132"	3115	46.0
138"	3405	49.0
144"	3745	53.0

NOTE:
Quantities and steel list shown are for one headwall.

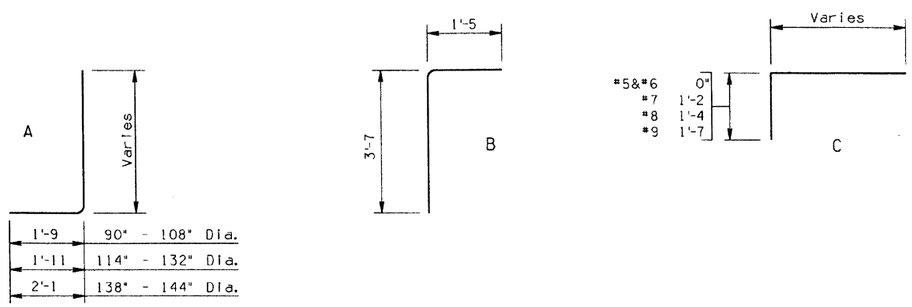

BENDS

DESIGN	K. W.	2-92	NO	DESCRIPTION OF REVISIONS	MADE BY	DATE
DRAWN	J. M.	4-92	1			
CHECKED	G. K.	4-92	2			
			3			
			4			

	DESIGN APPROVED	ARIZONA DEPARTMENT OF TRANSPORTATION HIGHWAYS DIVISION STANDARD DRAWINGS	REVISION 4-92
Registered Professional Engineer (Civil) CERTIFICATE NO. 9910 F. DANIEL DAVIS Expires 6-30-92 Arizona U.S.A.	APPROVED FOR DISTRIBUTION	INLET HEADWALLS RIGHT ANGLE PIPE CULVERT 2:1 SLOPE	STANDARD NO. B-12.20

ZF1:(B51020)SB1220.DGN:4 VIEW NAME:
07-MAY-1992 14:32

STEEL LIST

Mark	Bend	90" Dia.			96" Dia.			102" Dia.			108" Dia.			114" Dia.			120" Dia.			126" Dia.			132" Dia.			138" Dia.			144" Dia.		
		No	Size	Lgth	No	Size	Lgth	No	Size	Lgth	No	Size	Lgth	No	Size	Lgth	No	Size	Lgth	No	Size	Lgth	No	Size	Lgth	No	Size	Lgth	No	Size	Lgth
a1	A	6	#5	8'-6	6	#5	8'-9	8	#5	9'-3	8	#5	9'-6	8	#5	10'-0	8	#5	10'-3	8	#5	10'-9	8	#5	11'-0	8	#5	11'-6	10	#5	11'-9
a2	A	6	#5	9'-0	6	#5	9'-3	6	#5	9'-9	8	#5	10'-3	8	#5	10'-9	8	#5	11'-0	8	#5	11'-6	8	#5	11'-9	8	#6	12'-3	8	#6	12'-9
a3	A	6	#5	9'-9	6	#5	10'-0	6	#5	10'-6	6	#5	11'-0	8	#6	11'-6	8	#6	11'-9	8	#6	12'-3	8	#6	12'-6	8	#6	13'-0	8	#7	13'-6
a4	A	6	#5	10'-3	6	#5	10'-6	6	#6	11'-0	6	#6	11'-6	6	#6	12'-0	8	#7	12'-6	8	#6	13'-0	8	#7	13'-3	8	#7	13'-9	8	#7	14'-3
a5	A	6	#5	11'-0	6	#6	11'-3	6	#6	11'-9	6	#6	12'-3	6	#7	12'-9	6	#7	13'-3	8	#7	13'-9	8	#7	14'-0	8	#7	14'-6	8	#7	15'-0
a6	A	6	#6	11'-6	6	#6	11'-9	6	#6	12'-3	6	#7	12'-9	6	#7	13'-6	6	#7	14'-0	6	#7	14'-6	8	#7	14'-9	8	#7	15'-3	8	#8	16'-0
a7	A	4	#6	12'-3	6	#6	12'-6	6	#7	13'-0	6	#7	13'-6	6	#7	14'-3	6	#7	14'-9	6	#7	15'-3	6	#8	15'-6	8	#8	16'-0	8	#8	16'-9
b1	str	4	#4	19'-3	4	#4	20'-3	4	#4	21'-3	4	#4	22'-3	4	#4	23'-3	4	#4	24'-3	4	#4	25'-3	4	#4	26'-6	4	#4	27'-6	4	#4	28'-6
b2	str	16	#4	19'-0	16	#4	20'-0	16	#4	21'-0	16	#4	22'-0	20	#4	23'-0	20	#4	24'-0	20	#4	25'-0	20	#4	26'-0	20	#4	27'-0	24	#4	28'-0
b3	str	4	#4	12'-6	4	#4	15'-3	4	#4	18'-0	4	#4	21'-0	4	#4	15'-0	4	#4	18'-0	4	#4	21'-0	4	#4	23'-6	4	#4	26'-6	4	#4	21'-3
b4	str	4	#4	4'-6	4	#4	7'-0	4	#4	10'-0	4	#4	12'-9	4	#4	6'-6	4	#4	10'-3	4	#4	13'-0	4	#4	15'-3	4	#4	18'-3	4	#4	13'-0
b5	str							4	#4	2'-0	4	#4	4'-6				4	#4	2'-6	4	#4	5'-0	4	#4	7'-0	4	#4	10'-0	4	#4	5'-0
b6	str																									4	#4	2'-0			
c	str	4	#4	10'-6	4	#4	11'-0	4	#4	11'-6	4	#4	12'-0	4	#4	12'-6	4	#4	13'-0	4	#4	13'-6	4	#4	14'-0	4	#4	14'-6	4	#4	15'-0
d	A	6	#6	12'-3	6	#6	12'-9	6	#7	13'-3	6	#7	13'-9	6	#7	14'-6	6	#7	15'-0	6	#7	15'-6	6	#8	16'-0	6	#8	16'-6	6	#8	17'-0
e1	C	8	#5	3'-9	8	#5	4'-0	8	#5	4'-0	8	#5	4'-3	8	#5	4'-3	8	#5	4'-6	10	#5	4'-9	10	#5	4'-9	10	#5	5'-0	10	#6	5'-3
e2	C	6	#5	4'-0	8	#5	4'-3	8	#5	4'-6	8	#5	4'-9	8	#5	4'-9	8	#5	5'-0	8	#6	5'-3	10	#6	5'-3	10	#6	5'-6	10	#6	5'-9
e3	C	6	#5	4'-3	6	#5	4'-6	8	#5	5'-0	8	#5	5'-0	8	#5	5'-3	8	#6	5'-6	8	#6	5'-9	8	#6	6'-0	10	#7	7'-6	10	#7	7'-9
e4	C	6	#5	4'-9	6	#5	5'-0	6	#5	5'-3	8	#6	5'-6	8	#6	5'-9	8	#6	6'-0	8	#6	6'-3	8	#7	7'-9	8	#7	8'-0	10	#7	8'-6
e5	C	6	#5	5'-0	6	#5	5'-3	6	#5	5'-9	6	#6	6'-0	8	#6	6'-3	8	#6	6'-6	8	#7	7'-9	8	#7	8'-3	8	#7	8'-9	8	#7	9'-3
e6	C	6	#5	5'-6	6	#6	5'-9	6	#6	6'-3	6	#7	8'-0	6	#7	8'-3	8	#7	8'-6	8	#7	8'-9	8	#8	9'-3	8	#8	9'-9	8	#8	10'-0
e7	C	6	#5	5'-9	6	#6	6'-0	6	#6	6'-6	6	#7	8'-3	6	#7	8'-6	6	#7	8'-9	6	#7	9'-0	8	#8	9'-6	8	#8	10'-0	8	#8	10'-3
e8	C	9	#5	5'-9	9	#6	6'-0	10	#6	6'-6	10	#7	8'-3	11	#7	8'-6	11	#7	8'-9	12	#7	9'-0	12	#8	9'-6	13	#8	10'-0	13	#8	10'-3
f1	str	6	#4	6'-9	6	#4	7'-0	6	#4	7'-3	6	#4	7'-6	8	#4	8'-0	8	#4	8'-3	8	#4	8'-6	8	#4	9'-0	8	#4	9'-3	8	#4	9'-6
f2	str	6	#4	7'-6	6	#4	7'-9	6	#4	8'-0	6	#4	8'-6	6	#4	9'-0	8	#4	9'-3	8	#4	9'-9	8	#4	10'-0	8	#4	10'-3	8	#4	10'-6
f3	str	6	#4	8'-6	6	#4	8'-9	6	#4	9'-0	6	#4	9'-3	6	#4	9'-9	6	#4	10'-6	6	#4	10'-9	8	#4	11'-3	8	#4	11'-6	8	#4	11'-9
f4	str	4	#4	9'-3	6	#4	9'-6	6	#4	9'-9	6	#4	10'-3	6	#4	10'-9	6	#4	11'-6	6	#4	11'-9	6	#4	12'-3	8	#4	12'-6	8	#4	13'-0
f5	str	4	#4	10'-3	4	#4	10'-6	6	#4	10'-9	6	#4	11'-3	6	#4	11'-9	6	#4	12'-3	6	#4	12'-9	6	#4	13'-3	6	#4	13'-9	6	#4	14'-3
g	str	2	#4	19'-0	2	#4	20'-0	2	#4	21'-0	2	#4	22'-0	2	#4	23'-0	2	#4	24'-0	2	#4	25'-0	2	#4	26'-0	2	#4	27'-0	2	#4	28'-0
j	str	2	#4	8'-9	2	#4	9'-3	2	#4	9'-9	2	#4	10'-3	2	#4	10'-9	2	#4	11'-3	2	#4	11'-9	2	#4	12'-3	2	#4	12'-9	2	#4	13'-3
m1	str	6	#4	22'-0	8	#4	23'-0	8	#4	24'-0	8	#4	25'-3	10	#4	26'-3	10	#4	27'-6	10	#4	28'-9	10	#4	29'-9	12	#4	31'-0	12	#4	32'-0
m2	str	2	#4	22'-0	2	#4	23'-0	2	#4	24'-0	2	#4	25'-3	2	#4	26'-3	2	#4	27'-6	2	#4	28'-9	2	#4	29'-9	2	#4	31'-0	2	#4	32'-0
n1	str	3	#4	13'-6	4	#4	14'-3	4	#4	15'-0	4	#4	15'-9	5	#4	16'-6	5	#4	17'-3	5	#4	18'-3	5	#4	19'-0	6	#4	19'-9	6	#4	20'-6
n2	str	1	#4	13'-6	1	#4	14'-3	1	#4	15'-0	1	#4	15'-9	1	#4	16'-6	1	#4	17'-3	1	#4	18'-3	1	#4	19'-0	1	#4	19'-9	1	#4	20'-6
p	str	4	#5	10'-0	4	#5	10'-6	4	#5	11'-0	4	#5	11'-6	4	#5	12'-0	4	#5	12'-6	4	#5	13'-3	4	#5	13'-9	4	#5	14'-3	4	#5	14'-9
q	str	2	#6	12'-0	2	#6	12'-6	2	#6	13'-0	2	#6	13'-6	2	#6	14'-0	2	#6	14'-6	2	#6	15'-3	2	#6	15'-9	2	#6	16'-3	2	#6	16'-9
u	B	6	#4	5'-0	7	#4	5'-0	7	#4	5'-0	7	#4	5'-0	8	#4	5'-0	8	#4	5'-0	8	#4	5'-0	9	#4	5'-0	9	#4	5'-0	9	#4	5'-0

Pipe Diameter

	90"	96"	102"	108"	114"	120"	126"	132"	138"	144"
A	0'- 3	0'- 3	0'- 3	0'- 3	0'- 3	0'- 3	0'- 3	0'- 3	0'- 3	0'- 3
B	2'- 2	2'- 2	2'- 3	2'- 3	2'- 4	2'- 4	2'- 5	2'- 5	2'- 6	2'- 6
C	1'-10	2'- 0	2'- 1	2'- 3	2'- 4	2'- 6	2'- 7	2'- 9	2'-10	3'- 0
D	2'- 4	2'- 6	2'- 8	2'-10	3'- 0	3'- 2	3'- 4	3'- 6	3'- 8	3'-10
E	6'- 4	6'- 8	7'- 0	7'- 4	7'- 8	8'- 0	8'- 4	8'- 8	9'- 0	9'- 4
F	19'- 0	20'- 0	21'- 0	22'- 0	23'- 0	24'- 0	25'- 0	26'- 0	27'- 0	28'- 0
G	4'-11	5'- 2	5'- 5	5'- 8	5'-11	6'- 2	6'- 5	6'- 8	6'-11	7'- 2
H	9'- 6	10'- 0	10'- 6	11'- 0	11'- 6	12'- 0	12'- 6	13'- 0	13'- 6	14'- 0
J	5'- 8	6'- 0	6'- 4	6'- 8	7'- 0	7'- 4	7'- 8	8'- 0	8'- 4	8'- 8
K	22'- 1 5/8	23'- 3 3/8	24'- 4 5/8	25'- 6 1/4	26'- 7 1/2	27'- 9 1/8	28'-11 1/4	30'- 0 7/8	31'- 2 1/8	32'- 3 3/4
L	7'- 0 5/8	7'- 5 3/8	7'- 9 5/8	8'- 2 1/4	8'- 6 1/2	8'-11 1/8	9'- 4 1/4	9'- 8 7/8	10'- 1 1/8	10'- 5 3/4
M	4'- 5 1/4	4'- 8 1/4	4'-10 3/4	5'- 1 3/4	5'- 4 3/8	5'- 7 3/8	5'-10 3/4	6'- 1 3/4	6'- 4 3/8	6'- 7 3/8
N	5'- 2	5'- 5	5'- 8	5'- 11	6'- 2	6'- 5	6'-10 3/4	7'- 1 3/4	7'- 4 3/4	7'- 7 3/4

QUANTITIES

PIPE Dia.	REINF Lbs.	CONCRETE C.Y.
90"	1620	32.5
96"	1885	34.7
102"	2165	37.9
108"	2535	41.4
114"	2865	44.9
120"	3150	48.6
126"	3385	55.9
132"	4040	60.1
138"	4535	64.5
144"	4940	69.1

NOTE:
Quantities and steel list shown are for one headwall.

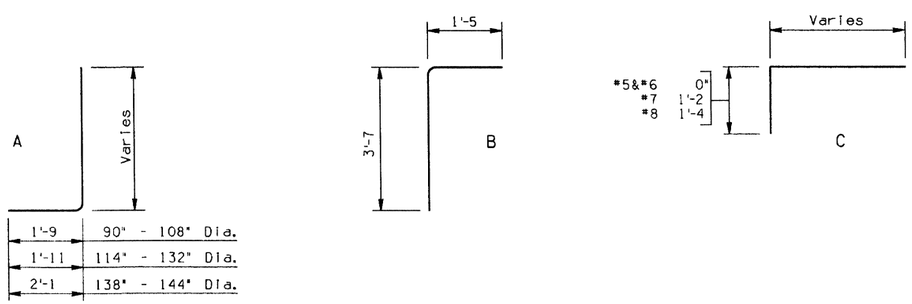

BENDS

DESIGN	K.W.	2-92	NO	DESCRIPTION OF REVISIONS	MADE BY	DATE
DRAWN	J.M. & C.N.	4-92	1			
CHECKED	G.K.	4-92	2			
			3			
			4			

DESIGN APPROVED

APPROVED FOR DISTRIBUTION

ARIZONA
DEPARTMENT OF TRANSPORTATION
HIGHWAYS DIVISION
STANDARD DRAWINGS

INLET HEADWALLS
RIGHT ANGLE PIPE CULVERT
4:1 SLOPE

REVISION 4-92

STANDARD NO. B-12.30

ZFILE051020JSB1230.DGN;1 VIEW NAME: BR
07-MAY-1992 14:34

STEEL LIST

Mark	Bend	90" Dia.			96" Dia.			102" Dia.			108" Dia.			114" Dia.			120" Dia.			126" Dia.			132" Dia.			138" Dia.			144" Dia.		
		No	Size	Lgth	No	Size	Lgth	No	Size	Lgth	No	Size	Lgth	No	Size	Lgth	No	Size	Lgth	No	Size	Lgth	No	Size	Lgth	No	Size	Lgth	No	Size	Lgth
a1	A	8	#5	9'-3	8	#5	9'-9	8	#5	10'-0	10	#5	10'-3	10	#5	10'-9	10	#5	11'-3	10	#5	11'-6	10	#5	11'-9	12	#6	12'-3	12	#6	12'-9
a2	A	8	#5	9'-9	8	#5	10'-3	8	#5	10'-6	8	#5	10'-9	10	#5	11'-3	10	#6	11'-9	10	#5	12'-0	10	#6	12'-3	10	#6	13'-0	12	#6	13'-6
a3	A	8	#5	10'-3	8	#5	10'-9	8	#5	11'-0	8	#6	11'-3	8	#6	12'-0	10	#6	12'-6	10	#6	12'-9	10	#6	13'-0	10	#7	13'-6	12	#7	14'-0
a4	A	6	#5	10'-6	8	#5	11'-0	8	#6	11'-6	8	#6	11'-9	8	#6	12'-6	10	#7	13'-0	10	#6	13'-3	10	#7	13'-6	10	#7	14'-3	10	#7	14'-9
a5	A	6	#5	11'-0	8	#6	11'-6	8	#6	12'-0	8	#6	12'-3	8	#7	13'-0	8	#7	13'-6	10	#7	14'-0	10	#7	14'-3	10	#7	15'-0	10	#8	15'-6
a6	A	6	#6	11'-6	6	#6	12'-0	8	#6	12'-6	8	#7	13'-0	8	#7	13'-9	8	#7	14'-3	8	#7	14'-6	10	#7	14'-9	10	#8	15'-6	10	#8	16'-0
a7	A	6	#6	12'-0	6	#6	12'-6	6	#7	13'-0	8	#7	13'-6	8	#7	14'-3	8	#7	14'-9	8	#7	15'-3	10	#8	15'-6	10	#8	16'-3	10	#8	16'-9
b1	str	4	#4	23'-6	4	#4	25'-0	4	#4	26'-9	4	#4	28'-3	4	#4	29'-9	4	#4	31'-3	4	#4	32'-9	4	#4	34'-3	4	#4	35'-9	4	#4	37'-3
b2	str	16	#4	23'-6	16	#4	25'-0	20	#4	26'-6	20	#4	28'-0	20	#4	29'-6	20	#4	31'-0	20	#4	32'-6	24	#4	34'-0	24	#4	35'-6	24	#4	37'-0
b3	str	4	#4	18'-3	4	#4	23'-6	4	#4	14'-6	4	#4	19'-0	4	#4	22'-6	4	#4	25'-3	4	#4	32'-0	4	#4	23'-0	4	#4	28'-6	4	#4	31'-6
b4	str	4	#4	7'-3	4	#4	11'-0	4	#4	3'-6	4	#4	7'-0	4	#4	8'-6	4	#4	13'-3	4	#4	19'-6	4	#4	9'-6	4	#4	16'-3	4	#4	18'-9
b5	str																4	#4	2'-0	4	#4	7'-0				4	#4	4'-0	4	#4	6'-0
b6	str																														
c	str	4	#4	10'-6	4	#4	11'-0	4	#4	11'-6	4	#4	12'-0	4	#4	12'-6	4	#4	13'-0	4	#4	13'-6	4	#4	14'-0	4	#4	14'-6	4	#4	15'-0
d	A	6	#6	12'-3	6	#6	12'-9	6	#7	13'-3	6	#7	13'-9	6	#7	14'-6	6	#7	15'-0	6	#7	15'-6	6	#8	16'-0	6	#8	16'-6	6	#8	17'-0
e1	C	8	#5	4'-0	10	#5	4'-3	10	#5	4'-6	10	#5	4'-9	10	#5	5'-0	12	#5	5'-0	12	#5	5'-3	12	#5	5'-6	12	#5	5'-6	14	#5	5'-9
e2	C	8	#5	4'-3	8	#5	4'-6	10	#5	4'-9	10	#5	5'-0	10	#5	5'-3	10	#5	5'-3	12	#5	5'-6	12	#5	5'-9	12	#6	6'-0	12	#6	6'-3
e3	C	8	#5	4'-6	8	#5	4'-9	10	#5	5'-0	10	#5	5'-3	10	#5	5'-6	10	#5	5'-9	12	#5	6'-0	12	#5	6'-3	12	#7	7'-9	12	#7	8'-0
e4	C	8	#5	4'-9	8	#5	5'-0	8	#5	5'-3	10	#5	5'-9	10	#6	5'-9	10	#6	6'-3	10	#6	6'-6	12	#6	6'-9	12	#7	8'-3	12	#7	8'-6
e5	C	8	#5	5'-0	8	#5	5'-3	8	#5	5'-6	8	#5	6'-0	10	#6	6'-0	10	#6	6'-6	10	#6	6'-9	10	#6	7'-0	12	#7	8'-9	12	#7	9'-0
e6	C	8	#5	5'-3	8	#5	5'-6	8	#6	5'-9	8	#6	6'-3	10	#7	7'-9	10	#7	8'-3	10	#7	8'-6	10	#7	8'-9	12	#8	9'-3	12	#8	9'-9
e7	C	4	#5	5'-3	4	#5	5'-6	4	#6	5'-9	4	#6	6'-3	4	#7	7'-9	6	#7	8'-3	6	#7	8'-6	6	#7	8'-9	6	#8	9'-3	6	#8	9'-9
e8	C	9	#5	5'-3	9	#5	5'-6	10	#6	5'-9	10	#6	6'-3	11	#7	7'-9	11	#7	8'-3	12	#7	8'-6	12	#7	8'-9	13	#8	9'-3	13	#8	9'-9
f1	str	8	#4	7'-6	8	#4	7'-9	8	#4	8'-3	8	#4	8'-6	8	#4	8'-9	10	#4	9'-3	10	#4	9'-6	10	#4	9'-9	10	#4	10'-3	10	#4	10'-6
f2	str	6	#4	8'-0	8	#4	8'-6	8	#4	9'-0	8	#4	9'-3	8	#4	9'-6	8	#4	10'-0	10	#4	10'-3	10	#4	10'-9	10	#4	11'-3	10	#4	11'-6
f3	str	6	#4	8'-9	6	#4	9'-0	8	#4	9'-6	8	#4	10'-0	8	#4	10'-3	8	#4	10'-9	8	#4	11'-3	10	#4	11'-6	10	#4	12'-0	10	#4	12'-3
f4	str	6	#4	9'-3	6	#4	9'-9	6	#4	10'-3	8	#4	10'-9	8	#4	11'-3	8	#4	11'-9	8	#4	12'-3	8	#4	12'-6	10	#4	13'-0	10	#4	13'-3
f5	str	6	#4	10'-0	6	#4	10'-6	6	#4	11'-0	6	#4	11'-6	8	#4	12'-0	8	#4	12'-6	8	#4	13'-0	8	#4	13'-6	8	#4	14'-0	10	#4	14'-3
g	str	2	#4	24'-0	2	#4	25'-6	2	#4	27'-0	2	#4	28'-6	2	#4	30'-0	2	#4	31'-6	2	#4	33'-0	2	#4	34'-6	2	#4	36'-0	2	#4	37'-6
j	str	2	#4	8'-9	2	#4	9'-3	2	#4	9'-9	2	#4	10'-3	2	#4	10'-9	2	#4	11'-3	2	#4	11'-9	2	#4	12'-3	2	#4	12'-9	2	#4	13'-3
m1	str	6	#4	26'-0	6	#4	27'-9	6	#4	29'-3	8	#4	31'-0	8	#4	32'-6	8	#4	34'-3	8	#4	35'-9	10	#4	37'-6	10	#4	39'-0	10	#4	40'-9
m2	str	2	#4	26'-0	2	#4	27'-9	2	#4	29'-3	2	#4	31'-0	2	#4	32'-6	2	#4	34'-3	2	#4	35'-9	2	#4	37'-6	2	#4	39'-0	2	#4	40'-9
n1	str	3	#4	13'-0	3	#4	13'-9	3	#4	14'-6	4	#4	15'-3	4	#4	16'-0	4	#4	16'-9	4	#4	17'-6	5	#4	18'-6	5	#4	19'-3	5	#4	20'-0
n2	str	1	#4	13'-0	1	#4	13'-9	1	#4	14'-6	1	#4	15'-3	1	#4	16'-0	1	#4	16'-9	1	#4	17'-6	1	#4	18'-6	1	#4	19'-3	1	#4	20'-0
p	str	4	#5	10'-0	4	#5	10'-6	4	#5	11'-0	4	#5	11'-6	4	#5	12'-0	4	#5	12'-6	4	#5	13'-3	4	#5	13'-9	4	#5	14'-3	4	#5	14'-9
q	str	2	#6	12'-0	2	#6	12'-6	2	#6	13'-0	2	#6	13'-6	2	#6	14'-0	2	#6	14'-6	2	#6	15'-3	2	#6	15'-9	2	#6	16'-3	2	#6	16'-9
u	B	6	#4	5'-0	7	#4	5'-0	7	#4	5'-0	7	#4	5'-0	8	#4	5'-0	8	#4	5'-0	8	#4	5'-0	9	#4	5'-0	9	#4	5'-0	9	#4	5'-0

Pipe Diameter

	90"	96"	102"	108"	114"	120"	126"	132"	138"	144"
A	0'- 6	0'- 3	0'- 6	0'- 3	0'- 6	0'- 3	0'- 6	0'- 3	0'- 6	0'- 3
B	2'- 2	2'- 2	2'- 3	2'- 3	2'- 4	2'- 4	2'- 5	2'- 5	2'- 6	2'- 6
C	2'- 4	2'- 6	2'- 7	2'- 9	2'-10	3'- 0	3'- 1	3'- 3	3'- 4	3'- 6
D	1'- 2	1'- 4	1'- 6	1'- 8	1'-10	2'- 0	2'- 2	2'- 4	2'- 6	2'- 8
E	5'- 8	6'- 0	6'- 4	6'- 8	7'- 0	7'- 4	7'- 8	8'- 0	8'- 4	8'- 8
F	23'- 6	25'- 0	26'- 6	28'- 0	29'- 6	31'- 0	32'- 6	34'- 0	35'- 6	37'- 0
G	4'-11	5'- 2	5'- 5	5'- 8	5'-11	6'- 2	6'- 5	6'- 8	6'-11	7'- 2
H	9'- 6	10'- 0	10'- 6	11'- 0	11'- 6	12'- 0	12'- 6	13'- 0	13'- 6	14'- 0
J	6'- 6	6'-10	7'- 2	7'- 6	7'-10	8'- 2	8'- 6	8'-10	9'- 2	9'- 6
K	26'- 4 3/8	28'- 0	29'- 7 1/4	31'- 2 7/8	32'-10 1/8	34'- 5 7/8	36'- 1 7/8	37'- 9 1/2	39'- 4 3/4	41'- 0 1/2
L	6'- 9 3/8	7'- 2	7'- 6 1/4	7'-10 7/8	8'- 3 1/8	8'- 7 7/8	9'- 0 7/8	9'- 5 1/2	9'- 9 3/4	10'- 2 1/2
M	4'- 5 1/4	4'- 8 1/4	4'-10 3/4	5'- 1 3/4	5'- 4 3/8	5'- 7 3/8	5'-10 3/4	6'- 1 3/4	6'- 4 3/8	6'- 7 3/8
N	5'- 2	5'- 5	5'- 8	5'-11	6'- 2	6'- 5	6'-10 3/4	7'- 1 3/4	7'- 4 3/4	7'- 7 3/4

QUANTITIES

PIPE Dia.	REINF Lbs.	CONCRETE C.Y.
90"	1915	36.6
96"	2145	40.6
102"	2530	44.8
108"	2920	49.2
114"	3420	53.8
120"	3885	58.6
126"	4020	68.1
132"	4670	73.7
138"	5765	79.5
144"	6255	85.6

NOTE:
Quantities and steel list shown are for one headwall.

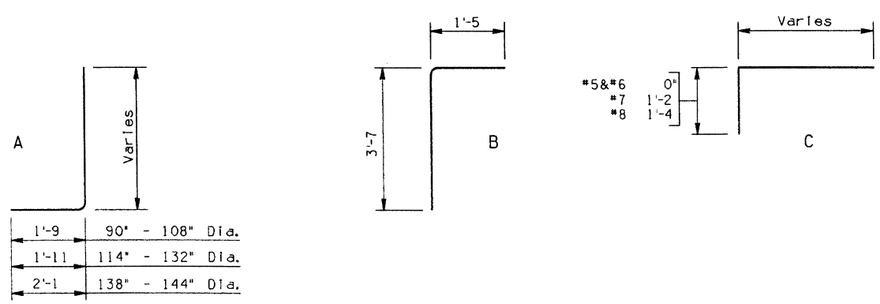

BENDS

DESIGN	K.W.	12-92
DRAWN	J.M. & C.H.	4-92
CHECKED	C.K.	4-92

NO	DESCRIPTION OF REVISIONS	MADE BY	DATE
1			
2			
3			
4			

DESIGN APPROVED

APPROVED FOR DISTRIBUTION

ARIZONA
DEPARTMENT OF TRANSPORTATION
HIGHWAYS DIVISION
STANDARD DRAWINGS

INLET HEADWALLS
RIGHT ANGLE PIPE CULVERT
6:1 SLOPE

REVISION 4-92

STANDARD NO. B-12.40

ZF1:@510203SB1240.DGN:1 VIEW NAME: BR
07-MAY-1992 14:36

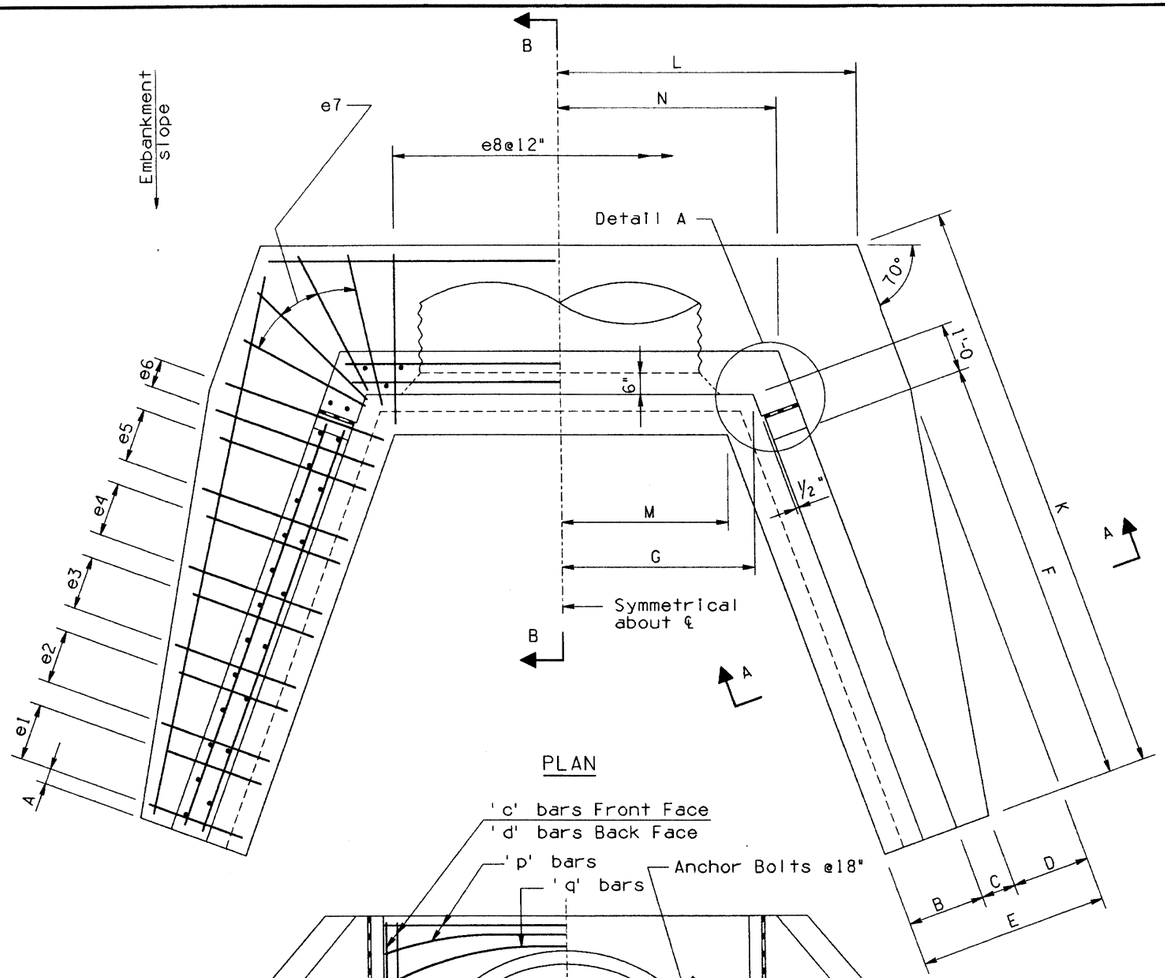

PLAN

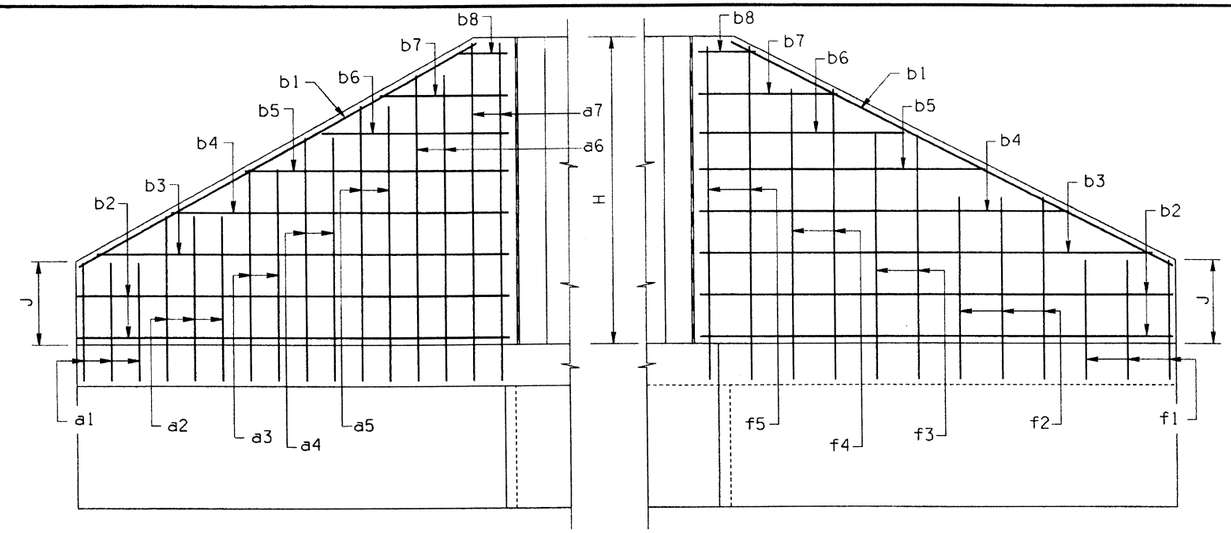

Back Face
WING ELEVATION

Front Face
WING ELEVATION

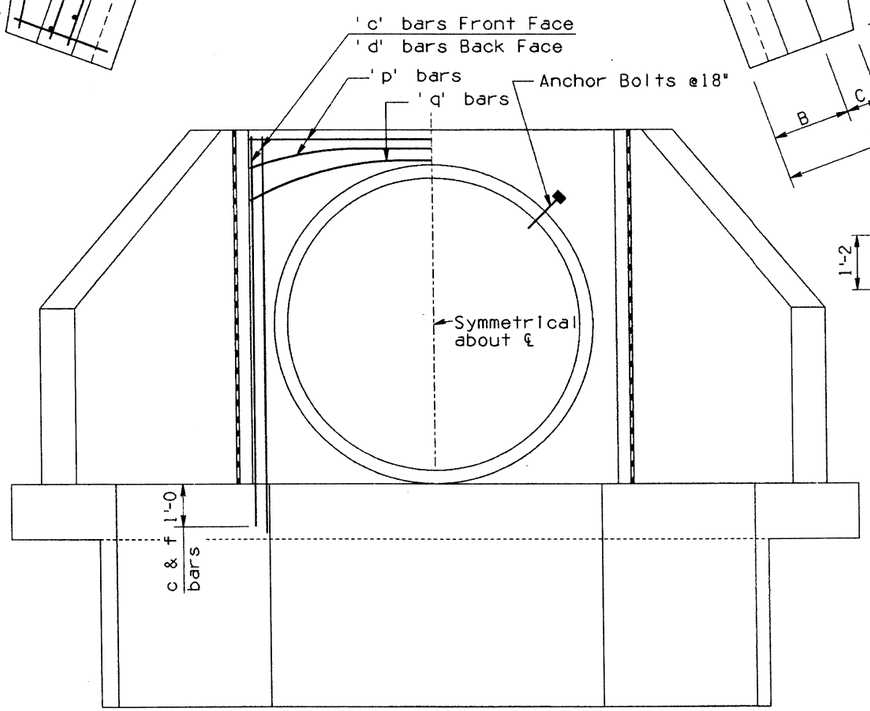

ELEVATION

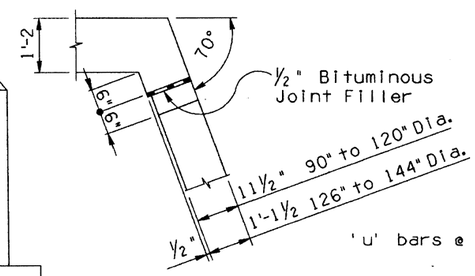

DETAIL A

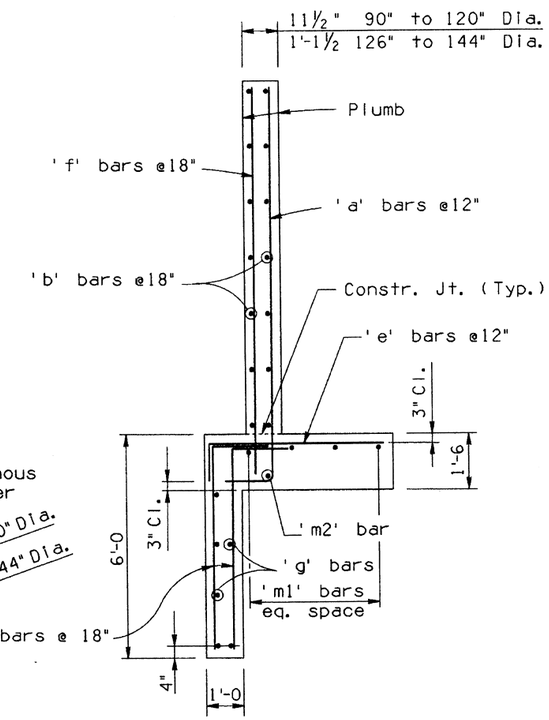

SECTION A-A

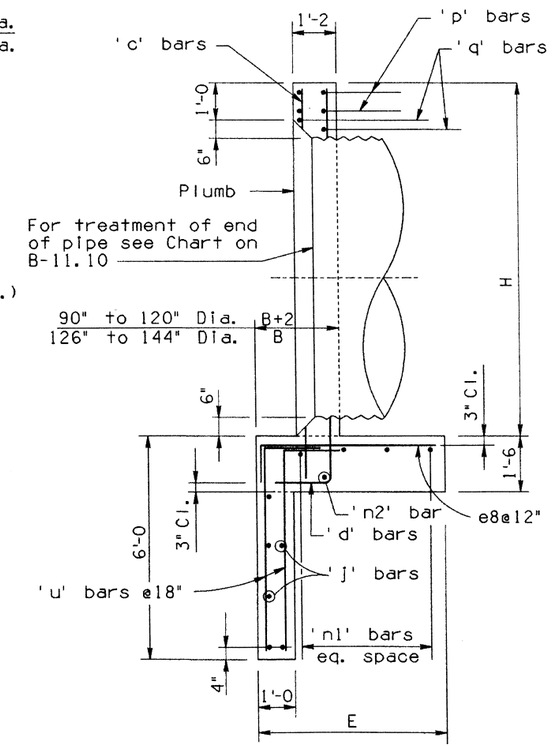

SECTION B-B

NOTES: For General Notes and Misc. Details see B-11.10.
For steel list and bend diagrams see B-12.60, B-12.70 or B-12.80.

DESIGN	K.W.	4-92	NO	DESCRIPTION OF REVISIONS	MADE BY	DATE
DRAWN	J.M. & C.H.	4-92	1			
CHECKED	G.K.	4-92	2			
			3			
			4			

Registered Professional Engineer (Civil) Certificate No. 9910 F. DANIEL DAVIS Date Signed 5-14-92 Arizona U.S.A.	DESIGN APPROVED F. Daniel Davis	ARIZONA DEPARTMENT OF TRANSPORTATION HIGHWAYS DIVISION STANDARD DRAWINGS	REVISION 4-92
	APPROVED FOR DISTRIBUTION	OUTLET HEADWALLS RIGHT ANGLE PIPE CULVERT	STANDARD NO. B-12.50

ZF1:(051020)SB1250.DGN:1 VIEW NAME: BR
07-MAY-1992 14:37

STEEL LIST

Mark	Bend	90" Dia.			96" Dia.			102" Dia.			108" Dia.			114" Dia.			120" Dia.			126" Dia.			132" Dia.			138" Dia.			144" Dia.		
		No	Size	Lgth	No	Size	Lgth	No	Size	Lgth	No	Size	Lgth	No	Size	Lgth	No	Size	Lgth	No	Size	Lgth	No	Size	Lgth	No	Size	Lgth	No	Size	Lgth
a1	A	6	#5	5'-9	4	#5	6'-0	6	#5	6'-0	6	#5	6'-0	6	#5	6'-3	6	#5	6'-6	6	#5	6'-6	6	#5	6'-6	6	#5	6'-9	8	#5	7'-0
a2	A	4	#5	7'-0	4	#5	7'-3	4	#5	7'-3	6	#5	7'-3	6	#5	7'-6	6	#5	7'-9	6	#5	8'-0	6	#5	8'-0	6	#5	8'-3	6	#5	8'-9
a3	A	4	#5	8'-3	4	#5	8'-3	4	#5	8'-3	4	#5	9'-0	6	#5	9'-3	6	#5	9'-3	6	#5	9'-6	6	#5	9'-6	6	#5	9'-9	6	#5	10'-6
a4	A	4	#5	9'-6	4	#5	9'-3	4	#5	9'-6	4	#5	10'-0	4	#5	10'-3	6	#6	10'-6	6	#5	10'-9	6	#5	11'-0	6	#5	11'-3	6	#6	11'-9
a5	A	4	#5	10'-9	4	#5	10'-6	4	#5	10'-6	4	#6	11'-0	4	#6	11'-9	4	#7	12'-0	6	#6	12'-3	6	#6	12'-6	6	#6	13'-0	6	#7	13'-6
a6	A	4	#6	12'-0	4	#6	11'-6	4	#6	11'-9	4	#6	12'-3	4	#7	13'-0	4	#7	13'-6	4	#7	13'-9	6	#7	14'-0	6	#7	14'-6	6	#7	15'-0
a7	A				4	#6	12'-9	4	#6	13'-0	4	#7	13'-6	4	#7	14'-3	4	#7	14'-9	4	#7	15'-3	4	#7	15'-6	6	#8	16'-0	6	#8	16'-6
b1	str	4	#4	13'-6	4	#4	14'-6	4	#4	15'-9	4	#4	16'-9	4	#4	17'-9	4	#4	19'-0	4	#4	20'-0	4	#4	21'-0	4	#4	22'-3	4	#4	23'-3
b2	str	8	#4	12'-0	8	#4	13'-0	8	#4	14'-0	8	#4	15'-0	8	#4	16'-0	8	#4	17'-0	8	#4	18'-0	8	#4	19'-0	8	#4	20'-0	12	#4	21'-0
b3	str	4	#4	10'-3	4	#4	11'-0	4	#4	12'-3	4	#4	13'-6	4	#4	15'-0	4	#4	16'-0	4	#4	17'-0	4	#4	18'-0	4	#4	19'-6	4	#4	17'-3
b4	str	4	#4	7'-6	4	#4	8'-3	4	#4	9'-6	4	#4	10'-6	4	#4	12'-0	4	#4	13'-0	4	#4	14'-0	4	#4	15'-0	4	#4	16'-3	4	#4	14'-3
b5	str	4	#4	4'-6	4	#4	5'-9	4	#4	6'-9	4	#4	7'-9	4	#4	8'-9	4	#4	9'-9	4	#4	11'-0	4	#4	12'-0	4	#4	13'-3	4	#4	11'-0
b6	str	4	#4	1'-9	4	#4	3'-0	4	#4	4'-0	4	#4	4'-9	4	#4	5'-9	4	#4	6'-9	4	#4	7'-9	4	#4	8'-9	4	#4	10'-0	4	#4	8'-0
b7	str							4	#4	1'-3	4	#4	2'-0	4	#4	2'-9	4	#4	3'-9	4	#4	4'-9	4	#4	5'-9	4	#4	7'-0	4	#4	4'-9
b8	str																			4	#4	1'-9	4	#4	2'-9	4	#4	3'-9	4	#4	1'-9
c	str	4	#4	10'-6	4	#4	11'-0	4	#4	11'-6	4	#4	12'-0	4	#4	12'-6	4	#4	13'-0	4	#4	13'-6	4	#4	14'-0	4	#4	14'-6	4	#4	15'-0
d	A	6	#6	12'-3	6	#6	12'-9	6	#6	13'-3	6	#7	13'-9	6	#7	14'-6	6	#7	15'-0	6	#7	15'-6	6	#7	16'-0	6	#8	16'-6	6	#8	17'-0
e1	C	4	#5	2'-9	6	#5	2'-9	6	#5	2'-9	6	#5	2'-9	6	#5	2'-9	6	#5	2'-9	6	#5	2'-9	8	#5	2'-9	8	#5	2'-9	8	#5	2'-9
e2	C	4	#5	3'-3	4	#5	3'-3	6	#5	3'-6	6	#5	3'-6	6	#5	3'-6	6	#5	3'-6	6	#5	3'-9	6	#5	3'-9	8	#5	3'-9	8	#5	4'-0
e3	C	4	#5	4'-0	4	#5	4'-0	4	#5	4'-3	6	#5	4'-3	6	#5	4'-6	6	#5	4'-6	6	#5	4'-9	6	#5	5'-0	6	#5	5'-0	8	#6	5'-3
e4	C	4	#5	4'-6	4	#5	4'-9	4	#5	4'-9	4	#5	5'-3	6	#6	5'-3	6	#6	5'-6	6	#6	5'-9	6	#6	6'-0	6	#6	6'-3	6	#7	7'-6
e5	C	4	#5	5'-0	4	#5	5'-3	4	#5	5'-6	4	#6	6'-0	4	#6	6'-3	6	#7	7'-6	6	#7	8'-0	6	#7	8'-3	6	#7	8'-6	6	#7	8'-6
e6	C	4	#5	5'-9	4	#6	6'-0	4	#6	6'-3	4	#7	8'-0	4	#7	8'-3	4	#7	8'-6	6	#7	9'-0	6	#8	9'-6	6	#8	9'-9	6	#8	10'-0
e7	C	6	#6	6'-0	6	#6	6'-3	6	#6	6'-6	6	#7	8'-3	6	#7	8'-6	6	#7	8'-9	8	#7	9'-3	8	#8	9'-9	8	#8	10'-0	8	#8	10'-3
e8	C	9	#6	6'-0	9	#6	6'-3	10	#6	6'-6	10	#7	8'-3	11	#7	8'-6	11	#7	8'-9	12	#7	9'-3	12	#8	9'-9	13	#8	10'-0	13	#8	10'-3
f1	str	4	#4	4'-6	6	#4	4'-6	4	#4	4'-6	4	#4	4'-9	6	#4	4'-9	6	#4	4'-9	6	#4	5'-0	6	#4	5'-0	6	#4	5'-0	6	#4	5'-3
f2	str	4	#4	6'-3	4	#4	6'-6	4	#4	6'-0	4	#4	6'-3	4	#4	6'-6	6	#4	6'-9	6	#4	7'-0	6	#4	7'-0	6	#4	7'-3	6	#4	7'-6
f3	str	4	#4	7'-9	4	#4	8'-3	4	#4	7'-6	4	#4	8'-0	4	#4	8'-3	4	#4	8'-9	4	#4	9'-0	6	#4	9'-0	6	#4	9'-3	6	#4	9'-6
f4	str	4	#4	9'-6	4	#4	10'-3	4	#4	9'-3	4	#4	9'-6	4	#4	10'-0	4	#4	10'-6	4	#4	10'-9	4	#4	11'-3	6	#4	11'-6	6	#4	11'-9
f5	str							4	#4	10'-9	4	#4	11'-3	4	#4	11'-9	4	#4	12'-3	4	#4	12'-6	4	#4	13'-3	4	#4	13'-9	4	#4	14'-0
g	str	12	#4	12'-3	12	#4	13'-3	12	#4	14'-3	12	#4	15'-3	12	#4	16'-3	12	#4	17'-3	12	#4	18'-3	12	#4	19'-3	12	#4	20'-3	12	#4	21'-3
j	str	6	#4	8'-3	6	#4	8'-9	6	#4	9'-3	6	#4	9'-6	6	#4	10'-0	6	#4	10'-6	6	#4	11'-0	6	#4	11'-6	6	#4	12'-0	6	#4	12'-6
m1	str	8	#4	16'-3	8	#4	17'-6	8	#4	18'-9	10	#4	20'-0	10	#4	21'-3	10	#4	22'-6	10	#4	23'-6	12	#4	24'-9	12	#4	26'-0	12	#4	27'-3
m2	str	2	#4	16'-3	2	#4	17'-6	2	#4	18'-9	2	#4	20'-0	2	#4	21'-3	2	#4	22'-6	2	#4	23'-6	2	#4	24'-9	2	#4	26'-0	2	#4	27'-3
n1	str	4	#4	17'-0	4	#4	18'-0	4	#4	19'-0	5	#4	20'-0	5	#4	20'-9	5	#4	21'-9	5	#4	22'-9	6	#4	23'-9	6	#4	24'-6	6	#4	25'-6
n2	str	1	#4	17'-0	1	#4	18'-0	1	#4	19'-0	1	#4	20'-0	1	#4	20'-9	1	#4	21'-9	1	#4	22'-9	1	#4	23'-9	1	#4	24'-6	1	#4	25'-6
p	str	4	#5	10'-9	4	#5	11'-3	4	#5	11'-9	4	#5	12'-3	4	#5	12'-9	4	#5	13'-3	4	#5	14'-3	4	#5	14'-9	4	#5	15'-3	4	#5	15'-9
q	str	2	#6	12'-9	2	#6	13'-3	2	#6	13'-9	2	#6	14'-3	2	#6	14'-9	2	#6	15'-3	2	#6	16'-3	2	#6	16'-9	2	#6	17'-3	2	#6	17'-9
u	B	46	#4	7'-0	50	#4	7'-0	52	#4	7'-0	56	#4	7'-0	58	#4	7'-0	62	#4	7'-0	64	#4	7'-0	68	#4	7'-0	70	#4	7'-0	74	#4	7'-0

Pipe Diameter

	90"	96"	102"	108"	114"	120"	126"	132"	138"	144"
A	0'- 3	0'- 3	0'- 3	0'- 3	0'- 3	0'- 3	0'- 3	0'- 3	0'- 3	0'- 3
B	2'- 2	2'- 2	2'- 3	2'- 3	2'- 4	2'- 4	2'- 5	2'- 5	2'- 6	2'- 6
C	0'-10	0'-10	0'- 9	0'- 9	0'- 8	0'- 8	0'- 7	0'- 7	0'- 6	0'- 6
D	3'- 4	3'- 8	4'- 0	4'- 4	4'- 8	5'- 0	5'- 4	5'- 8	6'- 0	6'- 4
E	6'- 4	6'- 8	7'- 0	7'- 4	7'- 8	8'- 0	8'- 4	8'- 8	9'- 0	9'- 4
F	12'- 0	13'- 0	14'- 0	15'- 0	16'- 0	17'- 0	18'- 0	19'- 0	20'- 0	21'- 0
G	4'-11	5'- 2	5'- 5	5'- 8	5'-11	6'- 2	6'- 5	6'- 8	6'-11	7'- 2
H	9'- 6	10'- 0	10'- 6	11'- 0	11'- 6	12'- 0	12'- 6	13'- 0	13'- 6	14'- 0
J	3'- 0	3'- 1	3'- 2	3'- 3	3'- 4	3'- 5	3'- 6	3'- 7	3'- 8	3'- 9
K	16'- 7 3/8	17'-10 1/4	19'- 0 3/8	20'- 3 1/8	21'- 5 1/4	23'- 2	23'-11 1/2	25'- 2 3/8	26'- 4 3/8	27'- 7 1/4
L	8'- 6 3/8	9'- 0 1/4	9'- 5 3/8	9'-11 1/8	10'- 4 1/4	10'-10	11'- 4 1/2	11'-10 3/8	12'- 3 3/8	12'- 9 1/4
M	4'- 1 1/4	4'- 4 1/4	4'- 6 1/2	4'- 9 1/2	4'-11 3/4	5'- 2 3/4	5'- 6 1/2	5'- 9 1/2	5'-11 3/4	6'- 2 3/4
N	5'- 6 5/8	5'- 9 5/8	6'- 0 5/8	6'- 3 5/8	6'- 6 5/8	6'- 9 5/8	7'- 2 3/4	7'- 5 3/4	7'- 8 3/4	7'-11 3/4

QUANTITIES

PIPE DIA	REINF lbs	CONCRETE C.Y.
90"	1460	26.4
96"	1635	29.2
102"	1760	32.1
108"	2120	35.1
114"	2365	38.1
120"	2615	41.8
126"	2870	46.8
132"	3215	50.5
138"	3575	54.2
144"	3880	58.1

NOTE:
Quantities and steel list shown are for one headwall.

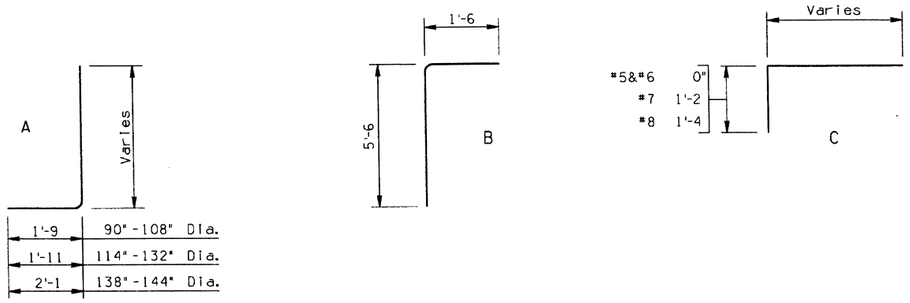

BENDS

DESIGN	K. W.
DRAWN	J. M.
CHECKED	G. K.

NO	DATE	DESCRIPTION OF REVISIONS	MADE BY
1	2-92		
2	4-92		
3	4-92		
4			

DESIGN APPROVED

APPROVED FOR DISTRIBUTION

ARIZONA
DEPARTMENT OF TRANSPORTATION
HIGHWAYS DIVISION
STANDARD DRAWINGS

OUTLET HEADWALLS
RIGHT ANGLE PIPE CULVERT
2:1 SLOPE

REVISION

STANDARD NO.
B-12.60

ZF1:(051020)SB1260.DGN:1 VIEW NAME:
07-MAY-1992 14:39

STEEL LIST

Mark	Bend	90" Dia.			96" Dia.			102" Dia.			108" Dia.			114" Dia.			120" Dia.			126" Dia.			132" Dia.			138" Dia.			144" Dia.		
		No	Size	Lgth	No	Size	Lgth	No	Size	Lgth	No	Size	Lgth	No	Size	Lgth	No	Size	Lgth	No	Size	Lgth	No	Size	Lgth	No	Size	Lgth	No	Size	Lgth
a1	A	8	#5	6'-9	8	#5	7'-0	8	#5	7'-3	8	#5	7'-6	8	#5	8'-0	8	#5	8'-3	10	#5	8'-6	10	#5	8'-9	10	#5	9'-3	10	#5	9'-6
a2	A	8	#5	7'-6	8	#5	8'-0	8	#5	8'-3	8	#5	8'-6	8	#5	9'-0	8	#5	9'-3	8	#5	9'-6	10	#5	9'-9	10	#5	10'-6	10	#5	10'-6
a3	A	6	#5	8'-6	8	#5	9'-0	8	#5	9'-3	8	#5	9'-6	8	#5	10'-0	8	#5	10'-3	8	#5	10'-6	8	#5	11'-0	10	#5	11'-6	10	#6	11'-9
a4	A	6	#5	9'-3	6	#5	9'-9	8	#5	10'-0	8	#5	10'-6	8	#5	11'-0	8	#5	11'-3	8	#5	11'-9	8	#6	12'-0	8	#6	12'-9	10	#6	13'-0
a5	A	6	#5	10'-3	6	#5	10'-9	6	#6	11'-0	8	#6	11'-6	8	#6	12'-0	8	#6	12'-3	8	#6	12'-9	8	#7	13'-3	8	#7	14'-0	8	#7	14'-3
a6	A	6	#5	11'-3	6	#6	11'-6	6	#6	12'-0	6	#7	12'-6	8	#7	13'-3	8	#7	13'-6	8	#7	14'-0	8	#7	14'-3	8	#7	15'-0	8	#8	15'-3
a7	A	6	#6	12'-0	6	#6	12'-6	6	#7	13'-0	6	#7	13'-6	6	#7	14'-3	8	#7	14'-6	8	#7	15'-0	8	#8	15'-6	8	#8	16'-3	8	#8	16'-6
b1	str	4	#4	22'-6	4	#4	23'-6	4	#4	24'-9	4	#4	25'-9	4	#4	26'-9	4	#4	27'-9	4	#4	28'-9	4	#4	29'-9	4	#4	30'-9	4	#4	32'-0
b2	str	8	#4	22'-0	12	#4	23'-0	12	#4	24'-0	12	#4	25'-0	12	#4	26'-0	12	#4	27'-0	12	#4	28'-0	16	#4	29'-0	16	#4	30'-0	16	#4	31'-0
b3	str	4	#4	21'-0	4	#4	17'-6	4	#4	19'-0	4	#4	21'-6	4	#4	23'-3	4	#4	25'-6	4	#4	27'-6	4	#4	23'-0	4	#4	25'-9	4	#4	28'-0
b4	str	4	#4	15'-3	4	#4	11'-6	4	#4	13'-3	4	#4	15'-6	4	#4	17'-3	4	#4	19'-6	4	#4	21'-3	4	#4	17'-0	4	#4	19'-9	4	#4	22'-0
b5	str	4	#4	9'-3	4	#4	5'-6	4	#4	7'-3	4	#4	9'-6	4	#4	11'-3	4	#4	13'-6	4	#4	15'-3	4	#4	11'-0	4	#4	14'-0	4	#4	16'-0
b6	str	4	#4	3'-6				4	#4	1'-6	4	#4	3'-6	4	#4	5'-3	4	#4	7'-6	4	#4	9'-0	4	#4	5'-0	4	#4	8'-0	4	#4	10'-0
b7	str																4	#4	1'-6	4	#4	3'-0				4	#4	2'-3	4	#4	4'-0
b8	str																														
c	str	4	#4	10'-6	4	#4	11'-0	4	#4	11'-6	4	#4	12'-0	4	#4	12'-6	4	#4	13'-0	4	#4	13'-6	4	#4	14'-0	4	#4	14'-6	4	#4	15'-0
d	A	6	#6	12'-3	6	#6	12'-9	6	#7	13'-3	6	#7	13'-9	6	#7	14'-6	6	#7	15'-0	6	#7	15'-6	6	#8	16'-0	6	#8	16'-6	6	#8	17'-0
e1	C	8	#5	2'-9	8	#5	2'-9	8	#5	3'-0	10	#5	3'-3	10	#5	3'-3	10	#5	3'-6	10	#5	3'-9	10	#5	3'-9	10	#5	4'-0	12	#5	4'-3
e2	C	8	#5	3'-3	8	#5	3'-6	8	#5	3'-9	8	#5	4'-0	10	#5	4'-0	10	#5	4'-3	10	#5	4'-6	10	#5	4'-6	10	#5	4'-9	10	#5	5'-0
e3	C	8	#5	4'-0	8	#5	4'-0	8	#5	4'-3	8	#5	4'-6	8	#5	4'-6	10	#5	5'-0	10	#5	5'-3	10	#5	5'-3	10	#6	5'-6	10	#6	5'-9
e4	C	8	#5	4'-6	8	#5	4'-9	8	#5	5'-0	8	#5	5'-3	8	#5	5'-3	8	#5	5'-6	10	#6	6'-0	10	#6	6'-0	10	#6	6'-3	10	#6	6'-6
e5	C	6	#5	5'-3	8	#5	5'-3	8	#5	5'-6	8	#5	5'-9	8	#6	6'-0	8	#6	6'-3	8	#6	6'-9	10	#6	7'-0	10	#7	8'-3	10	#7	8'-6
e6	C	6	#5	5'-9	6	#5	6'-0	8	#6	6'-3	8	#6	6'-6	8	#7	8'-0	8	#7	8'-3	8	#7	8'-6	8	#7	8'-9	10	#8	9'-3	10	#8	9'-6
e7	C	6	#5	5'-9	6	#5	6'-0	6	#6	6'-3	6	#6	6'-6	6	#7	8'-3	6	#7	8'-6	8	#7	8'-9	8	#7	9'-0	8	#8	9'-6	8	#8	9'-9
e8	C	9	#5	5'-9	9	#5	6'-0	10	#6	6'-3	10	#6	6'-6	11	#7	8'-3	11	#7	8'-6	12	#7	8'-9	12	#7	9'-0	13	#8	9'-6	13	#8	9'-9
f1	str	6	#4	5'-0	8	#4	5'-3	8	#4	5'-6	8	#4	5'-9	8	#4	6'-0	8	#4	6'-3	8	#4	6'-6	8	#4	6'-9	8	#4	7'-0	10	#4	7'-3
f2	str	6	#4	6'-3	6	#4	6'-6	6	#4	6'-9	8	#4	7'-0	8	#4	7'-6	8	#4	7'-9	8	#4	8'-0	8	#4	8'-3	8	#4	8'-6	8	#4	9'-0
f3	str	6	#4	7'-3	6	#4	7'-9	6	#4	8'-3	6	#4	8'-6	8	#4	8'-9	8	#4	9'-3	8	#4	9'-6	8	#4	9'-9	8	#4	10'-3	8	#4	10'-6
f4	str	6	#4	8'-6	6	#4	9'-0	6	#4	9'-3	6	#4	9'-9	6	#4	10'-3	6	#4	10'-9	8	#4	11'-3	8	#4	11'-6	8	#4	11'-9	8	#4	12'-3
f5	str	6	#4	9'-9	6	#4	10'-3	6	#4	10'-9	6	#4	11'-3	6	#4	11'-9	6	#4	12'-3	6	#4	12'-9	8	#4	13'-0	8	#4	13'-6	8	#4	14'-0
g	str	12	#4	22'-3	12	#4	23'-3	12	#4	24'-3	12	#4	25'-3	12	#4	26'-3	12	#4	27'-3	12	#4	28'-3	12	#4	29'-3	12	#4	30'-3	12	#4	31'-3
j	str	6	#4	8'-3	6	#4	8'-9	6	#4	9'-3	6	#4	9'-6	6	#4	10'-0	6	#4	10'-6	6	#4	11'-0	6	#4	11'-6	6	#4	12'-0	6	#4	12'-6
m1	str	8	#4	26'-3	8	#4	27'-6	8	#4	28'-6	10	#4	29'-9	10	#4	31'-0	10	#4	32'-3	10	#4	33'-3	12	#4	34'-6	12	#4	35'-9	12	#4	37'-0
m2	str	2	#4	26'-3	2	#4	27'-6	2	#4	28'-6	2	#4	29'-9	2	#4	31'-0	2	#4	32'-3	2	#4	33'-3	2	#4	34'-6	2	#4	35'-9	2	#4	37'-0
n1	str	4	#4	17'-0	4	#4	17'-9	4	#4	18'-6	5	#4	19'-3	5	#4	20'-3	5	#4	21'-3	5	#4	22'-3	6	#4	23'-0	6	#4	24'-0	6	#4	25'-0
n2	str	1	#4	17'-0	1	#4	17'-9	1	#4	18'-6	1	#4	19'-3	1	#4	20'-3	1	#4	21'-3	1	#4	22'-3	1	#4	23'-0	1	#4	24'-0	1	#4	25'-0
p	str	4	#5	10'-9	4	#5	11'-3	4	#5	11'-9	4	#5	12'-3	4	#5	12'-9	4	#5	13'-3	4	#5	14'-3	4	#5	14'-9	4	#5	15'-3	4	#5	15'-9
q	str	2	#6	12'-9	2	#6	13'-3	2	#6	13'-9	2	#6	14'-3	2	#6	14'-9	2	#6	15'-3	2	#6	16'-3	2	#6	16'-9	2	#6	17'-3	2	#6	17'-9
u	B	74	#4	7'-0	78	#4	7'-0	80	#4	7'-0	84	#4	7'-0	86	#4	7'-0	90	#4	7'-0	92	#4	7'-0	96	#4	7'-0	98	#4	7'-0	102	#4	7'-0

Pipe Diameter

	90"	96"	102"	108"	114"	120"	126"	132"	138"	144"
A	0'- 3	0'- 3	0'- 3	0'- 3	0'- 3	0'- 3	0'- 3	0'- 3	0'- 3	0'- 3
B	2'- 2	2'- 2	2'- 3	2'- 3	2'- 4	2'- 4	2'- 5	2'- 5	2'- 6	2'- 6
C	0'-10	1'- 0	1'- 1	1'- 3	1'- 4	1'- 6	1'- 7	1'- 9	1'-10	2'- 0
D	3'- 2	3'- 4	3'- 5	3'- 6	3'- 8	3'-10	3'-11	4'- 1	4'- 2	4'- 4
E	6'- 2	6'- 6	6'- 9	7'- 0	7'- 4	7'- 8	8'-0	8'- 3	8'- 6	8'-10
F	22'- 0	23'- 0	24'- 0	25'- 0	26'- 0	27'- 0	28'- 0	29'- 0	30'- 0	31'- 0
G	4'-11	5'- 2	5'- 5	5'- 8	5'-11	6'- 2	6'- 5	6'- 8	6'-11	7'- 2
H	9'- 6	10'- 0	10'- 6	11'- 0	11'- 6	12'- 0	12'- 6	13'- 0	13'- 6	14'- 0
J	4'- 0	4'- 3	4'- 6	4'- 9	5'- 0	5'- 3	5'- 6	5'- 9	6'- 0	6'- 3
K	26'- 6	27'- 8 7/8	28'-10 1/4	30'- 0 3/8	31'- 2 3/8	32'- 5 1/4	33'- 8	34'-10 7/8	36'- 0 1/4	37'- 3
L	8'- 5	8'-10 7/8	9'- 3 1/4	9'- 8 3/8	10'- 1 3/8	10'- 7 1/4	11'- 1	11'- 6 7/8	11'-11 1/4	12'- 5
M	4'- 1 1/4	4'- 4 1/4	4'- 6 1/2	4'- 9 1/2	4'-11 3/4	5'- 2 3/4	5'- 6 1/2	5'- 9 1/2	5'-11 3/4	6'- 2 3/4
N	5'- 6 5/8	5'- 9 5/8	6'- 0 5/8	6'- 3 5/8	6'- 6 5/8	6'- 9 5/8	7'- 2 3/4	7'- 5 3/4	7'- 8 3/4	7'-11 3/4

QUANTITIES

PIPE DIA	REINF lbs	CONCRETE C.Y.
90"	2220	40.0
96"	2405	43.5
102"	2920	46.7
108"	3050	50.3
114"	3430	54.2
120"	3645	58.3
126"	3925	66.0
132"	4425	70.3
138"	4990	74.7
144"	5350	79.7

NOTE:
Quantities and steel list shown are for one headwall.

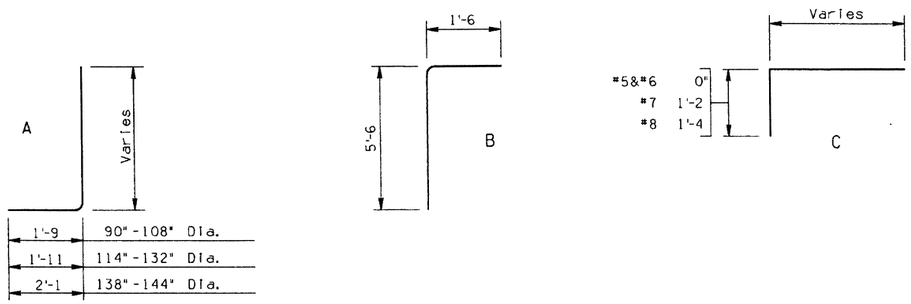

BENDS

DESIGN	K. W.	2-92	NO	DESCRIPTION OF REVISIONS	MADE BY	DATE
DRAWN	J. M.	4-92	1			
CHECKED	G. K.	4-92	2			
			3			
			4			

DESIGN APPROVED

APPROVED FOR DISTRIBUTION

ARIZONA
DEPARTMENT OF TRANSPORTATION
HIGHWAYS DIVISION
STANDARD DRAWINGS

OUTLET HEADWALLS
RIGHT ANGLE PIPE CULVERT
4:1 SLOPE

REVISION

STANDARD NO.
B-12.70

ZF1:(051020)SB1270.DGN:1 VIEW NAME:
07-MAY-1992 14:41

STEEL LIST

Mark	Bend	90" Dia.			96" Dia.			102" Dia.			108" Dia.			114" Dia.			120" Dia.			126" Dia.			132" Dia.			138" Dia.			144" Dia.		
		No	Size	Lgth	No	Size	Lgth	No	Size	Lgth	No	Size	Lgth	No	Size	Lgth	No	Size	Lgth	No	Size	Lgth	No	Size	Lgth	No	Size	Lgth	No	Size	Lgth
a1	A	8	#5	8'-0	8	#5	8'-3	10	#5	8'-6	10	#5	8'-9	10	#5	9'-3	10	#5	9'-6	12	#5	9'-9	12	#5	10'-0	12	#5	10'-6	12	#5	10'-9
a2	A	8	#5	8'-9	8	#5	9'-0	10	#5	9'-3	10	#5	9'-6	10	#5	10'-0	10	#5	10'-3	10	#5	10'-6	12	#5	11'-0	12	#5	11'-3	12	#5	11'-6
a3	A	8	#5	9'-6	8	#5	9'-9	8	#5	10'-0	10	#5	10'-3	10	#5	10'-9	10	#6	11'-0	10	#6	11'-6	10	#6	12'-0	12	#6	12'-3	12	#6	12'-6
a4	A	8	#5	10'-0	8	#5	10'-3	8	#5	10'-9	8	#6	11'-3	10	#6	11'-6	10	#6	12'-0	10	#6	12'-3	10	#6	12'-9	12	#6	13'-0	12	#7	13'-6
a5	A	8	#5	10'-9	8	#5	11'-0	8	#6	11'-6	8	#6	12'-0	10	#6	12'-6	10	#7	12'-9	10	#6	13'-0	10	#6	13'-9	10	#6	14'-0	12	#6	14'-6
a6	A	8	#5	11'-6	8	#6	11'-9	8	#6	12'-3	8	#7	12'-9	8	#7	13'-3	10	#7	13'-6	10	#7	14'-0	10	#7	14'-6	10	#7	15'-0	10	#7	15'-6
a7	A	6	#6	12'-3	8	#6	12'-6	8	#7	13'-0	8	#7	13'-6	8	#7	14'-0	8	#7	14'-6	10	#7	14'-9	10	#7	15'-6	10	#7	16'-0	10	#7	16'-6
b1	str	4	#4	26'-3	4	#4	27'-9	4	#4	29'-3	4	#4	30'-9	4	#4	32'-3	4	#4	34'-0	4	#4	35'-6	4	#4	37'-0	4	#4	38'-6	4	#4	40'-0
b2	str	12	#4	26'-0	12	#4	27'-6	16	#4	29'-0	16	#4	30'-6	16	#4	32'-0	16	#4	33'-6	16	#4	35'-0	16	#4	36'-6	20	#4	38'-0	20	#4	39'-6
b3	str	4	#4	24'-0	4	#4	27'-0	4	#4	21'-0	4	#4	24'-0	4	#4	26'-0	4	#4	30'-0	4	#4	33'-0	4	#4	36'-0	4	#4	29'-6	4	#4	33'-0
b4	str	4	#4	14'-6	4	#4	17'-9	4	#4	12'-0	4	#4	14'-9	4	#4	16'-6	4	#4	20'-9	4	#4	23'-3	4	#4	26'-6	4	#4	20'-9	4	#4	23'-6
b5	str	4	#4	5'-0	4	#4	8'-6	4	#4	3'-0	4	#4	5'-6	4	#4	6'-9	4	#4	11'-6	4	#4	13'-6	4	#4	17'-3	4	#4	12'-3	4	#4	14'-3
b6	str																4	#4	2'-6	4	#4	4'-0	4	#4	8'-0	4	#4	3'-6	4	#4	5'-0
b7	str																														
b8	str																														
c	str	4	#4	10'-6	4	#4	11'-0	4	#4	11'-6	4	#4	12'-0	4	#4	12'-6	4	#4	13'-0	4	#4	13'-6	4	#4	14'-0	4	#4	14'-6	4	#4	15'-0
d	A	6	#6	12'-3	6	#6	12'-9	6	#7	13'-3	6	#7	13'-9	6	#7	14'-6	6	#7	15'-0	6	#7	15'-6	6	#7	16'-0	6	#8	16'-6	6	#8	17'-0
e1	C	10	#5	3'-3	10	#5	3'-3	10	#5	3'-6	10	#5	3'-6	12	#5	3'-9	12	#5	3'-9	12	#5	4'-0	12	#5	4'-3	14	#5	4'-3	14	#5	4'-6
e2	C	10	#5	3'-6	10	#5	3'-9	10	#5	4'-0	10	#5	4'-0	12	#5	4'-3	12	#5	4'-3	12	#5	4'-6	12	#5	4'-9	14	#5	5'-0	14	#6	5'-3
e3	C	8	#5	4'-0	10	#5	4'-3	10	#5	4'-6	10	#5	4'-6	10	#5	4'-9	12	#5	5'-0	12	#5	5'-3	12	#6	5'-6	12	#6	5'-6	14	#6	5'-9
e4	C	8	#5	4'-6	8	#5	4'-9	10	#5	5'-0	10	#5	5'-0	10	#5	5'-3	10	#6	5'-6	12	#6	5'-9	12	#6	6'-0	12	#6	6'-3	12	#7	7'-9
e5	C	8	#5	5'-0	8	#5	5'-3	10	#5	5'-6	10	#5	5'-9	10	#6	6'-0	10	#6	6'-3	12	#6	6'-6	12	#7	7'-9	12	#7	8'-0	12	#7	8'-6
e6	C	8	#5	5'-6	8	#5	5'-9	8	#6	6'-0	10	#6	6'-3	10	#6	6'-6	10	#7	8'-0	10	#7	8'-3	12	#7	8'-6	12	#7	8'-9	12	#8	9'-3
e7	C	6	#5	5'-6	6	#5	5'-9	6	#6	6'-0	6	#6	6'-3	6	#6	6'-6	6	#7	8'-0	8	#7	8'-3	8	#7	8'-6	8	#7	8'-9	8	#8	9'-3
e8	C	9	#5	5'-6	9	#5	5'-9	10	#6	6'-0	10	#6	6'-3	11	#6	6'-6	11	#7	8'-0	12	#7	8'-3	12	#7	8'-6	13	#7	8'-9	13	#8	9'-3
f1	str	8	#4	6'-3	8	#4	6'-6	8	#4	6'-9	10	#4	7'-0	10	#4	7'-3	10	#4	7'-6	10	#4	7'-9	10	#4	8'-0	12	#4	8'-3	12	#4	8'-6
f2	str	8	#4	7'-3	8	#4	7'-6	8	#4	7'-9	8	#4	8'-0	10	#4	8'-3	10	#4	8'-9	10	#4	9'-0	10	#4	9'-3	10	#4	9'-6	12	#4	9'-9
f3	str	8	#4	8'-0	8	#4	8'-6	8	#4	8'-9	8	#4	9'-0	8	#4	9'-6	10	#4	9'-9	10	#4	10'-3	10	#4	10'-6	10	#4	10'-9	10	#4	11'-3
f4	str	6	#4	9'-0	8	#4	9'-6	8	#4	9'-9	8	#4	10'-3	8	#4	10'-6	8	#4	11'-0	10	#4	11'-6	10	#4	11'-9	10	#4	12'-3	10	#4	12'-6
f5	str	6	#4	10'-0	6	#4	10'-6	8	#4	10'-9	8	#4	11'-3	8	#4	11'-9	8	#4	12'-3	8	#4	12'-9	10	#4	13'-0	10	#4	13'-6	10	#4	14'-0
g	str	12	#4	26'-3	12	#4	27'-9	12	#4	29'-3	12	#4	30'-9	12	#4	32'-3	12	#4	33'-9	12	#4	35'-3	12	#4	36'-9	12	#4	38'-3	12	#4	39'-9
j	str	6	#4	8'-3	6	#4	8'-9	6	#4	9'-3	6	#4	9'-6	6	#4	10'-0	6	#4	10'-6	6	#4	11'-0	6	#4	11'-6	6	#4	12'-0	6	#4	12'-6
m1	str	8	#4	30'-0	8	#4	31'-9	8	#4	33'-3	8	#4	35'-0	10	#4	36'-6	10	#4	38'-3	10	#4	40'-0	10	#4	41'-9	12	#4	43'-3	12	#4	45'-0
m2	str	2	#4	30'-0	2	#4	31'-9	2	#4	33'-3	2	#4	35'-0	2	#4	36'-6	2	#4	38'-3	2	#4	40'-0	2	#4	41'-9	2	#4	43'-3	2	#4	45'-0
n1	str	4	#4	16'-6	4	#4	17'-3	4	#4	18'-3	4	#4	19'-0	5	#4	19'-9	5	#4	20'-6	5	#4	21'-6	5	#4	22'-6	6	#4	23'-3	6	#4	24'-0
n2	str	1	#4	16'-6	1	#4	17'-3	1	#4	18'-3	1	#4	19'-0	1	#4	19'-9	1	#4	20'-6	1	#4	21'-6	1	#4	22'-6	1	#4	23'-3	1	#4	24'-0
p	str	4	#5	10'-9	4	#5	11'-3	4	#5	11'-9	4	#5	12'-3	4	#5	12'-9	4	#5	13'-3	4	#5	14'-3	4	#5	14'-9	4	#5	15'-3	4	#5	15'-9
q	str	2	#6	12'-9	2	#6	13'-3	2	#6	13'-9	2	#6	14'-3	2	#6	14'-9	2	#6	15'-3	2	#6	16'-3	2	#6	16'-9	2	#6	17'-3	2	#6	17'-9
u	B	82	#4	7'-0	88	#4	7'-0	94	#4	7'-0	98	#4	7'-0	102	#4	7'-0	108	#4	7'-0	112	#4	7'-0	116	#4	7'-0	122	#4	7'-0	126	#4	7'-0

Pipe Diameter

	90"	96"	102"	108"	114"	120"	126"	132"	138"	144"
A	0'- 3	0'- 6	0'- 3	0'- 6	0'- 3	0'- 6	0'- 3	0'- 6	0'- 3	0'- 6
B	2'- 2	2'- 2	2'- 3	2'- 3	2'- 4	2'- 4	2'- 5	2'- 5	2'- 6	2'- 6
C	1'- 4	1'- 6	1'- 6	1'- 7	1'- 8	1'-10	1'-11	2'- 1	2'- 2	2'- 3
D	2'- 6	2'- 7	2'- 9	2'-11	3'- 0	3'- 1	3'- 2	3'- 3	3'- 4	3'- 6
E	6'- 0	6'- 3	6'- 6	6'- 9	7'- 0	7'- 3	7'- 6	7'- 9	8'- 0	8'- 3
F	26'- 0	27'- 6	29'- 0	30'- 6	32'- 0	33'- 6	35'- 0	36'- 6	38'- 0	39'- 6
G	4'-11	5'- 2	5'- 5	5'- 8	5'-11	6'- 2	6'- 5	6'- 8	6'-11	7'- 2
H	9'- 6	10'- 0	10'- 6	11'- 0	11'- 6	12'- 0	12'- 6	13'- 0	13'- 6	14'- 0
J	5'- 3	5'- 6	5'- 9	6'- 0	6'- 3	6'- 6	6'- 9	7'- 0	7'- 3	7'- 6
K	30'- 4⅝	32'- 0¾	33'- 8⅛	35'- 4¼	36'-11⅝	38'- 7¾	40'- 4½	42'- 0⅝	43'- 8	45'- 4⅛
L	8'- 3⅝	8'- 8¾	9'- 1⅛	9'- 6¼	9'-10⅝	10'- 3¾	10'- 9½	11'- 2⅝	11'- 7	12'- 0⅛
M	4'- 1¼	4'- 4¼	4'- 6½	4'- 9½	4'-11¾	5'- 2¾	5'- 6½	5'- 9½	5'-11¾	6'- 2¾
N	5'- 6⅝	5'- 9⅝	6'- 0⅝	6'- 3⅝	6'- 6⅝	6'- 9⅝	7'- 2¾	7'- 5¾	7'- 8¾	7'-11¾

QUANTITIES

PIPE Dia.	REINF Lbs.	CONCRETE C.Y.
90"	2605	46.7
96"	2850	50.9
102"	3300	55.0
108"	3600	59.5
114"	3965	64.2
120"	4550	69.2
126"	4850	78.8
132"	5245	84.5
138"	5720	90.2
144"	6420	96.1

NOTE:
Quantities and steel list shown are for one headwall.

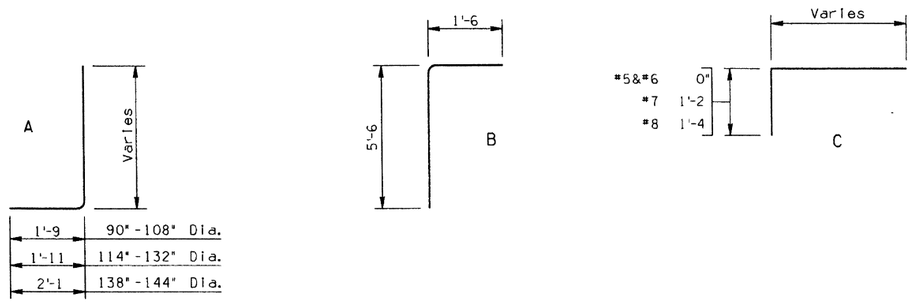

BENDS

DESIGN	K. W.	4-92	NO	DESCRIPTION OF REVISIONS	MADE BY	DATE
DRAWN	J. M.	4-92	1			
CHECKED	G. K.	4-92	2			
			3			
			4			

DESIGN APPROVED
F. Daniel Davis

APPROVED FOR DISTRIBUTION
Angus P. Rhodes

Registered Professional Engineer (Civil) CERTIFICATE NO. 9910 F. DANIEL DAVIS Date Signed 5-14-92 Arizona U.S.A.

ARIZONA
DEPARTMENT OF TRANSPORTATION
HIGHWAYS DIVISION
STANDARD DRAWINGS

OUTLET HEADWALLS
RIGHT ANGLE PIPE CULVERT
6:1 SLOPE

REVISION

STANDARD NO.
B-12.80

ZF1:(051020)SB1280.DGN:1 VIEW NAME:
07-MAY-1992 14:43

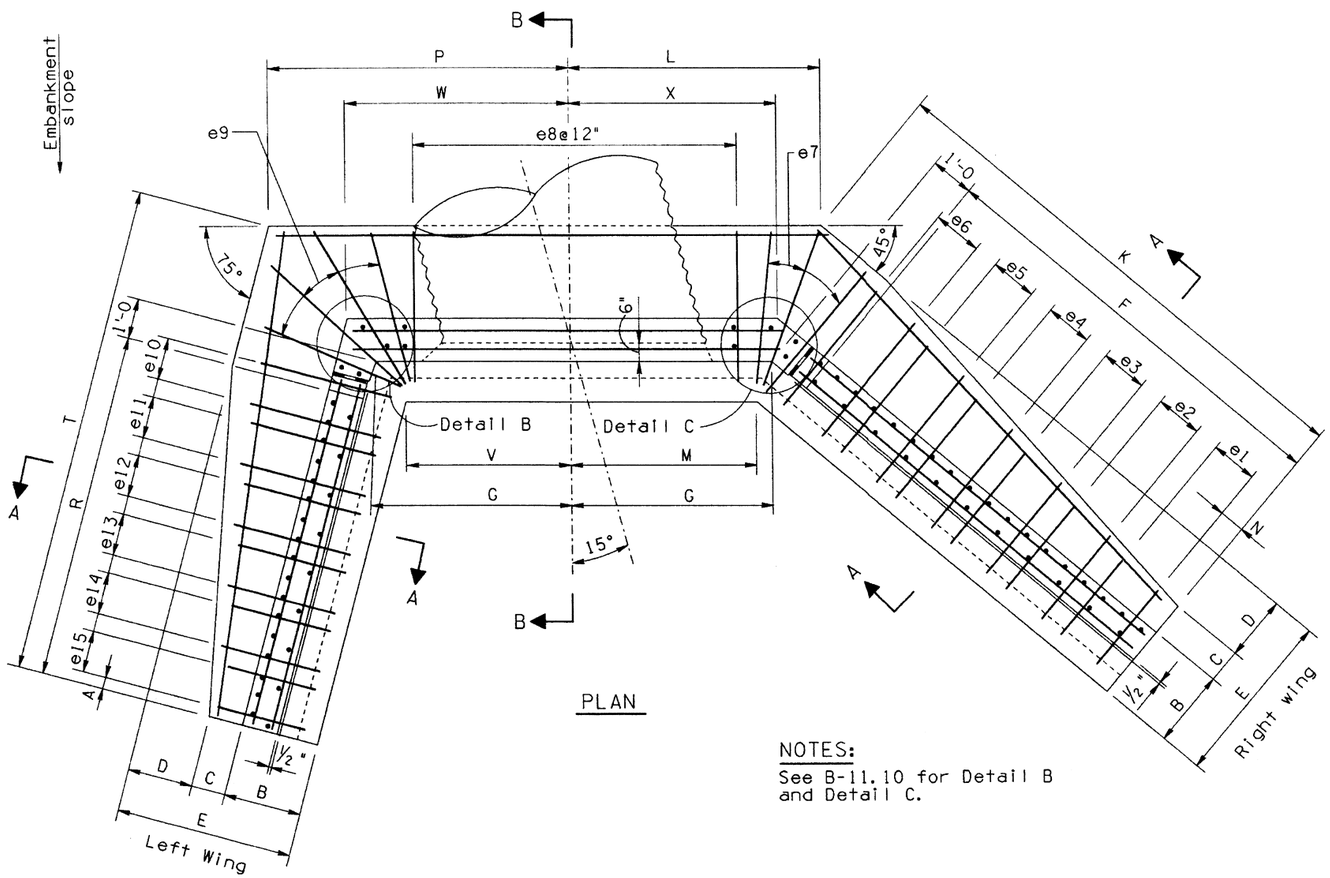

PLAN

NOTES:

See B-11.10 for Detail B and Detail C.

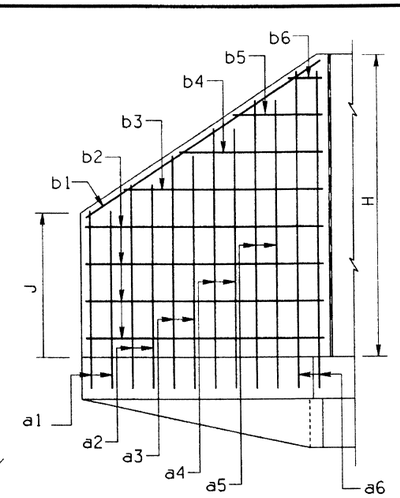

Back Face

RIGHT WING ELEVATION

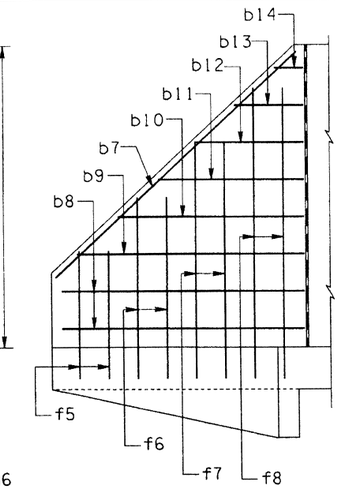

Front Face

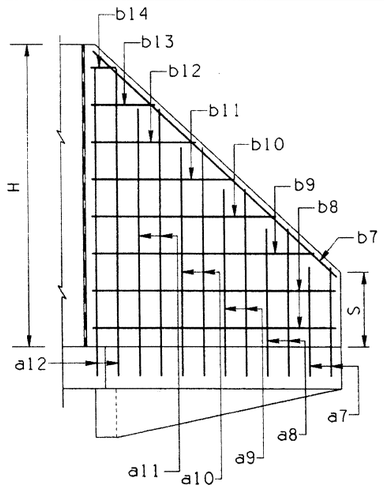

Back Face

LEFT WING ELEVATION

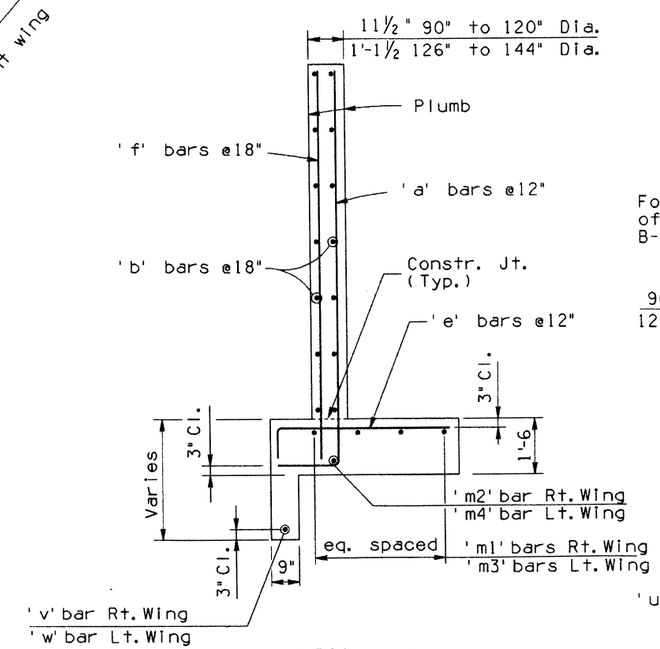

SECTION A-A

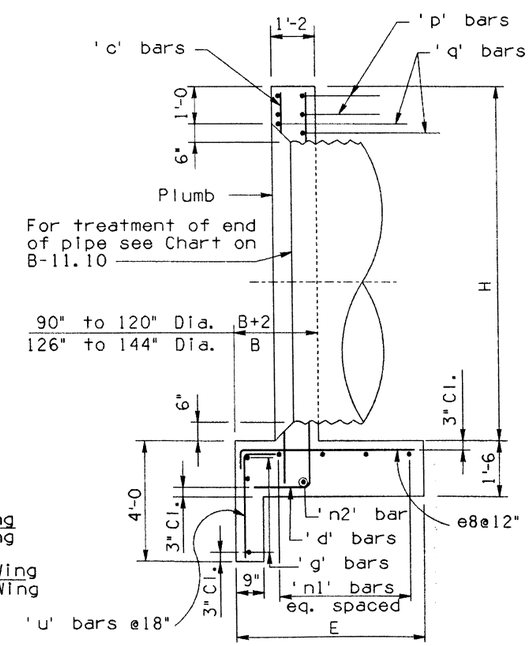

SECTION B-B

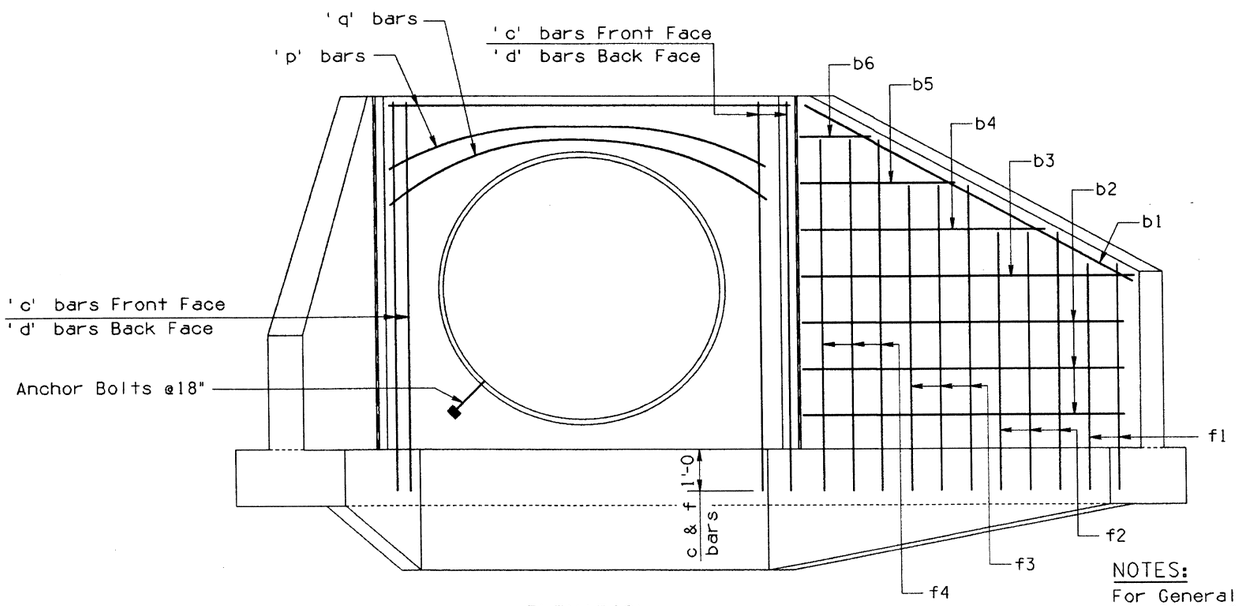

ELEVATION

NOTES:

For General Notes and Misc. Details see B-11.10. For steel list and bend diagrams see B-13.20, B-13.30 or B-13.40

DESIGN	K. W.	4-92	NO	DESCRIPTION OF REVISIONS	MADE BY	DATE
DRAWN	J. M. & C. H.	4-92	1			
CHECKED	G. K.	4-92	2			
			3			
			4			

DESIGN APPROVED	ARIZONA DEPARTMENT OF TRANSPORTATION HIGHWAYS DIVISION STANDARD DRAWINGS	REVISION 4-92
APPROVED FOR DISTRIBUTION	INLET HEADWALLS 15° SKEW PIPE CULVERT	STANDARD NO. B-13.10

ZFL(051020150131D.DGN)1 VIEW NAME: BR
08-MAY-1992 07:34

STEEL LIST

Mark	Bend	90" Dia.			96" Dia.			102" Dia.			108" Dia.			114" Dia.			120" Dia.			126" Dia.			132" Dia.			138" Dia.			144" Dia.		
		No	Size	Lgth	No	Size	Lgth	No	Size	Lgth	No	Size	Lgth	No	Size	Lgth	No	Size	Lgth	No	Size	Lgth	No	Size	Lgth	No	Size	Lgth	No	Size	Lgth
a1	A	3	#5	6'-3	3	#5	6'-6	3	#5	7'-0	3	#5	7'-3	3	#5	7'-9	3	#5	8'-3	3	#5	8'-6	4	#5	8'-9	4	#5	9'-3	4	#5	9'-6
a2	A	3	#5	7'-6	3	#5	7'-9	3	#5	8'-3	3	#5	8'-6	3	#5	9'-0	3	#5	9'-6	3	#5	9'-9	3	#5	10'-0	3	#5	10'-9	4	#5	11'-0
a3	A	3	#5	8'-9	3	#5	9'-0	3	#5	9'-6	3	#5	9'-6	3	#5	10'-3	3	#5	10'-6	3	#5	11'-0	3	#5	11'-3	3	#6	12'-0	3	#6	12'-9
a4	A	3	#5	10'-3	3	#5	10'-0	3	#5	10'-6	3	#6	10'-9	3	#6	11'-6	3	#6	11'-9	3	#6	12'-3	3	#6	12'-6	3	#7	13'-0	3	#7	14'-0
a5	A	3	#6	11'-6	2	#6	11'-3	2	#6	11'-9	3	#6	12'-0	3	#7	12'-9	3	#7	13'-0	3	#7	13'-6	3	#7	14'-0	3	#7	14'-6	3	#8	15'-0
a6	A				2	#6	12'-6	2	#7	13'-0	2	#7	13'-3	2	#7	14'-0	3	#7	14'-3	3	#7	14'-9	3	#7	15'-3	3	#8	15'-9	3	#8	16'-3
a7	A	3	#5	5'-6	3	#5	5'-9	3	#5	6'-0	3	#5	6'-3	3	#5	6'-9	3	#5	7'-0	3	#5	7'-3	3	#5	7'-6	3	#5	8'-0	3	#5	8'-3
a8	A	3	#5	7'-0	3	#5	7'-3	3	#5	7'-6	3	#5	8'-0	3	#5	8'-3	3	#5	8'-6	3	#5	8'-9	3	#5	9'-0	3	#5	9'-6	3	#5	10'-0
a9	A	3	#5	8'-9	3	#5	9'-0	3	#5	9'-3	3	#5	9'-6	3	#5	10'-0	3	#5	10'-3	3	#5	10'-3	3	#5	10'-9	3	#5	11'-3	3	#5	11'-6
a10	A	2	#5	10'-6	2	#5	10'-9	3	#6	11'-0	3	#6	11'-3	3	#6	11'-9	3	#6	12'-0	3	#6	12'-3	3	#6	12'-3	3	#6	12'-9	3	#6	13'-3
a11	A	2	#6	11'-9	2	#6	12'-3	2	#7	12'-9	2	#7	13'-0	3	#7	13'-6	3	#7	13'-9	2	#7	13'-9	2	#7	14'-0	3	#7	14'-6	3	#7	14'-9
a12	A																			2	#7	14'-9	2	#7	15'-3	2	#8	16'-0	2	#8	16'-6
b1	str	2	#4	15'-6	2	#4	16'-0	2	#4	16'-6	2	#4	17'-0	2	#4	17'-6	2	#4	18'-0	2	#4	18'-6	2	#4	19'-3	2	#4	19'-9	2	#4	20'-3
b2	str	4	#4	14'-6	4	#4	15'-0	6	#4	15'-6	6	#4	16'-0	6	#4	16'-6	6	#4	17'-0	8	#4	17'-6	8	#4	18'-0	8	#4	18'-6	8	#4	19'-0
b3	str	2	#4	13'-0	2	#4	14'-6	2	#4	12'-0	2	#4	13'-9	2	#4	15'-0	2	#4	16'-3	2	#4	13'-9	2	#4	14'-9	2	#4	16'-0	2	#4	17'-6
b4	str	2	#4	9'-3	2	#4	10'-9	2	#4	8'-3	2	#4	10'-0	2	#4	11'-3	2	#4	12'-3	2	#4	10'-0	2	#4	11'-0	2	#4	12'-3	2	#4	13'-6
b5	str	2	#4	5'-6	2	#4	7'-0	2	#4	4'-9	2	#4	6'-3	2	#4	7'-3	2	#4	8'-3	2	#4	6'-0	2	#4	7'-3	2	#4	8'-3	2	#4	9'-9
b6	str	2	#4	2'-0	2	#4	3'-3	2	#4	1'-3	2	#4	2'-6	2	#4	3'-6	2	#4	4'-6	2	#4	2'-3	2	#4	3'-6	2	#4	4'-6	2	#4	6'-0
b7	str	2	#4	13'-6	2	#4	14'-3	2	#4	14'-9	2	#4	15'-3	2	#4	15'-9	2	#4	16'-6	2	#4	17'-0	2	#4	17'-6	2	#4	18'-0	2	#4	18'-6
b8	str	4	#4	12'-0	4	#4	12'-6	4	#4	13'-0	4	#4	13'-6	4	#4	14'-0	6	#4	14'-6	6	#4	15'-0	6	#4	15'-6	6	#4	16'-0	6	#4	16'-6
b9	str	2	#4	9'-6	2	#4	10'-6	2	#4	11'-6	2	#4	12'-3	2	#4	13'-6	2	#4	12'-0	2	#4	12'-6	2	#4	13'-9	2	#4	14'-6	2	#4	15'-6
b10	str	2	#4	6'-9	2	#4	8'-0	2	#4	8'-9	2	#4	9'-6	2	#4	10'-9	2	#4	9'-3	2	#4	9'-9	2	#4	10'-9	2	#4	11'-9	2	#4	12'-6
b11	str	2	#4	4'-3	2	#4	5'-3	2	#4	6'-3	2	#4	6'-9	2	#4	8'-0	2	#4	6'-6	2	#4	7'-0	2	#4	8'-0	2	#4	9'-0	2	#4	10'-0
b12	str	2	#4	1'-6	2	#4	2'-9	2	#4	3'-6	2	#4	4'-3	2	#4	5'-3	2	#4	4'-0	2	#4	4'-3	2	#4	5'-3	2	#4	6'-6	2	#4	7'-0
b13	str							2	#4	1'-0	2	#4	1'-6	2	#4	2'-6	2	#4	1'-3	2	#4	1'-6	2	#4	2'-3	2	#4	3'-9	2	#4	4'-3
b14	str																									2	#4	1'-0	2	#4	1'-6
c	str	5	#4	10'-6	5	#4	11'-0	5	#4	11'-6	5	#4	12'-0	5	#4	12'-6	5	#4	13'-0	5	#4	13'-6	5	#4	14'-0	5	#4	14'-6	5	#4	15'-0
d	A	6	#6	12'-3	6	#6	12'-9	6	#7	13'-3	6	#7	13'-9	6	#7	14'-6	6	#7	15'-0	6	#7	15'-6	6	#7	16'-0	6	#8	16'-6	6	#8	17'-0
e1	C	3	#5	3'-6	3	#5	3'-6	3	#5	3'-9	3	#5	4'-0	3	#5	4'-0	3	#5	4'-3	3	#5	4'-3	4	#5	4'-6	4	#5	4'-9	4	#5	4'-9
e2	C	3	#5	4'-3	3	#5	4'-3	3	#5	4'-3	3	#5	4'-6	3	#5	4'-9	3	#5	5'-0	3	#5	5'-0	3	#5	5'-3	4	#5	5'-6	4	#6	5'-6
e3	C	3	#5	4'-9	3	#5	4'-9	3	#5	5'-0	3	#5	5'-3	3	#5	5'-6	3	#6	5'-9	3	#6	5'-9	3	#6	6'-3	3	#6	6'-6	3	#6	6'-6
e4	C	3	#5	5'-6	3	#5	5'-6	3	#5	5'-6	3	#6	6'-0	3	#6	6'-3	3	#6	6'-6	3	#6	6'-9	3	#7	7'-9	3	#7	8'-0	3	#7	8'-6
e5	C	3	#5	6'-3	2	#6	6'-0	2	#6	6'-3	3	#6	6'-6	3	#6	7'-0	3	#7	8'-0	3	#7	8'-0	3	#7	8'-9	3	#7	9'-0	3	#7	9'-6
e6	C				2	#6	6'-9	2	#6	7'-0	2	#7	8'-3	2	#7	8'-6	3	#8	8'-9	3	#8	9'-3	3	#8	9'-9	3	#8	10'-0	3	#8	10'-6
e7	C	3	#6	6'-6	3	#6	7'-0	3	#7	7'-3	3	#7	8'-6	3	#7	8'-9	4	#8	9'-0	4	#8	9'-6	4	#8	10'-0	4	#8	10'-3	4	#9	10'-9
e8	C	9	#6	6'-6	9	#6	7'-0	10	#7	8'-6	10	#7	8'-6	11	#7	8'-9	11	#8	9'-0	12	#8	9'-6	12	#8	10'-0	13	#8	10'-3	13	#9	10'-9
e9	C	5	#6	6'-6	5	#6	7'-0	5	#7	8'-6	5	#7	8'-6	5	#7	8'-9	6	#8	9'-0	6	#8	9'-6	6	#8	10'-0	6	#8	10'-3	6	#9	10'-9
e10	C	3	#5	6'-3	2	#5	6'-9	2	#6	7'-0	2	#6	7'-3	2	#7	8'-6	3	#8	8'-9	3	#8	9'-3	2	#7	9'-9	2	#8	10'-0	2	#8	10'-3
e11	C	3	#5	5'-3	2	#5	6'-0	2	#5	6'-3	3	#5	6'-6	3	#6	6'-9	3	#7	7'-9	3	#7	8'-0	2	#6	8'-0	2	#7	9'-0	3	#7	9'-0
e12	C	3	#5	4'-6	3	#5	5'-0	3	#5	5'-3	3	#5	5'-6	3	#5	5'-9	3	#6	6'-0	3	#6	6'-3	3	#6	7'-0	3	#6	7'-3	3	#6	7'-6
e13	C	3	#5	3'-6	3	#5	4'-3	3	#5	4'-6	3	#5	4'-9	3	#5	5'-0	3	#5	5'-3	3	#5	5'-3	3	#5	6'-3	3	#6	6'-6	3	#6	6'-6
e14	C				3	#5	3'-6	3	#5	3'-9	3	#5	4'-0	3	#5	4'-0	3	#5	4'-3	3	#5	4'-3	3	#5	5'-3	3	#5	5'-6	3	#5	5'-6
e15	C																						3	#5	4'-6	3	#5	4'-9	3	#5	4'-9
f1	str	3	#4	4'-6	3	#4	4'-9	3	#4	5'-3	3	#4	5'-6	3	#4	5'-9	3	#4	6'-3	3	#4	6'-6	3	#4	6'-9	4	#4	7'-3	4	#4	7'-6
f2	str	3	#4	6'-3	3	#4	6'-9	3	#4	7'-0	3	#4	7'-6	3	#4	7'-9	3	#4	8'-0	3	#4	8'-6	3	#4	8'-9	3	#4	9'-3	3	#4	9'-9
f3	str	2	#4	8'-0	2	#4	8'-9	3	#4	9'-0	3	#4	9'-3	3	#4	9'-9	3	#4	10'-0	3	#4	10'-3	3	#4	10'-6	3	#4	11'-0	3	#4	11'-6
f4	str	2	#4	9'-9	2	#4	10'-3	2	#4	10'-9	2	#4	11'-3	2	#4	11'-9	3	#4	11'-9	3	#4	12'-3	3	#4	12'-6	3	#4	13'-0	3	#4	13'-6
f5	str	3	#4	3'-9	3	#4	4'-0	3	#4	4'-3	3	#4	4'-6	3	#4	4'-9	3	#4	5'-0	3	#4	5'-6	3	#4	5'-6	3	#4	5'-9	3	#4	6'-6
f6	str	3	#4	6'-6	3	#4	6'-6	3	#4	6'-9	3	#4	7'-3	3	#4	7'-0	3	#4	7'-9	3	#4	8'-0	3	#4	8'-0	3	#4	8'-3	3	#4	8'-9
f7	str	2	#4	9'-3	3	#4	9'-3	3	#4	9'-6	3	#4	10'-0	2	#4	9'-9	2	#4	10'-3	2	#4	10'-6	3	#4	10'-6	3	#4	11'-0	3	#4	11'-3
f8	str													2	#4	11'-6	2	#4	11'-9	2	#4	12'-3	2	#4	13'-0	2	#4	13'-6	2	#4	13'-9
g	str	2	#4	9'-3	2	#4	9'-9	2	#4	10'-3	2	#4	10'-9	2	#4	11'-3	2	#4	11'-9	2	#4	12'-3	2	#4	12'-9	2	#4	13'-3	2	#4	13'-9
m1	str	4	#4	17'-9	4	#4	18'-3	5	#4	19'-0	5	#4	19'-6	5	#4	20'-3	5	#4	20'-9	6	#4	21'-6	6	#4	22'-0	6	#4	22'-6	6	#4	23'-3
m2	str	1	#4	17'-9	1	#4	18'-3	1	#4	19'-0	1	#4	19'-6	1	#4	20'-3	1	#4	20'-9	1	#4	21'-6	1	#4	22'-0	1	#4	22'-6	1	#4	23'-3
m3	str	4	#4	17'-3	4	#4	18'-0	5	#4	18'-9	5	#4	19'-6	5	#4	20'-3	5	#4	21'-0	6	#4	21'-9	6	#4	22'-6	6	#4	23'-0	6	#4	23'-9
m4	str	1	#4	17'-3	1	#4	18'-0	1	#4	18'-9	1	#4	19'-6	1	#4	20'-3	1	#4	21'-0	1	#4	21'-9	1	#4	22'-6	1	#4	23'-0	1	#4	23'-9
n1	str	4	#4	17'-0	4	#4	17'-9	5	#4	18'-6	5	#4	19'-6	5	#4	20'-6	5	#4	21'-3	6	#4	22'-3	6	#4	23'-0	6	#4	24'-0	6	#4	25'-0
n2	str	1	#4	17'-0	1	#4	17'-9	1	#4	18'-6	1	#4	19'-6	1	#4	20'-6	1	#4	21'-3	1	#4	22'-3	1	#4	23'-0	1	#4	24'-0	1	#4	25'-0
p	str	4	#5	10'-9	4	#5	11'-3	4	#5	11'-9	4	#5	12'-3	4	#5	12'-9	4	#5	13'-3	4	#5	14'-3	4	#5	14'-9	4	#5	15'-3	4	#5	15'-9
q	str	2	#6	12'-9	2	#6	13'-3	2	#6	13'-9	2	#6	14'-3	2	#6	14'-9	2	#6	15'-3	2	#6	16'-3	2	#6	16'-9	2	#6	17'-3	2	#6	17'-9
u	B	7	#4	5'-0	7	#4	5'-0	8	#4	5'-0	8	#4	5'-0	8	#4	5'-0	9	#4	5'-0	9	#4	5'-0	9	#4	5'-0	10	#4	5'-0	10	#4	5'-0
v	str	1	#4	15'-0	1	#4	15'-6	1	#4	16'-0	1	#4	16'-6	1	#4	17'-0	1	#4	17'-6	1	#4	18'-0	1	#4	18'-6	1	#4	19'-0	1	#4	19'-6
w	str	1	#4	12'-3	1	#4	12'-9	1	#4	13'-3	1	#4	13'-9	1	#4	14'-3	1	#4	14'-9	1	#4	15'-3	1	#4	15'-9	1	#4	16'-3	1	#4	16'-9

Pipe Diameter

	90"	96"	102"	108"	114"	120"	126"	132"	138"	144"
A	0'- 3	0'- 6	0'- 3	0'- 6	0'- 3	0'- 6	0'- 3	0'- 6	0'- 3	0'- 6
B	2'- 2	2'- 2	2'- 3	2'- 3	2'- 4	2'- 4	2'- 5	2'- 5	2'- 6	2'- 6
C	1'- 6	1'- 8	1'- 9	1'-11	2'- 0	2'- 2	2'- 3	2'- 5	2'- 6	2'- 8
D	3'- 4	3'- 6	3'- 8	3'-10	4'- 0	4'- 2	4'- 4	4'- 6	4'- 8	4'-10
E	7'- 0	7'- 4	7'- 8	8'- 0	8'- 4	8'- 8	9'- 0	9'- 4	9'- 8	10'- 0
F	14'- 6	15'- 0	15'- 6	16'- 0	16'- 6	17'- 0	17'- 6	18'- 0	18'- 6	19'- 0
G	5'- 0 5/8	5'- 3 3/4	5'- 6 3/4	5'- 9 7/8	6'- 1	6'- 4 1/8	6'- 7 1/4	6'-10 3/8	7'- 1 3/8	7'- 4 1/2
H	9'- 6	10'- 0	10'- 6	11'- 0	11'- 6	12'- 0	12'- 6	13'- 0	13'- 6	14'- 0
J	3'- 6	3'- 10	4'- 2	4'- 6	4'- 10	5'- 2	5'- 6	5'- 10	6'- 2	6'- 6
K	17'-11	18'- 6 5/8	19'- 1 7/8	19'- 9 1/2	20'- 4 3/4	21'- 0 1/2	21'- 8 1/2	22'- 4 1/8	22'-11 3/8	23'- 7 1/8
L	7'- 5 5/8	7'-10 3/8	8'- 2 3/4	8'- 7 1/2	8'-11 3/4	9'- 4 5/8	9'- 9 3/4	10'- 2 1/2	10'- 6 7/8	10'-11 5/8
M	4'- 6 3/4	4'- 9 7/8	5'- 0 5/8	5'- 3 3/4	5'- 6 3/8	5'- 9 1/2	6'- 1	6'- 4 1/8	6'- 6 3/4	6'- 9 7/8
N	0'- 6	0'- 3	0'- 6	0'- 3	0'- 6	0'- 3	0'- 6	0'- 3	0'- 6	0'- 3
P	9'- 6 1/4	10'- 0 1/2	10'- 5 7/8	11'- 0	11'- 5 1/2	11'-11 5/8	12'- 6 5/8	13'- 0 3/4	13'- 6 1/8	14'- 0 3/8
R	12'- 0	12'- 6	13'- 0	13'- 6	14'- 0	14'- 6	15'- 0	15'- 6	16'- 0	16'- 6
S	2'- 9	3'- 0	3'- 3	3'- 6	3'- 9	4'- 0	4'- 3	4'- 6	4'- 9	5'- 0
T	17'- 5 3/4	18'- 2 3/4	18'-11 1/8	19'- 8 1/8	20'- 4 1/2	21'- 1 1/2	21'-11 3/8	22'- 8 3/8	23'- 4 3/4	24'- 1 3/4
V	4'- 1 7/8	4'- 5	4'- 7 1/4	4'-10 3/8	5'- 0 3/4	5'- 3 7/8	5'- 7 3/4	5'-10 7/8	6'- 1 1/8	6'- 4 1/4
W	5'- 9 1/4	6'- 0 3/8	6'- 3 1/2	6'- 6 5/8	6'- 9 5/8	7'- 0 3/4	7'- 6	7'- 9 1/8	8'- 0 1/8	8'- 3 1/4
X	5'- 3 1/2	5'- 6 5/8	5'- 9 3/4	6'- 0 7/8	6'- 4	6'- 7 1/8	7'- 1	7'- 4 1/8	7'- 7 1/4	7'-10 3/8

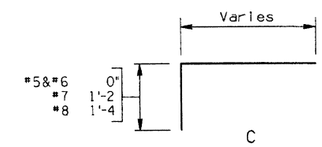

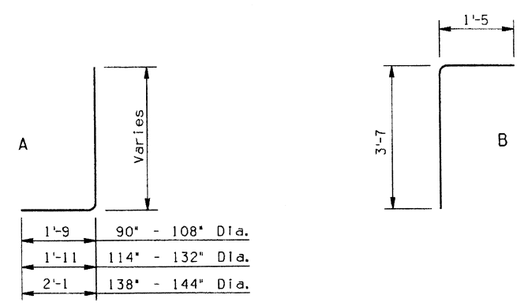

BENDS

QUANTITIES		
PIPE Dia.	REINF Lbs.	CONCRETE C.Y.
90"	1295	25.5
96"	1390	27.8
102"	1750	30.1
108"	1880	32.6
114"	2065	35.1
120"	2455	37.7
126"	2660	42.5
132"	2765	45.5
138"	3125	48.4
144"	3500	51.6

NOTE:
Quantities and steel list shown are for one headwall.

DESIGN	K. M.	2-92
DRAWN	J. M. & G. H.	4-92
CHECKED	G. K.	4-92

NO	DESCRIPTION OF REVISIONS	MADE BY	DATE
1			
2			
3			
4			

DESIGN APPROVED

APPROVED FOR DISTRIBUTION

ARIZONA
DEPARTMENT OF TRANSPORTATION
HIGHWAYS DIVISION
STANDARD DRAWINGS

INLET HEADWALLS
15° SKEW PIPE CULVERT
2:1 SLOPE

REVISION 4-92

STANDARD NO. B-13.20

ZF1:(051020)SB1320.DGN;5 VIEW NAME: BR
08-MAY-1992 07:36

STEEL LIST

Mark	Bend	90" Dia. No	90" Size	90" Lgth	96" Dia. No	96" Size	96" Lgth	102" Dia. No	102" Size	102" Lgth	108" Dia. No	108" Size	108" Lgth	114" Dia. No	114" Size	114" Lgth
a1	A	4	#5	8'-6	4	#5	8'-9	4	#5	9'-3	4	#5	9'-6	4	#5	10'-0
a2	A	4	#5	9'-3	4	#5	9'-6	4	#5	10'-0	4	#5	10'-3	4	#5	10'-9
a3	A	3	#5	10'-0	4	#5	10'-3	4	#5	10'-9	4	#5	11'-0	4	#6	11'-6
a4	A	3	#5	10'-6	3	#5	11'-0	4	#6	11'-6	4	#6	12'-0	4	#6	12'-6
a5	A	3	#5	11'-3	3	#6	11'-9	3	#6	12'-3	4	#7	12'-9	4	#7	13'-3
a6	A	3	#6	12'-0	3	#6	12'-6	3	#7	13'-0	3	#7	13'-6	4	#7	14'-0
a7	A	3	#5	7'-9	4	#5	8'-0	4	#5	8'-3	4	#5	8'-6	4	#5	9'-0
a8	A	3	#5	8'-6	3	#5	9'-0	4	#5	9'-3	4	#5	9'-6	4	#5	10'-0
a9	A	3	#5	9'-3	3	#5	9'-9	3	#5	10'-0	4	#5	10'-6	4	#5	11'-0
a10	A	3	#5	10'-3	3	#5	10'-9	3	#6	11'-0	3	#6	11'-6	4	#6	12'-0
a11	A	3	#5	11'-0	3	#6	11'-6	3	#6	12'-0	3	#7	12'-6	3	#7	13'-0
a12	A	3	#6	11'-9	3	#6	12'-6	3	#7	13'-0	3	#7	13'-6	3	#7	14'-0
b1	str	2	#4	19'-3	2	#4	20'-3	2	#4	21'-3	2	#4	22'-3	2	#4	23'-3
b2	str	8	#4	19'-0	8	#4	20'-0	8	#4	21'-0	8	#4	22'-0	10	#4	23'-0
b3	str	2	#4	12'-0	2	#4	14'-6	2	#4	17'-6	2	#4	20'-3	2	#4	15'-3
b4	str	2	#4	5'-0	2	#4	7'-0	2	#4	10'-3	2	#4	12'-3	2	#4	7'-9
b5	str							2	#4	3'-0	2	#4	4'-3			
b6	str															
b7	str	2	#4	17'-6	2	#4	18'-6	2	#4	19'-6	2	#4	20'-6	2	#4	21'-6
b8	str	6	#4	17'-0	6	#4	18'-0	6	#4	19'-0	8	#4	20'-0	8	#4	21'-0
b9	str	2	#4	14'-6	2	#4	17'-0	2	#4	18'-6	2	#4	15'-6	2	#4	17'-0
b10	str	2	#4	9'-0	2	#4	11'-3	2	#4	13'-0	2	#4	9'-9	2	#4	11'-6
b11	str	2	#4	3'-6	2	#4	5'-6	2	#4	7'-6	2	#4	4'-0	2	#4	6'-0
b12	str							2	#4	2'-0						
b13	str															
b14	str															
c	str	5	#4	10'-6	5	#4	11'-0	5	#4	11'-6	5	#4	12'-0	5	#4	12'-6
d	A	6	#6	12'-3	6	#6	12'-9	6	#7	13'-3	6	#7	13'-9	6	#7	14'-6
e1	C	4	#5	3'-9	4	#5	3'-9	4	#5	4'-0	4	#5	4'-3	4	#5	4'-3
e2	C	4	#5	4'-0	4	#5	4'-3	4	#5	4'-6	4	#5	4'-9	4	#5	4'-9
e3	C	3	#5	4'-6	4	#5	4'-9	4	#5	5'-0	4	#5	5'-3	4	#5	5'-3
e4	C	3	#5	5'-0	3	#5	5'-0	4	#5	5'-3	4	#5	5'-9	4	#6	6'-0
e5	C	3	#5	5'-3	3	#5	5'-6	3	#5	5'-9	4	#6	6'-3	4	#7	7'-3
e6	C	3	#5	5'-9	3	#6	6'-0	3	#6	6'-3	3	#6	6'-9	4	#7	7'-9
e7	C	3	#5	6'-0	3	#6	6'-3	3	#6	6'-6	3	#6	7'-0	3	#7	8'-0
e8	C	9	#5	6'-0	9	#6	6'-3	10	#6	6'-6	10	#6	7'-0	11	#7	8'-0
e9	C	5	#5	6'-0	5	#6	6'-3	5	#6	6'-6	5	#6	7'-0	5	#7	8'-0
e10	C	2	#5	5'-9	3	#6	6'-0	3	#6	6'-3	3	#6	6'-9	3	#7	7'-9
e11	C	3	#5	5'-3	3	#5	5'-6	3	#5	5'-9	3	#6	6'-3	3	#7	7'-3
e12	C	3	#5	5'-0	3	#5	5'-0	3	#5	5'-3	3	#5	5'-9	3	#6	6'-0
e13	C	3	#5	4'-6	3	#5	4'-9	3	#5	5'-0	3	#5	5'-3	4	#5	5'-3
e14	C	3	#5	4'-0	3	#5	4'-3	3	#5	4'-6	4	#5	4'-9	4	#5	4'-9
e15	C	3	#5	3'-9	3	#5	3'-9	4	#5	4'-0	4	#5	4'-3	4	#5	4'-3
f1	str	4	#4	6'-6	4	#4	7'-0	4	#4	7'-3	4	#4	7'-6	4	#4	8'-0
f2	str	3	#4	7'-6	4	#4	8'-0	4	#4	8'-6	4	#4	8'-9	4	#4	9'-3
f3	str	3	#4	8'-9	3	#4	9'-3	3	#4	9'-6	4	#4	10'-0	4	#4	10'-3
f4	str	3	#4	10'-0	3	#4	10'-3	3	#4	10'-9	3	#4	11'-3	4	#4	11'-6
f5	str	3	#4	6'-0	3	#4	6'-3	4	#4	6'-6	4	#4	6'-9	4	#4	7'-0
f6	str	3	#4	7'-3	3	#4	7'-6	3	#4	8'-0	4	#4	8'-3	4	#4	8'-6
f7	str	3	#4	8'-3	3	#4	8'-9	3	#4	9'-3	3	#4	9'-6	3	#4	10'-0
f8	str	3	#4	9'-6	3	#4	10'-0	3	#4	10'-6	3	#4	11'-0	3	#4	11'-6
g	str	2	#4	9'-3	2	#4	9'-9	2	#4	10'-3	2	#4	10'-9	2	#4	11'-3
m1	str	4	#4	22'-0	4	#4	23'-0	4	#4	24'-0	5	#4	25'-3	5	#4	26'-3
m2	str	1	#4	22'-0	1	#4	23'-0	1	#4	24'-0	1	#4	25'-3	1	#4	26'-3
m3	str	4	#4	21'-9	4	#4	23'-0	4	#4	24'-3	5	#4	25'-6	5	#4	26'-6
m4	str	1	#4	21'-9	1	#4	23'-0	1	#4	24'-3	1	#4	25'-6	1	#4	26'-6
n1	str	4	#4	15'-9	4	#4	16'-6	4	#4	17'-6	5	#4	18'-3	5	#4	19'-3
n2	str	1	#4	15'-9	1	#4	16'-6	1	#4	17'-6	1	#4	18'-3	1	#4	19'-3
p	str	4	#5	10'-9	4	#5	11'-3	4	#5	11'-9	4	#5	12'-3	4	#5	12'-9
q	str	2	#6	12'-9	2	#6	13'-3	2	#6	13'-9	2	#6	14'-3	2	#6	14'-9
u	B	7	#4	5'-0	7	#4	5'-0	8	#4	5'-0	8	#4	5'-0	8	#4	5'-0
v	str	1	#4	19'-6	1	#4	20'-6	1	#4	21'-6	1	#4	22'-6	1	#4	23'-6
w	str	1	#4	17'-6	1	#4	18'-0	1	#4	19'-6	1	#4	20'-6	1	#4	21'-6

Mark	Bend	120" Dia. No	120" Size	120" Lgth	126" Dia. No	126" Size	126" Lgth	132" Dia. No	132" Size	132" Lgth	138" Dia. No	138" Size	138" Lgth	144" Dia. No	144" Size	144" Lgth
a1	A	5	#5	10'-3	5	#5	10'-9	5	#5	11'-0	5	#5	11'-6	5	#5	11'-9
a2	A	4	#5	11'-0	5	#5	11'-6	5	#5	11'-9	5	#5	12'-6	5	#6	12'-9
a3	A	4	#6	12'-0	4	#6	12'-6	5	#6	12'-9	5	#6	13'-3	5	#7	13'-9
a4	A	4	#6	12'-9	4	#6	13'-3	4	#7	13'-6	5	#7	14'-3	5	#7	14'-6
a5	A	4	#7	13'-9	4	#7	14'-3	4	#7	14'-6	4	#7	15'-0	5	#8	15'-6
a6	A	4	#7	14'-6	4	#8	15'-0	4	#8	15'-3	4	#8	16'-0	4	#8	16'-6
a7	A	4	#5	9'-3	4	#5	9'-6	5	#5	9'-9	5	#5	10'-3	5	#5	10'-6
a8	A	4	#5	10'-3	4	#5	10'-6	4	#5	10'-9	5	#5	11'-6	5	#5	11'-9
a9	A	4	#5	11'-3	4	#5	11'-6	4	#6	12'-0	4	#6	12'-6	5	#6	13'-0
a10	A	4	#6	12'-6	4	#6	12'-9	4	#7	13'-0	4	#7	13'-9	4	#7	14'-0
a11	A	4	#7	13'-6	4	#7	13'-9	4	#7	14'-3	4	#7	14'-9	4	#7	15'-3
a12	A	3	#7	14'-6	4	#8	14'-9	4	#8	15'-3	4	#8	16'-0	4	#8	16'-6
b1	str	2	#4	24'-3	2	#4	25'-3	2	#4	26'-6	2	#4	27'-6	2	#4	28'-6
b2	str	10	#4	24'-0	10	#4	25'-0	10	#4	26'-0	10	#4	27'-0	10	#4	28'-0
b3	str	2	#4	18'-0	2	#4	19'-6	2	#4	22'-6	2	#4	23'-0	2	#4	24'-0
b4	str	2	#4	10'-3	2	#4	11'-9	2	#4	14'-6	2	#4	15'-0	2	#4	16'-9
b5	str	2	#4	2'-6	2	#4	4'-3	2	#4	6'-6	2	#4	7'-0	2	#4	9'-3
b6	str													2	#4	2'-0
b7	str	2	#4	22'-6	2	#4	23'-9	2	#4	24'-9	2	#4	25'-9	2	#4	26'-9
b8	str	8	#4	22'-0	8	#4	23'-0	8	#4	24'-0	8	#4	25'-0	10	#4	26'-0
b9	str	2	#4	19'-0	2	#4	21'-3	2	#4	22'-6	2	#4	24'-6	2	#4	21'-0
b10	str	2	#4	13'-3	2	#4	15'-6	2	#4	16'-9	2	#4	19'-0	2	#4	15'-3
b11	str	2	#4	7'-9	2	#4	9'-9	2	#4	11'-0	2	#4	13'-6	2	#4	9'-3
b12	str	2	#4	2'-0	2	#4	4'-0	2	#4	5'-3	2	#4	8'-0	2	#4	3'-6
b13	str										2	#4	2'-6			
b14	str															
c	str	5	#4	13'-0	5	#4	13'-6	5	#4	14'-0	5	#4	14'-6	5	#4	15'-0
d	A	6	#7	15'-0	6	#7	15'-6	6	#8	16'-0	6	#8	16'-6	6	#8	17'-0
e1	C	5	#5	4'-6	5	#5	4'-9	5	#5	4'-9	5	#5	5'-0	5	#5	5'-3
e2	C	4	#5	5'-0	5	#5	5'-3	5	#5	5'-6	5	#6	5'-9	5	#6	6'-0
e3	C	4	#6	5'-9	4	#6	6'-0	5	#6	6'-0	5	#6	6'-3	5	#7	7'-6
e4	C	4	#6	6'-3	4	#6	6'-6	4	#6	6'-9	5	#7	8'-0	5	#7	8'-3
e5	C	4	#7	7'-9	4	#7	8'-0	4	#7	8'-3	4	#8	8'-6	5	#8	8'-9
e6	C	4	#7	8'-3	4	#7	8'-6	4	#7	8'-6	4	#8	9'-6	4	#8	9'-9
e7	C	4	#7	8'-6	4	#7	8'-9	4	#7	8'-9	4	#8	9'-9	4	#8	10'-0
e8	C	11	#7	8'-6	12	#7	8'-9	12	#7	8'-9	13	#8	9'-9	13	#8	10'-0
e9	C	6	#7	8'-6	6	#7	8'-9	6	#7	8'-9	6	#8	9'-9	6	#8	10'-0
e10	C	3	#7	8'-3	3	#7	8'-6	4	#7	8'-6	4	#8	9'-6	4	#8	9'-9
e11	C	3	#7	7'-9	4	#7	8'-0	4	#7	8'-3	4	#8	8'-6	4	#8	8'-9
e12	C	4	#6	6'-3	4	#6	6'-6	4	#6	6'-9	4	#7	8'-0	4	#7	8'-3
e13	C	4	#6	5'-9	4	#6	6'-0	4	#6	6'-0	4	#6	6'-3	4	#7	7'-6
e14	C	4	#5	5'-0	4	#5	5'-3	4	#5	5'-6	4	#6	5'-9	5	#6	6'-0
e15	C	4	#5	4'-6	4	#5	4'-9	4	#5	4'-9	5	#5	5'-0	5	#5	5'-3
f1	str	4	#4	8'-3	5	#4	8'-6	5	#4	9'-0	5	#4	9'-3	5	#4	9'-6
f2	str	4	#4	9'-6	4	#4	9'-9	5	#4	10'-6	5	#4	10'-6	5	#4	11'-0
f3	str	4	#4	10'-9	4	#4	11'-3	4	#4	12'-3	4	#4	12'-0	5	#4	12'-6
f4	str	4	#4	12'-0	4	#4	12'-6	4	#4	13'-0	4	#4	13'-6	4	#4	14'-0
f5	str	4	#4	7'-3	4	#4	7'-6	4	#4	7'-9	5	#4	8'-0	5	#4	8'-3
f6	str	4	#4	8'-9	4	#4	9'-0	4	#4	9'-6	4	#4	9'-9	5	#4	10'-0
f7	str	4	#4	10'-3	4	#4	10'-6	4	#4	11'-0	4	#4	11'-6	4	#4	12'-0
f8	str	3	#4	12'-0	4	#4	12'-3	4	#4	12'-9	4	#4	13'-3	4	#4	13'-6
g	str	2	#4	11'-9	2	#4	12'-3	2	#4	12'-9	2	#4	13'-3	2	#4	13'-9
m1	str	5	#4	27'-6	5	#4	28'-6	6	#4	29'-9	6	#4	31'-0	6	#4	32'-0
m2	str	1	#4	27'-6	1	#4	28'-6	1	#4	29'-9	1	#4	31'-0	1	#4	32'-0
m3	str	5	#4	27'-9	5	#4	29'-0	6	#4	30'-3	6	#4	31'-6	6	#4	32'-9
m4	str	1	#4	27'-9	1	#4	29'-0	1	#4	30'-3	1	#4	31'-6	1	#4	32'-9
n1	str	5	#4	20'-0	5	#4	21'-0	6	#4	22'-0	6	#4	22'-9	6	#4	23'-9
n2	str	1	#4	20'-0	1	#4	21'-0	1	#4	22'-0	1	#4	22'-9	1	#4	23'-9
p	str	4	#5	13'-3	4	#5	14'-3	4	#5	14'-9	4	#5	15'-3	4	#5	15'-9
q	str	2	#6	15'-3	2	#6	16'-3	2	#6	16'-9	2	#6	17'-3	2	#6	17'-9
u	B	9	#4	5'-0	9	#4	5'-0	9	#4	5'-0	10	#4	5'-0	10	#4	5'-0
v	str	1	#4	24'-6	1	#4	25'-6	1	#4	26'-6	1	#4	27'-6	1	#4	28'-6
w	str	1	#4	22'-6	1	#4	23'-6	1	#4	24'-6	1	#4	25'-6	1	#4	26'-6

Pipe Diameter

	90"	96"	102"	108"	114"	120"	126"	132"	138"	144"
A	0'- 3	0'- 3	0'- 3	0'- 3	0'- 3	0'- 3	0'- 3	0'- 3	0'- 3	0'- 3
B	2'- 2	2'- 2	2'- 3	2'- 3	2'- 4	2'- 4	2'- 5	2'- 5	2'- 6	2'- 6
C	1'-10	2'- 0	2'- 1	2'- 3	2'- 4	2'- 6	2'- 7	2'- 9	2'-10	3'- 0
D	2'- 4	2'- 6	2'- 8	2'-10	3'- 0	3'- 2	3'- 4	3'- 6	3'- 8	3'-10
E	6'- 4	6'- 8	7'- 0	7'- 4	7'- 8	8'- 0	8'- 4	8'- 8	9'- 0	9'- 4
F	19'- 0	20'- 0	21'- 0	22'- 0	23'- 0	24'- 0	25'- 0	26'- 0	27'- 0	28'- 0
G	5'- 0 5/8	5'- 3 3/4	5'- 6 3/4	5'- 9 7/8	6'- 1	6'- 4 1/8	6'- 7 1/4	6'-10 3/8	7'- 1 3/8	7'- 4 1/2
H	9'- 6	10'- 0	10'- 6	11'- 0	11'- 6	12'- 0	12'- 6	13'- 0	13'- 6	14'- 0
J	5'- 8	6'- 0	6'- 4	6'- 8	7'- 0	7'- 4	7'- 8	8'- 0	8'- 4	8'- 8
K	22'- 1 5/8	23'- 3 3/8	24'- 4 5/8	25'- 6 1/4	26'- 7 1/2	27'- 9 1/8	28'-11 1/4	30'- 0 7/8	31'- 2 1/8	32'- 3 3/4
L	7'- 2 1/4	7'- 7	7'-11 3/8	8'- 4 1/8	8'- 8 1/2	9'- 1 1/4	9'- 6 3/8	9'-11 1/4	10'- 3 1/2	10'- 8 1/4
M	4'- 6 3/4	4'- 9 7/8	5'- 0 5/8	5'- 3 3/4	5'- 6 3/8	5'- 9 1/2	6'- 1	6'- 4 1/8	6'- 6 3/4	6'- 9 7/8
N	0'- 3	0'- 3	0'- 3	0'- 3	0'- 3	0'- 3	0'- 3	0'- 3	0'- 3	0'- 3
P	9'- 0 1/8	9'- 6 3/8	9'-11 3/4	10'- 5 7/8	10'-11 3/8	11'- 5 1/2	12'- 0 1/2	12'- 6 5/8	13'- 0	13'- 6 1/4
R	17'- 0	18'- 0	19'- 0	20'- 0	21'- 0	22'- 0	23'- 0	24'- 0	25'- 0	26'- 0
S	5'- 0	5'- 3	5'- 6	5'- 9	6'- 0	6'- 3	6'- 6	6'- 9	7'- 0	7'- 3
T	21'-11 5/8	23'- 2 5/8	24'- 5	25'- 8	26'-10 3/8	28'- 1 3/8	29'- 5 1/4	30'- 8 1/4	31'-10 5/8	33'- 1 5/8
V	4'- 1 7/8	4'- 5	4'- 7 1/4	4'-10 3/8	5'- 0 3/4	5'- 3 7/8	5'- 7 3/4	5'-10 7/8	6'- 1 1/8	6'- 4 1/4
W	5'- 9 1/4	6'- 0 3/8	6'- 3 1/2	6'- 6 5/8	6'- 9 5/8	7'- 0 3/4	7'- 6	7'- 9 1/8	8'- 0 1/8	8'- 3 1/4
X	5'- 3 1/2	5'- 6 5/8	5'- 9 3/4	6'- 0 7/8	6'- 4	6'- 7 1/8	7'- 1	7'- 4 1/8	7'- 7 1/4	7'-10 3/8

QUANTITIES

PIPE Dia.	REINF Lbs.	CONCRETE C. Y.
90"	1610	30.9
96"	1825	34.1
102"	2100	37.3
108"	2380	40.8
114"	2790	44.3
120"	3050	48.0
126"	3370	55.1
132"	3710	59.3
138"	4300	63.7
144"	4715	68.3

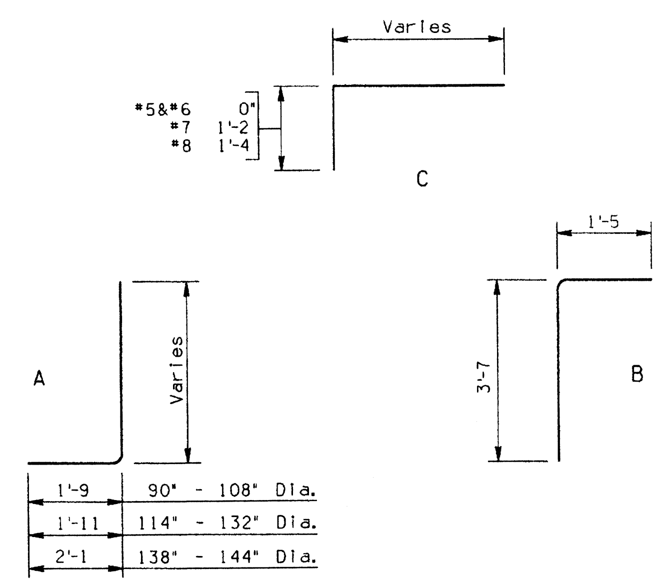

BENDS

NOTE:
Quantities and steel list shown are for one headwall.

NO	DESCRIPTION OF REVISIONS	MADE BY	DATE
1			
2			
3			
4			

DESIGN	K.W.	2-92
DRAWN	C.H.	4-92
CHECKED	G.K.	4-92

Registered Professional Engineer (Civil) Certificate No. 9910 F. DANIEL DAVIS Date Signed 5-14-92 Arizona U.S.A.

DESIGN APPROVED

APPROVED FOR DISTRIBUTION

ARIZONA
DEPARTMENT OF TRANSPORTATION
HIGHWAYS DIVISION
STANDARD DRAWINGS

INLET HEADWALLS
15° SKEW PIPE CULVERT
4:1 SLOPE

REVISION 4-92

STANDARD NO. B-13.30

ZF1:[051020]SB1330.DGN;2 VIEW NAME: BR
08-MAY-1992 07:39

STEEL LIST

Mark	Bend	90" Dia.			96" Dia.			102" Dia.			108" Dia.			114" Dia.			120" Dia.			126" Dia.			132" Dia.			138" Dia.			144" Dia.		
		No	Size	Lgth	No	Size	Lgth	No	Size	Lgth	No	Size	Lgth	No	Size	Lgth	No	Size	Lgth	No	Size	Lgth	No	Size	Lgth	No	Size	Lgth	No	Size	Lgth
a1	A	4	#5	9'-3	5	#5	9'-6	5	#5	10'-0	5	#5	10'-3	5	#5	11'-0	6	#5	11'-3	6	#5	11'-6	6	#5	12'-0	6	#6	12'-6	7	#6	12'-9
a2	A	4	#5	9'-9	5	#5	10'-0	5	#5	10'-6	5	#5	11'-0	5	#5	11'-6	6	#6	12'-0	6	#5	12'-3	6	#6	12'-9	6	#6	13'-3	7	#7	13'-6
a3	A	4	#5	10'-3	4	#5	10'-9	5	#5	11'-3	5	#6	11'-6	5	#6	12'-3	5	#6	12'-6	6	#6	13'-0	6	#6	13'-6	6	#7	14'-0	6	#7	14'-3
a4	A	4	#5	11'-0	4	#5	11'-3	4	#6	11'-9	5	#6	12'-3	5	#7	12'-9	5	#7	13'-3	5	#7	13'-6	6	#7	14'-0	6	#7	14'-6	6	#7	15'-3
a5	A	4	#5	11'-6	4	#6	12'-0	4	#6	12'-6	5	#7	12'-9	5	#7	13'-3	5	#7	13'-9	5	#7	14'-3	6	#7	14'-9	6	#7	15'-3	6	#8	16'-0
a6	A	4	#6	12'-0	4	#6	12'-6	4	#7	13'-0	4	#7	13'-6	5	#7	14'-0	5	#7	14'-6	5	#7	15'-0	5	#7	15'-6	6	#8	16'-0	6	#8	16'-9
a7	A	4	#5	8'-9	4	#5	9'-0	4	#5	9'-3	5	#5	9'-6	5	#5	10'-0	5	#5	10'-3	5	#5	10'-6	6	#5	10'-9	6	#5	11'-3	6	#5	11'-6
a8	A	4	#5	9'-3	4	#5	9'-9	4	#5	10'-0	4	#5	10'-3	5	#5	10'-9	5	#5	11'-0	5	#5	11'-3	5	#5	11'-6	6	#6	12'-3	6	#6	12'-6
a9	A	4	#5	10'-0	4	#5	10'-6	4	#5	10'-9	4	#5	11'-0	5	#6	11'-6	5	#6	11'-9	5	#5	12'-3	5	#6	12'-6	6	#6	13'-3	6	#7	13'-6
a10	A	3	#5	10'-9	4	#5	11'-3	4	#5	11'-6	4	#6	11'-9	4	#7	12'-3	5	#7	12'-6	5	#6	13'-0	5	#7	13'-6	5	#7	14'-0	6	#7	14'-6
a11	A	3	#5	11'-3	3	#6	11'-9	4	#6	12'-0	4	#7	12'-6	4	#7	13'-0	4	#7	13'-6	5	#7	14'-0	5	#7	14'-3	5	#7	15'-0	5	#8	15'-6
a12	A	3	#6	12'-0	3	#6	12'-6	4	#7	12'-9	4	#7	13'-3	4	#7	13'-9	4	#7	14'-3	5	#7	14'-9	5	#7	15'-3	5	#8	16'-0	5	#8	16'-6
b1	str	2	#4	23'-6	2	#4	25'-0	2	#4	26'-6	2	#4	28'-0	2	#4	29'-6	2	#4	31'-0	2	#4	32'-6	2	#4	34'-0	2	#4	35'-6	2	#4	37'-0
b2	str	8	#4	23'-6	8	#4	25'-0	10	#4	26'-6	10	#4	28'-0	10	#4	29'-6	10	#4	31'-0	12	#4	32'-6	12	#4	34'-0	12	#4	35'-6	12	#4	37'-0
b3	str	2	#4	19'-0	2	#4	23'-0	2	#4	12'-6	2	#4	19'-0	2	#4	24'-0	2	#4	28'-3	2	#4	20'-0	2	#4	24'-0	2	#4	29'-0	2	#4	34'-0
b4	str	2	#4	7'-0	2	#4	10'-0	2	#4	2'-3	2	#4	6'-0	2	#4	11'-6	2	#4	16'-6	2	#4	6'-0	2	#4	11'-0	2	#4	16'-6	2	#4	20'-3
b5	str																2	#4	5'-0							2	#4	4'-0	2	#4	6'-6
b6	str																														
b7	str	2	#4	20'-3	2	#4	21'-9	2	#4	23'-3	2	#4	24'-9	2	#4	26'-3	2	#4	27'-9	2	#4	29'-3	2	#4	31'-0	2	#4	32'-6	2	#4	34'-0
b8	str	8	#4	20'-0	8	#4	21'-6	8	#4	23'-0	8	#4	24'-6	10	#4	26'-0	10	#4	27'-6	10	#4	29'-0	10	#4	30'-6	10	#4	32'-0	10	#4	33'-6
b9	str	2	#4	13'-6	2	#4	17'-3	2	#4	19'-6	2	#4	23'-0	2	#4	18'-0	2	#4	20'-6	2	#4	23'-3	2	#4	29'-0	2	#4	30'-0	2	#4	32'-0
b10	str	2	#4	5'-0	2	#4	8'-6	2	#4	10'-9	2	#4	13'-6	2	#4	9'-0	2	#4	11'-9	2	#4	14'-6	2	#4	19'-0	2	#4	21'-3	2	#4	23'-3
b11	str							2	#4	2'-0	2	#4	4'-3				2	#4	3'-0	2	#4	6'-0	2	#4	9'-3	2	#4	12'-3	2	#4	14'-6
b12	str																									2	#4	3'-6	2	#4	6'-0
b13	str																														
b14	str																														
c	str	5	#4	10'-6	5	#4	11'-0	5	#4	11'-6	5	#4	12'-0	5	#4	12'-6	5	#4	13'-0	5	#4	13'-6	5	#4	14'-0	5	#4	14'-6	5	#4	15'-0
d	A	6	#6	12'-3	6	#6	12'-9	6	#7	13'-3	6	#7	13'-9	6	#7	14'-6	6	#7	15'-0	6	#7	15'-6	6	#7	16'-0	6	#8	16'-6	6	#8	17'-0
e1	C	6	#5	4'-3	5	#5	4'-3	5	#5	4'-6	5	#5	4'-9	5	#5	4'-9	6	#5	5'-0	6	#5	5'-0	6	#5	5'-3	6	#5	5'-6	7	#5	5'-9
e2	C	6	#5	4'-6	4	#5	4'-6	5	#5	4'-9	5	#5	5'-0	5	#5	5'-0	5	#5	5'-3	6	#5	5'-3	6	#5	5'-9	6	#6	6'-0	6	#6	6'-3
e3	C	6	#5	4'-9	4	#5	4'-9	5	#5	5'-0	5	#5	5'-3	5	#5	5'-6	5	#5	5'-9	6	#6	5'-9	6	#6	6'-3	6	#6	6'-6	6	#6	6'-9
e4	C	6	#5	5'-0	4	#5	5'-0	4	#5	5'-3	5	#5	5'-6	5	#6	5'-9	5	#6	6'-0	5	#6	6'-3	6	#6	6'-6	6	#7	7'-9	6	#7	8'-0
e5	C				4	#5	5'-3	4	#5	5'-6	4	#5	5'-9	5	#6	6'-3	5	#6	6'-6	5	#6	6'-6	5	#7	7'-9	6	#7	8'-0	6	#7	8'-3
e6	C				4	#5	5'-6	4	#6	5'-9	4	#6	6'-0	5	#6	6'-6	5	#6	6'-9	5	#7	7'-9	5	#7	8'-3	6	#8	8'-6	6	#8	8'-9
e7	C	3	#5	5'-3	3	#5	5'-9	3	#6	6'-0	3	#6	6'-3	3	#7	7'-6	4	#7	7'-9	4	#7	8'-3	4	#7	8'-6	4	#8	9'-0	4	#8	9'-6
e8	C	9	#5	5'-3	9	#5	5'-9	10	#6	6'-0	10	#6	6'-3	11	#7	7'-6	11	#7	7'-9	12	#7	8'-3	12	#7	8'-6	13	#8	9'-0	13	#8	9'-6
e9	C	5	#5	5'-3	5	#5	5'-9	5	#6	6'-0	5	#6	6'-3	5	#7	7'-6	5	#7	7'-9	5	#7	8'-3	5	#7	8'-6	5	#8	9'-0	5	#8	9'-6
e10	C	5	#5	5'-0	3	#5	5'-6	3	#6	5'-9	4	#6	6'-0	4	#6	6'-6	4	#6	6'-9	4	#7	7'-9	5	#7	8'-3	5	#8	8'-6	5	#8	9'-0
e11	C	5	#5	4'-9	3	#5	5'-3	4	#5	5'-6	4	#5	5'-9	4	#6	6'-3	4	#6	6'-6	5	#6	6'-6	5	#7	7'-9	5	#7	8'-0	5	#7	8'-6
e12	C	5	#5	4'-6	4	#5	5'-0	4	#5	5'-3	4	#5	5'-6	4	#6	5'-9	5	#6	6'-0	5	#6	6'-3	5	#6	7'-6	5	#7	7'-9	6	#7	8'-0
e13	C	5	#5	4'-3	4	#5	4'-9	4	#5	5'-0	4	#5	5'-3	4	#5	5'-6	5	#5	5'-9	5	#6	5'-9	5	#6	6'-3	5	#6	6'-6	6	#6	6'-9
e14	C				4	#5	4'-6	4	#5	4'-9	4	#5	5'-0	5	#5	5'-0	5	#5	5'-3	5	#5	5'-3	5	#5	5'-9	6	#6	6'-0	6	#6	6'-3
e15	C				4	#5	4'-3	4	#5	4'-6	5	#5	4'-9	5	#5	4'-9	5	#5	5'-0	5	#5	5'-0	6	#5	5'-3	6	#5	5'-6	6	#5	5'-9
f1	str	4	#4	7'-6	5	#4	7'-9	5	#4	8'-0	5	#4	8'-6	5	#4	9'-0	6	#4	9'-3	6	#4	9'-6	6	#4	10'-0	6	#4	10'-3	7	#4	10'-6
f2	str	4	#4	8'-3	4	#4	8'-6	5	#4	9'-0	5	#4	9'-3	5	#4	9'-9	5	#4	10'-3	6	#4	10'-6	6	#4	11'-0	6	#4	11'-3	6	#4	11'-9
f3	str	4	#4	9'-3	4	#4	9'-6	4	#4	10'-0	5	#4	10'-3	5	#4	10'-9	5	#4	11'-3	5	#4	11'-6	6	#4	12'-0	6	#4	12'-6	6	#4	13'-0
f4	str	4	#4	10'-0	4	#4	10'-6	4	#4	11'-0	4	#4	11'-3	5	#4	11'-9	5	#4	12'-3	5	#4	12'-9	5	#4	13'-3	6	#4	13'-9	6	#4	14'-3
f5	str	4	#4	7'-0	4	#4	7'-3	4	#4	7'-6	5	#4	7'-9	5	#4	8'-0	5	#4	8'-3	5	#4	8'-6	6	#4	8'-9	6	#4	9'-0	6	#4	9'-3
f6	str	4	#4	8'-0	4	#4	8'-3	4	#4	8'-6	4	#4	9'-0	5	#4	9'-3	5	#4	9'-6	5	#4	10'-0	5	#4	10'-3	6	#4	10'-6	6	#4	11'-0
f7	str	3	#4	9'-0	4	#4	9'-6	4	#4	9'-9	4	#4	10'-0	4	#4	10'-6	5	#4	11'-0	5	#4	11'-3	5	#4	11'-9	5	#4	12'-3	6	#4	12'-6
f8	str	3	#4	10'-0	3	#4	10'-6	4	#4	10'-9	4	#4	11'-3	4	#4	11'-9	4	#4	12'-3	5	#4	12'-9	5	#4	13'-3	5	#4	13'-9	5	#4	14'-3
g	str	2	#4	9'-3	2	#4	9'-9	2	#4	10'-3	2	#4	10'-9	2	#4	11'-3	2	#4	11'-9	2	#4	12'-3	2	#4	12'-9	2	#4	13'-3	2	#4	13'-9
m1	str	4	#4	26'-3	4	#4	27'-9	4	#4	29'-3	5	#4	31'-0	5	#4	32'-6	5	#4	34'-3	5	#4	36'-0	6	#4	37'-6	6	#4	39'-0	6	#4	40'-9
m2	str	1	#4	26'-3	1	#4	27'-9	1	#4	29'-3	1	#4	31'-0	1	#4	32'-6	1	#4	34'-3	1	#4	36'-0	1	#4	37'-6	1	#4	39'-0	1	#4	40'-9
m3	str	4	#4	24'-3	4	#4	26'-0	4	#4	27'-6	5	#4	29'-3	5	#4	31'-0	5	#4	32'-9	5	#4	34'-6	6	#4	36'-3	6	#4	38'-0	6	#4	39'-9
m4	str	1	#4	24'-3	1	#4	26'-0	1	#4	27'-6	1	#4	29'-3	1	#4	31'-0	1	#4	32'-9	1	#4	34'-6	1	#4	36'-3	1	#4	38'-0	1	#4	39'-9
n1	str	4	#4	15'-0	4	#4	15'-9	4	#4	16'-9	5	#4	17'-9	5	#4	18'-6	5	#4	19'-3	5	#4	20'-3	6	#4	21'-3	6	#4	22'-0	6	#4	23'-0
n2	str	1	#4	15'-0	1	#4	15'-9	1	#4	16'-9	1	#4	17'-9	1	#4	18'-6	1	#4	19'-3	1	#4	20'-3	1	#4	21'-3	1	#4	22'-0	1	#4	23'-0
p	str	4	#5	10'-9	4	#5	11'-3	4	#5	11'-9	4	#5	12'-3	4	#5	12'-9	4	#5	13'-3	4	#5	14'-3	4	#5	14'-9	4	#5	15'-3	4	#5	15'-9
q	str	2	#6	12'-9	2	#6	13'-3	2	#6	13'-9	2	#6	14'-3	2	#6	14'-9	2	#6	15'-3	2	#6	16'-3	2	#6	16'-9	2	#6	17'-3	2	#6	17'-9
u	B	7	#4	5'-0	7	#4	5'-0	8	#4	5'-0	8	#4	5'-0	8	#4	5'-0	9	#4	5'-0	9	#4	5'-0	9	#4	5'-0	10	#4	5'-0	10	#4	5'-0
v	str	1	#4	23'-6	1	#4	25'-0	1	#4	26'-6	1	#4	28'-0	1	#4	29'-6	1	#4	31'-0	1	#4	32'-6	1	#4	34'-0	1	#4	35'-6	1	#4	37'-0
w	str	1	#4	20'-0	1	#4	21'-6	1	#4	23'-0	1	#4	24'-6	1	#4	26'-0	1	#4	27'-6	1	#4	29'-0	1	#4	30'-6	1	#4	32'-0	1	#4	33'-6

Pipe Diameter

	90"	96"	102"	108"	114"	120"	126"	132"	138"	144"
A	0'- 3	0'- 6	0'- 3	0'- 6	0'- 3	0'- 6	0'- 3	0'- 6	0'- 3	0'- 6
B	2'- 2	2'- 2	2'- 3	2'- 3	2'- 4	2'- 4	2'- 5	2'- 5	2'- 6	2'- 6
C	2'- 4	2'- 6	2'- 7	2'- 9	2'-10	3'- 0	3'- 1	3'- 3	3'- 4	3'- 6
D	1'- 2	1'- 4	1'- 6	1'- 8	1'-10	2'- 0	2'- 2	2'- 4	2'- 6	2'- 8
E	5'- 8	6'- 0	6'- 4	6'- 8	7'- 0	7'- 4	7'- 8	8'- 0	8'- 4	8'- 8
F	23'- 6	25'- 0	26'- 6	28'- 0	29'- 6	31'- 0	32'- 6	34'- 0	35'- 6	37'- 0
G	5'- 0 5/8	5'- 3 3/4	5'- 6 3/4	5'- 9 7/8	6'- 1	6'- 4 1/8	6'- 7 1/4	6'-10 3/8	7'- 1 3/8	7'- 4 1/2
H	9'- 6	10'- 0	10'- 6	11'- 0	11'- 6	12'- 0	12'- 6	13'- 0	13'- 6	14'- 0
J	6'- 6	6'-10	7'- 2	7'- 6	8'- 0	8'- 4	8'- 8	9'- 0	9'- 4	9'- 8
K	26'- 4 3/8	28'- 0	29'- 7 1/4	31'- 2 7/8	32'-10 1/8	34'- 5 7/8	36'- 1 7/8	37'- 9 1/2	39'- 4 3/4	41'- 0 1/2
L	6'-11	7'- 3 3/4	7'- 8 1/8	8'- 0 7/8	8'- 5 1/8	8'-10	9'- 3 1/8	9'- 7 7/8	10'- 0 1/4	10'- 5
M	4'- 6 3/4	4'- 9 7/8	5'- 0 5/8	5'- 3 3/4	5'- 6 3/8	5'- 9 1/2	6'- 1	6'- 4 1/8	6'- 6 3/4	6'- 9 7/8
N	0'- 6	0'- 3	0'- 6	0'- 3	0'- 6	0'- 3	0'- 6	0'- 3	0'- 6	0'- 3
P	8'- 6	9'- 0 1/4	9'- 5 5/8	9'-11 3/4	10'- 5 1/4	10'-11 3/8	11'- 6 1/4	12'- 0 1/2	12'- 5 7/8	13'- 0 1/8
R	20'- 0	21'- 6	23'- 0	24'- 6	26'- 0	27'- 6	29'- 0	30'- 6	32'- 0	33'- 6
S	6'- 0	6'- 3	6'- 6	6'- 9	7'- 0	7'- 3	7'- 6	7'- 9	8'- 0	8'- 3
T	24'- 5 3/8	26'- 2 1/2	27'-10 3/4	29'- 7 7/8	31'- 4 1/8	33'- 1 1/4	34'-11 1/8	36'- 8 1/8	38'- 4 1/2	40'- 1 1/2
V	4'- 1 7/8	4'- 5	4'- 7 1/4	4'-10 3/8	5'- 0 3/4	5'- 3 7/8	5'- 7 3/4	5'-10 7/8	6'- 1 1/8	6'- 4 1/4
W	5'- 9 1/4	6'- 0 3/8	6'- 3 1/2	6'- 6 5/8	6'- 9 5/8	7'- 0 3/4	7'- 6	7'- 9 1/8	8'- 0 1/8	8'- 3 1/4
X	5'- 3 1/2	5'- 6 5/8	5'- 9 3/4	6'- 0 7/8	6'- 4	6'- 7 1/8	7'- 1	7'- 4 1/8	7'- 7 1/4	7'-10 3/8

QUANTITIES

PIPE Dia.	REINF Lbs.	CONCRETE C.Y.
90"	1875	35.0
96"	2075	38.9
102"	2465	43.0
108"	2835	47.4
114"	3335	52.0
120"	3630	56.7
126"	3900	65.9
132"	4430	71.4
138"	5340	77.1
144"	5890	83.1

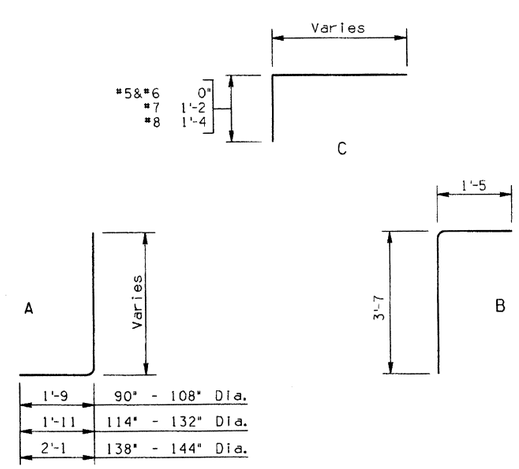

BENDS

NOTE:
Quantities and steel list shown are for one headwall.

DESIGN	K.W.	2-92	NO
DRAWN	C.H.	4-92	1
CHECKED	G.K.	4-92	2
			3
			4

DESCRIPTION OF REVISIONS | MADE BY | DATE

DESIGN APPROVED

APPROVED FOR DISTRIBUTION

ARIZONA
DEPARTMENT OF TRANSPORTATION
HIGHWAYS DIVISION
STANDARD DRAWINGS

INLET HEADWALLS
15° SKEW PIPE CULVERT
6:1 SLOPE

REVISION 4-92

STANDARD NO. B-13.40

ZF1:(051020)SB1340.DGN;2 VIEW NAME: BR
08-MAY-1992 07:40

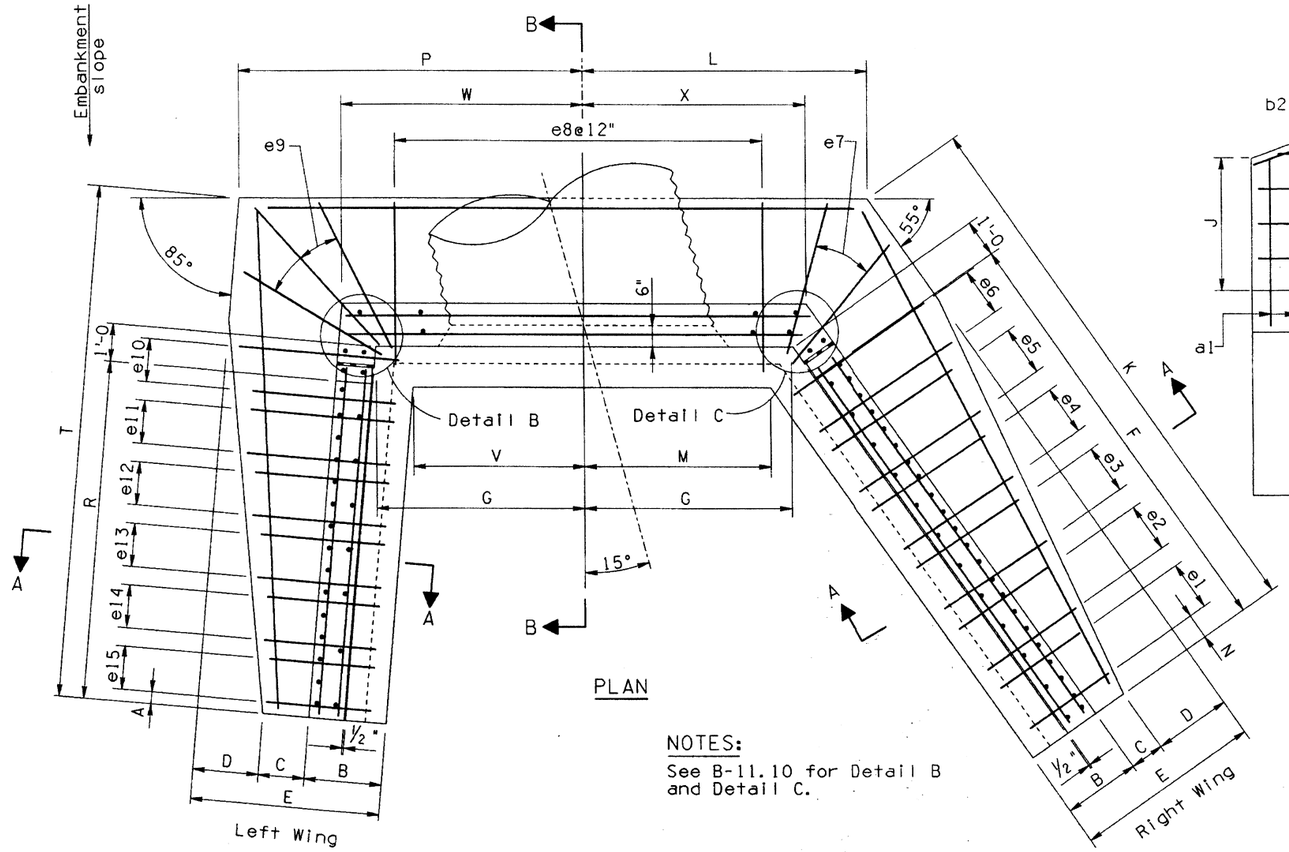

PLAN

NOTES:

See B-11.10 for Detail B and Detail C.

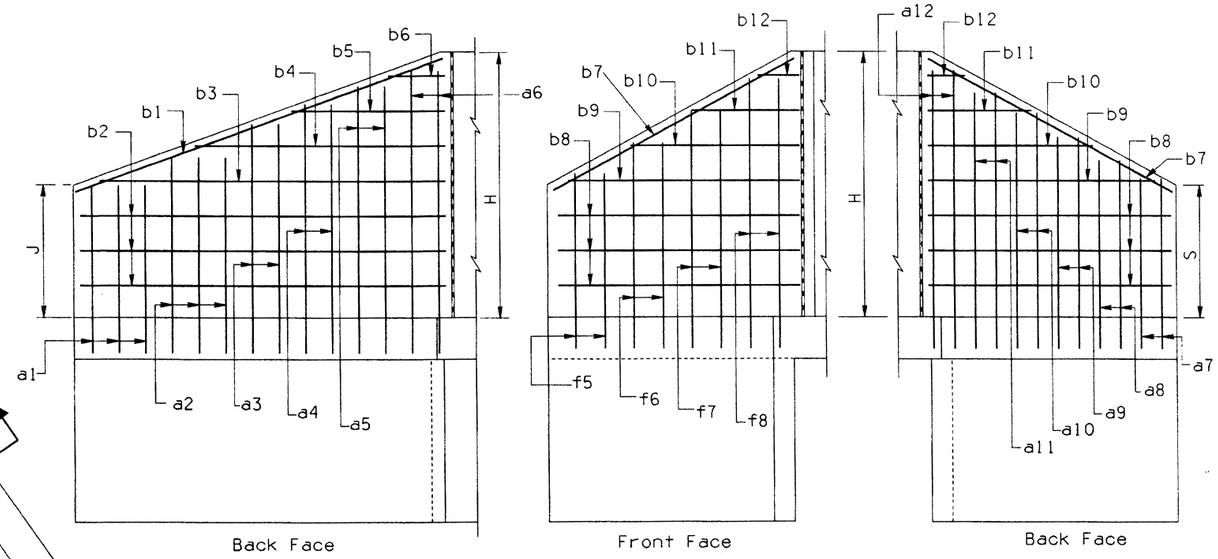

RIGHT WING ELEVATION

LEFT WING ELEVATION

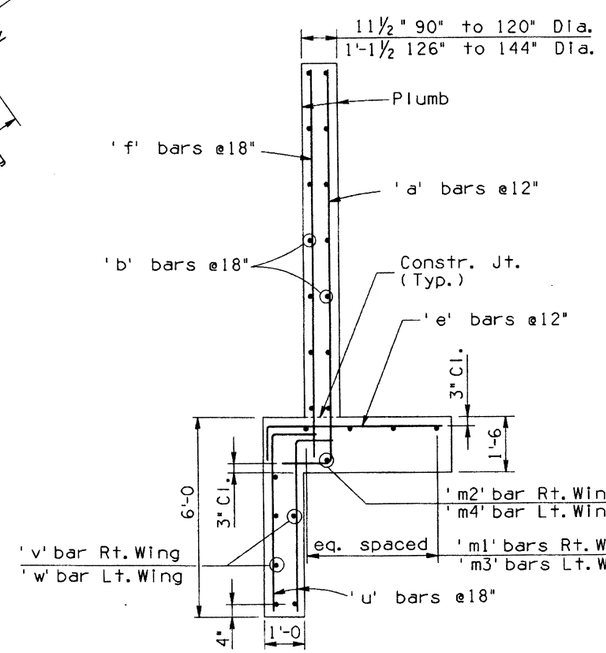

SECTION A-A

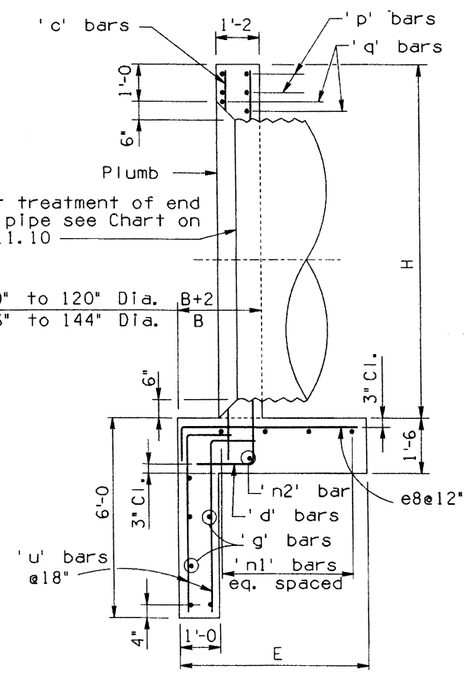

SECTION B-B

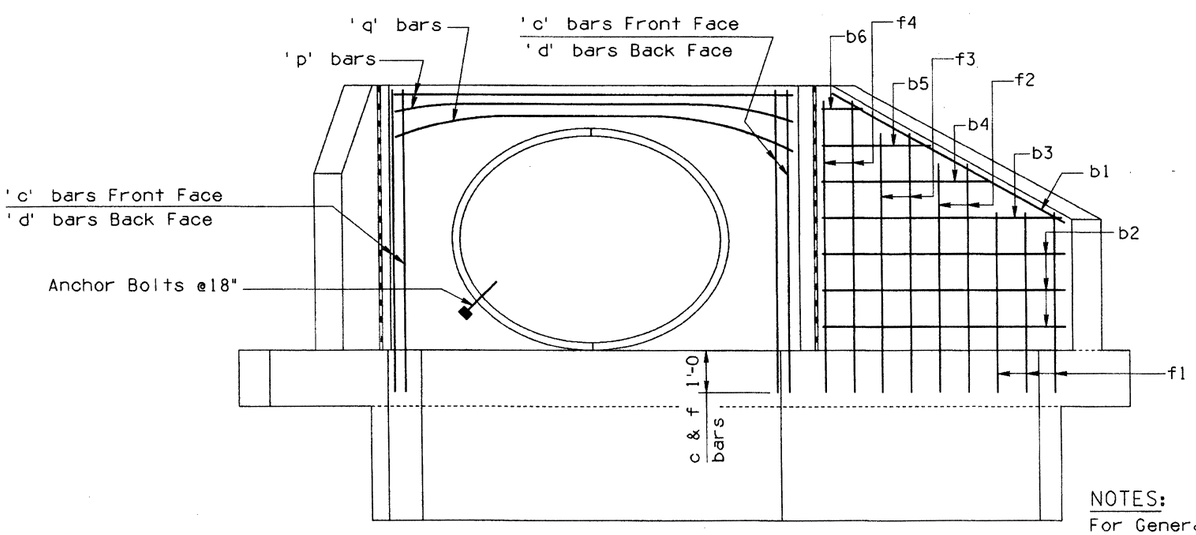

ELEVATION

NOTES:

For General Notes and Misc. Details see B-11.10. For steel list and bend diagrams see B-13.60, B-13.70 or B-13.80.

DESIGN	W.S.	4-92	NO	DESCRIPTION OF REVISIONS	MADE BY	DATE
DRAWN	J.M. & C.H.	4-92	1			
CHECKED	G.K.	4-92	2			
			3			
			4			

	DESIGN APPROVED	ARIZONA DEPARTMENT OF TRANSPORTATION HIGHWAYS DIVISION STANDARD DRAWINGS	REVISION
	APPROVED FOR DISTRIBUTION	OUTLET HEADWALLS 15° SKEW PIPE CULVERT	STANDARD NO. B-13.50

ZF1:(0510203SB1350.DGN:1 VIEW NAME: BR
08-MAY-1992 07:43

STEEL LIST

Mark	Bend	90" Dia.			96" Dia.			102" Dia.			108" Dia.			114" Dia.			120" Dia.			126" Dia.			132" Dia.			138" Dia.			144" Dia.		
		No	Size	Lgth	No	Size	Lgth	No	Size	Lgth	No	Size	Lgth	No	Size	Lgth	No	Size	Lgth	No	Size	Lgth	No	Size	Lgth	No	Size	Lgth	No	Size	Lgth
a1	A	3	#5	5'-6	3	#5	6'-0	3	#5	6'-3	3	#5	6'-3	4	#5	6'-9	4	#5	7'-0	4	#5	7'-3	4	#5	7'-9	4	#5	7'-9	4	#5	8'-0
a2	A	3	#5	6'-9	3	#5	7'-3	3	#5	7'-6	3	#5	7'-6	3	#5	8'-3	3	#5	8'-6	4	#5	8'-9	4	#5	9'-3	4	#5	9'-3	4	#5	9'-6
a3	A	3	#5	8'-0	3	#5	8'-6	3	#5	8'-9	3	#5	9'-0	3	#5	9'-6	3	#5	10'-0	3	#6	10'-3	3	#6	10'-9	4	#6	11'-0	4	#6	11'-3
a4	A	3	#5	9'-3	3	#5	10'-0	3	#5	10'-3	3	#5	10'-3	3	#6	11'-0	3	#6	11'-3	3	#7	11'-9	3	#7	12'-3	3	#7	12'-6	3	#7	13'-0
a5	A	3	#5	10'-9	3	#6	11'-3	3	#6	11'-6	3	#6	11'-9	3	#7	12'-3	3	#7	12'-9	3	#7	13'-3	3	#7	13'-9	3	#8	14'-3	3	#8	14'-6
a6	A	2	#6	12'-0	2	#6	12'-6	3	#6	12'-9	3	#7	13'-0	3	#7	13'-9	3	#7	14'-3	3	#8	14'-9	3	#8	15'-3	3	#8	15'-9	3	#8	16'-3
a7	A	3	#5	5'-6	3	#5	5'-9	3	#5	6'-0	3	#5	6'-3	3	#5	6'-9	3	#5	6'-9	3	#5	7'-3	3	#5	7'-9	3	#5	7'-9	3	#5	8'-0
a8	A	3	#5	7'-0	3	#5	7'-6	3	#5	7'-9	3	#5	7'-9	3	#5	8'-6	3	#5	8'-3	3	#5	8'-9	3	#5	9'-3	3	#5	9'-3	3	#5	9'-6
a9	A	3	#5	8'-6	3	#5	9'-3	3	#5	9'-3	3	#5	9'-6	3	#5	10'-3	3	#5	9'-9	3	#5	10'-3	3	#6	10'-9	3	#6	11'-0	3	#6	11'-3
a10	A	2	#5	10'-3	3	#6	10'-9	3	#6	11'-0	3	#6	11'-0	3	#6	11'-9	3	#6	11'-6	3	#6	12'-0	3	#7	12'-3	3	#7	12'-6	3	#7	13'-0
a11	A	2	#6	11'-9	2	#6	12'-6	2	#6	12'-9	3	#7	12'-9	3	#7	13'-6	2	#7	13'-3	2	#7	13'-6	3	#7	13'-9	3	#8	14'-3	3	#8	14'-6
a12	A																2	#7	14'-6	2	#8	15'-0	2	#8	15'-3	2	#8	15'-9	3	#8	16'-3
b1	str	2	#4	17'-0	2	#4	17'-6	2	#4	18'-0	2	#4	18'-9	2	#4	19'-3	2	#4	19'-9	2	#4	20'-6	2	#4	21'-0	2	#4	21'-6	2	#4	22'-0
b2	str	4	#4	16'-0	4	#4	16'-6	4	#4	17'-0	4	#4	17'-6	4	#4	18'-0	4	#4	18'-6	6	#4	19'-0	6	#4	19'-6	6	#4	20'-0	6	#4	20'-6
b3	str	2	#4	12'-6	2	#4	14'-0	2	#4	14'-6	2	#4	15'-6	2	#4	16'-9	2	#4	17'-9	2	#4	15'-3	2	#4	16'-6	2	#4	18'-0	2	#4	18'-6
b4	str	2	#4	9'-0	2	#4	10'-9	2	#4	11'-3	2	#4	12'-3	2	#4	13'-6	2	#4	14'-3	2	#4	12'-0	2	#4	13'-3	2	#4	14'-6	2	#4	15'-6
b5	str	2	#4	6'-0	2	#4	7'-3	2	#4	8'-3	2	#4	8'-9	2	#4	10'-3	2	#4	11'-0	2	#4	8'-9	2	#4	10'-0	2	#4	11'-0	2	#4	12'-0
b6	str	2	#4	2'-6	2	#4	3'-9	2	#4	5'-0	2	#4	5'-6	2	#4	7'-0	2	#4	7'-6	2	#4	5'-6	2	#4	6'-6	2	#4	7'-6	2	#4	9'-0
b7	str	2	#4	14'-0	2	#4	14'-6	2	#4	15'-0	2	#4	15'-9	2	#4	16'-3	2	#4	16'-9	2	#4	17'-3	2	#4	18'-0	2	#4	18'-6	2	#4	19'-0
b8	str	4	#4	12'-6	4	#4	13'-0	4	#4	13'-6	4	#4	14'-0	4	#4	14'-6	6	#4	15'-0	6	#4	15'-6	6	#4	16'-0	6	#4	16'-6	6	#4	17'-0
b9	str	2	#4	10'-0	2	#4	10'-9	2	#4	11'-6	2	#4	12'-6	2	#4	13'-6	2	#4	14'-6	2	#4	13'-3	2	#4	14'-3	2	#4	15'-0	2	#4	16'-0
b10	str	2	#4	7'-3	2	#4	8'-0	2	#4	9'-0	2	#4	10'-0	2	#4	10'-9	2	#4	10'-9	2	#4	10'-6	2	#4	11'-6	2	#4	12'-3	2	#4	13'-0
b11	str	2	#4	4'-6	2	#4	5'-3	2	#4	6'-6	2	#4	7'-3	2	#4	8'-3	2	#4	7'-3	2	#4	7'-9	2	#4	8'-9	2	#4	9'-3	2	#4	10'-3
b12	str	2	#4	1'-9	2	#4	2'-6	2	#4	4'-0	2	#4	4'-9	2	#4	5'-6	2	#4	3'-6	2	#4	5'-0	2	#4	6'-0	2	#4	6'-6	2	#4	7'-3
c	str	5	#4	10'-6	5	#4	11'-0	5	#4	11'-6	5	#4	12'-0	5	#4	12'-6	5	#4	13'-0	5	#4	13'-6	5	#4	14'-0	5	#4	14'-6	5	#4	15'-0
d	A	6	#6	12'-3	6	#6	12'-9	6	#6	13'-3	6	#7	13'-9	6	#7	14'-6	6	#7	15'-0	6	#8	15'-6	6	#8	16'-0	6	#8	16'-6	6	#8	17'-0
e1	C	3	#5	3'-3	3	#5	3'-3	3	#5	3'-3	3	#5	3'-3	3	#5	3'-3	3	#5	3'-3	4	#5	3'-6	4	#5	3'-6	4	#5	3'-6	4	#5	3'-6
e2	C	3	#5	3'-9	3	#5	4'-0	3	#5	4'-0	3	#5	4'-0	3	#5	4'-0	3	#5	4'-3	3	#5	4'-6	3	#5	4'-6	4	#5	4'-6	4	#5	4'-6
e3	C	3	#5	4'-6	3	#5	4'-6	3	#5	4'-9	3	#5	4'-9	3	#5	5'-0	3	#5	5'-3	3	#5	5'-6	3	#6	5'-6	3	#6	5'-9	3	#6	5'-9
e4	C	3	#5	5'-0	3	#5	5'-3	3	#5	5'-6	3	#5	5'-9	3	#6	5'-9	3	#6	6'-0	3	#6	6'-3	3	#7	7'-9	3	#7	8'-0	3	#7	8'-3
e5	C	2	#5	5'-6	2	#6	6'-0	3	#6	6'-3	3	#6	6'-6	3	#7	7'-9	3	#7	8'-3	3	#7	8'-6	3	#7	8'-9	3	#7	9'-0	3	#8	9'-3
e6	C	2	#5	6'-3	2	#6	6'-9	2	#6	7'-0	2	#7	8'-6	3	#7	9'-0	3	#7	9'-3	3	#8	9'-9	3	#8	10'-0	3	#8	10'-3	3	#9	11'-0
e7	C	3	#6	6'-6	3	#6	7'-0	3	#6	7'-3	4	#7	8'-9	4	#7	9'-3	4	#7	9'-9	4	#8	10'-0	5	#8	10'-3	5	#9	11'-0	5	#9	11'-3
e8	C	9	#6	6'-6	9	#6	7'-0	10	#6	7'-3	10	#7	8'-9	11	#7	9'-3	11	#7	9'-9	12	#8	10'-0	12	#8	10'-3	13	#9	11'-0	13	#9	11'-3
e9	C	4	#6	6'-6	4	#6	7'-0	4	#6	7'-3	5	#7	8'-9	5	#7	9'-3	5	#7	9'-9	5	#8	10'-0	6	#8	10'-3	6	#9	11'-0	6	#9	11'-3
e10	C	2	#5	6'-3	2	#5	6'-9	2	#6	7'-0	2	#6	7'-3	3	#7	8'-3	3	#7	8'-6	2	#7	9'-6	2	#7	9'-6	2	#8	10'-6	2	#8	10'-9
e11	C	2	#5	5'-6	2	#5	5'-9	3	#5	6'-0	3	#5	6'-3	3	#6	6'-6	3	#6	6'-9	2	#7	8'-6	2	#7	8'-9	3	#7	9'-3	3	#7	9'-3
e12	C	3	#5	4'-9	3	#5	5'-0	3	#5	5'-0	3	#5	5'-3	3	#5	5'-3	3	#5	5'-6	3	#6	6'-3	3	#6	6'-6	3	#6	6'-9	3	#6	8'-3
e13	C	3	#5	4'-0	3	#5	4'-0	3	#5	4'-3	3	#5	4'-3	3	#5	4'-3	3	#5	4'-6	3	#5	5'-6	3	#5	5'-6	3	#5	5'-9	3	#5	5'-9
e14	C	3	#5	3'-3	3	#5	3'-3	3	#5	3'-3	3	#5	3'-3	3	#5	3'-3	3	#5	3'-3	3	#5	4'-6	3	#5	4'-6	3	#5	4'-6	3	#5	4'-6
e15	C																			3	#5	3'-6	3	#5	3'-6	3	#5	3'-6	3	#5	3'-6
f1	str	3	#4	3'-9	3	#4	4'-3	3	#4	4'-3	3	#4	4'-6	3	#4	4'-9	4	#4	5'-0	4	#4	5'-3	4	#4	5'-9	4	#4	5'-9	4	#4	6'-0
f2	str	3	#4	5'-9	3	#4	6'-3	3	#4	6'-3	3	#4	6'-6	3	#4	6'-9	3	#4	7'-3	3	#4	7'-6	3	#4	8'-0	4	#4	8'-3	4	#4	8'-6
f3	str	3	#4	7'-6	3	#4	8'-3	3	#4	8'-3	3	#4	8'-6	3	#4	9'-0	3	#4	9'-3	3	#4	9'-9	3	#4	10'-3	3	#4	10'-6	3	#4	11'-0
f4	str	2	#4	9'-6	2	#4	10'-3	3	#4	10'-3	3	#4	10'-6	3	#4	11'-0	3	#4	11'-6	3	#4	12'-0	3	#4	12'-6	3	#4	13'-0	3	#4	13'-6
f5	str	3	#4	3'-9	3	#4	4'-3	3	#4	4'-6	3	#4	4'-6	3	#4	5'-0	3	#4	5'-3	3	#4	5'-3	3	#4	5'-9	3	#4	6'-0	3	#4	6'-3
f6	str	2	#4	5'-6	2	#4	6'-0	2	#4	6'-6	3	#4	6'-9	3	#4	7'-3	3	#4	7'-6	3	#4	7'-9	3	#4	8'-3	3	#4	8'-6	3	#4	8'-9
f7	str	2	#4	7'-6	2	#4	8'-0	2	#4	8'-6	2	#4	9'-0	2	#4	9'-3	2	#4	9'-6	3	#4	10'-0	3	#4	10'-6	3	#4	11'-0	3	#4	11'-0
f8	str	2	#4	9'-6	2	#4	10'-0	2	#4	10'-6	2	#4	11'-3	2	#4	11'-6	2	#4	11'-9	2	#4	12'-6	2	#4	13'-0	2	#4	13'-6	3	#4	13'-6
g	str	6	#4	9'-6	6	#4	10'-0	6	#4	10'-3	6	#4	10'-9	6	#4	11'-3	6	#4	11'-9	6	#4	12'-6	6	#4	13'-0	6	#4	13'-3	6	#4	14'-0
m1	str	4	#4	19'-9	4	#4	20'-6	4	#4	21'-0	5	#4	21'-9	5	#4	22'-3	5	#4	23'-0	5	#4	23'-9	6	#4	24'-3	6	#4	25'-0	6	#4	25'-9
m2	str	1	#4	19'-9	1	#4	20'-6	1	#4	21'-0	1	#4	21'-9	1	#4	22'-3	1	#4	23'-0	1	#4	23'-9	1	#4	24'-3	1	#4	25'-0	1	#4	25'-9
m3	str	4	#4	18'-6	4	#4	19'-3	4	#4	20'-0	5	#4	20'-9	5	#4	21'-6	5	#4	22'-3	5	#4	23'-3	6	#4	24'-0	6	#4	24'-9	6	#4	25'-6
m4	str	1	#4	18'-6	1	#4	19'-3	1	#4	20'-0	1	#4	20'-9	1	#4	21'-6	1	#4	22'-3	1	#4	23'-3	1	#4	24'-0	1	#4	24'-9	1	#4	25'-6
n1	str	4	#4	17'-9	4	#4	18'-9	4	#4	19'-9	5	#4	20'-9	5	#4	21'-9	5	#4	22'-9	5	#4	23'-9	6	#4	24'-9	6	#4	25'-9	6	#4	26'-9
n2	str	1	#4	17'-9	1	#4	18'-9	1	#4	19'-9	1	#4	20'-9	1	#4	21'-9	1	#4	22'-9	1	#4	23'-9	1	#4	24'-9	1	#4	25'-9	1	#4	26'-9
p	str	4	#5	11'-0	4	#5	11'-6	4	#5	12'-0	4	#5	12'-9	4	#5	13'-3	4	#5	13'-6	4	#5	14'-6	4	#5	15'-0	4	#5	15'-6	4	#5	16'-0
q	str	2	#6	13'-0	2	#6	13'-6	2	#6	14'-0	2	#6	14'-9	2	#6	15'-3	2	#6	15'-6	2	#6	16'-6	2	#6	17'-0	2	#6	17'-6	2	#6	18'-0
u	B	52	#4	7'-0	54	#4	7'-0	56	#4	7'-0	58	#4	7'-0	60	#4	7'-0	62	#4	7'-0	64	#4	7'-0	66	#4	7'-0	68	#4	7'-0	70	#4	7'-0
v	str	6	#4	16'-3	6	#4	16'-9	6	#4	17'-3	6	#4	17'-9	6	#4	18'-3	6	#4	18'-9	6	#4	19'-3	6	#4	19'-9	6	#4	20'-3	6	#4	20'-9
w	str	6	#4	13'-0	6	#4	13'-6	6	#4	13'-9	6	#4	14'-3	6	#4	14'-6	6	#4	15'-0	6	#4	15'-6	6	#4	16'-0	6	#4	16'-3	6	#4	16'-9

Pipe Diameter

	90"	96"	102"	108"	114"	120"	126"	132"	138"	144"
A	0'- 6	0'- 3	0'- 6	0'- 3	0'- 6	0'- 3	0'- 6	0'- 3	0'- 6	0'- 3
B	2'- 2	2'- 2	2'- 3	2'- 3	2'- 4	2'- 4	2'- 5	2'- 5	2'- 6	2'- 6
C	1'- 4	1'- 4	1'- 4	1'- 4	1'- 4	1'- 4	1'- 4	1'- 4	1'- 4	1'- 4
D	3'- 6	3'-10	4'- 1	4'- 5	4'- 8	5'- 0	5'- 3	5'- 7	5'-10	6'- 2
E	7'- 0	7'- 4	7'- 8	8'- 0	8'- 4	8'- 8	9'- 0	9'- 4	9'- 8	10'- 0
F	16'- 0	16'- 6	17'- 0	17'- 6	18'- 0	18'- 6	19'- 0	19'- 6	20'- 0	20'- 6
G	5'- 0 5/8	5'- 3 3/4	5'- 6 3/4	5'- 9 7/8	6'- 1	6'- 4 1/8	6'- 7 1/4	6'-10 3/8	7'- 1 3/8	7'- 4 1/2
H	9'- 6	10'- 0	10'- 6	11'- 0	11'- 6	12'- 0	12'- 6	13'- 0	13'- 6	14'- 0
J	2'- 6	2'- 9	3'- 0	3'- 3	3'- 6	3'- 9	4'- 0	4'- 3	4'- 6	4'- 9
K	20'- 0 1/2	20'- 8 1/2	21'- 4 1/8	22'- 0 1/8	22'- 7 3/4	23'- 3 3/4	24'- 0 3/8	24'- 8 1/2	25'- 4	26'- 0 1/8
L	8'- 1	8'- 6 1/4	8'-10 7/8	9'- 4 1/8	9'- 8 3/4	10'- 1 7/8	10'- 7 5/8	11'- 0 7/8	11'- 5 1/2	11'-10 5/8
M	4'- 5 1/4	4'- 8 3/8	4'-11	5'- 2 1/8	5'- 4 5/8	5'- 7 3/4	5'-11 3/8	6'- 2 1/2	6'- 5 1/8	6'- 8 1/4
N	0'- 3	0'- 6	0'- 3	0'- 6	0'- 3	0'- 6	0'- 3	0'- 6	0'- 3	0'- 6
P	10'- 4 3/4	10'-11 1/2	11'- 5 3/8	12'- 0 1/8	12'- 6	13'- 0 3/4	13'- 8 1/2	14'- 3 1/4	14'- 9 1/8	15'- 3 7/8
R	12'- 6	13'- 0	13'- 6	14'- 0	14'- 6	15'- 0	15'- 6	16'- 0	16'- 6	17'- 0
S	2'- 6	2'- 9	3'- 0	3'- 3	3'- 6	3'- 9	4'- 0	4'- 3	4'- 6	4'- 9
T	18'-10 1/8	19'- 7 3/4	20'- 4 1/2	21'- 2 1/4	21'-11	22'- 8 5/8	23'- 7 1/4	24'- 4 7/8	25'- 1 5/8	25'-11 1/4
V	3'-11 3/4	4'- 2 7/8	4'- 5	4'- 8 1/8	4'-10 3/8	5'- 1 1/2	5'- 5 1/2	5'- 8 5/8	5'-10 3/4	6'- 1 7/8
W	5'-11 3/8	6'- 2 1/2	6'- 5 5/8	6'- 8 3/4	6'-11 7/8	7'- 3	7'- 8	7'-11 1/8	8'- 2 1/4	8'- 5 3/8
X	5'- 5 3/8	5'- 8 1/2	5'-11 5/8	6'- 2 3/4	6'- 5 7/8	6'- 9	7'- 2 1/2	7'- 5 5/8	7'- 8 3/4	7'-11 7/8

QUANTITIES

PIPE DIA	REINF lbs	CONCRETE C.Y.
90"	1670	31.3
96"	1820	33.7
102"	1940	36.2
108"	2325	38.8
114"	2575	41.4
120"	2715	44.0
126"	3170	49.1
132"	3470	52.2
138"	3940	55.3
144"	4155	58.6

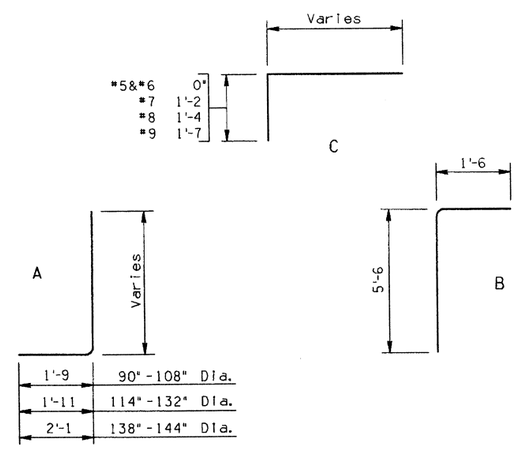

BENDS

NOTE:
Quantities and steel list shown are for one headwall.

DESIGN	K. W.	2-92	NO	DESCRIPTION OF REVISIONS	MADE BY	DATE
DRAWN	J. M.	4-92	1			
CHECKED	G. K.	4-92	2			
			3			
			4			

DESIGN APPROVED
APPROVED FOR DISTRIBUTION

ARIZONA
DEPARTMENT OF TRANSPORTATION
HIGHWAYS DIVISION
STANDARD DRAWINGS

OUTLET HEADWALLS
15° SKEW PIPE CULVERT
2:1 SLOPE

REVISION

STANDARD NO.
B-13.60

ZF1:(051020)SB1360.DGN;1 VIEW NAME:
08-MAY-1992 07:45

STEEL LIST

Mark	Bend	90" Dia.			96" Dia.			102" Dia.			108" Dia.			114" Dia.			120" Dia.			126" Dia.			132" Dia.			138" Dia.			144" Dia.		
		No	Size	Lgth	No	Size	Lgth	No	Size	Lgth	No	Size	Lgth	No	Size	Lgth	No	Size	Lgth	No	Size	Lgth	No	Size	Lgth	No	Size	Lgth	No	Size	Lgth
a1	A	4	#5	7'-9	4	#5	8'-0	5	#5	8'-3	5	#5	8'-6	5	#5	9'-0	5	#5	9'-3	5	#5	9'-6	5	#5	9'-9	6	#5	10'-3	6	#5	10'-6
a2	A	4	#5	8'-6	4	#5	8'-9	4	#5	9'-3	5	#5	9'-6	5	#5	10'-0	5	#5	10'-3	5	#5	10'-6	5	#5	10'-9	5	#5	11'-3	6	#5	11'-6
a3	A	4	#5	9'-6	4	#5	9'-9	4	#5	10'-3	4	#5	10'-6	5	#6	11'-0	5	#6	11'-3	5	#5	11'-6	5	#5	11'-9	5	#6	12'-6	5	#6	12'-9
a4	A	4	#5	10'-3	4	#5	10'-6	4	#5	11'-0	4	#6	11'-6	4	#6	12'-0	5	#7	12'-3	5	#6	12'-9	5	#6	13'-0	5	#7	13'-6	5	#7	14'-0
a5	A	4	#5	11'-3	4	#6	11'-6	4	#6	12'-0	4	#6	12'-6	4	#7	13'-0	4	#7	13'-3	5	#7	13'-9	5	#7	14'-0	5	#7	14'-6	5	#8	15'-3
a6	A	3	#6	12'-0	4	#6	12'-3	4	#6	13'-0	4	#7	13'-6	4	#7	14'-0	4	#7	14'-3	4	#7	15'-0	5	#8	15'-3	5	#8	15'-9	5	#8	16'-6
a7	A	4	#5	6'-9	4	#5	7'-0	4	#5	7'-3	4	#5	7'-6	5	#5	8'-0	5	#5	8'-3	5	#5	8'-6	5	#5	8'-9	5	#5	9'-3	5	#5	9'-6
a8	A	4	#5	7'-9	4	#5	8'-0	4	#5	8'-3	4	#5	8'-6	4	#5	9'-0	5	#5	9'-6	5	#5	9'-9	5	#5	10'-0	5	#5	10'-6	5	#5	10'-9
a9	A	4	#5	8'-9	4	#5	9'-3	4	#5	9'-6	4	#5	9'-9	4	#6	10'-3	4	#6	10'-6	5	#5	11'-0	5	#5	11'-3	5	#6	12'-0	5	#6	12'-3
a10	A	3	#5	10'-0	4	#5	10'-3	4	#5	10'-6	4	#6	11'-0	4	#6	11'-6	4	#7	11'-9	4	#6	12'-3	5	#6	12'-6	5	#7	13'-3	5	#7	13'-6
a11	A	3	#5	11'-0	3	#6	11'-3	4	#6	11'-9	4	#6	12'-0	4	#7	12'-6	4	#7	13'-0	4	#7	13'-6	4	#7	14'-0	5	#7	14'-6	5	#8	14'-9
a12	A	3	#6	12'-0	3	#6	12'-6	3	#6	13'-0	4	#7	13'-3	4	#7	13'-9	4	#7	14'-3	4	#7	14'-9	4	#8	15'-3	4	#8	16'-0	5	#8	16'-3
b1	str	2	#4	22'-3	2	#4	23'-6	2	#4	24'-6	2	#4	25'-6	2	#4	26'-6	2	#4	27'-6	2	#4	28'-6	2	#4	29'-6	2	#4	30'-6	2	#4	31'-9
b2	str	6	#4	22'-0	6	#4	23'-0	8	#4	24'-0	8	#4	25'-0	8	#4	26'-0	8	#4	27'-0	8	#4	28'-0	8	#4	29'-0	10	#4	30'-0	10	#4	31'-0
b3	str	2	#4	19'-9	2	#4	22'-6	2	#4	17'-6	2	#4	19'-0	2	#4	20'-0	2	#4	23'-0	2	#4	25'-6	2	#4	27'-6	2	#4	24'-0	2	#4	25'-0
b4	str	2	#4	12'-6	2	#4	15'-3	2	#4	10'-6	2	#4	12'-3	2	#4	13'-0	2	#4	15'-9	2	#4	18'-3	2	#4	20'-9	2	#4	16'-9	2	#4	18'-0
b5	str	2	#4	5'-3	2	#4	8'-0	2	#4	3'-9	2	#4	5'-9	2	#4	6'-0	2	#4	8'-6	2	#4	11'-3	2	#4	14'-3	2	#4	9'-3	2	#4	11'-3
b6	str																			2	#4	4'-0	2	#4	7'-6	2	#4	2'-0	2	#4	4'-3
b7	str	2	#4	20'-9	2	#4	21'-9	2	#4	22'-9	2	#4	23'-9	2	#4	24'-9	2	#4	25'-9	2	#4	26'-9	2	#4	28'-0	2	#4	29'-0	2	#4	30'-0
b8	str	6	#4	20'-0	6	#4	21'-0	6	#4	22'-0	6	#4	23'-0	6	#4	24'-0	8	#4	25'-0	8	#4	26'-0	8	#4	27'-0	8	#4	28'-0	8	#4	29'-0
b9	str	2	#4	14'-9	2	#4	17'-6	2	#4	18'-3	2	#4	20'-0	2	#4	22'-9	2	#4	18'-9	2	#4	19'-9	2	#4	22'-0	2	#4	23'-9	2	#4	26'-3
b10	str	2	#4	9'-6	2	#4	12'-0	2	#4	13'-0	2	#4	14'-9	2	#4	17'-0	2	#4	13'-3	2	#4	14'-3	2	#4	16'-3	2	#4	18'-3	2	#4	20'-3
b11	str	2	#4	4'-3	2	#4	6'-6	2	#4	17'-3	2	#4	9'-3	2	#4	11'-3	2	#4	7'-6	2	#4	9'-0	2	#4	10'-9	2	#4	12'-6	2	#4	14'-6
b12	str							2	#4	2'-0	2	#4	4'-0	2	#4	5'-9	2	#4	2'-0	2	#4	3'-6	2	#4	5'-0	2	#4	7'-0	2	#4	8'-9
c	str	5	#4	10'-6	5	#4	11'-0	5	#4	11'-6	5	#4	12'-0	5	#4	12'-6	5	#4	13'-0	5	#4	13'-6	5	#4	14'-0	5	#4	14'-6	5	#4	15'-0
d	A	6	#6	12'-3	6	#6	12'-9	6	#6	13'-3	6	#7	13'-9	6	#7	14'-6	6	#7	15'-0	6	#7	15'-6	6	#8	16'-0	6	#8	16'-6	6	#8	17'-0
e1	C	4	#5	3'-6	4	#5	3'-6	4	#5	3'-9	5	#5	4'-0	5	#5	4'-3	5	#5	4'-3	5	#5	4'-6	5	#5	4'-9	5	#5	4'-9	6	#5	5'-0
e2	C	4	#5	4'-0	4	#5	4'-0	4	#5	4'-3	4	#5	4'-6	5	#5	4'-9	5	#5	4'-9	5	#5	5'-0	5	#5	5'-3	5	#5	5'-6	5	#5	5'-9
e3	C	4	#5	4'-3	4	#5	4'-6	4	#5	4'-9	4	#5	5'-0	4	#5	5'-3	5	#5	5'-6	5	#5	5'-6	5	#5	6'-0	5	#6	6'-3	5	#6	6'-3
e4	C	4	#5	4'-9	4	#5	5'-0	4	#5	5'-3	4	#5	5'-6	4	#6	6'-0	4	#6	6'-0	5	#6	6'-3	5	#6	6'-6	5	#7	8'-0	5	#7	8'-3
e5	C	3	#5	5'-0	4	#5	5'-6	4	#5	5'-9	4	#6	6'-0	4	#7	7'-9	4	#7	7'-9	4	#7	8'-3	5	#7	8'-6	5	#7	8'-9	5	#7	9'-0
e6	C	3	#5	5'-6	3	#6	6'-0	4	#6	6'-3	4	#6	6'-6	4	#7	8'-3	4	#7	8'-6	4	#7	8'-9	4	#7	9'-3	5	#8	9'-9	5	#8	10'-0
e7	C	3	#5	6'-0	3	#6	6'-3	3	#6	6'-6	4	#6	7'-0	4	#7	8'-6	4	#7	8'-9	4	#7	9'-3	5	#7	9'-6	5	#8	10'-3	5	#8	10'-6
e8	C	9	#5	6'-0	9	#6	6'-3	10	#6	6'-6	10	#6	7'-0	11	#7	8'-6	11	#7	8'-9	12	#7	9'-3	12	#7	9'-6	13	#8	10'-3	13	#8	10'-6
e9	C	4	#5	6'-0	4	#6	6'-3	4	#6	6'-6	5	#6	7'-0	5	#7	8'-6	5	#7	8'-9	5	#7	9'-3	6	#7	9'-6	6	#8	10'-3	6	#8	10'-6
e10	C	3	#5	5'-6	3	#6	6'-0	3	#6	6'-3	3	#6	6'-6	4	#7	8'-3	4	#7	8'-6	4	#7	8'-9	4	#7	9'-3	4	#8	9'-9	4	#8	10'-0
e11	C	3	#5	5'-0	3	#5	5'-6	3	#5	5'-9	4	#6	6'-0	4	#7	7'-9	4	#7	7'-9	4	#7	8'-3	4	#7	8'-6	4	#7	8'-9	5	#7	9'-0
e12	C	3	#5	4'-9	3	#5	5'-0	4	#5	5'-3	4	#5	5'-6	4	#6	6'-0	4	#6	6'-0	4	#6	6'-3	4	#6	6'-6	5	#7	8'-0	5	#7	8'-3
e13	C	3	#5	4'-3	4	#5	4'-6	4	#5	4'-9	4	#5	5'-0	4	#5	5'-3	4	#5	5'-6	4	#5	5'-6	5	#5	6'-0	5	#6	6'-3	5	#6	6'-3
e14	C	4	#5	4'-0	4	#5	4'-0	4	#5	4'-3	4	#5	4'-6	4	#5	4'-9	4	#5	4'-9	5	#5	5'-0	5	#5	5'-3	5	#5	5'-6	5	#5	5'-9
e15	C	4	#5	3'-6	4	#5	3'-6	4	#5	3'-9	4	#5	4'-0	4	#5	4'-3	5	#5	4'-3	5	#5	4'-6	5	#5	4'-9	5	#5	4'-9	5	#5	5'-0
f1	str	4	#4	6'-0	4	#4	6'-6	4	#4	6'-9	5	#4	7'-0	5	#4	7'-0	5	#4	7'-6	5	#4	7'-9	5	#4	8'-0	5	#4	8'-0	6	#4	8'-3
f2	str	4	#4	7'-3	4	#4	7'-9	4	#4	8'-0	4	#4	8'-3	5	#4	8'-6	5	#4	9'-0	5	#4	9'-3	5	#4	9'-6	5	#4	9'-9	5	#4	10'-0
f3	str	4	#4	8'-6	4	#4	9'-0	4	#4	9'-3	4	#4	9'-9	4	#4	10'-3	4	#4	10'-6	5	#4	11'-0	5	#4	11'-3	5	#4	11'-6	5	#4	12'-0
f4	str	3	#4	10'-0	4	#4	10'-3	4	#4	10'-6	4	#4	11'-3	4	#4	11'-9	4	#4	12'-0	4	#4	12'-6	5	#4	12'-9	5	#4	13'-3	5	#4	13'-9
f5	str	4	#4	5'-3	4	#4	5'-6	4	#4	5'-9	4	#4	6'-0	4	#4	6'-3	5	#4	6'-6	5	#4	6'-9	5	#4	7'-0	5	#4	7'-3	5	#4	7'-6
f6	str	4	#4	6'-9	4	#4	7'-0	4	#4	7'-3	4	#4	7'-9	4	#4	8'-0	4	#4	8'-3	5	#4	8'-6	5	#4	8'-9	5	#4	9'-3	5	#4	9'-6
f7	str	3	#4	8'-6	3	#4	8'-9	4	#4	9'-0	4	#4	9'-3	4	#4	9'-6	4	#4	10'-3	4	#4	10'-6	4	#4	10'-9	5	#4	11'-0	5	#4	11'-3
f8	str	3	#4	10'-0	3	#4	10'-3	3	#4	10'-6	4	#4	11'-0	4	#4	11'-3	4	#4	12'-0	4	#4	12'-3	4	#4	12'-6	4	#4	13'-0	5	#4	13'-3
g	str	6	#4	9'-6	6	#4	10'-0	6	#4	10'-3	6	#4	10'-9	6	#4	11'-3	6	#4	11'-9	6	#4	12'-6	6	#4	13'-0	6	#4	13'-3	6	#4	13'-9
m1	str	4	#4	25'-6	4	#4	26'-9	4	#4	27'-9	5	#4	29'-0	5	#4	30'-0	5	#4	31'-3	5	#4	32'-6	6	#4	33'-6	6	#4	34'-9	6	#4	36'-0
m2	str	1	#4	25'-6	1	#4	26'-9	1	#4	27'-9	1	#4	29'-0	1	#4	30'-0	1	#4	31'-3	1	#4	32'-6	1	#4	33'-6	1	#4	34'-9	1	#4	36'-0
m3	str	4	#4	25'-6	4	#4	26'-9	4	#4	28'-0	5	#4	29'-3	5	#4	30'-6	5	#4	31'-9	5	#4	33'-3	6	#4	34'-6	6	#4	35'-9	6	#4	37'-0
m4	str	1	#4	25'-6	1	#4	26'-9	1	#4	28'-0	1	#4	29'-3	1	#4	30'-6	1	#4	31'-9	1	#4	33'-3	1	#4	34'-6	1	#4	35'-9	1	#4	37'-0
n1	str	4	#4	17'-0	4	#4	18'-0	4	#4	18'-9	5	#4	19'-9	5	#4	20'-9	5	#4	21'-9	5	#4	22'-9	6	#4	23'-9	6	#4	24'-9	6	#4	25'-9
n2	str	1	#4	17'-0	1	#4	18'-0	1	#4	18'-9	1	#4	19'-9	1	#4	20'-9	1	#4	21'-9	1	#4	22'-9	1	#4	23'-9	1	#4	24'-9	1	#4	25'-9
p	str	4	#5	11'-0	4	#5	11'-6	4	#5	12'-0	4	#5	12'-9	4	#5	13'-3	4	#5	13'-6	4	#5	14'-6	4	#5	15'-0	4	#5	15'-6	4	#5	16'-0
q	str	2	#6	13'-0	2	#6	13'-6	2	#6	14'-0	2	#6	14'-9	2	#6	15'-3	2	#6	15'-6	2	#6	16'-6	2	#6	17'-0	2	#6	17'-6	2	#6	18'-0
u	B	70	#4	7'-0	74	#4	7'-0	76	#4	7'-0	80	#4	7'-0	82	#4	7'-0	86	#4	7'-0	90	#4	7'-0	94	#4	7'-0	96	#4	7'-0	100	#4	7'-0
v	str	6	#4	22'-3	6	#4	23'-3	6	#4	24'-3	6	#4	25'-3	6	#4	26'-3	6	#4	27'-3	6	#4	28'-3	6	#4	29'-3	6	#4	30'-3	6	#4	31'-3
w	str	6	#4	20'-6	6	#4	21'-6	6	#4	22'-6	6	#4	23'-6	6	#4	24'-6	6	#4	25'-6	6	#4	26'-6	6	#4	27'-6	6	#4	28'-6	6	#4	29'-6

Pipe Diameter

	90"	96"	102"	108"	114"	120"	126"	132"	138"	144"
A	0'- 3	0'- 3	0'- 3	0'- 3	0'- 3	0'- 3	0'- 3	0'- 3	0'- 3	0'- 3
B	2'- 2	2'- 2	2'- 3	2'- 3	2'- 4	2'- 4	2'- 5	2'- 5	2'- 6	2'- 6
C	1'- 8	1'-10	1'-11	2'- 1	2'- 2	2'- 4	2'- 5	2'- 7	2'- 8	2'-10
D	2'- 6	2'- 8	2'-10	3'- 0	3'- 2	3'- 4	3'- 6	3'- 8	3'-10	4'- 0
E	6'- 4	6'- 8	7'- 0	7'- 4	7'- 8	8'- 0	8'- 4	8'- 8	9'- 0	9'- 4
F	22'- 0	23'- 0	24'- 0	25'- 0	26'- 0	27'- 0	28'- 0	29'- 0	30'- 0	31'- 0
G	5'- 0 5/8	5'- 3 3/4	5'- 6 3/4	5'- 9 7/8	6'- 1	6'- 4 1/8	6'- 7 1/4	6'-10 3/8	7'- 1 3/8	7'- 4 1/2
H	9'- 6	10'- 0	10'- 6	11'- 0	11'- 6	12'- 0	12'- 6	13'- 0	13'- 6	14'- 0
J	5'- 0	5'- 3	5'- 6	5'- 9	6'- 0	6'- 3	6'- 6	6'- 9	7'- 0	7'- 3
K	25'- 8 1/4	26'-10 3/8	27'-11 7/8	29'- 2	30'- 3 5/8	31'- 5 5/8	32'- 8 1/4	33'-10 3/8	34'-11 7/8	36'- 2
L	7'- 8 7/8	8'- 2	8'- 6 3/4	8'-11 7/8	9'- 4 5/8	9'- 9 3/4	10'- 3 1/2	10'- 8 5/8	11'- 1 3/8	11'- 6 1/2
M	4'- 5 1/4	4'- 8 3/8	4'-11	5'- 2 1/8	5'- 4 5/8	5'- 7 3/4	5'-11 3/8	6'- 2 1/2	6'- 5 1/8	6'- 8 1/4
N	0'- 3	0'- 3	0'- 3	0'- 3	0'- 3	0'- 3	0'- 3	0'- 3	0'- 3	0'- 3
P	9'- 9 3/8	10'- 4 1/8	10'-10	11'- 4 3/4	11'-10 5/8	12'- 5 3/8	13'- 1 1/8	13'- 7 7/8	14'- 1 3/4	14'- 8 1/2
R	20'- 0	21'- 0	22'- 0	23'- 0	24'- 0	25'- 0	26'- 0	27'- 0	28'- 0	29'- 0
S	4'- 0	4'- 3	4'- 6	4'- 9	5'- 0	5'- 3	5'- 6	5'- 9	6'- 0	6'- 3
T	25'- 8 7/8	27'- 0 1/2	28'- 3 1/4	29'- 6 7/8	30'- 9 5/8	32'- 1 1/4	33'- 5 7/8	34'- 9 1/2	36'- 0 1/4	37'- 4
V	3'-11 3/4	4'- 2 7/8	4'- 5	4'- 8 1/8	4'-10 3/8	5'- 1 1/2	5'- 5 1/2	5'- 8 5/8	5'-10 3/4	6'- 1 7/8
W	5'-11 3/8	6'- 2 1/2	6'- 5 5/8	6'- 8 3/4	6'-11 7/8	7'- 3	7'- 8	7'-11 1/8	8'- 2 1/4	8'- 5 3/8
X	5'- 5 3/8	5'- 8 1/2	5'-11 5/8	6'- 2 3/4	6'- 5 7/8	6'- 9	7'- 2 1/2	7'- 5 5/8	7'- 8 3/4	7'-11 7/8

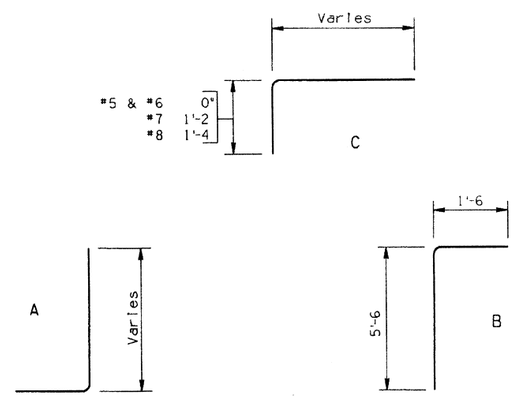

1'-9	90" - 108" Dia.
1'-11	114" - 132" Dia.
2'-1	138" - 144" Dia.

BENDS

QUANTITIES

PIPE Dia.	REINF Lbs.	CONCRETE C.Y.
90"	2220	40.6
96"	2485	44.1
102"	2665	47.7
108"	3080	51.7
114"	3620	55.6
120"	3865	59.8
126"	4025	67.5
132"	4510	72.3
138"	5240	77.1
144"	5605	82.2

NOTE:
Quantities and steel list shown are for one headwall.

DESIGN	K.W.	2-92
DRAWN	J.M. & C.H.	4-92
CHECKED	G.K.	4-92

NO	DESCRIPTION OF REVISIONS	MADE BY	DATE
1			
2			
3			
4			

Registered Professional Engineer (Civil) CERTIFICATE NO. 9910 F. DANIEL DAVIS DATE SIGNED 5-14-92 ARIZONA U.S.A.

DESIGN APPROVED

APPROVED FOR DISTRIBUTION

ARIZONA
DEPARTMENT OF TRANSPORTATION
HIGHWAYS DIVISION
STANDARD DRAWINGS

OUTLET HEADWALLS
15° SKEW PIPE CULVERT
4:1 SLOPE

REVISION

STANDARD NO.
B-13.70

ZFI:[050203]SB1370.DGN;2
08-MAY-1992 07:47
VIEW NAME: BR

STEEL LIST

Mark	Bend	90" Dia.			96" Dia.			102" Dia.			108" Dia.			114" Dia.			120" Dia.			126" Dia.			132" Dia.			138" Dia.			144" Dia.		
		No	Size	Lgth	No	Size	Lgth	No	Size	Lgth	No	Size	Lgth	No	Size	Lgth	No	Size	Lgth	No	Size	Lgth	No	Size	Lgth	No	Size	Lgth	No	Size	Lgth
a1	A	5	#5	8'-3	5	#5	8'-9	5	#5	9'-0	6	#5	9'-3	6	#5	9'-9	6	#5	10'-3	6	#5	10'-6	7	#5	10'-9	7	#5	11'-3	7	#5	11'-9
a2	A	5	#5	9'-0	5	#5	9'-6	5	#5	9'-9	6	#5	10'-0	6	#5	10'-6	6	#5	11'-0	6	#5	11'-3	7	#5	11'-6	7	#6	12'-3	7	#6	12'-9
a3	A	5	#5	9'-9	5	#5	10'-3	5	#5	10'-6	5	#5	11'-0	6	#6	11'-6	6	#6	12'-0	6	#6	12'-3	6	#6	12'-6	7	#6	13'-3	7	#7	13'-9
a4	A	4	#5	10'-6	5	#5	11'-0	5	#6	11'-3	5	#6	11'-9	5	#6	12'-3	6	#6	12'-9	6	#6	13'-0	6	#7	13'-6	6	#7	14'-0	7	#7	14'-6
a5	A	4	#5	11'-3	5	#6	11'-9	5	#6	12'-0	5	#7	12'-6	5	#7	13'-0	6	#7	13'-6	6	#7	13'-9	6	#7	14'-3	6	#7	15'-0	7	#8	15'-6
a6	A	4	#6	12'-0	4	#6	12'-6	5	#7	12'-9	5	#7	13'-6	5	#7	14'-0	5	#7	14'-6	6	#7	14'-9	6	#8	15'-3	6	#8	16'-0	6	#8	16'-6
a7	A	5	#5	8'-0	5	#5	8'-3	5	#5	8'-6	5	#5	8'-9	6	#5	9'-3	6	#5	9'-6	6	#5	9'-9	6	#5	10'-0	7	#5	10'-6	7	#5	10'-9
a8	A	4	#5	8'-9	5	#5	9'-0	5	#5	9'-3	5	#5	9'-6	5	#5	10'-0	6	#5	10'-6	6	#5	10'-9	6	#5	11'-0	6	#5	11'-6	7	#6	12'-0
a9	A	4	#5	9'-6	5	#5	10'-0	5	#5	10'-3	5	#5	10'-6	5	#5	11'-0	6	#6	11'-6	6	#6	11'-9	6	#6	12'-0	6	#6	12'-6	7	#6	13'-0
a10	A	4	#5	10'-3	4	#5	10'-9	5	#6	11'-3	5	#6	11'-6	5	#6	12'-0	5	#6	12'-3	6	#6	13'-0	6	#6	13'-3	6	#7	13'-9	6	#7	14'-3
a11	A	4	#5	11'-3	4	#6	11'-6	4	#6	12'-0	5	#7	12'-3	5	#7	12'-9	5	#7	13'-3	5	#7	14'-0	6	#7	14'-3	6	#7	14'-9	6	#7	15'-3
a12	A	4	#6	12'-0	4	#6	12'-6	4	#7	13'-0	5	#7	13'-3	5	#7	13'-9	5	#7	14'-3	5	#7	15'-0	6	#8	15'-3	6	#8	15'-9	6	#8	16'-6
b1	str	2	#4	26'-9	2	#4	28'-3	2	#4	29'-9	2	#4	31'-3	2	#4	32'-9	2	#4	34'-3	2	#4	35'-9	2	#4	37'-3	2	#4	38'-9	2	#4	40'-3
b2	str	8	#4	26'-6	8	#4	28'-0	8	#4	29'-6	8	#4	31'-0	8	#4	32'-6	10	#4	34'-0	10	#4	35'-6	10	#4	37'-0	10	#4	38'-6	12	#4	40'-0
b3	str	2	#4	16'-0	2	#4	20'-0	2	#4	22'-3	2	#4	25'-6	2	#4	30'-6	2	#4	23'-0	2	#4	27'-6	2	#4	30'-6	2	#4	35'-6	2	#4	29'-0
b4	str	2	#4	7'-0	2	#4	9'-6	2	#4	12'-6	2	#4	16'-3	2	#4	19'-9	2	#4	12'-9	2	#4	17'-3	2	#4	19'-9	2	#4	24'-9	2	#4	18'-3
b5	str							2	#4	3'-0	2	#4	7'-0	2	#4	9'-0	2	#4	2'-6	2	#4	7'-3	2	#4	9'-0	2	#4	14'-3	2	#4	7'-3
b6	str																									2	#4	3'-6			
b7	str	2	#4	24'-9	2	#4	26'-3	2	#4	27'-9	2	#4	29'-3	2	#4	30'-9	2	#4	32'-6	2	#4	34'-0	2	#4	35'-6	2	#4	37'-0	2	#4	38'-6
b8	str	6	#4	24'-6	8	#4	26'-0	8	#4	27'-6	8	#4	29'-0	8	#4	30'-6	8	#4	32'-0	8	#4	33'-6	10	#4	35'-0	10	#4	36'-6	10	#4	38'-0
b9	str	2	#4	23'-0	2	#4	16'-9	2	#4	20'-0	2	#4	23'-6	2	#4	26'-0	2	#4	29'-0	2	#4	31'-9	2	#4	27'-0	2	#4	29'-0	2	#4	33'-0
b10	str	2	#4	14'-0	2	#4	8'-3	2	#4	11'-3	2	#4	14'-6	2	#4	17'-3	2	#4	20'-3	2	#4	23'-0	2	#4	18'-3	2	#4	20'-3	2	#4	24'-3
b11	str	2	#4	5'-0				2	#4	2'-6	2	#4	5'-6	2	#4	8'-6	2	#4	11'-3	2	#4	14'-3	2	#4	9'-6	2	#4	11'-6	2	#4	15'-3
b12	str																2	#4	2'-6	2	#4	5'-6				2	#4	3'-0	2	#4	6'-6
c	str	5	#4	10'-6	5	#4	11'-0	5	#4	11'-6	5	#4	12'-0	5	#4	12'-6	5	#4	13'-0	5	#4	13'-6	5	#4	14'-0	5	#4	14'-6	5	#4	15'-0
d	A	6	#6	12'-3	6	#6	12'-9	6	#7	13'-3	6	#7	13'-9	6	#7	14'-6	6	#7	15'-0	6	#7	15'-6	6	#8	16'-0	6	#8	16'-6	6	#8	17'-0
e1	C	5	#5	4'-0	5	#5	4'-3	5	#5	4'-3	6	#5	4'-6	6	#5	4'-9	6	#5	4'-9	6	#5	5'-0	7	#5	5'-3	7	#5	5'-3	7	#5	5'-6
e2	C	5	#5	4'-3	5	#5	4'-6	5	#5	4'-6	5	#5	4'-9	6	#5	5'-0	6	#5	5'-3	6	#5	5'-6	6	#5	5'-9	7	#5	6'-0	7	#6	6'-0
e3	C	5	#5	4'-6	5	#5	4'-9	5	#5	5'-0	5	#5	5'-3	6	#5	5'-6	6	#5	5'-6	6	#5	5'-9	6	#6	6'-3	7	#6	6'-6	7	#6	6'-9
e4	C	4	#5	4'-9	5	#5	5'-0	5	#5	5'-3	5	#5	5'-6	5	#5	5'-9	6	#6	6'-0	6	#6	6'-3	6	#6	6'-9	6	#7	7'-9	7	#7	8'-3
e5	C	4	#5	5'-0	4	#5	5'-3	5	#5	5'-9	5	#5	6'-0	5	#6	6'-3	5	#6	6'-6	6	#6	6'-9	6	#7	8'-0	6	#7	8'-3	6	#7	8'-9
e6	C	4	#5	5'-3	4	#5	5'-6	5	#5	6'-0	5	#6	6'-3	5	#6	6'-6	5	#7	7'-9	6	#7	8'-0	6	#7	8'-6	6	#7	8'-9	6	#8	9'-6
e7	C	3	#5	5'-3	3	#5	5'-6	3	#5	6'-0	3	#6	6'-3	3	#6	6'-6	3	#7	7'-9	3	#7	8'-3	3	#7	8'-9	3	#7	9'-0	3	#8	9'-6
e8	C	9	#5	5'-3	9	#5	5'-6	10	#5	6'-0	10	#6	6'-3	11	#6	6'-6	11	#7	7'-9	12	#7	8'-3	12	#7	8'-9	13	#7	9'-0	13	#8	9'-6
e9	C	4	#5	5'-3	4	#5	5'-6	4	#5	6'-0	5	#6	6'-3	5	#6	6'-6	5	#7	7'-9	5	#7	8'-3	6	#7	8'-9	6	#7	9'-0	6	#8	9'-6
e10	C	4	#5	5'-3	4	#5	5'-6	4	#5	6'-0	4	#6	6'-3	5	#6	6'-6	5	#7	7'-9	5	#7	8'-0	5	#7	8'-6	6	#7	8'-9	6	#8	9'-6
e11	C	4	#5	5'-0	4	#5	5'-3	4	#5	5'-9	5	#5	6'-0	5	#6	6'-3	5	#6	6'-6	5	#6	6'-9	6	#7	8'-0	6	#7	8'-3	6	#7	8'-9
e12	C	4	#5	4'-9	4	#5	5'-0	5	#5	5'-3	5	#5	5'-6	5	#5	5'-9	5	#6	6'-0	6	#6	6'-3	6	#6	6'-9	6	#7	7'-9	6	#7	8'-3
e13	C	4	#5	4'-6	4	#5	4'-9	5	#5	5'-0	5	#5	5'-3	5	#5	5'-6	5	#5	5'-6	6	#5	5'-9	6	#6	6'-3	6	#6	6'-6	6	#6	6'-9
e14	C	4	#5	4'-3	5	#5	4'-6	5	#5	4'-6	5	#5	4'-9	5	#5	5'-0	6	#5	5'-3	6	#5	5'-6	6	#5	5'-9	6	#5	6'-0	7	#6	6'-0
e15	C	5	#5	4'-0	5	#5	4'-3	5	#5	4'-3	5	#5	4'-6	6	#5	4'-9	6	#5	4'-9	6	#5	5'-0	6	#5	5'-3	7	#5	5'-3	7	#5	5'-6
f1	str	5	#4	6'-6	5	#4	6'-9	5	#4	7'-3	6	#4	7'-6	6	#4	7'-9	6	#4	8'-3	6	#4	8'-6	7	#4	8'-9	7	#4	9'-3	7	#4	9'-6
f2	str	5	#4	7'-9	5	#4	8'-0	5	#4	8'-6	5	#4	8'-9	6	#4	9'-0	6	#4	9'-6	6	#4	10'-0	6	#4	10'-3	7	#4	10'-6	7	#4	11'-0
f3	str	4	#4	8'-9	5	#4	9'-3	5	#4	9'-6	5	#4	10'-0	5	#4	10'-6	6	#4	11'-0	6	#4	11'-3	6	#4	11'-6	6	#4	12'-0	7	#4	12'-6
f4	str	4	#4	10'-0	4	#4	10'-6	5	#4	10'-9	5	#4	11'-3	5	#4	11'-9	5	#4	12'-3	6	#4	12'-9	6	#4	13'-0	6	#4	13'-6	6	#4	14'-0
f5	str	5	#4	6'-3	5	#4	6'-6	5	#4	6'-9	5	#4	7'-0	6	#4	7'-3	6	#4	7'-6	6	#4	7'-9	6	#4	8'-0	7	#4	8'-3	7	#4	8'-6
f6	str	4	#4	7'-6	5	#4	7'-9	5	#4	8'-0	5	#4	8'-3	5	#4	8'-9	6	#4	9'-0	6	#4	9'-3	6	#4	9'-6	6	#4	10'-0	7	#4	10'-3
f7	str	4	#4	8'-6	4	#4	9'-0	5	#4	9'-3	5	#4	9'-6	5	#4	10'-0	5	#4	10'-6	6	#4	10'-9	6	#4	11'-3	6	#4	11'-6	6	#4	12'-0
f8	str	4	#4	9'-9	4	#4	10'-3	4	#4	10'-6	5	#4	11'-0	5	#4	11'-6	5	#4	12'-0	5	#4	12'-6	6	#4	12'-9	6	#4	13'-3	6	#4	13'-9
g	str	6	#4	9'-6	6	#4	10'-0	6	#4	10'-3	6	#4	10'-9	6	#4	11'-3	6	#4	11'-9	6	#4	12'-6	6	#4	13'-0	6	#4	13'-3	6	#4	13'-9
m1	str	4	#4	29'-6	4	#4	31'-3	4	#4	32'-9	4	#4	34'-6	5	#4	36'-3	5	#4	37'-9	5	#4	39'-6	6	#4	41'-3	6	#4	42'-9	6	#4	44'-6
m2	str	1	#4	29'-6	1	#4	31'-3	1	#4	32'-9	1	#4	34'-6	1	#4	36'-3	1	#4	37'-9	1	#4	39'-6	1	#4	41'-3	1	#4	42'-9	1	#4	44'-6
m3	str	4	#4	29'-3	4	#4	31'-0	4	#4	32'-9	4	#4	34'-6	5	#4	36'-3	5	#4	38'-3	5	#4	40'-0	6	#4	41'-9	6	#4	43'-9	6	#4	45'-6
m4	str	1	#4	29'-3	1	#4	31'-0	1	#4	32'-9	1	#4	34'-6	1	#4	36'-3	1	#4	38'-3	1	#4	40'-0	1	#4	41'-9	1	#4	43'-9	1	#4	45'-6
n1	str	4	#4	16'-3	4	#4	17'-3	4	#4	18'-0	5	#4	19'-0	5	#4	20'-0	5	#4	21'-0	5	#4	22'-0	6	#4	23'-0	6	#4	24'-0	6	#4	25'-0
n2	str	1	#4	16'-3	1	#4	17'-3	1	#4	18'-0	1	#4	19'-0	1	#4	20'-0	1	#4	21'-0	1	#4	22'-0	1	#4	23'-0	1	#4	24'-0	1	#4	25'-0
p	str	4	#5	11'-0	4	#5	11'-6	4	#5	12'-0	4	#5	12'-9	4	#5	13'-3	4	#5	13'-6	4	#5	14'-6	4	#5	15'-0	4	#5	15'-6	4	#5	16'-0
q	str	2	#6	13'-0	2	#6	13'-6	2	#6	14'-0	2	#6	14'-9	2	#6	15'-3	2	#6	15'-6	2	#6	16'-6	2	#6	17'-0	2	#6	17'-6	2	#6	18'-0
u	B	82	#4	7'-0	86	#4	7'-0	90	#4	7'-0	96	#4	7'-0	100	#4	7'-0	104	#4	7'-0	108	#4	7'-0	114	#4	7'-0	118	#4	7'-0	122	#4	7'-0
v	str	6	#4	27'-0	6	#4	28'-6	6	#4	29'-9	6	#4	31'-6	6	#4	32'-9	6	#4	34'-3	6	#4	35'-9	6	#4	37'-0	6	#4	38'-6	6	#4	40'-0
w	str	6	#4	25'-0	6	#4	26'-6	6	#4	27'-9	6	#4	29'-6	6	#4	30'-9	6	#4	32'-3	6	#4	33'-9	6	#4	35'-0	6	#4	36'-6	6	#4	38'-0

Pipe Diameter

	90"	96"	102"	108"	114"	120"	126"	132"	138"	144"
A	0'- 6	0'- 3	0'- 6	0'- 3	0'- 6	0'- 3	0'- 6	0'- 3	0'- 6	0'- 3
B	2'- 2	2'- 2	2'- 3	2'- 3	2'- 4	2'- 4	2'- 5	2'- 5	2'- 6	2'- 6
C	2'- 2	2'- 4	2'- 5	2'- 7	2'- 8	2'-10	2'-11	3'- 1	3'- 2	3'- 4
D	1'- 4	1'- 6	1'- 8	1'-10	2'- 0	2'- 2	2'- 4	2'- 6	2'- 8	2'-10
E	5'- 8	6'- 0	6'- 4	6'- 8	7'- 0	7'- 4	7'- 8	8'- 0	8'- 4	8'- 8
F	26'- 6	28'- 0	29'- 6	31'- 0	32'- 6	34'- 0	35'- 6	37'- 0	38'- 6	40'- 0
G	5'-0 5/8	5'- 3 3/4	5'- 6 3/4	5'- 9 7/8	6'- 1	6'- 4 1/8	6'- 7 1/4	6'-10 3/8	7'- 1 3/8	7'- 4 1/2
H	9'- 6	10'- 0	10'- 6	11'- 0	11'- 6	12'- 0	12'- 6	13'- 0	13'- 6	14'- 0
J	5'- 6	5'-10	6'- 2	6'- 6	6'-10	7'- 2	7'- 6	7'-10	8'- 2	8'- 6
K	29'-10 1/8	31'- 6 1/4	33'- 1 3/4	34'- 9 7/8	36'- 5 3/8	38'- 1 1/2	39'-10 1/8	41'- 6 1/8	43'- 1 3/4	44'- 9 3/4
L	7'- 4 3/4	7'- 9 7/8	8'- 2 1/2	8'- 7 3/4	9'- 0 3/8	9'- 5 5/8	9'-11 1/4	10'- 4 1/2	10'- 9 1/8	11'- 2 3/8
M	4'- 5 1/4	4'- 8 3/8	4'-11	5'- 2 1/8	5'- 4 5/8	5'- 7 3/4	5'-11 3/8	6'- 2 1/2	6'- 5 1/8	6'- 8 1/4
N	0'- 6	0'- 3	0'- 6	0'- 3	0'- 6	0'- 3	0'- 6	0'- 3	0'- 6	0'- 3
P	9'- 2 1/8	9'- 8 7/8	10'- 2 3/4	10'- 9 1/2	11'- 3 3/8	11'-10 1/8	12'- 5 3/4	13'- 0 1/2	13'- 6 3/8	14'- 1 1/8
R	24'- 6	26'- 0	27'- 6	29'- 0	30'- 6	32'- 0	33'- 6	35'- 0	36'- 6	38'- 0
S	5'- 3	5'- 6	5'- 9	6'- 0	6'- 3	6'- 6	6'- 9	7'- 0	7'- 3	7'- 6
T	29'- 7 1/2	31'- 5 1/8	33'- 1 7/8	34'-11 1/2	36'- 8 1/4	38'- 6	40'- 4 1/2	42'- 2 1/4	43'-11	45'- 8 5/8
V	3'-11 3/4	4'- 2 7/8	4'- 5	4'- 8 1/8	4'-10 3/8	5'- 1 1/2	5'- 5 1/2	5'- 8 5/8	5'-10 3/4	6'- 1 7/8
W	5'-11 3/8	6'- 2 1/2	6'- 5 5/8	6'- 8 3/4	6'-11 7/8	7'- 3	7'- 8	7'-11 1/8	8'- 2 1/4	8'- 5 3/8
X	5'- 5 3/8	5'- 8 1/2	5'-11 5/8	6'- 2 3/4	6'- 5 7/8	6'- 9	7'- 2 1/2	7'- 5 5/8	7'- 8 3/4	7'-11 7/8

QUANTITIES

PIPE Dia.	REINF Lbs.	CONCRETE C.Y.
90"	2610	46.4
96"	2875	51.0
102"	3250	56.5
108"	3680	60.7
114"	4045	65.7
120"	4555	71.2
126"	4895	81.3
132"	5860	87.4
138"	6140	93.8
144"	6960	100.5

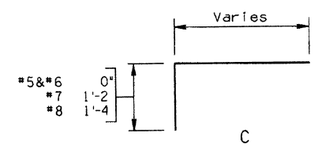

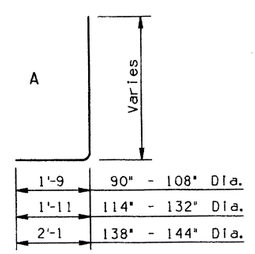

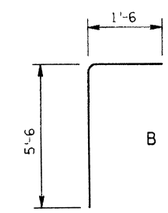

BENDS

NOTE:
Quantities and steel list shown are for one headwall.

DESIGN	K.W.	2-92
DRAWN	J.M. & C.H.	4-92
CHECKED	G.K.	4-92

NO	DESCRIPTION OF REVISIONS	MADE BY	DATE
1			
2			
3			
4			

DESIGN APPROVED

APPROVED FOR DISTRIBUTION

ARIZONA
DEPARTMENT OF TRANSPORTATION
HIGHWAYS DIVISION
STANDARD DRAWINGS

OUTLET HEADWALLS
15° SKEW PIPE CULVERT
6:1 SLOPE

REVISION

STANDARD NO.
B-13.80

ZF1:(0510203SB1380.DGN;3 VIEW NAME:
08-MAY-1992 07:49

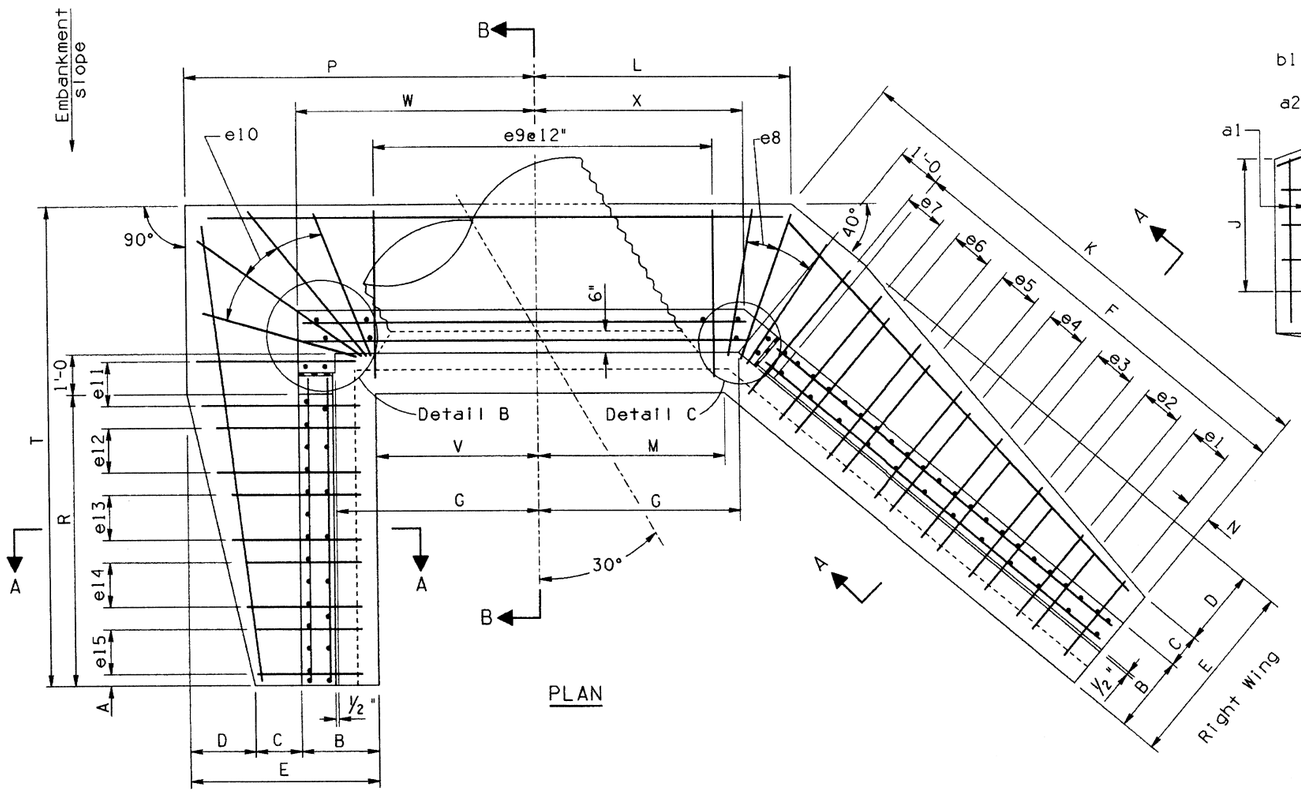

PLAN

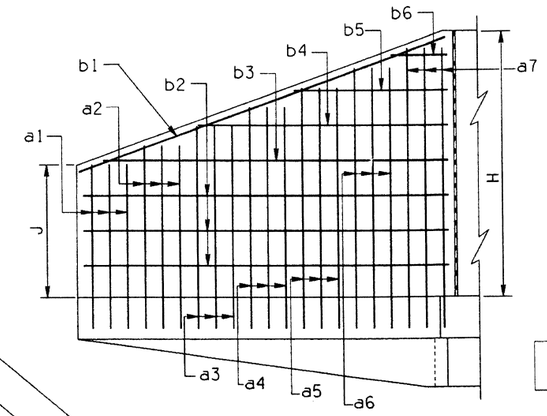

RIGHT WING ELEVATION

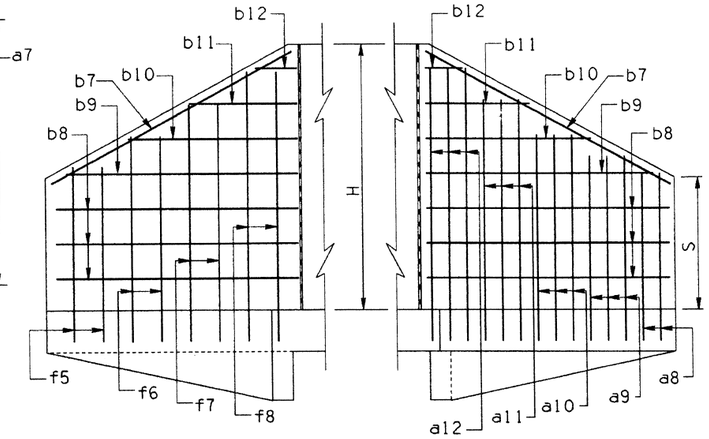

LEFT WING ELEVATION

NOTE:

See B-11.10 for Detail B and Detail C.

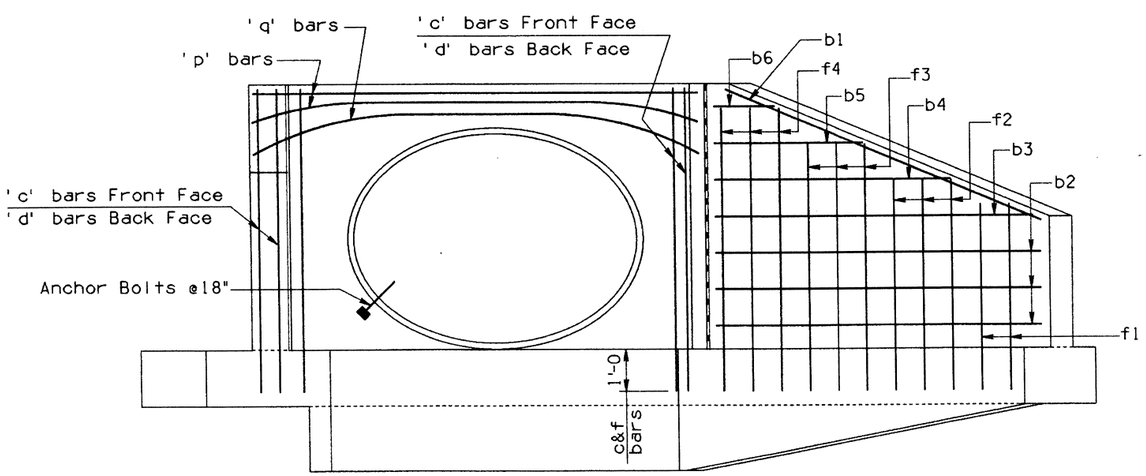

ELEVATION

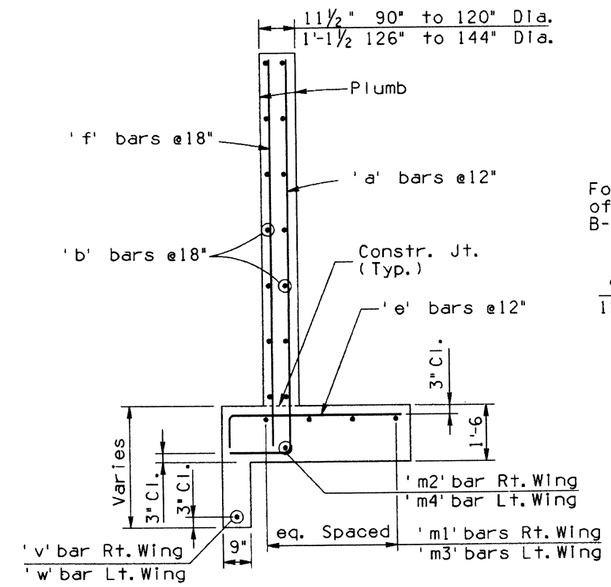

SECTION A-A

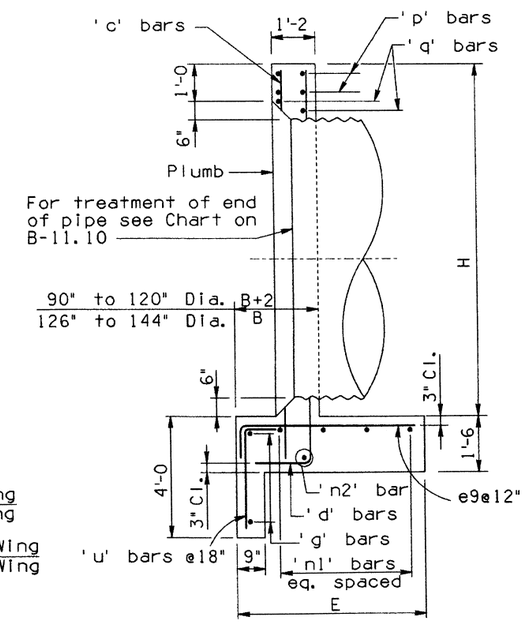

SECTION B-B

NOTES:

For General Notes and Misc. Details see B-11.10. For steel list and bend diagrams see B-14.20, B-14.30 or B-14.40.

DESIGN	K.W.	4-92	NO	DESCRIPTION OF REVISIONS	MADE BY	DATE
DRAWN	J.M.	4-92	1			
CHECKED	G.K.	4-92	2			
			3			
			4			

Registered Professional Engineer (Civil) Certificate No. 9910 F. DANIEL DAVIS Date Signed 5-15-92 Arizona U.S.A.	DESIGN APPROVED F. Daniel Davis	ARIZONA DEPARTMENT OF TRANSPORTATION HIGHWAYS DIVISION STANDARD DRAWINGS	REVISION 4-92
	APPROVED FOR DISTRIBUTION	INLET HEADWALLS 30° SKEW PIPE CULVERT	STANDARD NO. B-14.10

ZFL(051020)SB1410.DGN;3 VIEW NAME:
08-MAY-1992 07:51

STEEL LIST

Mark	Bend	90" Dia. No	Size	Lgth	96" Dia. No	Size	Lgth	102" Dia. No	Size	Lgth	108" Dia. No	Size	Lgth	114" Dia. No	Size	Lgth	120" Dia. No	Size	Lgth	126" Dia. No	Size	Lgth	132" Dia. No	Size	Lgth	138" Dia. No	Size	Lgth	144" Dia. No	Size	Lgth
a1	A	3	#5	6'-6	3	#5	6'-9	3	#5	6'-9	3	#5	7'-0	3	#5	7'-3	4	#5	7'-6	4	#5	7'-9	4	#5	8'-0	4	#5	8'-3	4	#5	8'-3
a2	A	3	#5	7'-6	3	#5	7'-9	3	#5	8'-0	3	#5	8'-0	3	#5	8'-6	3	#5	9'-0	4	#5	9'-3	4	#5	9'-3	4	#5	9'-6	4	#5	10'-0
a3	A	3	#5	8'-9	3	#5	9'-0	3	#5	9'-0	3	#5	9'-3	3	#5	9'-6	3	#5	10'-3	3	#5	10'-6	4	#5	10'-9	4	#5	11'-0	4	#5	11'-3
a4	A	3	#5	9'-9	3	#5	10'-0	3	#5	10'-0	3	#5	10'-3	3	#5	10'-9	3	#5	11'-3	3	#5	11'-9	3	#6	12'-0	4	#6	12'-3	4	#6	12'-9
a5	A	3	#5	11'-0	3	#5	11'-3	3	#6	11'-0	3	#6	11'-6	3	#6	11'-9	3	#6	12'-6	3	#6	12'-9	3	#7	13'-6	3	#7	13'-9	4	#7	14'-3
a6	A	2	#6	12'-0	3	#6	12'-3	2	#6	12'-0	3	#6	12'-6	3	#7	13'-0	3	#7	13'-6	3	#7	13'-9	3	#7	14'-3	3	#7	15'-0	3	#7	15'-9
a7	A							2	#7	13'-3	2	#7	13'-9	3	#7	14'-0	3	#7	14'-6	3	#7	15'-0	3	#8	15'-6	3	#8	16'-0	3	#8	16'-6
a8	A	3	#5	6'-0	3	#5	6'-3	3	#5	6'-6	3	#5	6'-9	3	#5	7'-0	3	#5	7'-3	3	#5	7'-6	3	#5	8'-0	4	#5	8'-3	4	#5	8'-6
a9	A	3	#5	7'-9	3	#5	8'-3	3	#5	8'-6	3	#5	8'-9	3	#5	8'-9	3	#5	9'-0	3	#5	9'-3	3	#5	9'-9	3	#5	10'-3	3	#5	10'-9
a10	A	3	#5	9'-6	3	#5	10'-0	3	#5	10'-3	3	#5	10'-6	3	#5	10'-6	3	#5	11'-0	3	#5	11'-0	3	#6	11'-6	3	#6	12'-0	3	#6	12'-6
a11	A	3	#6	11'-3	3	#6	11'-9	2	#6	11'-9	2	#6	12'-3	3	#6	12'-3	3	#6	12'-6	3	#6	12'-9	3	#7	13'-6	3	#7	14'-0	3	#7	14'-6
a12	A							2	#7	13'-0	2	#7	13'-3	2	#7	13'-9	2	#7	14'-3	3	#7	14'-6	3	#8	15'-0	3	#8	15'-6	3	#8	16'-0
b1	str	2	#4	16'-6	2	#4	17'-6	2	#4	18'-6	2	#4	19'-6	2	#4	20'-9	2	#4	21'-9	2	#4	22'-9	2	#4	24'-0	2	#4	25'-0	2	#4	26'-0
b2	str	4	#4	16'-0	4	#4	17'-0	6	#4	18'-0	6	#4	19'-0	6	#4	20'-0	6	#4	21'-0	6	#4	22'-0	6	#4	23'-0	6	#4	24'-0	8	#4	25'-0
b3	str	2	#4	15'-6	2	#4	16'-3	2	#4	13'-6	2	#4	15'-0	2	#4	16'-6	2	#4	18'-0	2	#4	19'-9	2	#4	20'-9	2	#4	22'-6	2	#4	19'-6
b4	str	2	#4	11'-6	2	#4	12'-0	2	#4	9'-6	2	#4	10'-9	2	#4	12'-3	2	#4	13'-9	2	#4	15'-3	2	#4	16'-6	2	#4	18'-3	2	#4	15'-3
b5	str	2	#4	7'-6	2	#4	8'-0	2	#4	5'-6	2	#4	6'-9	2	#4	7'-9	2	#4	9'-6	2	#4	11'-0	2	#4	12'-3	2	#4	13'-9	2	#4	11'-3
b6	str	2	#4	3'-6	2	#4	4'-0	2	#4	1'-6	2	#4	2'-6	2	#4	3'-6	2	#4	5'-3	2	#4	6'-9	2	#4	8'-0	2	#4	9'-6	2	#4	7'-0
b7	str	2	#4	12'-3	2	#4	12'-9	2	#4	13'-3	2	#4	14'-0	2	#4	14'-6	2	#4	15'-0	2	#4	15'-6	2	#4	16'-0	2	#4	16'-9	2	#4	17'-3
b8	str	4	#4	11'-0	4	#4	11'-6	4	#4	12'-0	6	#4	12'-6	6	#4	13'-0	6	#4	13'-6	6	#4	14'-0	6	#4	14'-6	6	#4	15'-0	8	#4	15'-6
b9	str	2	#4	9'-6	2	#4	10'-6	2	#4	11'-6	2	#4	9'-6	2	#4	10'-6	2	#4	11'-6	2	#4	12'-3	2	#4	13'-3	2	#4	14'-0	2	#4	12'-6
b10	str	2	#4	7'-0	2	#4	7'-9	2	#4	8'-9	2	#4	7'-0	2	#4	7'-9	2	#4	8'-9	2	#4	9'-6	2	#4	10'-6	2	#4	11'-3	2	#4	9'-9
b11	str	2	#4	4'-3	2	#4	5'-3	2	#4	6'-3	2	#4	4'-6	2	#4	5'-3	2	#4	6'-3	2	#4	7'-0	2	#4	8'-0	2	#4	8'-9	2	#4	7'-0
b12	str	2	#4	1'-9	2	#4	2'-6	2	#4	3'-6	2	#4	1'-9	2	#4	2'-6	2	#4	3'-6	2	#4	4'-3	2	#4	5'-3	2	#4	6'-0	2	#4	4'-3
c	str	5	#4	10'-6	5	#4	11'-0	5	#4	11'-6	5	#4	12'-0	5	#4	12'-6	5	#4	13'-0	5	#4	13'-6	5	#4	14'-0	5	#4	14'-6	5	#4	15'-0
d	A	6	#6	12'-3	6	#6	12'-9	6	#6	13'-3	6	#7	13'-9	6	#7	14'-6	6	#7	15'-0	6	#7	15'-6	6	#8	16'-0	6	#8	16'-6	6	#8	17'-0
e1	C	3	#5	3'-3	3	#5	3'-3	3	#5	3'-3	3	#5	3'-3	3	#5	3'-6	3	#5	3'-6	4	#5	3'-6	4	#5	3'-9	4	#5	3'-9	4	#5	3'-9
e2	C	3	#5	3'-9	3	#5	3'-9	3	#5	4'-0	3	#5	3'-9	3	#5	4'-3	3	#5	4'-3	3	#5	4'-3	4	#5	4'-6	4	#5	4'-6	4	#5	4'-6
e3	C	3	#5	4'-3	3	#5	4'-6	3	#5	4'-6	3	#5	4'-6	3	#5	4'-9	3	#5	4'-9	3	#5	5'-0	3	#6	5'-3	4	#6	5'-3	4	#6	5'-6
e4	C	3	#5	5'-0	3	#5	5'-0	3	#5	5'-3	3	#5	5'-0	3	#5	5'-6	3	#5	5'-6	3	#5	5'-9	3	#6	6'-0	3	#7	7'-3	4	#7	7'-6
e5	C	2	#5	5'-6	3	#5	5'-6	3	#6	5'-9	3	#6	5'-6	3	#6	6'-0	3	#6	6'-3	3	#6	6'-6	3	#7	8'-0	3	#7	8'-0	3	#7	8'-6
e6	C	2	#6	6'-0	2	#6	6'-3	3	#7	7'-9	2	#7	7'-6	3	#7	7'-6	3	#7	7'-9	3	#7	8'-0	3	#7	8'-6	3	#7	8'-6	3	#8	9'-3
e7	C										2	#7	8'-3	2	#7	8'-3	3	#8	8'-6	3	#8	9'-3	3	#8	9'-6	3	#8	10'-0	3	#8	10'-3
e8	C	2	#6	6'-3	2	#6	6'-6	2	#7	8'-0	2	#7	8'-3	2	#7	8'-6	3	#8	9'-0	3	#8	9'-6	3	#8	9'-9	3	#8	10'-3	3	#8	10'-6
e9	C	10	#6	6'-3	10	#6	6'-6	11	#7	8'-0	11	#7	8'-3	12	#7	8'-6	12	#8	9'-0	13	#8	9'-6	13	#8	9'-9	14	#8	10'-3	14	#8	10'-6
e10	C	5	#6	6'-3	5	#6	6'-6	5	#7	8'-0	6	#7	8'-3	6	#7	8'-6	6	#8	9'-0	6	#8	9'-6	7	#8	9'-9	7	#8	10'-3	7	#8	10'-6
e11	C	2	#6	6'-0	3	#6	6'-3	3	#7	7'-9	2	#7	8'-0	2	#7	8'-0	2	#7	8'-6	2	#8	9'-3	3	#8	9'-6	3	#8	10'-0	3	#8	10'-3
e12	C	3	#5	5'-0	3	#5	5'-3	3	#6	5'-6	2	#6	6'-0	2	#6	6'-3	3	#6	6'-6	3	#7	7'-6	3	#7	7'-9	3	#7	8'-3	3	#7	8'-6
e13	C	3	#5	4'-0	3	#5	4'-3	3	#5	4'-3	3	#5	5'-3	3	#5	5'-6	3	#5	5'-6	3	#6	5'-9	3	#6	5'-9	3	#6	6'-0	3	#6	6'-3
e14	C	3	#5	3'-3	3	#5	3'-3	3	#5	3'-3	3	#5	4'-3	3	#5	4'-6	3	#5	4'-6	3	#5	4'-6	3	#5	4'-9	3	#5	4'-9	3	#5	5'-0
e15	C										3	#5	3'-3	3	#5	3'-6	3	#5	3'-6	3	#5	3'-6	3	#5	3'-6	3	#5	3'-9	4	#5	3'-9
f1	str	3	#4	4'-9	3	#4	4'-9	3	#4	5'-0	4	#4	5'-3	4	#4	5'-3	4	#4	5'-6	4	#4	5'-9	4	#4	5'-9	4	#4	6'-0	5	#4	6'-3
f2	str	3	#4	6'-6	3	#4	6'-6	3	#4	6'-9	3	#4	7'-3	4	#4	7'-3	4	#4	7'-9	4	#4	8'-0	4	#4	8'-0	4	#4	8'-3	4	#4	8'-9
f3	str	3	#4	8'-0	3	#4	8'-3	3	#4	8'-6	3	#4	9'-0	3	#4	9'-6	3	#4	9'-9	4	#4	10'-0	4	#4	10'-3	4	#4	10'-9	4	#4	11'-0
f4	str	2	#4	9'-9	3	#4	10'-0	3	#4	10'-3	3	#4	11'-0	3	#4	11'-6	3	#4	12'-0	3	#4	12'-3	4	#4	12'-6	4	#4	13'-0	4	#4	13'-6
f5	str	2	#4	4'-0	2	#4	4'-3	2	#4	4'-6	3	#4	4'-9	3	#4	5'-0	3	#4	5'-3	3	#4	5'-6	3	#4	5'-9	3	#4	6'-0	3	#4	6'-3
f6	str	2	#4	5'-9	2	#4	6'-3	2	#4	6'-6	2	#4	6'-9	2	#4	7'-3	2	#4	7'-6	3	#4	7'-9	3	#4	8'-3	3	#4	8'-6	3	#4	8'-9
f7	str	2	#4	7'-9	2	#4	8'-0	2	#4	8'-6	2	#4	9'-0	2	#4	9'-3	2	#4	9'-9	2	#4	10'-3	2	#4	10'-6	2	#4	11'-0	3	#4	11'-6
f8	str	2	#4	9'-6	2	#4	10'-0	2	#4	10'-6	2	#4	11'-0	2	#4	11'-6	2	#4	12'-0	2	#4	12'-6	2	#4	13'-0	2	#4	13'-6	2	#4	14'-0
g	str	2	#4	10'-0	2	#4	10'-6	2	#4	11'-0	2	#4	11'-6	2	#4	12'-0	2	#4	12'-6	2	#4	13'-0	2	#4	13'-6	2	#4	14'-0	2	#4	14'-6
m1	str	4	#4	18'-9	4	#4	19'-9	4	#4	21'-0	5	#4	22'-0	5	#4	23'-0	5	#4	24'-3	5	#4	25'-3	6	#4	26'-6	6	#4	27'-6	6	#4	28'-9
m2	str	1	#4	18'-9	1	#4	19'-9	1	#4	21'-0	1	#4	22'-0	1	#4	23'-0	1	#4	24'-3	1	#4	25'-3	1	#4	26'-6	1	#4	27'-6	1	#4	28'-9
m3	str	4	#4	17'-0	4	#4	17'-9	4	#4	18'-6	5	#4	19'-6	5	#4	20'-3	5	#4	21'-0	5	#4	22'-0	6	#4	22'-9	6	#4	23'-6	6	#4	24'-6
m4	str	1	#4	17'-0	1	#4	17'-9	1	#4	18'-6	1	#4	19'-6	1	#4	20'-3	1	#4	21'-0	1	#4	22'-0	1	#4	22'-9	1	#4	23'-9	1	#4	24'-6
n1	str	4	#4	18'-0	4	#4	19'-0	4	#4	20'-0	5	#4	21'-0	5	#4	22'-0	5	#4	23'-0	5	#4	24'-0	6	#4	25'-0	6	#4	26'-0	6	#4	27'-0
n2	str	1	#4	18'-0	1	#4	19'-0	1	#4	20'-0	1	#4	21'-0	1	#4	22'-0	1	#4	23'-0	1	#4	24'-0	1	#4	25'-0	1	#4	26'-0	1	#4	27'-0
p	str	4	#5	12'-0	4	#5	12'-6	4	#5	13'-0	4	#5	13'-9	4	#5	14'-3	4	#5	14'-9	4	#5	15'-6	4	#5	16'-3	4	#5	17'-0	4	#5	17'-6
q	str	2	#6	14'-0	2	#6	14'-6	2	#6	15'-0	2	#6	15'-6	2	#6	16'-3	2	#6	16'-9	2	#6	17'-6	2	#6	18'-3	2	#6	19'-0	2	#6	19'-6
u	B	7	#4	5'-0	7	#4	5'-0	8	#4	5'-0	8	#4	5'-0	8	#4	5'-0	9	#4	5'-0	9	#4	5'-0	10	#4	5'-0	10	#4	5'-0	10	#4	5'-0
v	str	1	#4	16'-0	1	#4	17'-0	1	#4	18'-0	1	#4	19'-0	1	#4	20'-0	1	#4	21'-0	1	#4	22'-0	1	#4	23'-0	1	#4	24'-0	1	#4	25'-0
w	str	1	#4	11'-0	1	#4	11'-6	1	#4	12'-0	1	#4	12'-6	1	#4	13'-0	1	#4	13'-6	1	#4	14'-0	1	#4	14'-6	1	#4	15'-0	1	#4	15'-6

Pipe Diameter

	90"	96"	102"	108"	114"	120"	126"	132"	138"	144"
A	0'- 3	0'- 6	0'- 3	0'- 6	0'- 3	0'- 6	0'- 3	0'- 6	0'- 3	0'- 6
B	2'- 2	2'- 2	2'- 3	2'- 3	2'- 4	2'- 4	2'- 5	2'- 5	2'- 6	2'- 6
C	1'- 4	1'- 4	1'- 4	1'- 5	1'- 5	1'- 5	1'- 5	1'- 6	1'- 6	1'- 6
D	3'- 0	3'- 4	3'- 7	3'-10	4'- 1	4'- 5	4'- 8	4'-11	5'- 2	5'- 6
E	6'- 6	6'-10	7'- 2	7'- 6	7'-10	8'- 2	8'- 6	8'-10	9'- 2	9'- 6
F	16'- 0	17'- 0	18'- 0	19'- 0	20'- 0	21'- 0	22'- 0	23'- 0	24'- 0	25'- 0
G	5'- 6	5'- 9 3/8	6'- 0 7/8	6'- 4 3/8	6'- 7 7/8	6'-11 1/4	7'- 2 3/4	7'- 6 1/4	7'- 9 5/8	8'- 1/8
H	9'- 6	10'- 0	10'- 6	11'- 0	11'- 6	12'- 0	12'- 6	13'- 0	13'- 6	14'- 0
J	3'- 8	3'-10	4'- 0	4'- 2	4'- 4	4'- 6	4'- 8	4'-10	5'- 0	5'- 2
K	18'-11 1/4	20'- 0 3/4	21'- 1 7/8	22'- 3 1/4	23'- 4 3/8	24'- 5 7/8	25'- 7 5/8	26'- 9 1/8	27'-10 1/4	28'-11 5/8
L	7'- 5 1/4	7'-10 1/8	8'- 2 3/4	8'- 7 5/8	9'- 0 1/4	9'- 5 1/8	9'-10 3/8	10'- 3 3/8	10'- 7 7/8	11'- 0 3/4
M	5'- 0 7/8	5'- 4 3/8	5'- 7 3/8	5'-10 7/8	6'- 2	6'- 5 1/2	6'- 9 1/4	7'- 0 3/4	7'- 3 7/8	7'- 7 3/8
N	0'- 3	0'- 3	0'- 3	0'- 3	0'- 3	0'- 3	0'- 3	0'- 3	0'- 3	0'- 3
P	10'-10	11'- 5 3/8	11'-11 7/8	12'- 7 3/8	13'- 1 7/8	13'- 9 1/4	14'- 5 3/4	15'- 1 1/4	15'- 7 5/8	16'- 3 1/8
R	11'- 0	11'- 6	12'- 0	12'- 6	13'- 0	13'- 6	14'- 0	14'- 6	15'- 0	15'- 6
S	3'- 0	3'- 3	3'- 6	3'- 9	4'- 0	4'- 3	4'- 6	4'- 9	5'- 0	5'- 3
T	17'- 4	18'- 2	18'-11	19'- 9	20'- 6	21'- 4	22'- 3	23'- 1	23'-10	24'- 8
V	4'- 4	4'- 7 3/8	4'- 9 7/8	5'- 1 3/8	5'- 3 7/8	5'- 7 1/4	5'-11 3/4	6'- 3 1/4	6'- 5 5/8	6'- 9 1/8
W	6'- 6	6'- 9 3/8	7'- 0 7/8	7'- 4 3/8	7'- 7 7/8	7'-11 1/4	8'- 4 3/4	8'- 8 1/4	8'-11 5/8	9'- 3 1/8
X	5'- 8	5'-11 3/8	6'- 2 7/8	6'- 6 3/8	6'- 9 3/4	7'- 1 1/4	7'- 7 7/8	7'-11 1/4	8'- 2 3/4	8'- 6 1/4

QUANTITIES

PIPE Dia.	REINF Lbs.	CONCRETE C.Y.
90"	1345	25.6
96"	1440	28.0
102"	1775	30.5
108"	1985	33.3
114"	2175	36.1
120"	2465	38.9
126"	2690	44.2
132"	3150	47.6
138"	3355	50.9
144"	3570	54.4

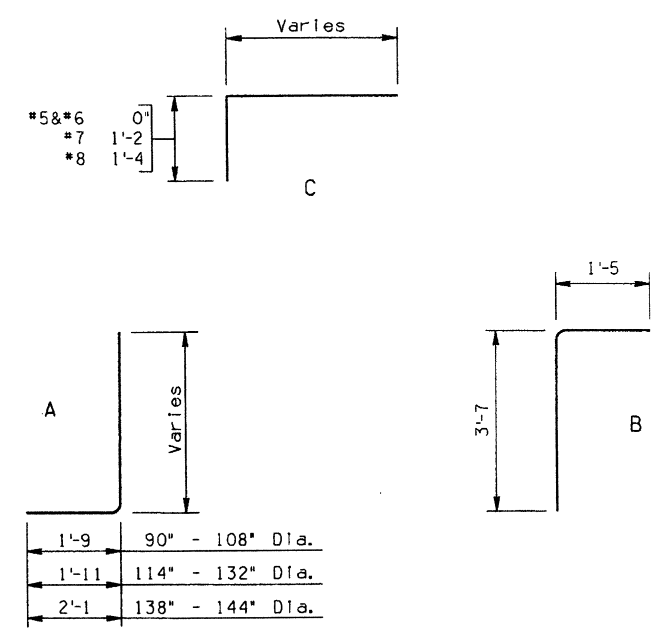

BENDS

NOTE:
Quantities and steel list shown are for one headwall.

DESIGN APPROVED	ARIZONA DEPARTMENT OF TRANSPORTATION HIGHWAYS DIVISION STANDARD DRAWINGS	REVISION 4-92
APPROVED FOR DISTRIBUTION	INLET HEADWALLS 30° SKEW PIPE CULVERT 2:1 SLOPE	STANDARD NO. B-14.20

Registered Professional Engineer (Civil) Certificate No. 9910 F. DANIEL DAVIS Date Signed 5-14-92 Arizona U.S.A.

			NO	DESCRIPTION OF REVISIONS	MADE BY	DATE
DESIGN	K.W.	2-92	1			
DRAWN	J.M.	4-92	2			
CHECKED	G.K.	4-92	3			
			4			

STEEL LIST

Mark	Bend	90" Dia.			96" Dia.			102" Dia.			108" Dia.			114" Dia.			120" Dia.			126" Dia.			132" Dia.			138" Dia.			144" Dia.		
		No	Size	Lgth	No	Size	Lgth	No	Size	Lgth	No	Size	Lgth	No	Size	Lgth	No	Size	Lgth	No	Size	Lgth	No	Size	Lgth	No	Size	Lgth	No	Size	Lgth
a1	A	4	#5	7'-9	4	#5	8'-3	5	#5	8'-6	5	#5	8'-9	5	#5	9'-3	5	#5	9'-9	5	#5	10'-0	5	#5	10'-3	5	#5	10'-9	6	#5	11'-3
a2	A	4	#5	8'-6	4	#5	9'-0	4	#5	9'-3	5	#5	9'-6	5	#5	10'-0	5	#5	10'-6	5	#5	10'-9	5	#5	11'-3	5	#6	11'-6	5	#6	12'-0
a3	A	4	#5	9'-3	4	#5	9'-6	4	#5	10'-0	4	#5	10'-3	5	#5	11'-0	5	#6	11'-3	5	#6	11'-6	5	#6	12'-0	5	#6	12'-6	5	#7	13'-0
a4	A	4	#5	10'-0	4	#5	10'-3	4	#5	10'-6	4	#5	11'-0	4	#6	11'-9	5	#6	12'-0	5	#7	12'-6	5	#7	12'-9	5	#7	13'-3	5	#7	13'-9
a5	A	4	#5	10'-9	4	#5	11'-0	4	#6	11'-3	4	#6	11'-9	4	#7	12'-6	4	#7	13'-0	5	#7	13'-3	5	#7	13'-9	5	#7	14'-3	5	#8	14'-9
a6	A	4	#5	11'-6	4	#6	11'-9	4	#6	12'-0	4	#7	12'-6	4	#7	13'-6	4	#7	13'-9	4	#7	14'-3	5	#8	14'-6	5	#8	15'-0	5	#8	15'-6
a7	A	3	#6	12'-3	4	#6	12'-6	4	#7	12'-9	4	#7	13'-3	4	#7	14'-3	4	#7	14'-6	4	#8	15'-0	4	#8	15'-6	5	#8	16'-0	5	#8	16'-6
a8	A	4	#5	8'-0	4	#5	8'-3	4	#5	8'-6	4	#5	8'-9	5	#5	9'-3	5	#5	9'-6	5	#5	9'-9	5	#5	10'-0	5	#5	10'-6	6	#5	10'-9
a9	A	4	#5	9'-0	4	#5	9'-3	4	#5	9'-6	4	#5	9'-9	4	#5	10'-6	5	#5	10'-9	5	#5	11'-0	5	#6	11'-3	5	#6	11'-9	5	#6	12'-3
a10	A	3	#5	10'-0	4	#5	10'-3	4	#5	10'-9	4	#5	11'-0	4	#6	11'-6	4	#6	12'-0	5	#6	12'-3	5	#7	12'-6	5	#7	13'-0	5	#7	13'-9
a11	A	3	#5	11'-0	3	#6	11'-6	4	#6	11'-9	4	#6	12'-3	4	#7	12'-9	4	#7	13'-3	4	#7	13'-6	5	#7	14'-0	5	#7	14'-6	5	#8	15'-0
a12	A	3	#6	11'-9	3	#6	12'-6	3	#7	12'-9	4	#7	13'-3	4	#7	14'-0	4	#7	14'-6	4	#7	14'-9	4	#7	15'-3	5	#8	15'-9	5	#8	16'-6
b1	str	2	#4	26'-6	2	#4	27'-6	2	#4	28'-6	2	#4	29'-6	2	#4	30'-6	2	#4	31'-6	2	#4	32'-6	2	#4	33'-6	2	#4	34'-6	2	#4	35'-6
b2	str	6	#4	26'-0	6	#4	27'-0	8	#4	28'-0	8	#4	29'-0	8	#4	30'-0	8	#4	31'-0	10	#4	32'-0	10	#4	33'-0	10	#4	34'-0	10	#4	35'-0
b3	str	2	#4	23'-6	2	#4	26'-0	2	#4	20'-6	2	#4	24'-0	2	#4	25'-6	2	#4	29'-0	2	#4	23'-6	2	#4	26'-6	2	#4	29'-6	2	#4	32'-0
b4	str	2	#4	14'-6	2	#4	17'-3	2	#4	11'-6	2	#4	15'-3	2	#4	17'-0	2	#4	20'-3	2	#4	14'-6	2	#4	17'-6	2	#4	20'-6	2	#4	23'-3
b5	str	2	#4	5'-6	2	#4	8'-6	2	#4	3'-0	2	#4	6'-6	2	#4	8'-6	2	#4	11'-3	2	#4	5'-6	2	#4	8'-6	2	#4	11'-6	2	#4	14'-9
b6	str																2	#4	2'-6							2	#4	2'-6	2	#4	6'-0
b7	str	2	#4	16'-6	2	#4	17'-6	2	#4	18'-6	2	#4	19'-6	2	#4	20'-6	2	#4	21'-6	2	#4	22'-6	2	#4	23'-6	2	#4	24'-6	2	#4	25'-6
b8	str	6	#4	16'-0	8	#4	17'-0	8	#4	18'-0	8	#4	19'-0	8	#4	20'-0	8	#4	21'-0	8	#4	22'-0	8	#4	23'-0	10	#4	24'-0	10	#4	25'-0
b9	str	2	#4	14'-9	2	#4	11'-6	2	#4	13'-0	2	#4	15'-6	2	#4	17'-3	2	#4	19'-6	2	#4	20'-6	2	#4	22'-6	2	#4	19'-0	2	#4	21'-6
b10	str	2	#4	9'-0	2	#4	5'-6	2	#4	7'-6	2	#4	10'-0	2	#4	11'-3	2	#4	13'-6	2	#4	14'-9	2	#4	16'-9	2	#4	13'-3	2	#4	15'-9
b11	str	2	#4	3'-6				2	#4	2'-0	2	#4	4'-6	2	#4	5'-6	2	#4	7'-6	2	#4	9'-3	2	#4	11'-0	2	#4	7'-9	2	#4	10'-0
b12	str																2	#4	2'-0	2	#4	3'-6	2	#4	5'-3	2	#4	2'-0	2	#4	4'-3
c	str	5	#4	10'-6	5	#4	11'-0	5	#4	11'-6	5	#4	12'-0	5	#4	12'-6	5	#4	13'-0	5	#4	13'-6	5	#4	14'-0	5	#4	14'-6	5	#4	15'-0
d	A	6	#6	12'-3	6	#6	12'-9	6	#7	13'-3	6	#7	13'-9	6	#7	14'-6	6	#7	15'-0	6	#8	15'-6	6	#8	16'-0	6	#8	16'-6	6	#8	17'-0
e1	C	4	#5	3'-6	4	#5	3'-9	5	#5	3'-9	5	#5	4'-0	5	#5	4'-0	5	#5	4'-3	5	#5	4'-3	5	#5	4'-6	5	#5	4'-6	5	#5	4'-9
e2	C	4	#5	3'-9	4	#5	4'-0	4	#5	4'-0	5	#5	4'-6	5	#5	4'-6	5	#5	4'-9	5	#5	4'-9	5	#5	5'-0	5	#6	5'-0	5	#6	5'-3
e3	C	4	#5	4'-3	4	#5	4'-6	4	#5	4'-6	4	#5	4'-9	4	#5	5'-0	5	#5	5'-3	5	#6	5'-3	5	#6	5'-6	5	#6	5'-6	5	#6	5'-9
e4	C	4	#5	4'-6	4	#5	4'-9	4	#5	5'-0	4	#5	5'-3	4	#5	5'-3	4	#6	5'-6	5	#6	5'-9	5	#6	6'-0	5	#7	7'-0	5	#7	7'-6
e5	C	4	#5	4'-9	4	#5	5'-0	4	#5	5'-3	4	#5	5'-6	4	#6	5'-9	4	#6	6'-0	4	#7	7'-6	5	#7	7'-6	5	#7	7'-9	5	#7	8'-0
e6	C	4	#5	5'-3	4	#5	5'-6	4	#5	5'-9	4	#6	6'-0	4	#6	6'-3	4	#7	7'-6	4	#7	7'-9	4	#7	8'-0	5	#7	8'-3	5	#8	8'-6
e7	C	3	#5	5'-6	4	#6	5'-9	4	#6	6'-0	4	#6	6'-6	4	#7	7'-9	4	#7	8'-0	4	#7	8'-3	4	#7	8'-6	4	#8	9'-0	5	#8	9'-3
e8	C	2	#5	5'-9	2	#6	6'-0	2	#6	6'-3	2	#6	6'-9	3	#7	8'-0	3	#7	8'-3	3	#7	8'-9	3	#7	9'-0	3	#8	9'-6	3	#8	9'-9
e9	C	9	#5	5'-9	10	#6	6'-0	10	#6	6'-3	11	#6	6'-9	11	#7	8'-0	12	#7	8'-3	12	#7	8'-9	13	#7	9'-0	13	#8	9'-6	14	#8	9'-9
e10	C	5	#5	5'-9	5	#6	6'-0	5	#6	6'-3	6	#6	6'-9	6	#7	8'-0	6	#7	8'-3	6	#7	8'-9	7	#7	9'-0	7	#8	9'-6	7	#8	9'-9
e11	C	4	#5	5'-6	4	#6	5'-9	4	#6	6'-0	4	#6	6'-6	4	#6	6'-9	5	#7	7'-9	5	#7	8'-0	5	#7	8'-3	5	#7	8'-6	5	#7	9'-0
e12	C	3	#5	5'-0	4	#5	5'-3	4	#5	5'-6	4	#5	5'-9	4	#5	6'-0	4	#6	6'-3	5	#6	6'-6	5	#6	6'-6	5	#7	7'-9	5	#7	8'-0
e13	C	3	#5	4'-6	3	#5	4'-9	4	#5	4'-9	4	#5	5'-3	4	#5	5'-3	4	#5	5'-6	4	#5	5'-9	5	#5	6'-0	5	#6	6'-0	5	#6	6'-3
e14	C	3	#5	4'-0	3	#5	4'-3	3	#5	4'-3	4	#5	4'-6	4	#5	4'-6	4	#5	4'-9	4	#5	5'-0	4	#5	5'-3	5	#5	5'-3	5	#5	5'-6
e15	C	3	#5	3'-6	3	#5	3'-9	3	#5	3'-9	3	#5	4'-0	4	#5	4'-0	4	#5	4'-3	4	#5	4'-3	4	#5	4'-6	4	#5	4'-6	5	#5	4'-9
f1	str	5	#4	6'-3	5	#4	6'-6	5	#4	6'-9	5	#4	7'-0	5	#4	7'-6	6	#4	7'-9	6	#4	8'-0	6	#4	8'-6	6	#4	8'-9	6	#4	9'-0
f2	str	5	#4	7'-6	5	#4	7'-9	5	#4	8'-0	5	#4	8'-3	5	#4	8'-9	5	#4	9'-3	6	#4	9'-6	6	#4	10'-0	6	#4	10'-3	6	#4	10'-6
f3	str	4	#4	8'-9	4	#4	9'-0	5	#4	9'-3	5	#4	9'-9	5	#4	10'-3	5	#4	10'-6	5	#4	11'-0	5	#4	11'-6	6	#4	12'-0	6	#4	12'-3
f4	str	4	#4	9'-9	4	#4	10'-3	4	#4	10'-6	5	#4	11'-0	5	#4	11'-6	5	#4	12'-0	5	#4	12'-6	5	#4	13'-0	5	#4	13'-6	6	#4	13'-9
f5	str	3	#4	6'-6	3	#4	6'-9	3	#4	7'-0	4	#4	7'-3	4	#4	7'-6	4	#4	7'-9	4	#4	8'-0	4	#4	8'-3	4	#4	8'-6	5	#4	8'-9
f6	str	3	#4	7'-9	3	#4	8'-0	3	#4	8'-3	3	#4	8'-6	4	#4	9'-0	4	#4	9'-3	4	#4	9'-6	4	#4	9'-9	4	#4	10'-0	4	#4	10'-6
f7	str	3	#4	8'-9	3	#4	9'-0	3	#4	9'-6	3	#4	10'-0	3	#4	10'-3	3	#4	10'-6	4	#4	11'-3	4	#4	11'-6	4	#4	11'-9	4	#4	12'-3
f8	str	2	#4	10'-0	3	#4	10'-3	3	#4	10'-9	3	#4	11'-3	3	#4	11'-9	3	#4	12'-0	3	#4	12'-9	4	#4	13'-0	4	#4	13'-3	4	#4	14'-0
g	str	2	#4	10'-0	2	#4	10'-6	2	#4	11'-0	2	#4	11'-6	2	#4	12'-0	2	#4	12'-6	2	#4	13'-0	2	#4	13'-6	2	#4	14'-3	2	#4	14'-9
m1	str	4	#4	28'-6	4	#4	29'-9	4	#4	30'-9	5	#4	31'-9	5	#4	33'-0	5	#4	34'-0	5	#4	35'-0	6	#4	36'-3	6	#4	37'-3	6	#4	38'-6
m2	str	1	#4	28'-6	1	#4	29'-9	1	#4	30'-9	1	#4	31'-9	1	#4	33'-0	1	#4	34'-0	1	#4	35'-0	1	#4	36'-3	1	#4	37'-3	1	#4	38'-6
m3	str	4	#4	21'-9	4	#4	23'-0	4	#4	24'-3	5	#4	25'-6	5	#4	26'-9	5	#4	28'-0	5	#4	29'-6	6	#4	30'-9	6	#4	32'-0	6	#4	33'-3
m4	str	1	#4	21'-9	1	#4	23'-0	1	#4	24'-3	1	#4	25'-6	1	#4	26'-9	1	#4	28'-0	1	#4	29'-6	1	#4	30'-9	1	#4	32'-0	1	#4	33'-3
n1	str	4	#4	17'-6	4	#4	18'-6	4	#4	19'-3	5	#4	20'-3	5	#4	21'-0	5	#4	22'-0	5	#4	23'-3	6	#4	24'-0	6	#4	25'-0	6	#4	26'-0
n2	str	1	#4	17'-6	1	#4	18'-6	1	#4	19'-3	1	#4	20'-3	1	#4	21'-0	1	#4	22'-0	1	#4	23'-3	1	#4	24'-0	1	#4	25'-0	1	#4	26'-0
p	str	4	#5	12'-0	4	#5	12'-6	4	#5	13'-0	4	#5	13'-9	4	#5	14'-3	4	#5	15'-0	4	#5	15'-6	4	#5	16'-3	4	#5	17'-0	4	#5	17'-6
q	str	2	#6	14'-0	2	#6	14'-6	2	#6	15'-0	2	#6	15'-9	2	#6	16'-3	2	#6	17'-0	2	#6	17'-6	2	#6	18'-3	2	#6	19'-0	2	#6	19'-6
u	B	7	#4	5'-0	7	#4	5'-0	8	#4	5'-0	8	#4	5'-0	8	#4	5'-0	9	#4	5'-0	9	#4	5'-0	10	#4	5'-0	10	#4	5'-0	10	#4	5'-0
v	str	1	#4	26'-6	1	#4	27'-6	1	#4	28'-6	1	#4	29'-6	1	#4	30'-6	1	#4	31'-6	1	#4	32'-6	1	#4	33'-6	1	#4	34'-6	1	#4	35'-6
w	str	1	#4	15'-6	1	#4	16'-6	1	#4	17'-6	1	#4	18'-6	1	#4	19'-6	1	#4	20'-6	1	#4	21'-6	1	#4	22'-6	1	#4	23'-6	1	#4	24'-6

Pipe Diameter

	90"	96"	102"	108"	114"	120"	126"	132"	138"	144"
A	0'- 3	0'- 3	0'- 3	0'- 3	0'- 3	0'- 3	0'- 3	0'- 3	0'- 3	0'- 3
B	2'- 2	2'- 2	2'- 3	2'- 3	2'- 4	2'- 4	2'- 5	2'- 5	2'- 6	2'- 6
C	1'- 9	1'-10	1'-11	2'- 0	2'- 1	2'- 2	2'- 3	2'- 4	2'- 5	2'- 6
D	2'- 4	2'- 6	2'- 8	2'-10	3'- 0	3'- 2	3'- 4	3'- 6	3'- 8	3'-10
E	6'- 3	6'- 6	6'-10	7'- 1	7'- 5	7'- 8	8'- 0	8'- 3	8'- 7	8'-10
F	26'- 0	27'- 0	28'- 0	29'- 0	30'- 0	31'- 0	32'- 0	33'- 0	34'- 0	35'- 0
G	5'- 6	5'- 9 3/8	6'- 0 7/8	6'- 4 3/8	6'- 7 7/8	6'-11 1/4	7'- 2 3/4	7'- 6 1/4	7'- 9 5/8	8'- 1 1/8
H	9'- 6	10'- 0	10'- 6	11'- 0	11'- 6	12'- 0	12'- 6	13'- 0	13'- 6	14'- 0
J	5'- 0	5'- 4	5'- 8	6'- 0	6'- 4	6'- 8	7'- 0	7'- 4	7'- 8	8'- 0
K	28'-10 1/4	29'-11 1/4	31'- 0 3/8	32'- 1 1/2	33'- 2 5/8	34'- 3 5/8	35'- 5 1/2	36'- 6 5/8	37'- 7 5/8	38'- 8 3/4
L	7'- 4 1/8	7'- 8 3/4	8'- 1 1/4	8'- 5 7/8	8'-10 3/8	9'- 3	9'- 8 1/4	10'- 0 3/4	10'- 5 3/8	10'- 9 7/8
M	5'- 0 7/8	5'- 4 3/8	5'- 7 3/8	5'-10 7/8	6'- 2	6'- 5 1/2	6'- 9 1/4	7'- 0 3/4	7'- 3 7/8	7'- 7 3/8
N	0'- 3	0'- 3	0'- 3	0'- 3	0'- 3	0'- 3	0'- 3	0'- 3	0'- 3	0'- 3
P	10'- 7	11'- 1 3/8	11'- 7 7/8	12'- 2 3/8	12'- 8 7/8	13'- 3 1/4	13'-11 3/4	14'- 6 1/4	15'- 0 5/8	15'- 7 1/8
R	16'- 0	17'- 0	18'- 0	19'- 0	20'- 0	21'- 0	22'- 0	23'- 0	24'- 0	25'- 0
S	5'- 3	5'- 6	5'- 9	6'- 0	6'- 3	6'- 6	6'- 9	7'- 0	7'- 3	7'- 6
T	22'- 1	23'- 4	24'- 7	25'-10	27'- 1	28'- 4	29'- 9	31'- 0	32'- 3	33'- 6
V	4'- 4	4'- 7 3/8	4'- 9 7/8	5'- 1 3/8	5'- 3 7/8	5'- 7 1/4	5'-11 3/4	6'- 3 1/4	6'- 5 5/8	6'- 9 1/8
W	6'- 6	6'- 9 3/8	7'- 0 7/8	7'- 4 3/8	7'- 7 7/8	7'-11 1/4	8'- 4 3/4	8'- 8 1/4	8'-11 5/8	9'- 3 1/8
X	5'- 8	5'-11 3/8	6'- 2 7/8	6'- 6 3/8	6'- 9 3/4	7'- 1 1/4	7'- 7 7/8	7'-11 1/4	8'- 2 3/4	8'- 6 1/4

QUANTITIES

PIPE Dia.	REINF Lbs.	CONCRETE C.Y.
90"	1785	34.6
96"	2040	37.8
102"	2285	40.9
108"	2585	44.6
114"	3000	48.3
120"	3300	51.9
126"	3680	59.5
132"	4145	63.6
138"	4705	68.2
144"	5145	72.6

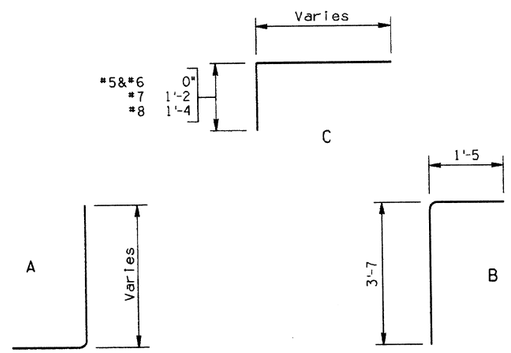

1'-9	90" - 108" Dia.
1'-11	114" - 132" Dia.
2'-1	138" - 144" Dia.

BENDS

NOTE:
Quantities and steel list shown are for one headwall.

DESIGN	K. M.	2-92
DRAWN	J. M.	4-92
CHECKED	G. K.	4-92

NO	DESCRIPTION OF REVISIONS	MADE BY	DATE
1			
2			
3			
4			

DESIGN APPROVED

APPROVED FOR DISTRIBUTION

ARIZONA
DEPARTMENT OF TRANSPORTATION
HIGHWAYS DIVISION
STANDARD DRAWINGS

INLET HEADWALLS
30° SKEW PIPE CULVERT
4:1 SLOPE

REVISION 4-92

STANDARD NO. B-14.30

ZF1k051@20JSB1430.DGN;5
08-MAY-1992 07:56
VIEW NAME:

STEEL LIST

Mark	Bend	90" Dia. No	90" Dia. Size	90" Dia. Lgth	96" Dia. No	96" Dia. Size	96" Dia. Lgth	102" Dia. No	102" Dia. Size	102" Dia. Lgth	108" Dia. No	108" Dia. Size	108" Dia. Lgth	114" Dia. No	114" Dia. Size	114" Dia. Lgth
a1	A	5	#5	8'-6	5	#5	9'-0	6	#5	9'-3	6	#5	9'-6	6	#5	10'-3
a2	A	5	#5	9'-0	5	#5	9'-6	5	#5	9'-9	6	#5	10'-3	6	#5	10'-9
a3	A	5	#5	9'-9	5	#5	10'-3	5	#5	10'-6	5	#5	11'-0	6	#6	11'-6
a4	A	5	#5	10'-3	5	#5	10'-9	5	#5	11'-0	5	#6	11'-6	6	#6	12'-0
a5	A	5	#5	10'-9	5	#6	11'-3	5	#6	11'-6	5	#6	12'-3	5	#7	12'-9
a6	A	4	#6	11'-6	5	#6	12'-0	5	#6	12'-3	5	#7	12'-9	5	#7	13'-6
a7	A	4	#6	12'-0	4	#6	12'-6	5	#7	12'-9	5	#7	13'-6	5	#7	14'-0
a8	A	5	#5	8'-6	5	#5	9'-0	5	#5	9'-3	5	#5	9'-6	5	#5	10'-3
a9	A	4	#5	9'-3	5	#5	9'-9	5	#5	10'-3	5	#5	10'-6	5	#5	11'-0
a10	A	4	#5	10'-3	4	#5	10'-9	5	#6	11'-3	5	#6	11'-6	5	#6	12'-0
a11	A	4	#5	11'-3	4	#6	11'-6	4	#6	12'-0	5	#7	12'-3	5	#7	13'-0
a12	A	4	#6	12'-0	4	#6	12'-6	4	#7	13'-0	4	#7	13'-3	5	#7	14'-0
b1	str	2	#4	32'-3	2	#4	33'-9	2	#4	35'-3	2	#4	36'-9	2	#4	38'-3
b2	str	8	#4	32'-0	8	#4	33'-6	8	#4	35'-0	8	#4	36'-6	10	#4	38'-0
b3	str	2	#4	22'-0	2	#4	26'-0	2	#4	30'-0	2	#4	35'-0	2	#4	26'-0
b4	str	2	#4	8'-0	2	#4	12'-6	2	#4	17'-0	2	#4	22'-6	2	#4	11'-6
b5	str							2	#4	4'-0	2	#4	10'-0			
b6	str															
b7	str	2	#4	20'-3	2	#4	21'-3	2	#4	22'-3	2	#4	23'-3	2	#4	24'-3
b8	str	8	#4	20'-0	8	#4	21'-0	8	#4	22'-0	8	#4	23'-0	10	#4	24'-0
b9	str	2	#4	13'-6	2	#4	16'-0	2	#4	19'-3	2	#4	21'-0	2	#4	15'-6
b10	str	2	#4	6'-0	2	#4	8'-6	2	#4	11'-0	2	#4	13'-3	2	#4	8'-0
b11	str							2	#4	2'-9	2	#4	5'-6			
b12	str															
c	str	5	#4	10'-6	5	#4	11'-0	5	#4	11'-6	5	#4	12'-0	5	#4	12'-6
d	A	6	#6	12'-3	6	#6	12'-9	6	#7	13'-3	6	#7	13'-9	6	#7	14'-6
e1	C	7	#5	4'-3	6	#5	4'-3	6	#5	4'-6	7	#5	4'-9	6	#5	4'-9
e2	C	7	#5	4'-6	6	#5	4'-6	6	#5	4'-9	6	#5	5'-0	6	#5	5'-0
e3	C	7	#5	4'-9	6	#5	4'-9	6	#5	5'-0	6	#5	5'-3	6	#5	5'-3
e4	C	6	#5	5'-0	6	#5	5'-0	6	#5	5'-3	6	#5	5'-6	6	#6	5'-6
e5	C	6	#5	5'-3	5	#5	5'-3	6	#5	5'-6	6	#6	5'-9	5	#6	5'-9
e6	C				5	#5	5'-6	6	#6	5'-9	6	#6	6'-0	5	#7	7'-3
e7	C													5	#7	7'-6
e8	C	3	#5	5'-6	3	#5	5'-9	3	#6	6'-0	3	#6	6'-3	3	#7	7'-9
e9	C	9	#5	5'-6	10	#5	5'-9	10	#6	6'-0	11	#6	6'-3	11	#7	7'-9
e10	C	5	#5	5'-6	5	#5	5'-9	5	#6	6'-0	6	#6	6'-3	6	#7	7'-9
e11	C	4	#5	5'-3	4	#5	5'-6	4	#6	5'-9	4	#6	6'-0	4	#7	7'-3
e12	C	4	#5	5'-0	4	#5	5'-3	4	#5	5'-6	4	#5	5'-9	5	#6	5'-9
e13	C	4	#5	4'-9	4	#5	4'-9	4	#5	5'-0	5	#5	5'-3	5	#5	5'-6
e14	C	4	#5	4'-6	4	#5	4'-6	5	#5	4'-9	5	#5	5'-0	5	#5	5'-0
e15	C	4	#5	4'-3	5	#5	4'-3	5	#5	4'-6	5	#5	4'-9	5	#5	4'-9
f1	str	6	#4	7'-0	6	#4	7'-3	6	#4	7'-9	7	#4	8'-0	7	#4	8'-3
f2	str	6	#4	8'-0	6	#4	8'-3	6	#4	8'-9	6	#4	9'-3	7	#4	9'-6
f3	str	5	#4	8'-9	6	#4	9'-3	6	#4	9'-9	6	#4	10'-3	6	#4	10'-6
f4	str	5	#4	9'-9	5	#4	10'-3	6	#4	10'-9	6	#4	11'-3	6	#4	11'-6
f5	str	4	#4	7'-0	4	#4	7'-3	4	#4	7'-9	4	#4	8'-0	4	#4	8'-3
f6	str	4	#4	8'-0	4	#4	8'-3	4	#4	8'-9	4	#4	9'-0	4	#4	9'-6
f7	str	3	#4	9'-0	3	#4	9'-6	4	#4	10'-0	4	#4	10'-3	4	#4	10'-6
f8	str	3	#4	10'-0	3	#4	10'-6	3	#4	11'-0	4	#4	11'-3	4	#4	11'-9
g	str	2	#4	10'-0	2	#4	10'-6	2	#4	11'-0	2	#4	11'-6	2	#4	12'-0
m1	str	4	#4	34'-6	4	#4	36'-0	4	#4	37'-6	4	#4	39'-3	4	#4	40'-9
m2	str	1	#4	34'-6	1	#4	36'-0	1	#4	37'-6	1	#4	39'-3	1	#4	40'-9
m3	str	4	#4	25'-6	4	#4	26'-9	4	#4	28'-0	4	#4	29'-3	4	#4	30'-6
m4	str	1	#4	25'-6	1	#4	26'-9	1	#4	28'-0	1	#4	29'-3	1	#4	30'-6
n1	str	4	#4	17'-0	4	#4	18'-0	4	#4	18'-9	4	#4	19'-9	4	#4	20'-6
n2	str	1	#4	17'-0	1	#4	18'-0	1	#4	18'-9	1	#4	19'-9	1	#4	20'-6
p	str	4	#5	12'-0	4	#5	12'-6	4	#5	13'-0	4	#5	13'-9	4	#5	14'-3
q	str	2	#6	14'-0	2	#6	14'-6	2	#6	15'-0	2	#6	15'-9	2	#6	16'-3
u	B	7	#4	5'-0	7	#4	5'-0	8	#4	5'-0	8	#4	5'-0	8	#4	5'-0
v	str	1	#4	32'-6	1	#4	34'-0	1	#4	35'-6	1	#4	37'-0	1	#4	38'-6
w	str	1	#4	20'-0	1	#4	21'-0	1	#4	22'-0	1	#4	23'-0	1	#4	24'-0

Mark	Bend	120" Dia. No	120" Dia. Size	120" Dia. Lgth	126" Dia. No	126" Dia. Size	126" Dia. Lgth	132" Dia. No	132" Dia. Size	132" Dia. Lgth	138" Dia. No	138" Dia. Size	138" Dia. Lgth	144" Dia. No	144" Dia. Size	144" Dia. Lgth
a1	A	6	#5	10'-6	6	#5	10'-9	7	#6	11'-3	7	#6	11'-9	7	#6	12'-0
a2	A	6	#5	11'-3	6	#6	11'-6	6	#6	12'-0	7	#6	12'-6	7	#7	12'-9
a3	A	6	#6	11'-9	6	#6	12'-3	6	#7	12'-6	7	#7	13'-3	7	#7	13'-6
a4	A	6	#7	12'-6	6	#7	12'-9	6	#7	13'-3	6	#7	14'-0	7	#7	14'-3
a5	A	6	#7	13'-3	6	#7	13'-6	6	#7	14'-0	6	#8	14'-9	6	#8	15'-0
a6	A	5	#7	14'-0	6	#7	14'-3	6	#8	14'-9	6	#8	15'-6	6	#8	15'-9
a7	A	5	#7	14'-9	6	#8	15'-0	6	#8	15'-6	6	#8	16'-3	6	#8	16'-6
a8	A	6	#5	10'-6	6	#5	10'-9	6	#6	11'-3	6	#6	11'-9	6	#6	12'-0
a9	A	5	#6	11'-6	6	#6	11'-9	6	#6	12'-3	6	#7	12'-9	6	#7	13'-0
a10	A	5	#6	12'-6	5	#7	13'-0	6	#7	13'-3	6	#7	14'-0	6	#7	14'-3
a11	A	5	#7	13'-9	5	#7	14'-0	5	#8	14'-3	6	#8	15'-0	6	#8	15'-3
a12	A	5	#7	14'-9	5	#8	15'-0	5	#8	15'-6	5	#8	16'-3	6	#8	16'-6
b1	str	2	#4	39'-9	2	#4	41'-3	2	#4	42'-9	2	#4	44'-3	2	#4	45'-9
b2	str	10	#4	39'-6	10	#4	41'-0	10	#4	42'-6	10	#4	44'-0	12	#4	45'-6
b3	str	2	#4	28'-6	2	#4	32'-6	2	#4	38'-6	2	#4	43'-0	2	#4	35'-0
b4	str	2	#4	16'-0	2	#4	19'-9	2	#4	25'-3	2	#4	30'-0	2	#4	22'-0
b5	str	2	#4	3'-6	2	#4	7'-0	2	#4	12'-0	2	#4	17'-0	2	#4	9'-0
b6	str										2	#4	4'-0			
b7	str	2	#4	25'-3	2	#4	26'-3	2	#4	27'-3	2	#4	28'-3	2	#4	29'-3
b8	str	10	#4	25'-0	10	#4	26'-0	10	#4	27'-0	10	#4	28'-0	12	#4	29'-0
b9	str	2	#4	19'-3	2	#4	22'-0	2	#4	25'-0	2	#4	27'-6	2	#4	22'-0
b10	str	2	#4	10'-9	2	#4	13'-6	2	#4	16'-6	2	#4	19'-3	2	#4	14'-0
b11	str	2	#4	2'-6	2	#4	5'-0	2	#4	8'-0	2	#4	10'-9	2	#4	6'-0
b12	str										2	#4	2'-6			
c	str	5	#4	13'-0	5	#4	13'-6	5	#4	14'-0	5	#4	14'-6	5	#4	15'-0
d	A	6	#7	15'-0	6	#8	15'-6	6	#8	16'-0	6	#8	16'-6	6	#8	17'-0
e1	C	6	#5	5'-0	6	#5	5'-3	7	#5	5'-6	7	#5	5'-6	7	#5	5'-9
e2	C	6	#5	5'-3	6	#5	5'-6	6	#6	5'-9	7	#6	6'-0	7	#6	6'-0
e3	C	6	#5	5'-6	6	#6	5'-9	6	#6	6'-0	7	#6	6'-3	7	#6	6'-3
e4	C	6	#6	5'-9	6	#6	6'-0	6	#7	7'-3	6	#7	7'-6	7	#7	7'-9
e5	C	6	#6	6'-0	6	#7	7'-3	6	#7	7'-6	6	#7	7'-9	6	#7	8'-3
e6	C	5	#7	7'-6	6	#7	7'-6	6	#7	7'-9	6	#7	8'-0	6	#7	8'-6
e7	C	5	#7	7'-9	6	#7	8'-0	6	#7	8'-3	6	#7	8'-6	6	#7	8'-9
e8	C	3	#7	8'-0	3	#7	8'-3	3	#7	8'-6	3	#7	8'-9	3	#8	9'-0
e9	C	12	#7	8'-0	12	#7	8'-3	13	#7	8'-6	13	#7	8'-9	14	#8	9'-0
e10	C	6	#7	8'-0	6	#7	8'-3	7	#7	8'-6	7	#7	8'-9	7	#8	9'-0
e11	C	5	#7	7'-6	5	#7	7'-9	5	#7	8'-0	5	#7	8'-3	5	#7	8'-6
e12	C	5	#6	6'-0	5	#7	7'-6	5	#7	7'-9	5	#7	8'-0	6	#7	8'-0
e13	C	5	#5	5'-9	5	#6	6'-0	5	#6	6'-3	6	#6	6'-6	6	#6	6'-6
e14	C	5	#5	5'-3	5	#5	5'-6	6	#6	5'-9	6	#6	6'-0	6	#6	6'-3
e15	C	5	#5	5'-0	6	#5	5'-3	6	#5	5'-6	6	#5	5'-6	6	#5	5'-9
f1	str	7	#4	8'-9	7	#4	9'-0	8	#4	9'-3	8	#4	9'-9	8	#4	10'-0
f2	str	7	#4	10'-0	7	#4	10'-3	7	#4	10'-6	8	#4	11'-0	8	#4	11'-3
f3	str	7	#4	11'-0	7	#4	11'-3	7	#4	11'-9	7	#4	12'-3	8	#4	12'-9
f4	str	6	#4	12'-0	7	#4	12'-6	7	#4	13'-0	7	#4	13'-6	7	#4	14'-0
f5	str	5	#4	8'-9	5	#4	9'-0	5	#4	9'-3	5	#4	9'-9	5	#4	10'-0
f6	str	4	#4	10'-0	5	#4	10'-3	5	#4	10'-6	5	#4	11'-0	5	#4	11'-3
f7	str	4	#4	11'-0	4	#4	11'-6	4	#4	12'-0	5	#4	12'-6	5	#4	12'-9
f8	str	4	#4	12'-3	4	#4	12'-9	4	#4	13'-3	4	#4	13'-9	5	#4	14'-0
g	str	2	#4	12'-6	2	#4	13'-3	2	#4	13'-9	2	#4	14'-3	2	#4	14'-9
m1	str	5	#4	42'-3	5	#4	44'-0	5	#4	45'-6	5	#4	47'-0	5	#4	48'-9
m2	str	1	#4	42'-3	1	#4	44'-0	1	#4	45'-6	1	#4	47'-0	1	#4	48'-9
m3	str	5	#4	31'-9	5	#4	33'-0	5	#4	34'-3	5	#4	35'-6	5	#4	36'-9
m4	str	1	#4	31'-9	1	#4	33'-0	1	#4	34'-3	1	#4	35'-6	1	#4	36'-9
n1	str	5	#4	21'-6	5	#4	22'-6	5	#4	23'-6	5	#4	24'-3	5	#4	25'-3
n2	str	1	#4	21'-6	1	#4	22'-6	1	#4	23'-6	1	#4	24'-3	1	#4	25'-3
p	str	4	#5	14'-9	4	#5	15'-6	4	#5	16'-3	4	#5	17'-0	4	#5	17'-6
q	str	2	#6	16'-9	2	#6	17'-6	2	#6	18'-3	2	#6	19'-0	2	#6	19'-6
u	B	9	#4	5'-0	9	#4	5'-0	10	#4	5'-0	10	#4	5'-0	10	#4	5'-0
v	str	1	#4	40'-0	1	#4	41'-6	1	#4	43'-0	1	#4	44'-6	1	#4	46'-0
w	str	1	#4	25'-0	1	#4	26'-0	1	#4	27'-0	1	#4	28'-0	1	#4	29'-0

Pipe Diameter

	90"	96"	102"	108"	114"	120"	126"	132"	138"	144"
A	0'- 3	0'- 3	0'- 3	0'- 3	0'- 3	0'- 3	0'- 3	0'- 3	0'- 3	0'- 3
B	2'- 2	2'- 2	2'- 3	2'- 3	2'- 4	2'- 4	2'- 5	2'- 5	2'- 6	2'- 6
C	2'- 4	2'- 6	2'- 7	2'- 9	2'-10	3'- 0	3'- 1	3'- 3	3'- 4	3'- 6
D	1'- 6	1'- 7	1'- 8	1'- 9	1'-10	1'-11	2'- 0	2'- 1	2'- 2	2'- 3
E	6'- 0	6'- 3	6'- 6	6'- 9	7'-0	7'- 3	7'- 6	7'- 9	8'- 0	8'- 3
F	32'- 0	33'- 6	35'- 0	36'- 6	38'- 0	39'- 6	41'- 0	42'- 6	44'- 0	45'- 6
G	5'- 6	5'- 9⅜	6'- 0⅞	6'- 4⅜	6'- 7⅞	6'-11¼	7'- 2¾	7'- 6¼	7'- 9⅝	8'- 1⅛
H	9'- 6	10'- 0	10'- 6	11'- 0	11'- 6	12'- 0	12'- 6	13'- 0	13'- 6	14'- 0
J	5'-10	6'- 2	6'- 6	6'-10	7'- 2	7'- 6	7'-10	8'- 2	8'- 6	8'-10
K	34'- 9⅛	36'- 4¼	37'-10⅞	39'- 6	41'- 0¾	42'- 7⅞	44'- 3¼	45'-10⅜	47'- 5⅛	49'- 0¼
L	7'- 3⅛	7'- 7⅝	7'-11⅞	8'- 4⅜	8'- 8⅝	9'- 1⅛	9'- 6	9'-10⅝	10'- 2¾	10'- 7⅜
M	5'- 0⅞	5'- 4⅜	5'- 7⅜	5'-10⅞	6'- 2	6'- 5½	6'- 9¼	7'- 0¾	7'- 3⅞	7'- 7⅜
N	0'- 3	0'- 6	0'- 3	0'- 6	0'- 3	0'- 6	0'- 3	0'- 6	0'- 3	0'- 6
P	10'- 4	10'-10⅜	11'- 3⅞	11'-10⅜	12'- 3⅞	12'-10¼	13'- 5¾	14'- 0¼	14'- 5⅝	15'- 0⅛
R	20'- 0	21'- 0	22'- 0	23'- 0	24'- 0	25'- 0	26'- 0	27'- 0	28'- 0	29'- 0
S	5'-10	6'- 2	6'- 6	6'-10	7'- 2	7'- 6	7'-10	8'- 2	8'- 6	8'-10
T	25'-10	27'- 1	28'- 3	29'- 6	30'- 8	31'-11	33'- 3	34'- 6	35'- 8	36'-11
V	4'- 4	4'- 7⅜	4'- 9⅞	5'- 1⅜	5'- 3⅞	5'- 7¼	5'-11¾	6'- 3¼	6'- 5⅝	6'- 9⅛
W	6'- 6	6'- 9⅜	7'- 0⅞	7'- 4⅜	7'- 7⅞	7'-11¼	8'- 4¾	8'- 8¼	8'-11⅝	9'- 3⅛
X	5'- 8	5'-11⅜	6'- 2⅞	6'- 6⅜	6'- 9¾	7'- 1¼	7'- 7⅞	7'-11¼	8'- 2¾	8'- 6¼

QUANTITIES		
PIPE Dia.	REINF Lbs.	CONCRETE C.Y.
90"	2180	41.3
96"	2380	45.1
102"	2785	49.0
108"	3115	53.1
114"	3645	57.3
120"	4040	61.7
126"	4640	70.7
132"	5200	75.9
138"	5665	81.0
144"	6170	86.5

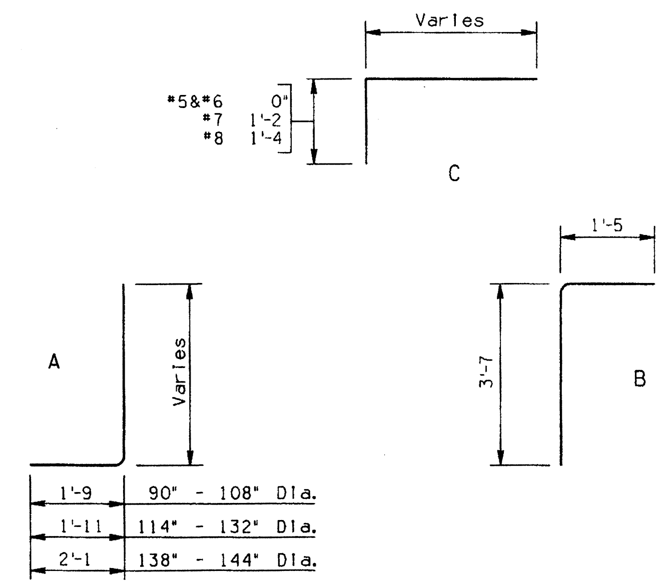

BENDS

NOTE:
Quantities and steel list shown are for one headwall.

DESIGN	K.W.	2-92	NO	DESCRIPTION OF REVISIONS	MADE BY	DATE
DRAWN	J.M.	4-92	1			
CHECKED	G.K.	4-92	2			
			3			
			4			

	DESIGN APPROVED	ARIZONA DEPARTMENT OF TRANSPORTATION HIGHWAYS DIVISION STANDARD DRAWINGS	REVISION 4-92
Registered Professional Engineer (Civil) CERTIFICATE NO. 9910 F. DANIEL DAVIS Arizona U.S.A.	APPROVED FOR DISTRIBUTION	INLET HEADWALLS 30° SKEW PIPE CULVERT 6:1 SLOPE	STANDARD NO. B-14.40

ZF1:[051020]SB1440.DGN;4 VIEW NAME:
08-MAY-1992 08:00

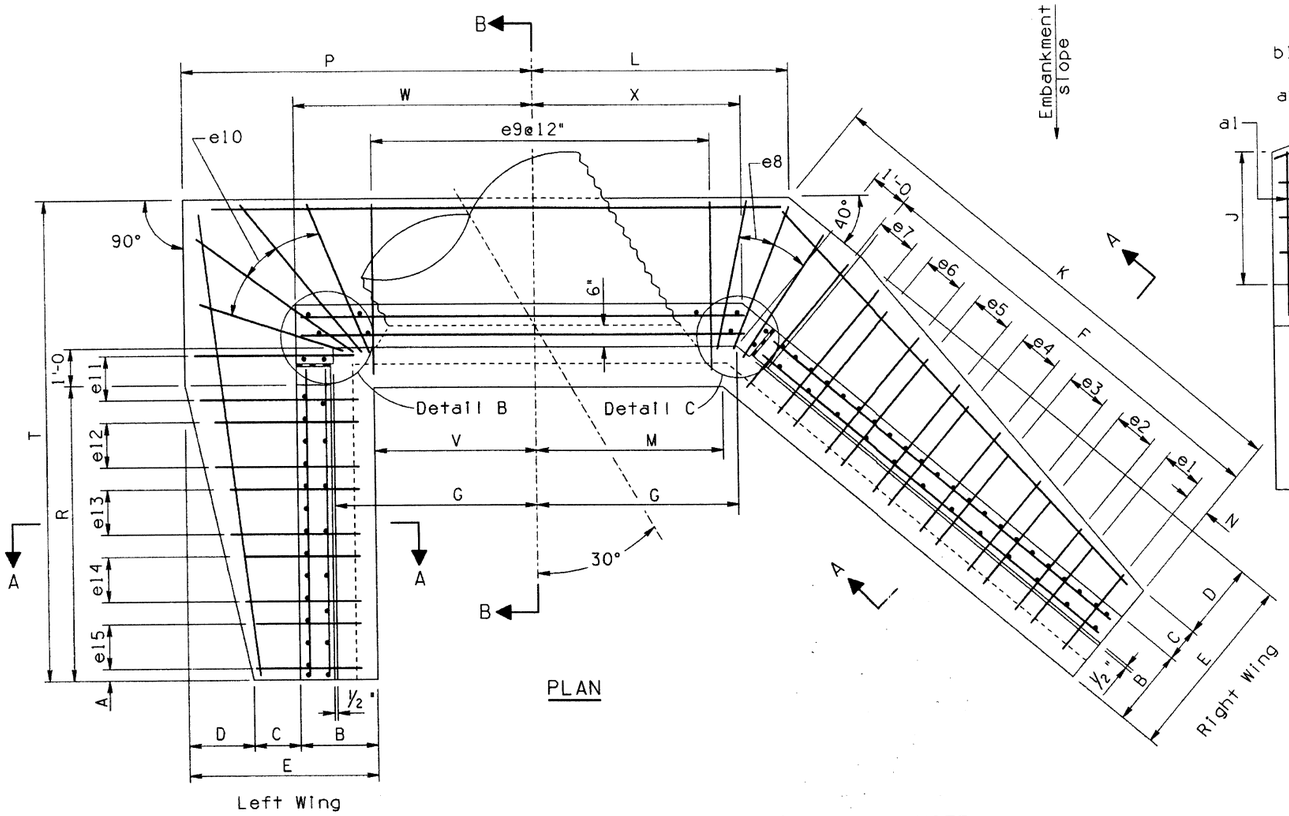

PLAN

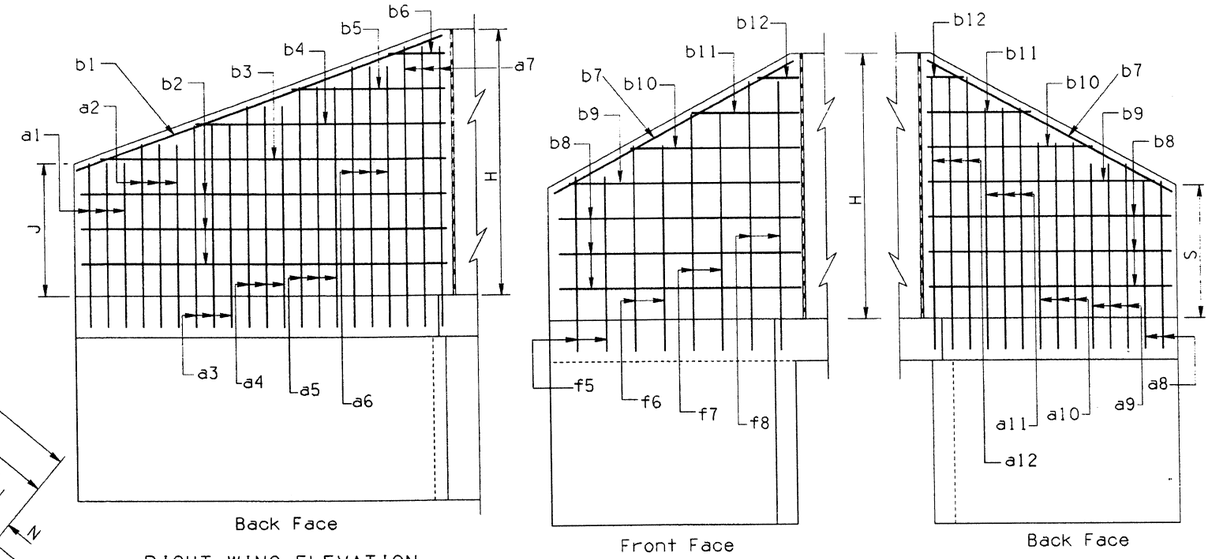

RIGHT WING ELEVATION

LEFT WING ELEVATION

NOTE:

See B-11.10 for Detail B and Detail C.

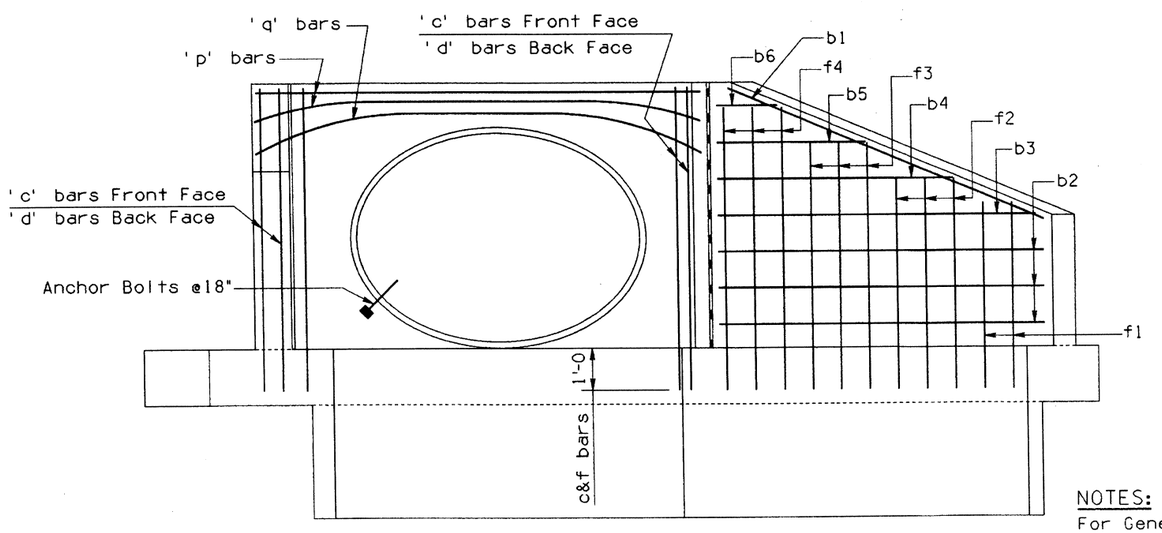

ELEVATION

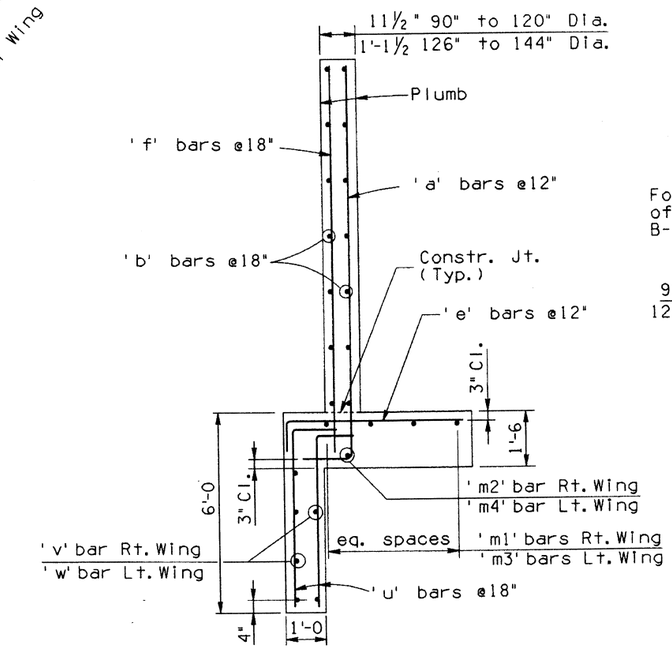

SECTION A-A

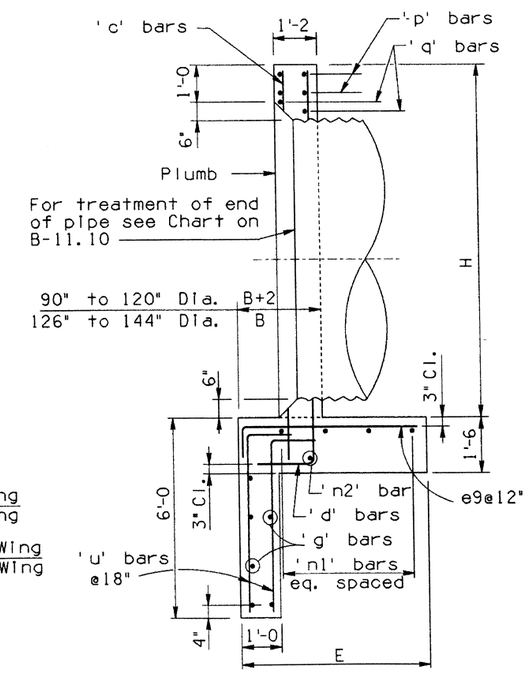

SECTION B-B

NOTES:

For General Notes and Misc. Details see B-11.10. For steel list and bend diagrams see B-14.60, B-14.70 or B-14.80.

DESIGN	K.W.	4-92
DRAWN	J.M.	4-92
CHECKED	G.K.	4-92

NO	DESCRIPTION OF REVISIONS	MADE BY	DATE
1			
2			
3			
4			

DESIGN APPROVED

APPROVED FOR DISTRIBUTION

ARIZONA
DEPARTMENT OF TRANSPORTATION
HIGHWAYS DIVISION
STANDARD DRAWINGS

OUTLET HEADWALLS
30° SKEW PIPE CULVERT

REVISION

STANDARD NO.
B-14.50

ZF1:0510201SB1450.DGN:2
08-MAY-1992 08:01
VIEW NAME:

STEEL LIST

Mark	Bend	90" Dia.			96" Dia.			102" Dia.			108" Dia.			114" Dia.			120" Dia.			126" Dia.			132" Dia.			138" Dia.			144" Dia.		
		No	Size	Lgth	No	Size	Lgth	No	Size	Lgth	No	Size	Lgth	No	Size	Lgth	No	Size	Lgth	No	Size	Lgth	No	Size	Lgth	No	Size	Lgth	No	Size	Lgth
a1	A	3	#5	6'-6	3	#5	6'-9	3	#5	6'-9	3	#5	7'-0	3	#5	7'-3	4	#5	7'-6	4	#5	7'-9	4	#5	8'-0	4	#5	8'-3	4	#5	8'-3
a2	A	3	#5	7'-6	3	#5	7'-9	3	#5	8'-0	3	#5	8'-0	3	#5	8'-6	3	#5	9'-0	4	#5	9'-3	4	#5	9'-3	4	#5	9'-6	4	#5	10'-0
a3	A	3	#5	8'-9	3	#5	9'-0	3	#5	9'-0	3	#5	9'-3	3	#5	9'-6	3	#5	10'-3	3	#5	10'-6	4	#5	10'-9	4	#5	11'-0	4	#5	11'-3
a4	A	3	#5	9'-9	3	#5	10'-0	3	#5	10'-0	3	#5	10'-3	3	#5	10'-9	3	#5	11'-3	3	#5	11'-9	3	#6	12'-0	4	#6	12'-3	4	#6	12'-9
a5	A	3	#5	11'-0	3	#5	11'-3	3	#6	11'-0	3	#6	11'-6	3	#6	11'-9	3	#6	12'-6	3	#6	12'-9	3	#7	13'-6	3	#7	13'-9	4	#7	14'-3
a6	A	2	#6	12'-0	3	#6	12'-3	2	#6	12'-0	3	#6	12'-6	3	#7	13'-0	3	#7	13'-6	3	#7	13'-9	3	#7	14'-3	3	#7	15'-0	3	#7	15'-9
a7	A							2	#7	13'-3	2	#7	13'-9	3	#7	14'-0	3	#7	14'-6	3	#7	15'-0	3	#8	15'-6	3	#8	16'-0	3	#8	16'-6
a8	A	3	#5	6'-0	3	#5	6'-3	3	#5	6'-6	3	#5	6'-9	3	#5	7'-0	3	#5	7'-3	3	#5	7'-6	3	#5	8'-0	4	#5	8'-3	4	#5	8'-6
a9	A	3	#5	7'-9	3	#5	8'-3	3	#5	8'-6	3	#5	8'-9	3	#5	8'-9	3	#5	9'-0	3	#5	9'-3	3	#5	9'-9	3	#5	10'-3	3	#5	10'-9
a10	A	3	#5	9'-6	3	#5	10'-0	3	#5	10'-3	3	#5	10'-6	3	#5	10'-6	3	#5	11'-0	3	#5	11'-0	3	#6	11'-6	3	#6	12'-0	3	#6	12'-6
a11	A	3	#6	11'-3	3	#6	11'-9	2	#6	11'-9	2	#6	12'-3	3	#6	12'-3	3	#6	12'-6	3	#6	12'-9	3	#7	13'-6	3	#7	14'-0	3	#7	14'-6
a12	A							2	#7	13'-0	2	#7	13'-3	2	#7	13'-9	2	#7	14'-3	3	#7	14'-6	3	#8	15'-0	3	#8	15'-6	3	#8	16'-0
b1	str	2	#4	16'-6	2	#4	17'-6	2	#4	18'-6	2	#4	19'-6	2	#4	20'-9	2	#4	21'-9	2	#4	22'-9	2	#4	24'-0	2	#4	25'-0	2	#4	26'-0
b2	str	4	#4	16'-0	4	#4	17'-0	6	#4	18'-0	6	#4	19'-0	6	#4	20'-0	6	#4	21'-0	6	#4	22'-0	6	#4	23'-0	6	#4	24'-0	8	#4	25'-0
b3	str	2	#4	15'-6	2	#4	16'-3	2	#4	13'-6	2	#4	15'-0	2	#4	16'-6	2	#4	18'-0	2	#4	19'-9	2	#4	20'-9	2	#4	22'-6	2	#4	19'-6
b4	str	2	#4	11'-6	2	#4	12'-0	2	#4	9'-6	2	#4	10'-9	2	#4	12'-3	2	#4	13'-9	2	#4	15'-3	2	#4	16'-6	2	#4	18'-3	2	#4	15'-3
b5	str	2	#4	7'-6	2	#4	8'-0	2	#4	5'-6	2	#4	6'-9	2	#4	7'-9	2	#4	9'-6	2	#4	11'-0	2	#4	12'-3	2	#4	13'-9	2	#4	11'-3
b6	str	2	#4	3'-6	2	#4	4'-0	2	#4	1'-6	2	#4	2'-6	2	#4	3'-6	2	#4	5'-3	2	#4	6'-9	2	#4	8'-0	2	#4	9'-6	2	#4	7'-0
b7	str	2	#4	12'-3	2	#4	12'-9	2	#4	13'-3	2	#4	14'-0	2	#4	14'-6	2	#4	15'-0	2	#4	15'-6	2	#4	16'-0	2	#4	16'-9	2	#4	17'-3
b8	str	4	#4	11'-0	4	#4	11'-6	4	#4	12'-0	6	#4	12'-6	6	#4	13'-0	6	#4	13'-6	6	#4	14'-0	6	#4	14'-6	6	#4	15'-0	8	#4	15'-6
b9	str	2	#4	9'-6	2	#4	10'-6	2	#4	11'-6	2	#4	9'-6	2	#4	10'-6	2	#4	11'-6	2	#4	12'-3	2	#4	13'-3	2	#4	14'-0	2	#4	12'-6
b10	str	2	#4	7'-0	2	#4	7'-9	2	#4	8'-9	2	#4	7'-0	2	#4	7'-9	2	#4	8'-9	2	#4	9'-6	2	#4	10'-6	2	#4	11'-3	2	#4	9'-9
b11	str	2	#4	4'-3	2	#4	5'-3	2	#4	6'-3	2	#4	4'-6	2	#4	5'-3	2	#4	6'-3	2	#4	7'-0	2	#4	8'-0	2	#4	8'-9	2	#4	7'-0
b12	str	2	#4	1'-9	2	#4	2'-6	2	#4	3'-6	2	#4	1'-9	2	#4	2'-6	2	#4	3'-6	2	#4	4'-3	2	#4	5'-3	2	#4	6'-0	2	#4	4'-3
c	str	5	#4	10'-6	5	#4	11'-0	5	#4	11'-6	5	#4	12'-0	5	#4	12'-6	5	#4	13'-0	5	#4	13'-6	5	#4	14'-0	5	#4	14'-6	5	#4	15'-0
d	A	6	#6	12'-3	6	#6	12'-9	6	#6	13'-3	6	#7	13'-9	6	#7	14'-6	6	#7	15'-0	6	#7	15'-6	6	#8	16'-0	6	#8	16'-6	6	#8	17'-0
e1	C	3	#5	3'-3	3	#5	3'-3	3	#5	3'-3	3	#5	3'-3	3	#5	3'-6	3	#5	3'-6	4	#5	3'-6	4	#5	3'-9	4	#5	3'-9	4	#5	3'-9
e2	C	3	#5	3'-9	3	#5	3'-9	3	#5	4'-0	3	#5	3'-9	3	#5	4'-3	3	#5	4'-3	3	#5	4'-3	4	#5	4'-6	4	#5	4'-6	4	#5	4'-6
e3	C	3	#5	4'-3	3	#5	4'-6	3	#5	4'-6	3	#5	4'-6	3	#5	4'-9	3	#5	4'-9	3	#5	5'-0	3	#6	5'-3	4	#6	5'-3	4	#6	5'-6
e4	C	3	#5	5'-0	3	#5	5'-0	3	#5	5'-3	3	#5	5'-0	3	#5	5'-6	3	#5	5'-6	3	#5	5'-9	3	#6	6'-0	3	#7	7'-3	4	#7	7'-6
e5	C	2	#5	5'-6	3	#5	5'-6	3	#6	5'-9	3	#6	5'-6	3	#6	6'-0	3	#6	6'-3	3	#6	6'-6	3	#7	8'-0	3	#7	8'-0	3	#7	8'-6
e6	C	2	#6	6'-0	2	#6	6'-3	3	#7	7'-9	2	#7	7'-6	3	#7	7'-6	3	#7	7'-9	3	#7	8'-0	3	#7	8'-6	3	#7	8'-6	3	#8	9'-3
e7	C										2	#7	8'-3	2	#7	8'-3	3	#8	8'-6	3	#8	9'-3	3	#8	9'-6	3	#8	10'-0	3	#8	10'-3
e8	C	2	#6	6'-3	2	#6	6'-6	2	#7	8'-0	2	#7	8'-3	2	#7	8'-6	3	#8	9'-0	3	#8	9'-6	3	#8	9'-9	3	#8	10'-3	3	#8	10'-6
e9	C	10	#6	6'-3	10	#6	6'-6	11	#7	8'-0	11	#7	8'-3	12	#7	8'-6	12	#8	9'-0	13	#8	9'-6	13	#8	9'-9	14	#8	10'-3	14	#8	10'-6
e10	C	5	#6	6'-3	5	#6	6'-6	5	#7	8'-0	6	#7	8'-3	6	#7	8'-6	6	#8	9'-0	6	#8	9'-6	7	#8	9'-9	7	#8	10'-3	7	#8	10'-6
e11	C	2	#6	6'-0	3	#6	6'-3	3	#7	7'-9	2	#7	8'-0	2	#7	8'-0	2	#7	8'-6	2	#8	9'-3	3	#8	9'-6	3	#8	10'-0	3	#8	10'-3
e12	C	3	#5	5'-0	3	#5	5'-3	3	#6	5'-6	2	#6	6'-0	2	#6	6'-3	3	#6	6'-6	3	#7	7'-6	3	#7	7'-9	3	#7	8'-3	3	#7	8'-6
e13	C	3	#5	4'-0	3	#5	4'-3	3	#5	4'-3	3	#5	5'-0	3	#5	5'-6	3	#5	5'-6	3	#6	5'-9	3	#6	5'-9	3	#6	6'-0	3	#6	6'-3
e14	C	3	#5	3'-3	3	#5	3'-3	3	#5	3'-3	3	#5	4'-3	3	#5	4'-6	3	#5	4'-6	3	#5	4'-6	3	#5	4'-9	3	#5	4'-9	3	#5	5'-0
e15	C										3	#5	3'-3	3	#5	3'-6	3	#5	3'-6	3	#5	3'-6	3	#5	3'-6	3	#5	3'-9	4	#5	3'-9
f1	str	3	#4	4'-9	3	#4	4'-9	3	#4	5'-0	4	#4	5'-3	4	#4	5'-3	4	#4	5'-6	4	#4	5'-9	4	#4	5'-9	4	#4	6'-0	5	#4	6'-3
f2	str	3	#4	6'-6	3	#4	6'-6	3	#4	5'-9	3	#4	7'-3	4	#4	7'-3	4	#4	7'-9	4	#4	8'-0	4	#4	8'-0	4	#4	8'-3	4	#4	8'-9
f3	str	3	#4	8'-0	3	#4	8'-3	3	#4	8'-6	3	#4	9'-0	3	#4	9'-6	3	#4	9'-9	4	#4	10'-0	4	#4	10'-3	4	#4	10'-9	4	#4	11'-0
f4	str	2	#4	9'-9	3	#4	10'-0	3	#4	10'-3	3	#4	11'-0	3	#4	11'-6	3	#4	12'-0	3	#4	12'-3	4	#4	12'-6	4	#4	13'-0	4	#4	13'-6
f5	str	2	#4	4'-0	2	#4	4'-3	2	#4	4'-6	3	#4	4'-9	3	#4	5'-0	3	#4	5'-3	3	#4	5'-6	3	#4	5'-9	3	#4	6'-0	3	#4	6'-3
f6	str	2	#4	5'-9	2	#4	4'-6	2	#4	6'-6	2	#4	6'-9	2	#4	7'-3	2	#4	7'-6	3	#4	7'-9	3	#4	8'-3	3	#4	8'-6	3	#4	8'-9
f7	str	2	#4	7'-9	2	#4	8'-0	2	#4	8'-6	2	#4	9'-0	2	#4	9'-3	2	#4	9'-9	2	#4	10'-3	2	#4	10'-6	2	#4	11'-0	3	#4	11'-6
f8	str	2	#4	9'-6	2	#4	10'-0	2	#4	10'-6	2	#4	11'-0	2	#4	11'-6	2	#4	12'-0	2	#4	12'-6	2	#4	13'-0	2	#4	13'-6	2	#4	14'-0
g	str	6	#4	10'-0	6	#4	10'-6	6	#4	11'-0	6	#4	11'-6	6	#4	12'-0	6	#4	12'-6	6	#4	13'-3	6	#4	13'-9	6	#4	14'-3	6	#4	14'-9
m1	str	4	#4	18'-9	4	#4	19'-9	4	#4	21'-0	5	#4	22'-0	5	#4	23'-0	5	#4	24'-3	5	#4	25'-3	6	#4	26'-6	6	#4	27'-6	6	#4	28'-9
m2	str	1	#4	18'-9	1	#4	19'-9	1	#4	21'-0	1	#4	22'-0	1	#4	23'-0	1	#4	24'-3	1	#4	25'-3	1	#4	26'-6	1	#4	27'-6	1	#4	28'-9
m3	str	4	#4	17'-0	4	#4	17'-9	4	#4	18'-6	5	#4	19'-6	5	#4	20'-3	5	#4	21'-0	5	#4	22'-0	6	#4	22'-9	6	#4	23'-6	6	#4	24'-6
m4	str	1	#4	17'-0	1	#4	17'-9	1	#4	18'-6	1	#4	19'-6	1	#4	20'-3	1	#4	21'-0	1	#4	22'-0	1	#4	22'-9	1	#4	23'-9	1	#4	24'-6
n1	str	4	#4	18'-0	4	#4	19'-0	4	#4	20'-0	5	#4	21'-0	5	#4	22'-0	5	#4	23'-0	5	#4	24'-0	6	#4	25'-0	6	#4	26'-0	6	#4	27'-0
n2	str	1	#4	18'-0	1	#4	19'-0	1	#4	20'-0	1	#4	21'-0	1	#4	22'-0	1	#4	23'-0	1	#4	24'-0	1	#4	25'-0	1	#4	26'-0	1	#4	27'-0
p	str	4	#5	12'-0	4	#5	12'-6	4	#5	13'-0	4	#5	13'-9	4	#5	14'-3	4	#5	14'-9	4	#5	15'-6	4	#5	16'-3	4	#5	17'-0	4	#5	17'-6
q	str	2	#6	14'-0	2	#6	14'-6	2	#6	15'-0	2	#6	15'-6	2	#6	16'-3	2	#6	16'-9	2	#6	17'-6	2	#6	18'-3	2	#6	19'-0	2	#6	19'-6
u	B	50	#4	7'-0	52	#4	7'-0	56	#4	7'-0	58	#4	7'-0	60	#4	7'-0	64	#4	7'-0	66	#4	7'-0	68	#4	7'-0	72	#4	7'-0	74	#4	7'-0
v	str	6	#4	16'-0	6	#4	17'-0	6	#4	18'-0	6	#4	19'-0	6	#4	20'-0	6	#4	21'-0	6	#4	22'-0	6	#4	23'-0	6	#4	24'-0	6	#4	25'-0
w	str	6	#4	11'-0	6	#4	11'-6	6	#4	12'-0	6	#4	12'-6	6	#4	13'-0	6	#4	13'-6	6	#4	14'-0	6	#4	14'-6	6	#4	15'-0	6	#4	15'-6

Pipe Diameter

	90"	96"	102"	108"	114"	120"	126"	132"	138"	144"
A	0'- 3	0'- 6	0'- 3	0'- 6	0'- 3	0'- 6	0'- 3	0'- 6	0'- 3	0'- 6
B	2'- 2	2'- 2	2'- 3	2'- 3	2'- 4	2'- 4	2'- 5	2'- 5	2'- 6	2'- 6
C	1'- 4	1'- 4	1'- 4	1'- 5	1'- 5	1'- 5	1'- 5	1'- 6	1'- 6	1'- 6
D	3'- 0	3'- 4	3'- 7	3'-10	4'- 1	4'- 5	4'- 8	4'-11	5'- 2	5'- 6
E	6'- 6	6'-10	7'- 2	7'- 6	7'-10	8'- 2	8'- 6	8'-10	9'- 2	9'- 6
F	16'- 0	17'- 0	18'- 0	19'- 0	20'- 0	21'- 0	22'- 0	23'- 0	24'- 0	25'- 0
G	5'- 6	5'- 9 3/8	6'- 0 7/8	6'- 4 3/8	6'- 7 7/8	6'-11 1/4	7'- 2 3/4	7'- 6 1/4	7'- 9 5/8	8'- 1 1/8
H	9'- 6	10'- 0	10'- 6	11'- 0	11'- 6	12'- 0	12'- 6	13'- 0	13'- 6	14'- 0
J	3'- 8	3'-10	4'- 0	4'- 2	4'- 4	4'- 6	4'- 8	4'-10	5'- 0	5'- 2
K	18'-11 1/4	20'- 0 3/4	21'- 1 7/8	22'- 3 1/4	23'- 4 3/8	24'- 5 7/8	25'- 7 5/8	26'- 9 1/8	27'-10 1/4	28'-11 5/8
L	7'- 5 1/4	7'-10 1/8	8'- 2 3/4	8'- 7 5/8	9'- 0 1/4	9'- 5 1/8	9'-10 3/8	10'- 3 3/8	10'- 7 7/8	11'- 0 3/4
M	5'- 0 7/8	5'- 4 3/8	5'- 7 3/8	5'-10 7/8	6'- 2	6'- 5 1/2	6'- 9 1/4	7'- 0 3/4	7'- 3 7/8	7'- 7 3/8
N	0'- 3	0'- 3	0'- 3	0'- 3	0'- 3	0'- 3	0'- 3	0'- 3	0'- 3	0'- 3
P	10'-10	11'- 5 3/8	11'-11 7/8	12'- 7 3/8	13'- 1 7/8	13'- 9 1/4	14'- 5 3/4	15'- 1 1/4	15'- 7 5/8	16'- 3 1/8
R	11'- 0	11'- 6	12'- 0	12'- 6	13'- 0	13'- 6	14'- 0	14'- 6	15'- 0	15'- 6
S	3'- 0	3'- 3	3'- 6	3'- 9	4'- 0	4'- 3	4'- 6	4'- 9	5'- 0	5'- 3
T	17'- 4	18'- 2	18'-11	19'- 9	20'- 6	21'- 4	22'- 3	23'- 1	23'-10	24'- 8
V	4'- 4	4'- 7 3/8	4'- 9 7/8	5'- 1 3/8	5'- 3 7/8	5'- 7 1/4	5'-11 3/4	6'- 3 1/4	6'- 5 5/8	6'- 9 1/8
W	6'- 6	6'- 9 3/8	7'- 0 7/8	7'- 4 3/8	7'- 7 7/8	7'-11 1/4	8'- 4 3/4	8'- 8 1/4	8'-11 5/8	9'- 3 1/8
X	5'- 8	5'-11 3/8	6'- 2 7/8	6'- 6 3/8	6'- 9 3/4	7'- 1 1/4	7'- 7 1/8	7'-11 1/4	8'- 2 3/4	8'- 6 1/4

QUANTITIES

PIPE DIA	REINF lbs	CONCRETE C.Y.
90"	1670	30.1
96"	1780	32.8
102"	2140	35.6
108"	2400	38.6
114"	2570	41.6
120"	2885	44.7
126"	3125	50.2
132"	3595	53.9
138"	4110	57.5
144"	4060	61.2

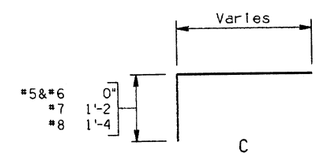

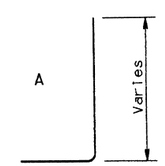

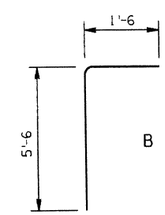

1'-9	90" - 108" Dia.
1'-11	114" - 132" Dia.
2'-1	138" - 144" Dia.

BENDS

NOTE:
Quantities and steel list shown are for one headwall.

DESIGN APPROVED	ARIZONA DEPARTMENT OF TRANSPORTATION HIGHWAYS DIVISION STANDARD DRAWINGS	REVISION
APPROVED FOR DISTRIBUTION	OUTLET HEADWALLS 30° SKEW PIPE CULVERT 2:1 SLOPE	STANDARD NO. B-14.60

DESIGN	K.W.	2-92
DRAWN	J.M.	4-92
CHECKED	G.K.	4-92

NO	DESCRIPTION OF REVISIONS	MADE BY	DATE
1			
2			
3			
4			

ZFL(051020)SB1460.DGN;2 VIEW NAME:
08-MAY-1992 08:04

STEEL LIST

Mark	Bend	90" Dia.			96" Dia.			102" Dia.			108" Dia.			114" Dia.			120" Dia.			126" Dia.			132" Dia.			138" Dia.			144" Dia.		
		No	Size	Lgth	No	Size	Lgth	No	Size	Lgth	No	Size	Lgth	No	Size	Lgth	No	Size	Lgth	No	Size	Lgth	No	Size	Lgth	No	Size	Lgth	No	Size	Lgth
a1	A	4	#5	7'-9	4	#5	8'-3	5	#5	8'-6	5	#5	8'-9	5	#5	9'-3	5	#5	9'-9	5	#5	10'-0	5	#5	10'-3	5	#5	10'-9	6	#5	11'-3
a2	A	4	#5	8'-6	4	#5	9'-0	4	#5	9'-3	5	#5	9'-6	5	#5	10'-0	5	#5	10'-6	5	#5	10'-9	5	#5	11'-3	5	#6	11'-6	5	#6	12'-0
a3	A	4	#5	9'-3	4	#5	9'-6	4	#5	10'-0	4	#5	10'-3	5	#5	11'-0	5	#6	11'-3	5	#6	11'-6	5	#6	12'-0	5	#6	12'-6	5	#7	13'-0
a4	A	4	#5	10'-0	4	#5	10'-3	4	#5	10'-6	4	#5	11'-0	4	#6	11'-9	5	#6	12'-0	5	#7	12'-6	5	#7	12'-9	5	#7	13'-3	5	#7	13'-9
a5	A	4	#5	10'-9	4	#5	11'-0	4	#6	11'-3	4	#6	11'-9	4	#7	12'-6	4	#7	13'-0	5	#7	13'-3	5	#7	13'-9	5	#7	14'-3	5	#8	14'-9
a6	A	4	#5	11'-6	4	#6	11'-9	4	#6	12'-0	4	#7	12'-6	4	#7	13'-6	4	#7	13'-9	4	#7	14'-3	5	#8	14'-6	5	#8	15'-0	5	#8	15'-6
a7	A	3	#6	12'-3	4	#6	12'-6	4	#7	12'-9	4	#7	13'-3	4	#7	14'-3	4	#7	14'-6	4	#8	15'-0	4	#8	15'-6	5	#8	16'-0	5	#8	16'-6
a8	A	4	#5	8'-0	4	#5	8'-3	4	#5	8'-6	4	#5	8'-9	5	#5	9'-3	5	#5	9'-6	5	#5	9'-9	5	#5	10'-0	5	#5	10'-6	6	#5	10'-9
a9	A	4	#5	9'-0	4	#5	9'-3	4	#5	9'-6	4	#5	9'-9	4	#5	10'-6	5	#5	10'-9	5	#5	11'-0	5	#6	11'-3	5	#6	11'-9	5	#6	12'-3
a10	A	3	#5	10'-0	4	#5	10'-3	4	#5	10'-9	4	#5	11'-0	4	#6	11'-6	4	#6	12'-0	5	#6	12'-3	5	#7	12'-6	5	#7	13'-0	5	#7	13'-9
a11	A	3	#5	11'-0	3	#6	11'-6	4	#6	11'-9	4	#6	12'-3	4	#7	12'-9	4	#7	13'-3	4	#7	13'-6	5	#7	14'-0	5	#7	14'-6	5	#8	15'-0
a12	A	3	#6	11'-9	3	#6	12'-6	3	#7	12'-9	4	#7	13'-3	4	#7	14'-0	4	#7	14'-6	4	#7	14'-9	4	#7	15'-3	5	#8	15'-9	5	#8	16'-6
b1	str	2	#4	26'-6	2	#4	27'-6	2	#4	28'-6	2	#4	29'-6	2	#4	30'-6	2	#4	31'-6	2	#4	32'-6	2	#4	33'-6	2	#4	34'-6	2	#4	35'-6
b2	str	6	#4	26'-0	6	#4	27'-0	8	#4	28'-0	8	#4	29'-0	8	#4	30'-0	8	#4	31'-0	10	#4	32'-0	10	#4	33'-0	10	#4	34'-0	10	#4	35'-0
b3	str	2	#4	23'-6	2	#4	26'-0	2	#4	20'-6	2	#4	24'-0	2	#4	25'-6	2	#4	29'-0	2	#4	23'-6	2	#4	26'-6	2	#4	29'-6	2	#4	32'-0
b4	str	2	#4	14'-6	2	#4	17'-3	2	#4	11'-6	2	#4	15'-3	2	#4	17'-0	2	#4	20'-3	2	#4	14'-6	2	#4	17'-6	2	#4	20'-6	2	#4	23'-3
b5	str	2	#4	5'-6	2	#4	8'-6	2	#4	3'-0	2	#4	6'-6	2	#4	8'-6	2	#4	11'-3	2	#4	5'-6	2	#4	8'-6	2	#4	11'-6	2	#4	14'-9
b6	str																2	#4	2'-6							2	#4	2'-6	2	#4	6'-0
b7	str	2	#4	16'-6	2	#4	17'-6	2	#4	18'-6	2	#4	19'-6	2	#4	20'-6	2	#4	21'-6	2	#4	22'-6	2	#4	23'-6	2	#4	24'-6	2	#4	25'-6
b8	str	6	#4	16'-0	8	#4	17'-0	8	#4	18'-0	8	#4	19'-0	8	#4	20'-0	8	#4	21'-0	8	#4	22'-0	8	#4	23'-0	10	#4	24'-0	10	#4	25'-0
b9	str	2	#4	14'-9	2	#4	11'-6	2	#4	13'-0	2	#4	15'-6	2	#4	17'-3	2	#4	19'-6	2	#4	20'-6	2	#4	22'-6	2	#4	19'-0	2	#4	21'-6
b10	str	2	#4	9'-0	2	#4	5'-6	2	#4	7'-6	2	#4	10'-0	2	#4	11'-3	2	#4	13'-6	2	#4	14'-9	2	#4	16'-9	2	#4	13'-3	2	#4	15'-9
b11	str	2	#4	3'-6				2	#4	2'-0	2	#4	4'-6	2	#4	5'-6	2	#4	7'-6	2	#4	9'-3	2	#4	11'-0	2	#4	7'-9	2	#4	10'-0
b12	str																2	#4	2'-0	2	#4	3'-6	2	#4	5'-3	2	#4	2'-0	2	#4	4'-3
c	str	5	#4	10'-6	5	#4	11'-0	5	#4	11'-6	5	#4	12'-0	5	#4	12'-6	5	#4	13'-0	5	#4	13'-6	5	#4	14'-0	5	#4	14'-6	5	#4	15'-0
d	A	6	#6	12'-3	6	#6	12'-9	6	#7	13'-3	6	#7	13'-9	6	#7	14'-6	6	#7	15'-0	6	#8	15'-6	6	#8	16'-0	6	#8	16'-6	6	#8	17'-0
e1	C	4	#5	3'-6	4	#5	3'-9	5	#5	3'-9	5	#5	4'-0	5	#5	4'-0	5	#5	4'-3	5	#5	4'-3	5	#5	4'-6	5	#5	4'-6	5	#5	4'-9
e2	C	4	#5	3'-9	4	#5	4'-0	4	#5	4'-0	5	#5	4'-6	5	#5	4'-6	5	#5	4'-9	5	#5	4'-9	5	#5	5'-0	5	#6	5'-0	5	#6	5'-3
e3	C	4	#5	4'-3	4	#5	4'-6	4	#5	4'-6	4	#5	4'-9	4	#5	5'-0	5	#5	5'-3	5	#6	5'-3	5	#6	5'-6	5	#6	5'-6	5	#6	5'-9
e4	C	4	#5	4'-6	4	#5	4'-9	4	#5	5'-0	4	#5	5'-3	4	#5	5'-3	4	#6	5'-6	5	#6	5'-9	5	#6	6'-0	5	#7	7'-0	5	#7	7'-6
e5	C	4	#5	4'-9	4	#5	5'-0	4	#5	5'-3	4	#5	5'-6	4	#6	5'-9	4	#6	6'-0	4	#7	7'-6	5	#7	7'-6	5	#7	7'-9	5	#7	8'-0
e6	C	4	#5	5'-3	4	#5	5'-6	4	#5	5'-9	4	#6	6'-0	4	#6	6'-3	4	#7	7'-6	4	#7	7'-9	4	#7	8'-0	5	#7	8'-3	5	#8	8'-6
e7	C	3	#5	5'-6	4	#6	5'-9	4	#6	6'-0	4	#6	6'-6	4	#7	7'-9	4	#7	8'-0	4	#7	8'-3	4	#7	8'-6	4	#8	9'-0	5	#8	9'-3
e8	C	2	#5	5'-9	2	#6	6'-0	2	#6	6'-3	2	#6	6'-9	3	#7	8'-0	3	#7	8'-3	3	#7	8'-9	3	#7	9'-0	3	#8	9'-6	3	#8	9'-9
e9	C	9	#5	5'-9	10	#6	6'-0	10	#6	6'-3	11	#6	6'-9	11	#7	8'-0	12	#7	8'-3	12	#7	8'-9	13	#7	9'-0	13	#8	9'-6	14	#8	9'-9
e10	C	5	#5	5'-9	5	#6	6'-0	5	#6	6'-3	6	#6	6'-9	6	#7	8'-0	6	#7	8'-3	6	#7	8'-9	7	#7	9'-0	7	#8	9'-6	7	#8	9'-9
e11	C	4	#5	5'-6	4	#6	5'-9	4	#6	6'-0	4	#6	6'-6	4	#6	6'-9	5	#7	7'-9	5	#7	8'-0	5	#7	8'-3	5	#7	8'-6	5	#7	9'-0
e12	C	3	#5	5'-0	4	#5	5'-3	4	#5	5'-6	4	#5	5'-9	4	#5	6'-0	4	#6	6'-3	5	#6	6'-6	5	#6	6'-6	5	#7	7'-9	5	#7	8'-0
e13	C	3	#5	4'-6	3	#5	4'-9	4	#5	4'-9	4	#5	5'-3	4	#5	5'-3	4	#5	5'-6	4	#5	5'-9	5	#5	6'-0	5	#6	6'-0	5	#6	6'-3
e14	C	3	#5	4'-0	3	#5	4'-3	3	#5	4'-3	4	#5	4'-6	4	#5	4'-6	4	#5	4'-9	4	#5	5'-0	4	#5	5'-3	5	#5	5'-3	5	#5	5'-6
e15	C	3	#5	3'-6	3	#5	3'-9	3	#5	3'-9	3	#5	4'-0	4	#5	4'-0	4	#5	4'-3	4	#5	4'-3	4	#5	4'-6	4	#5	4'-6	5	#5	4'-9
f1	str	5	#4	6'-3	5	#4	6'-6	5	#4	6'-9	5	#4	7'-0	5	#4	7'-6	6	#4	7'-9	6	#4	8'-0	6	#4	8'-6	6	#4	8'-9	6	#4	9'-0
f2	str	5	#4	7'-6	5	#4	7'-9	5	#4	8'-0	5	#4	8'-3	5	#4	8'-9	5	#4	9'-3	6	#4	9'-6	6	#4	10'-0	6	#4	10'-3	6	#4	10'-6
f3	str	4	#4	8'-9	4	#4	9'-0	5	#4	9'-3	5	#4	9'-9	5	#4	10'-3	5	#4	10'-6	5	#4	11'-0	5	#4	11'-6	6	#4	12'-0	6	#4	12'-3
f4	str	4	#4	9'-9	4	#4	10'-3	4	#4	10'-6	5	#4	11'-0	5	#4	11'-6	5	#4	12'-0	5	#4	12'-6	5	#4	13'-0	5	#4	13'-6	6	#4	13'-9
f5	str	3	#4	6'-6	3	#4	6'-9	3	#4	7'-0	4	#4	7'-3	4	#4	7'-6	4	#4	7'-9	4	#4	8'-0	4	#4	8'-3	4	#4	8'-6	5	#4	8'-9
f6	str	3	#4	7'-9	3	#4	8'-0	3	#4	8'-3	3	#4	8'-6	4	#4	9'-0	4	#4	9'-3	4	#4	9'-6	4	#4	9'-9	4	#4	10'-0	4	#4	10'-6
f7	str	3	#4	8'-9	3	#4	9'-0	3	#4	9'-6	3	#4	10'-0	3	#4	10'-3	3	#4	10'-6	4	#4	11'-3	4	#4	11'-6	4	#4	11'-9	4	#4	12'-3
f8	str	2	#4	10'-0	3	#4	10'-3	3	#4	10'-9	3	#4	11'-3	3	#4	11'-9	3	#4	12'-0	3	#4	12'-9	4	#4	13'-0	4	#4	13'-3	4	#4	14'-0
g	str	6	#4	10'-0	6	#4	10'-6	6	#4	11'-0	6	#4	11'-6	6	#4	12'-0	6	#4	12'-6	6	#4	13'-3	6	#4	13'-9	6	#4	14'-3	6	#4	14'-9
m1	str	4	#4	28'-6	4	#4	29'-9	4	#4	30'-9	5	#4	31'-9	5	#4	33'-0	5	#4	34'-0	5	#4	35'-0	6	#4	36'-3	6	#4	37'-3	6	#4	38'-6
m2	str	1	#4	28'-6	1	#4	29'-9	1	#4	30'-9	1	#4	31'-9	1	#4	33'-0	1	#4	34'-0	1	#4	35'-0	1	#4	36'-3	1	#4	37'-3	1	#4	38'-6
m3	str	4	#4	21'-9	4	#4	23'-0	4	#4	24'-3	5	#4	25'-6	5	#4	26'-9	5	#4	28'-0	5	#4	29'-6	6	#4	30'-9	6	#4	32'-0	6	#4	33'-3
m4	str	1	#4	21'-9	1	#4	23'-0	1	#4	24'-3	1	#4	25'-6	1	#4	26'-9	1	#4	28'-0	1	#4	29'-6	1	#4	30'-9	1	#4	32'-0	1	#4	33'-3
n1	str	4	#4	17'-6	4	#4	18'-6	4	#4	19'-3	5	#4	20'-3	5	#4	21'-0	5	#4	22'-0	5	#4	23'-3	6	#4	24'-0	6	#4	25'-0	6	#4	26'-0
n2	str	1	#4	17'-6	1	#4	18'-6	1	#4	19'-3	1	#4	20'-3	1	#4	21'-0	1	#4	22'-0	1	#4	23'-3	1	#4	24'-0	1	#4	25'-0	1	#4	26'-0
p	str	4	#5	12'-0	4	#5	12'-6	4	#5	13'-0	4	#5	13'-9	4	#5	14'-3	4	#5	15'-0	4	#5	15'-6	4	#5	16'-3	4	#5	17'-0	4	#5	17'-6
q	str	2	#6	14'-0	2	#6	14'-6	2	#6	15'-0	2	#6	15'-9	2	#6	16'-3	2	#6	17'-0	2	#6	17'-6	2	#6	18'-3	2	#6	19'-0	2	#6	19'-6
u	B	72	#4	7'-0	76	#4	7'-0	78	#4	7'-0	82	#4	7'-0	86	#4	7'-0	88	#4	7'-0	92	#4	7'-0	96	#4	7'-0	98	#4	7'-0	102	#4	7'-0
v	str	6	#4	26'-6	6	#4	27'-6	6	#4	28'-6	6	#4	29'-6	6	#4	30'-6	6	#4	31'-6	6	#4	32'-6	6	#4	33'-6	6	#4	34'-6	6	#4	35'-6
w	str	6	#4	16'-0	6	#4	17'-0	6	#4	18'-0	6	#4	19'-0	6	#4	20'-0	6	#4	21'-0	6	#4	22'-0	6	#4	23'-0	6	#4	24'-0	6	#4	25'-0

Pipe Diameter

	90"	96"	102"	108"	114"	120"	126"	132"	138"	144"
A	0'- 3	0'- 3	0'- 3	0'- 3	0'- 3	0'- 3	0'- 3	0'- 3	0'- 3	0'- 3
B	2'- 2	2'- 2	2'- 3	2'- 3	2'- 4	2'- 4	2'- 5	2'- 5	2'- 6	2'- 6
C	1'- 9	1'-10	1'-11	2'- 0	2'- 1	2'- 2	2'- 3	2'- 4	2'- 5	2'- 6
D	2'- 4	2'- 6	2'- 8	2'-10	3'- 0	3'- 2	3'- 4	3'- 6	3'- 8	3'-10
E	6'- 3	6'- 6	6'-10	7'- 1	7'- 5	7'- 8	8'- 0	8'- 3	8'- 7	8'-10
F	26'- 0	27'- 0	28'- 0	29'- 0	30'- 0	31'- 0	32'- 0	33'- 0	34'- 0	35'- 0
G	5'- 6	5'- 9 3/8	6'- 0 7/8	6'- 4 3/8	6'- 7 7/8	6'-11 1/4	7'- 2 3/4	7'- 6 1/4	7'- 9 5/8	8'- 1 1/8
H	9'- 6	10'- 0	10'- 6	11'- 0	11'- 6	12'- 0	12'- 6	13'- 0	13'- 6	14'- 0
J	5'- 0	5'- 4	5'- 8	6'- 0	6'- 4	6'- 8	7'- 0	7'- 4	7'- 8	8'- 0
K	28'-10 1/4	29'-11 1/4	31'- 0 3/8	32'- 1 1/2	33'- 2 5/8	34'- 3 5/8	35'- 5 1/2	36'- 6 5/8	37'- 7 5/8	38'- 8 3/4
L	7'- 4 1/8	7'- 8 3/4	8'- 1 1/4	8'- 5 7/8	8'-10 3/8	9'- 3	9'- 8 1/4	10'- 0 3/4	10'- 5 3/8	10'- 9 7/8
M	5'- 0 7/8	5'- 4 3/8	5'- 7 3/8	5'-10 7/8	6'- 2	6'- 5 1/2	6'- 9 1/4	7'- 0 3/4	7'- 3 7/8	7'- 7 3/8
N	0'- 3	0'- 3	0'- 3	0'- 3	0'- 3	0'- 3	0'- 3	0'- 3	0'- 3	0'- 3
P	10'- 7	11'- 1 3/8	11'- 7 7/8	12'- 2 3/8	12'- 8 7/8	13'- 3 1/4	13'-11 3/4	14'- 6 1/4	15'- 0 5/8	15'- 7 1/8
R	16'- 0	17'- 0	18'- 0	19'- 0	20'- 0	21'- 0	22'- 0	23'- 0	24'- 0	25'- 0
S	5'- 3	5'- 6	5'- 9	6'- 0	6'- 3	6'- 6	6'- 9	7'- 0	7'- 3	7'- 6
T	22'- 1	23'- 4	24'- 7	25'-10	27'- 1	28'- 4	29'- 9	31'- 0	32'- 3	33'- 6
V	4'- 4	4'- 7 3/8	4'- 9 7/8	5'- 1 3/8	5'- 3 7/8	5'- 7 1/4	5'-11 3/4	6'- 3 1/4	6'- 5 5/8	6'- 9 1/8
W	6'- 6	6'- 9 3/8	7'- 0 7/8	7'- 4 3/8	7'- 7 7/8	7'-11 1/4	8'- 4 3/4	8'- 8 1/4	8'-11 5/8	9'- 3 1/8
X	5'- 8	5'-11 3/8	6'- 2 7/8	6'- 6 3/8	6'- 9 3/4	7'- 1 1/4	7'- 7 7/8	7'-11 1/4	8'- 2 3/4	8'- 6 1/4

QUANTITIES

PIPE Dia.	REINF Lbs.	CONCRETE C.Y.
90"	2270	41.2
96"	2550	44.7
102"	2810	48.0
108"	3135	52.1
114"	3580	56.1
120"	3890	60.0
126"	4300	68.3
132"	4755	72.4
138"	5365	77.2
144"	5830	81.9

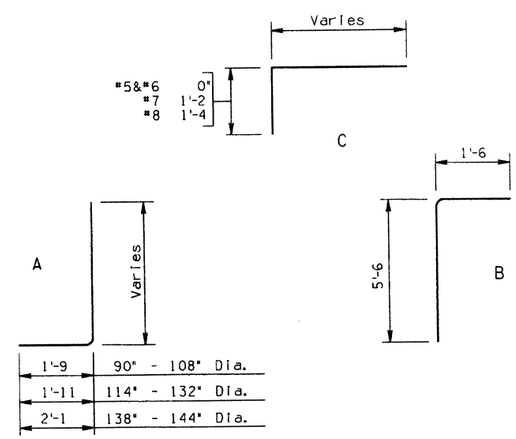

BENDS

NOTE:
Quantities and steel list shown are for one headwall.

DESIGN	K. M.	2-92
DRAWN	G. H.	4-92
CHECKED	G. H.	4-92

NO	DESCRIPTION OF REVISIONS	MADE BY	DATE
1			
2			
3			
4			

DESIGN APPROVED

APPROVED FOR DISTRIBUTION

ARIZONA
DEPARTMENT OF TRANSPORTATION
HIGHWAYS DIVISION
STANDARD DRAWINGS

OUTLET HEADWALLS
30° SKEW PIPE CULVERT
4:1 SLOPE

REVISION

STANDARD NO.
B-14.70

ZF1:0510203SB1470.DGN;1 VIEW NAME: BR
08-MAY-1992 08:04

STEEL LIST

Mark	Bend	90" Dia. No	90" Size	90" Lgth	96" Dia. No	96" Size	96" Lgth	102" Dia. No	102" Size	102" Lgth	108" Dia. No	108" Size	108" Lgth	114" Dia. No	114" Size	114" Lgth	120" Dia. No	120" Size	120" Lgth	126" Dia. No	126" Size	126" Lgth	132" Dia. No	132" Size	132" Lgth	138" Dia. No	138" Size	138" Lgth	144" Dia. No	144" Size	144" Lgth
a1	A	5	#5	8'-6	5	#5	9'-0	6	#5	9'-3	6	#5	9'-6	6	#5	10'-3	6	#5	10'-6	6	#5	10'-9	7	#6	11'-3	7	#6	11'-9	7	#6	12'-0
a2	A	5	#5	9'-0	5	#5	9'-6	5	#5	9'-9	6	#5	10'-3	6	#5	10'-9	6	#5	11'-3	6	#6	11'-6	6	#6	12'-0	7	#6	12'-6	7	#7	12'-9
a3	A	5	#5	9'-9	5	#5	10'-3	5	#5	10'-6	5	#5	11'-0	6	#6	11'-6	6	#6	11'-9	6	#6	12'-3	6	#7	12'-6	7	#7	13'-3	7	#7	13'-6
a4	A	5	#5	10'-3	5	#5	10'-9	5	#5	11'-0	5	#6	11'-6	6	#6	12'-0	6	#7	12'-6	6	#7	12'-9	6	#7	13'-3	6	#7	14'-0	7	#7	14'-3
a5	A	5	#5	10'-9	5	#6	11'-3	5	#6	11'-6	5	#6	12'-3	5	#7	12'-9	6	#7	13'-3	6	#7	13'-6	6	#7	14'-0	6	#8	14'-9	6	#8	15'-0
a6	A	4	#6	11'-6	5	#6	12'-0	5	#6	12'-3	5	#7	12'-9	5	#7	13'-6	5	#7	14'-0	6	#7	14'-3	6	#8	14'-9	6	#8	15'-6	6	#8	15'-9
a7	A	4	#6	12'-0	4	#6	12'-6	5	#7	12'-9	5	#7	13'-6	5	#7	14'-0	5	#7	14'-9	6	#8	15'-0	6	#8	15'-6	6	#8	16'-3	6	#8	16'-6
a8	A	5	#5	8'-6	5	#5	9'-0	5	#5	9'-3	5	#5	9'-6	5	#5	10'-3	6	#5	10'-6	6	#5	10'-9	6	#6	11'-3	6	#6	11'-9	6	#6	12'-0
a9	A	4	#5	9'-3	5	#5	9'-9	5	#5	10'-3	5	#5	10'-6	5	#5	11'-0	5	#6	11'-6	6	#6	11'-9	6	#6	12'-3	6	#7	12'-9	6	#7	13'-0
a10	A	4	#5	10'-3	4	#5	10'-9	5	#6	11'-3	5	#6	11'-6	5	#6	12'-0	5	#6	12'-6	5	#7	12'-9	6	#7	13'-3	6	#7	14'-0	6	#7	14'-3
a11	A	4	#5	11'-3	4	#6	11'-6	4	#6	12'-0	5	#7	12'-3	5	#7	13'-0	5	#7	13'-9	5	#7	14'-0	5	#8	14'-3	6	#8	15'-0	6	#8	15'-3
a12	A	4	#6	12'-0	4	#6	12'-6	4	#7	13'-0	4	#7	13'-3	5	#7	14'-0	5	#7	14'-9	5	#8	15'-0	5	#8	15'-6	5	#8	16'-3	6	#8	16'-6
b1	str	2	#4	32'-3	2	#4	33'-9	2	#4	35'-3	2	#4	36'-9	2	#4	38'-3	2	#4	39'-9	2	#4	41'-3	2	#4	42'-9	2	#4	44'-3	2	#4	45'-9
b2	str	8	#4	32'-0	8	#4	33'-6	8	#4	35'-0	8	#4	36'-6	10	#4	38'-0	10	#4	39'-6	10	#4	41'-0	10	#4	42'-6	10	#4	44'-0	12	#4	45'-6
b3	str	2	#4	22'-0	2	#4	26'-0	2	#4	30'-0	2	#4	35'-0	2	#4	26'-0	2	#4	28'-6	2	#4	32'-6	2	#4	38'-6	2	#4	43'-0	2	#4	35'-0
b4	str	2	#4	8'-0	2	#4	12'-6	2	#4	17'-0	2	#4	22'-6	2	#4	11'-6	2	#4	16'-0	2	#4	19'-9	2	#4	25'-3	2	#4	30'-0	2	#4	22'-0
b5	str							2	#4	4'-0	2	#4	10'-0				2	#4	3'-6	2	#4	7'-0	2	#4	12'-0	2	#4	17'-0	2	#4	9'-0
b6	str																									2	#4	4'-0			
b7	str	2	#4	20'-3	2	#4	21'-3	2	#4	22'-3	2	#4	23'-3	2	#4	24'-3	2	#4	25'-3	2	#4	26'-3	2	#4	27'-3	2	#4	28'-3	2	#4	29'-3
b8	str	8	#4	20'-0	8	#4	21'-0	8	#4	22'-0	8	#4	23'-0	10	#4	24'-0	10	#4	25'-0	10	#4	26'-0	10	#4	27'-0	10	#4	28'-0	12	#4	29'-0
b9	str	2	#4	13'-6	2	#4	16'-0	2	#4	19'-3	2	#4	21'-0	2	#4	15'-6	2	#4	19'-3	2	#4	22'-0	2	#4	25'-0	2	#4	27'-6	2	#4	22'-0
b10	str	2	#4	6'-0	2	#4	8'-6	2	#4	11'-0	2	#4	13'-3	2	#4	8'-0	2	#4	10'-9	2	#4	13'-6	2	#4	16'-6	2	#4	19'-3	2	#4	14'-0
b11	str							2	#4	2'-9	2	#4	5'-6				2	#4	2'-6	2	#4	5'-0	2	#4	8'-0	2	#4	10'-9	2	#4	6'-0
b12	str																									2	#4	2'-6			
c	str	5	#4	10'-6	5	#4	11'-0	5	#4	11'-6	5	#4	12'-0	5	#4	12'-6	5	#4	13'-0	5	#4	13'-6	5	#4	14'-0	5	#4	14'-6	5	#4	15'-0
d	A	6	#6	12'-3	6	#6	12'-9	6	#7	13'-3	6	#7	13'-9	6	#7	14'-6	6	#7	15'-0	6	#8	15'-6	6	#8	16'-0	6	#8	16'-6	6	#8	17'-0
e1	C	7	#5	4'-3	6	#5	4'-3	6	#5	4'-6	7	#5	4'-9	6	#5	4'-9	6	#5	5'-0	6	#5	5'-3	7	#5	5'-6	7	#5	5'-6	7	#5	5'-9
e2	C	7	#5	4'-6	6	#5	4'-6	6	#5	4'-9	6	#5	5'-0	6	#5	5'-0	6	#5	5'-3	6	#5	5'-6	6	#6	5'-9	7	#6	6'-0	7	#6	6'-0
e3	C	7	#5	4'-9	6	#5	4'-9	6	#5	5'-0	6	#5	5'-3	6	#5	5'-3	6	#5	5'-6	6	#6	5'-9	6	#6	6'-0	7	#6	6'-3	7	#6	6'-3
e4	C	6	#5	5'-0	6	#5	5'-0	6	#5	5'-3	6	#5	5'-6	6	#6	5'-6	6	#6	5'-9	6	#6	6'-0	6	#7	7'-3	6	#7	7'-6	7	#7	7'-9
e5	C	6	#5	5'-3	5	#5	5'-3	6	#5	5'-6	6	#6	5'-9	5	#6	5'-9	6	#6	6'-0	6	#7	7'-3	6	#7	7'-6	6	#7	7'-9	6	#7	8'-3
e6	C				5	#5	5'-6	6	#6	5'-9	6	#6	6'-0	5	#7	7'-3	5	#7	7'-6	6	#7	7'-6	6	#7	7'-9	6	#7	8'-0	6	#7	8'-6
e7	C													5	#7	7'-6	5	#7	7'-9	6	#7	8'-0	6	#7	8'-3	6	#7	8'-6	6	#7	8'-9
e8	C	3	#5	5'-6	3	#5	5'-9	3	#6	6'-0	3	#6	6'-3	3	#7	7'-9	3	#7	8'-0	3	#7	8'-3	3	#7	8'-6	3	#7	8'-9	3	#8	9'-0
e9	C	9	#5	5'-6	10	#5	5'-9	10	#6	6'-0	11	#6	6'-3	11	#7	7'-9	12	#7	8'-0	12	#7	8'-3	13	#7	8'-6	13	#7	8'-9	14	#8	9'-0
e10	C	5	#5	5'-6	5	#5	5'-9	5	#6	6'-0	6	#6	6'-3	6	#7	7'-9	6	#7	8'-0	6	#7	8'-3	7	#7	8'-6	7	#7	8'-9	7	#8	9'-0
e11	C	4	#5	5'-3	4	#5	5'-6	4	#6	5'-9	4	#6	6'-0	4	#7	7'-6	5	#7	7'-6	5	#7	7'-9	5	#7	8'-0	5	#7	8'-3	5	#7	8'-6
e12	C	4	#5	5'-0	4	#5	5'-3	4	#5	5'-6	4	#5	5'-9	5	#6	5'-9	5	#6	6'-0	5	#7	7'-6	5	#7	7'-9	5	#7	8'-0	6	#7	8'-0
e13	C	4	#5	4'-9	4	#5	4'-9	4	#5	5'-0	5	#5	5'-3	5	#5	5'-6	5	#5	5'-9	5	#6	6'-0	5	#6	6'-3	6	#6	6'-6	6	#6	6'-6
e14	C	4	#5	4'-6	4	#5	4'-6	5	#5	4'-9	5	#5	5'-0	5	#5	5'-0	5	#5	5'-3	5	#5	5'-6	6	#6	5'-9	6	#6	6'-0	6	#6	6'-3
e15	C	4	#5	4'-3	5	#5	4'-3	5	#5	4'-6	5	#5	4'-9	5	#5	4'-9	5	#5	5'-0	6	#5	5'-3	6	#5	5'-6	6	#5	5'-6	6	#5	5'-9
f1	str	6	#4	7'-0	6	#4	7'-3	6	#4	7'-9	7	#4	8'-0	7	#4	8'-3	7	#4	8'-9	7	#4	9'-0	8	#4	9'-3	8	#4	9'-9	8	#4	10'-0
f2	str	6	#4	8'-0	6	#4	8'-3	6	#4	8'-9	6	#4	9'-3	7	#4	9'-6	7	#4	10'-0	7	#4	10'-3	7	#4	10'-6	8	#4	11'-0	8	#4	11'-3
f3	str	5	#4	8'-9	6	#4	9'-3	6	#4	9'-9	6	#4	10'-3	6	#4	10'-6	7	#4	11'-0	7	#4	11'-3	7	#4	11'-9	7	#4	12'-3	8	#4	12'-9
f4	str	5	#4	9'-9	5	#4	10'-3	6	#4	10'-9	6	#4	11'-3	6	#4	11'-6	6	#4	12'-0	7	#4	12'-6	7	#4	13'-0	7	#4	13'-6	7	#4	14'-0
f5	str	4	#4	7'-0	4	#4	7'-3	4	#4	7'-9	4	#4	8'-0	4	#4	8'-3	5	#4	8'-9	5	#4	9'-0	5	#4	9'-3	5	#4	9'-9	5	#4	10'-0
f6	str	4	#4	8'-0	4	#4	8'-3	4	#4	8'-9	4	#4	9'-0	4	#4	9'-6	4	#4	10'-0	5	#4	10'-3	5	#4	10'-6	5	#4	11'-0	5	#4	11'-3
f7	str	3	#4	9'-0	3	#4	9'-6	4	#4	10'-0	4	#4	10'-3	4	#4	10'-6	4	#4	11'-0	4	#4	11'-6	4	#4	12'-0	5	#4	12'-6	5	#4	12'-9
f8	str	3	#4	10'-0	3	#4	10'-6	3	#4	11'-0	4	#4	11'-3	4	#4	11'-9	4	#4	12'-3	4	#4	12'-9	4	#4	13'-3	4	#4	13'-9	5	#4	14'-0
g	str	6	#4	10'-0	6	#4	10'-6	6	#4	11'-0	2	#4	11'-6	6	#4	12'-0	6	#4	12'-6	6	#4	13'-3	6	#4	13'-9	6	#4	14'-3	6	#4	14'-9
m1	str	4	#4	34'-6	4	#4	36'-0	4	#4	37'-6	4	#4	39'-3	4	#4	40'-9	5	#4	42'-3	5	#4	44'-0	5	#4	45'-6	5	#4	47'-0	5	#4	48'-9
m2	str	1	#4	34'-6	1	#4	36'-0	1	#4	37'-6	1	#4	39'-3	1	#4	40'-9	1	#4	42'-3	1	#4	44'-0	1	#4	45'-6	1	#4	47'-0	1	#4	48'-9
m3	str	4	#4	25'-6	4	#4	26'-9	4	#4	28'-0	4	#4	29'-3	4	#4	30'-6	5	#4	31'-9	5	#4	33'-0	5	#4	34'-3	5	#4	35'-6	5	#4	36'-9
m4	str	1	#4	25'-6	1	#4	26'-9	1	#4	28'-0	1	#4	29'-3	1	#4	30'-6	1	#4	31'-9	1	#4	33'-0	1	#4	34'-3	1	#4	35'-6	1	#4	36'-9
n1	str	4	#4	17'-0	4	#4	18'-0	4	#4	18'-9	4	#4	19'-9	4	#4	20'-6	5	#4	21'-6	5	#4	22'-6	5	#4	23'-6	5	#4	24'-3	5	#4	25'-3
n2	str	1	#4	17'-0	1	#4	18'-0	1	#4	18'-9	1	#4	19'-9	1	#4	20'-6	1	#4	21'-6	1	#4	22'-6	1	#4	23'-6	1	#4	24'-3	1	#4	25'-3
p	str	4	#5	12'-0	4	#5	12'-6	4	#5	13'-0	4	#5	13'-9	4	#5	14'-3	4	#5	14'-9	4	#5	15'-6	4	#5	16'-3	4	#5	17'-0	4	#5	17'-6
q	str	2	#6	14'-0	2	#6	14'-6	2	#6	15'-0	2	#6	15'-9	2	#6	16'-3	2	#6	16'-9	2	#6	17'-6	2	#6	18'-3	2	#6	19'-0	2	#6	19'-6
u	B	86	#4	7'-0	90	#4	7'-0	94	#4	7'-0	98	#4	7'-0	102	#4	7'-0	106	#4	7'-0	110	#4	7'-0	114	#4	7'-0	118	#4	7'-0	122	#4	7'-0
v	str	6	#4	32'-6	6	#4	34'-0	6	#4	35'-6	6	#4	37'-0	6	#4	38'-6	6	#4	40'-0	6	#4	41'-6	6	#4	43'-0	6	#4	44'-6	6	#4	46'-0
w	str	6	#4	20'-0	6	#4	21'-0	6	#4	22'-0	6	#4	23'-0	6	#4	24'-0	6	#4	25'-0	6	#4	26'-0	6	#4	27'-0	6	#4	28'-0	6	#4	29'-0

Pipe Diameter

	90"	96"	102"	108"	114"	120"	126"	132"	138"	144"
A	0'- 3	0'- 3	0'- 3	0'- 3	0'- 3	0'- 3	0'- 3	0'- 3	0'- 3	0'- 3
B	2'- 2	2'- 2	2'- 3	2'- 3	2'- 4	2'- 4	2'- 5	2'- 5	2'- 6	2'- 6
C	2'- 4	2'- 6	2'- 7	2'- 9	2'-10	3'- 0	3'- 1	3'- 3	3'- 4	3'- 6
D	1'- 6	1'- 7	1'- 8	1'- 9	1'-10	1'-11	2'- 0	2'- 1	2'- 2	2'- 3
E	6'- 0	6'- 3	6'- 6	6'- 9	7'- 0	7'- 3	7'- 6	7'- 9	8'- 0	8'- 3
F	32'- 0	33'- 6	35'- 0	36'- 6	38'- 0	39'- 6	41'- 0	42'- 6	44'- 0	45'- 6
G	5'- 6	5'- 9 3/8	6'- 0 7/8	6'- 4 3/8	6'- 7 7/8	6'-11 1/4	7'- 2 3/4	7'- 6 1/4	7'- 9 5/8	8'- 1 1/8
H	9'- 6	10'- 0	10'- 6	11'- 0	11'- 6	12'- 0	12'- 6	13'- 0	13'- 6	14'- 0
J	5'-10	6'- 2	6'- 6	6'-10	7'- 2	7'- 6	7'-10	8'- 2	8'- 6	8'-10
K	34'- 9 1/8	36'- 4 1/4	37'-10 7/8	39'- 6	41'- 0 3/4	42'- 7 7/8	44'- 3 1/4	45'-10 3/8	47'- 5 1/8	49'- 0 1/4
L	7'- 3 1/8	7'- 7 5/8	7'-11 7/8	8'- 4 3/8	8'- 8 5/8	9'- 1 1/8	9'- 6	9'-10 5/8	10'- 2 3/4	10'- 7 3/8
M	5'- 0 7/8	5'- 4 3/8	5'- 7 3/8	5'-10 7/8	6'- 2	6'- 5 1/2	6'- 9 1/4	7'- 0 3/4	7'- 3 7/8	7'- 7 3/8
N	0'- 3	0'- 6	0'- 3	0'- 6	0'- 3	0'- 6	0'- 3	0'- 6	0'- 3	0'- 6
P	10'- 4	10'-10 3/8	11'- 3 7/8	11'-10 3/8	12'- 3 7/8	12'-10 1/4	13'- 5 3/4	14'- 0 1/4	14'- 5 5/8	15'-0 1/8
R	20'- 0	21'- 0	22'- 0	23'- 0	24'- 0	25'- 0	26'- 0	27'- 0	28'- 0	29'- 0
S	5'-10	6'- 2	6'- 6	6'-10	7'- 2	7'- 6	7'-10	8'- 2	8'- 6	8'-10
T	25'-10	27'- 1	28'- 3	29'- 6	30'- 8	31'-11	33'- 3	34'- 6	35'- 8	36'-11
V	4'- 4	4'- 7 3/8	4'- 9 7/8	5'- 1 3/8	5'- 3 7/8	5'- 7 1/4	5'-11 3/4	6'- 3 1/4	6'- 5 5/8	6'- 9 1/8
W	6'- 6	6'- 9 3/8	7'- 0 7/8	7'- 4 3/8	7'- 7 7/8	7'-11 1/4	8'- 4 3/4	8'- 8 1/4	8'-11 5/8	9'- 3 1/8
X	5'- 8	5'-11 3/8	6'- 2 7/8	6'- 6 3/8	6'- 9 3/4	7'- 1 1/4	7'- 7 7/8	7'-11 1/4	8'- 2 3/4	8'- 6 1/4

QUANTITIES

PIPE Dia.	REINF Lbs.	CONCRETE C.Y.
90"	2760	49.2
96"	2990	53.3
102"	3365	57.6
108"	3745	62.1
114"	4335	66.6
120"	4755	71.4
126"	5380	80.9
132"	5955	86.4
138"	6465	91.9
144"	7000	97.8

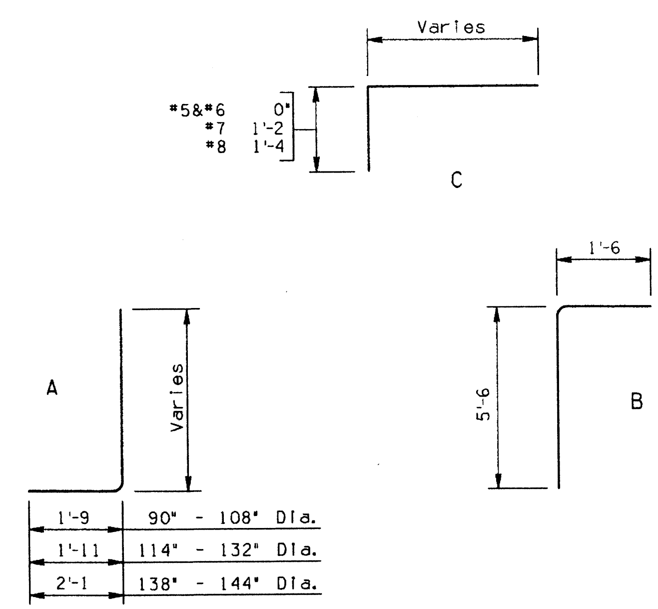

BENDS

NOTE:
Quantities and steel list shown are for one headwall.

DESIGN APPROVED	ARIZONA DEPARTMENT OF TRANSPORTATION HIGHWAYS DIVISION STANDARD DRAWINGS	REVISION
APPROVED FOR DISTRIBUTION	OUTLET HEADWALLS 30° SKEW PIPE CULVERT 6:1 SLOPE	STANDARD NO. B-14.80

Registered Professional Engineer (Civil) 9910 F. DANIEL DAVIS Arizona U. S. A.

	NO	DESCRIPTION OF REVISIONS	MADE BY	DATE
DESIGN K. W. 2-92	1			
DRAWN J. M. 4-92	2			
CHECKED G. K. 4-92	3			
	4			

ZF1:[051020]SB1480.DGN;1 VIEW NAME:
08-MAY-1992 08:06

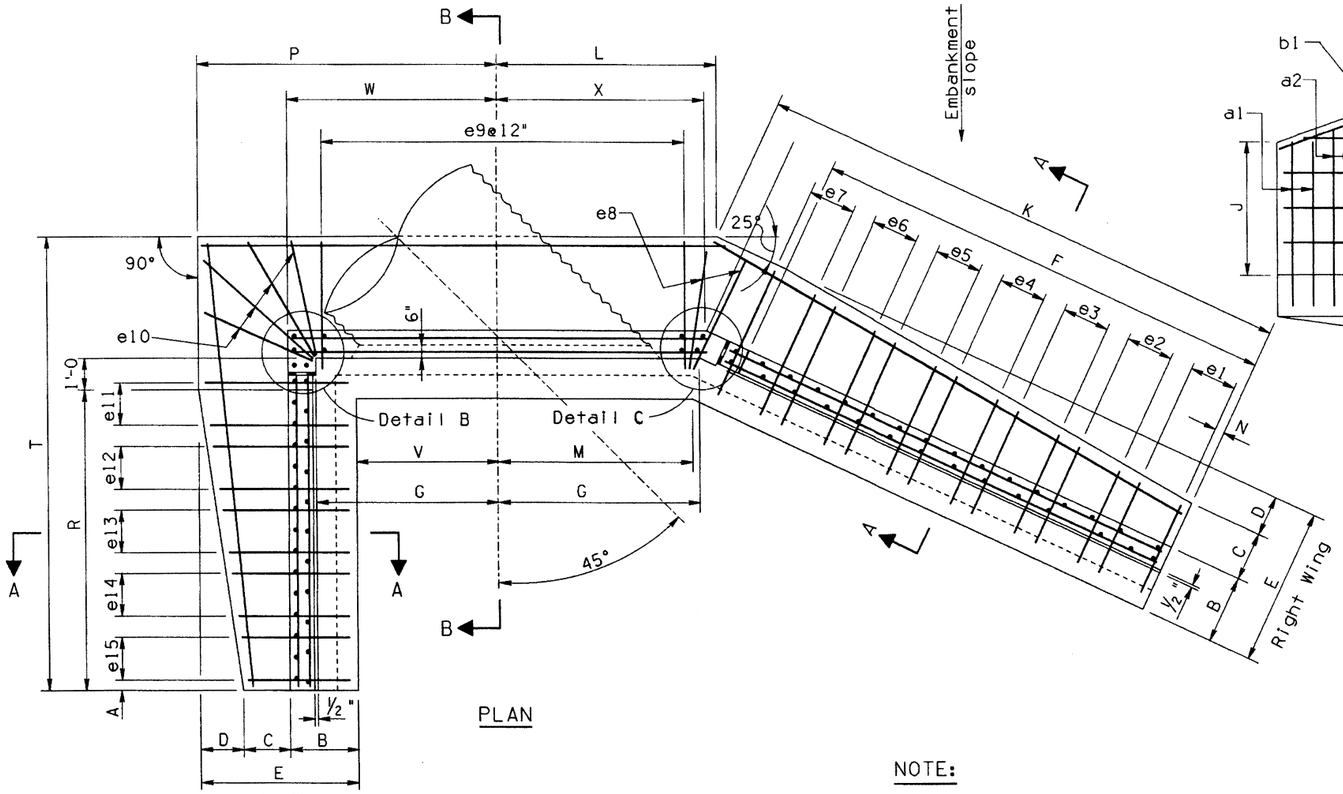

PLAN

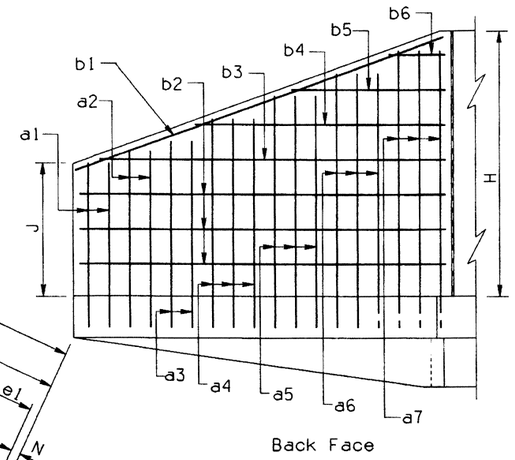

RIGHT WING ELEVATION

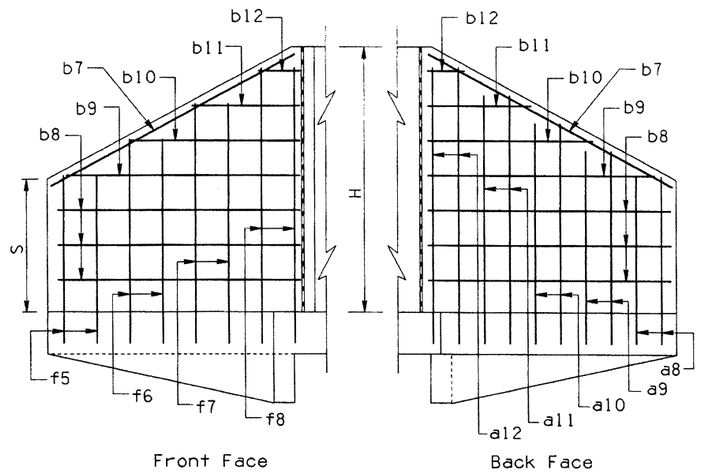

LEFT WING ELEVATION

NOTE:

See B-11.10 for Detail B and Detail C.

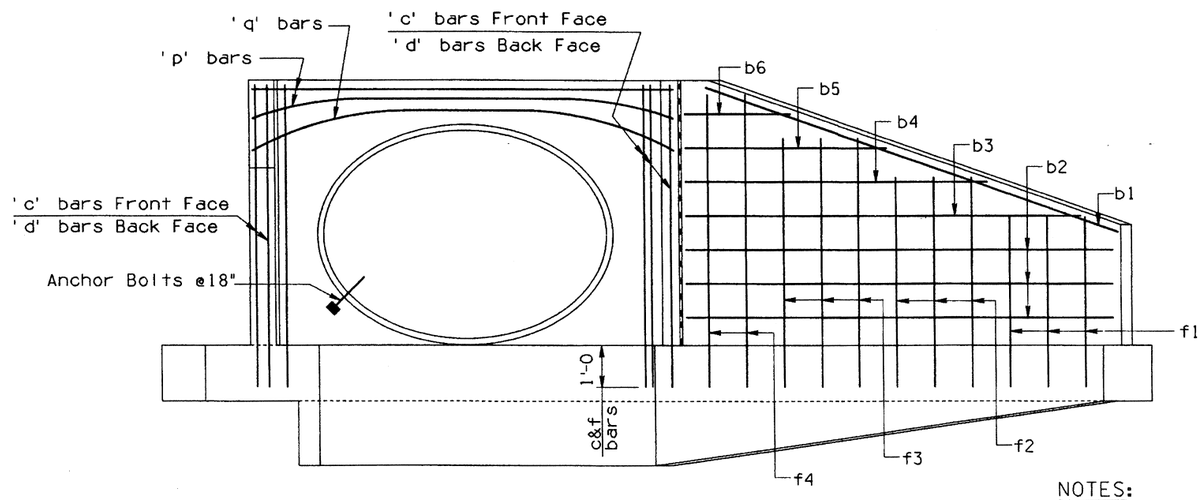

ELEVATION

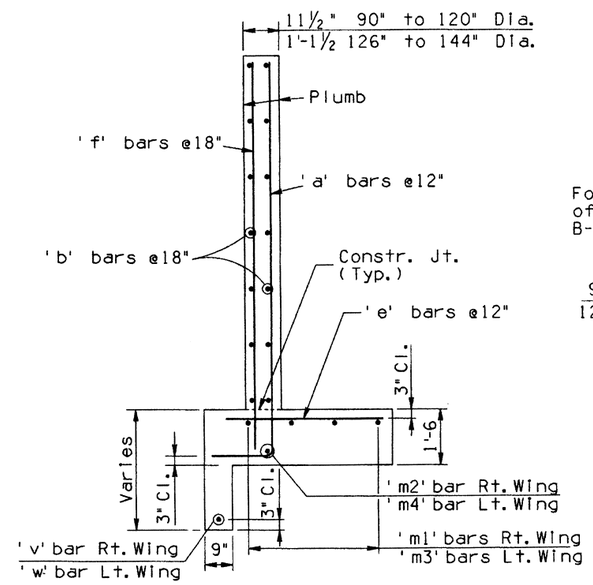

SECTION A-A

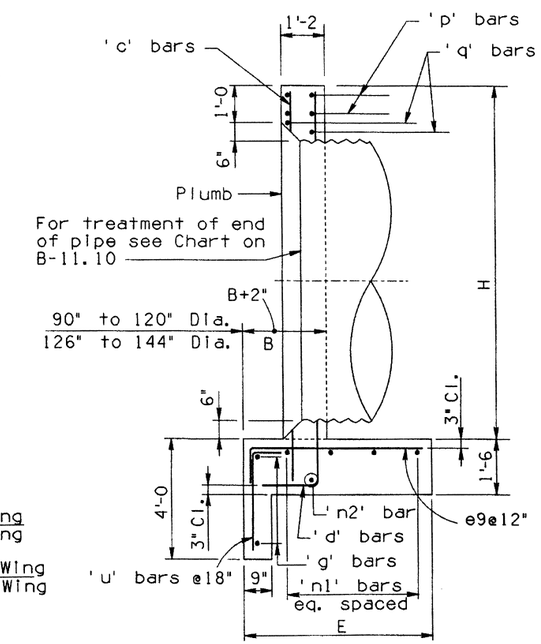

SECTION B-B

NOTES:

For General Notes and Misc. Details see B-11.10. For steel list and bend diagrams see B-15.20, B-15.30 or B-15.40.

DESIGN	K.W.	4-92	NO	DESCRIPTION OF REVISIONS	MADE BY	DATE
DRAWN	J.M.	4-92	1			
CHECKED	G.K.	4-92	2			
			3			
			4			

Registered Professional Engineer (Civil) 9910 F. DANIEL DAVIS Arizona U.S.A. 5-14-92	DESIGN APPROVED	ARIZONA DEPARTMENT OF TRANSPORTATION HIGHWAYS DIVISION STANDARD DRAWINGS	REVISION 4-92
	APPROVED FOR DISTRIBUTION	INLET HEADWALLS 45° SKEW PIPE CULVERT	STANDARD NO. B-15.10

ZF1:(051020)SB1510.DGN;2 VIEW NAME:
08-MAY-1992 09:07

STEEL LIST

Mark	Bend	90" Dia.			96" Dia.			102" Dia.			108" Dia.			114" Dia.			120" Dia.			126" Dia.			132" Dia.			138" Dia.			144" Dia.		
		No	Size	Lgth	No	Size	Lgth	No	Size	Lgth	No	Size	Lgth	No	Size	Lgth	No	Size	Lgth	No	Size	Lgth	No	Size	Lgth	No	Size	Lgth	No	Size	Lgth
a1	A	4	#5	7'-0	4	#5	7'-3	4	#5	7'-6	4	#5	7'-9	4	#5	8'-3	4	#5	8'-6	5	#5	8'-9	5	#5	9'-0	5	#5	9'-6	5	#5	9'-9
a2	A	4	#5	7'-9	4	#5	8'-0	4	#5	8'-3	4	#5	8'-6	4	#5	9'-3	4	#5	9'-6	4	#5	9'-9	5	#5	10'-0	5	#5	10'-6	5	#6	10'-9
a3	A	3	#5	8'-6	4	#5	9'-0	4	#5	9'-3	4	#5	9'-6	4	#5	10'-3	4	#5	10'-6	4	#5	10'-9	4	#5	11'-0	5	#6	11'-6	5	#6	12'-0
a4	A	3	#5	9'-3	3	#5	9'-9	4	#5	10'-0	4	#5	10'-3	4	#5	11'-3	4	#6	11'-6	4	#5	11'-9	4	#6	12'-0	4	#6	12'-9	5	#7	13'-0
a5	A	3	#5	10'-3	3	#5	10'-6	3	#5	10'-9	4	#6	11'-3	4	#6	12'-0	4	#7	12'-6	4	#6	13'-0	4	#7	13'-0	4	#7	13'-9	4	#7	14'-3
a6	A	3	#5	11'-0	3	#6	11'-3	3	#6	11'-6	3	#6	12'-0	4	#7	13'-0	4	#7	13'-6	4	#7	14'-0	4	#7	14'-3	4	#7	15'-0	4	#8	15'-3
a7	A	3	#6	11'-9	3	#6	12'-3	3	#6	12'-6	3	#7	13'-0	3	#7	14'-0	4	#7	14'-6	4	#7	15'-0	4	#8	15'-3	4	#8	16'-0	4	#8	16'-6
a8	A	3	#5	6'-6	3	#5	6'-9	3	#5	7'-0	3	#5	7'-3	3	#5	7'-6	3	#5	7'-9	3	#5	8'-0	3	#5	8'-3	3	#5	8'-9	3	#5	9'-0
a9	A	3	#5	8'-3	3	#5	8'-6	3	#5	8'-9	3	#5	9'-0	3	#5	9'-0	3	#5	9'-3	3	#5	9'-6	3	#5	9'-9	3	#5	10'-6	3	#5	10'-9
a10	A	3	#5	10'-3	3	#5	10'-6	3	#5	10'-6	3	#6	10'-9	3	#6	10'-6	3	#6	10'-9	3	#6	11'-3	3	#6	11'-6	3	#6	12'-3	3	#6	12'-6
a11	A	2	#6	12'-0	2	#6	12'-3	3	#6	12'-3	3	#7	12'-6	2	#6	12'-0	2	#7	12'-3	3	#7	12'-9	3	#7	13'-3	3	#7	13'-9	3	#7	14'-3
a12	A													2	#7	13'-6	2	#7	13'-9	2	#7	14'-3	2	#8	14'-6	3	#8	15'-6	3	#8	16'-0
b1	str	2	#4	22'-6	2	#4	23'-6	2	#4	24'-6	2	#4	25'-6	2	#4	26'-6	2	#4	27'-9	2	#4	28'-9	2	#4	29'-9	2	#4	30'-9	2	#4	31'-9
b2	str	6	#4	22'-0	6	#4	23'-0	6	#4	24'-0	6	#4	25'-0	6	#4	26'-0	8	#4	27'-0	8	#4	28'-0	8	#4	29'-0	8	#4	30'-0	8	#4	31'-0
b3	str	2	#4	16'-9	2	#4	18'-9	2	#4	20'-6	2	#4	23'-0	2	#4	25'-0	2	#4	20'-9	2	#4	23'-0	2	#4	24'-9	2	#4	26'-9	2	#4	28'-9
b4	str	2	#4	10'-6	2	#4	12'-6	2	#4	14'-3	2	#4	16'-3	2	#4	18'-9	2	#4	16'-6	2	#4	16'-9	2	#4	18'-6	2	#4	20'-6	2	#4	22'-6
b5	str	2	#4	4'-3	2	#4	6'-3	2	#4	8'-3	2	#4	10'-3	2	#4	12'-6	2	#4	8'-3	2	#4	10'-3	2	#4	12'-3	2	#4	14'-6	2	#4	16'-3
b6	str							2	#4	2'-0	2	#4	4'-0	2	#4	6'-3	2	#4	2'-0	2	#4	4'-0	2	#4	6'-6	2	#4	8'-3	2	#4	10'-0
b7	str	2	#4	11'-6	2	#4	12'-0	2	#4	12'-6	2	#4	13'-0	2	#4	13'-9	2	#4	14'-3	2	#4	14'-9	2	#4	15'-6	2	#4	16'-0	2	#4	16'-6
b8	str	4	#4	10'-0	4	#4	10'-6	6	#4	11'-0	6	#4	11'-6	6	#4	12'-0	6	#4	12'-6	6	#4	13'-0	6	#4	13'-6	8	#4	14'-0	8	#4	14'-6
b9	str	2	#4	9'-3	2	#4	10'-3	2	#4	8'-3	2	#4	9'-0	2	#4	10'-3	2	#4	11'-3	2	#4	12'-0	2	#4	13'-0	2	#4	11'-3	2	#4	12'-3
b10	str	2	#4	6'-9	2	#4	7'-6	2	#4	5'-9	2	#4	6'-6	2	#4	7'-9	2	#4	8'-9	2	#4	9'-3	2	#4	10'-3	2	#4	8'-9	2	#4	9'-9
b11	str	2	#4	4'-0	2	#4	5'-0	2	#4	3'-6	2	#4	4'-3	2	#4	5'-3	2	#4	6'-0	2	#4	6'-9	2	#4	7'-9	2	#4	6'-0	2	#4	7'-0
b12	str	2	#4	1'-6	2	#4	2'-3	2	#4	1'-0	2	#4	1'-9	2	#4	2'-9	2	#4	3'-6	2	#4	4'-0	2	#4	5'-0	2	#4	3'-6	2	#4	4'-6
c	str	4	#4	10'-6	4	#4	11'-0	4	#4	11'-6	4	#4	12'-0	4	#4	12'-6	4	#4	13'-0	4	#4	13'-6	4	#4	14'-0	4	#4	14'-6	4	#4	15'-0
d	A	6	#6	12'-3	6	#6	12'-9	6	#6	13'-3	6	#7	13'-9	6	#7	14'-6	6	#7	15'-0	6	#7	15'-6	6	#8	16'-0	6	#8	16'-6	6	#8	17'-0
e1	C	4	#5	3'-6	4	#5	3'-9	4	#5	3'-9	4	#5	4'-0	4	#5	4'-0	4	#5	4'-3	4	#5	4'-3	5	#5	4'-6	5	#5	4'-6	5	#5	4'-9
e2	C	4	#5	4'-0	4	#5	4'-3	4	#5	4'-3	4	#5	4'-6	4	#5	4'-9	4	#5	4'-9	4	#5	5'-0	4	#5	5'-3	5	#5	5'-3	5	#5	5'-6
e3	C	3	#5	4'-6	4	#5	4'-9	4	#5	4'-9	4	#5	5'-3	4	#5	5'-3	4	#5	5'-6	4	#5	5'-9	4	#6	6'-0	4	#6	6'-0	5	#6	6'-3
e4	C	3	#5	5'-0	3	#5	5'-3	4	#5	5'-3	4	#6	5'-6	4	#6	5'-9	4	#6	6'-0	4	#6	6'-3	4	#6	6'-6	4	#7	7'-6	4	#7	8'-0
e5	C	3	#5	5'-6	3	#5	5'-9	3	#6	6'-0	4	#6	6'-3	4	#7	7'-6	4	#7	7'-6	4	#7	8'-0	4	#7	8'-3	4	#7	8'-6	4	#8	9'-0
e6	C	3	#5	6'-0	3	#6	6'-3	3	#7	7'-3	3	#7	7'-9	4	#7	8'-0	4	#7	8'-3	4	#7	8'-6	4	#8	9'-0	4	#8	9'-3	4	#9	10'-3
e7	C	3	#6	6'-6	3	#7	7'-6	3	#7	8'-0	3	#7	8'-3	3	#8	8'-9	3	#8	9'-0	4	#8	9'-6	4	#9	10'-3	4	#9	10'-6	4	#9	10'-6
e8	C	2	#6	6'-6	2	#7	8'-0	2	#7	8'-3	2	#7	8'-6	2	#8	9'-0	2	#8	9'-6	2	#8	9'-9	2	#9	10'-6	2	#9	10'-9	2	#9	11'-3
e9	C	11	#6	6'-6	12	#7	8'-0	13	#7	8'-3	13	#7	8'-6	14	#8	9'-0	15	#8	9'-6	16	#8	9'-9	16	#9	10'-6	17	#9	10'-9	18	#9	11'-3
e10	C	5	#6	6'-6	5	#7	8'-0	5	#7	8'-3	6	#7	8'-6	6	#8	9'-0	6	#8	9'-6	6	#8	9'-9	7	#9	10'-6	7	#9	10'-9	7	#9	11'-3
e11	C	2	#5	6'-6	2	#6	6'-9	3	#6	7'-0	3	#7	8'-3	2	#7	8'-6	2	#7	8'-9	2	#7	9'-3	2	#8	9'-9	3	#8	10'-0	3	#8	10'-6
e12	C	3	#5	5'-6	3	#5	5'-9	3	#5	6'-0	3	#6	6'-3	2	#6	7'-0	2	#6	7'-0	3	#6	7'-6	3	#7	8'-6	3	#7	8'-9	3	#7	9'-3
e13	C	3	#5	4'-6	3	#5	4'-9	3	#5	4'-9	3	#5	5'-3	3	#5	6'-0	3	#5	6'-0	3	#5	6'-3	3	#6	6'-6	3	#6	6'-9	3	#6	7'-0
e14	C	3	#5	3'-6	3	#5	3'-9	3	#5	3'-9	3	#5	4'-0	3	#5	5'-0	3	#5	5'-3	3	#5	5'-3	3	#5	5'-6	3	#5	5'-9	3	#5	6'-0
e15	C													3	#5	4'-0	3	#5	4'-3	3	#5	4'-3	3	#5	4'-6	3	#5	4'-9	3	#5	4'-9
f1	str	4	#4	5'-3	4	#4	5'-6	4	#4	5'-9	5	#4	6'-0	5	#4	6'-3	5	#4	6'-6	5	#4	6'-9	5	#4	7'-0	5	#4	7'-3	6	#4	7'-6
f2	str	4	#4	6'-9	4	#4	7'-0	4	#4	7'-3	4	#4	7'-6	5	#4	7'-9	5	#4	8'-3	5	#4	8'-6	5	#4	8'-9	5	#4	9'-0	5	#4	9'-3
f3	str	4	#4	8'-3	4	#4	8'-6	4	#4	8'-9	4	#4	9'-3	4	#4	9'-6	4	#4	10'-0	5	#4	10'-3	5	#4	10'-6	5	#4	10'-9	5	#4	11'-3
f4	str	3	#4	9'-9	4	#4	10'-0	4	#4	10'-3	4	#4	11'-0	4	#4	11'-3	4	#4	11'-9	4	#4	12'-3	5	#4	12'-6	5	#4	12'-9	5	#4	13'-3
f5	str	3	#4	4'-6	3	#4	4'-9	2	#4	5'-0	2	#4	5'-3	2	#4	5'-6	3	#4	5'-9	3	#4	6'-0	3	#4	6'-3	3	#4	6'-6	3	#4	6'-9
f6	str	2	#4	6'-9	2	#4	7'-3	2	#4	6'-9	2	#4	7'-0	2	#4	7'-6	2	#4	7'-9	2	#4	8'-3	2	#4	8'-6	3	#4	8'-9	3	#4	9'-3
f7	str	2	#4	9'-3	2	#4	9'-9	2	#4	8'-6	2	#4	8'-9	2	#4	9'-3	2	#4	10'-0	2	#4	10'-3	2	#4	10'-6	2	#4	11'-3	2	#4	11'-6
f8	str							2	#4	10'-6	2	#4	10'-9	2	#4	11'-3	2	#4	12'-0	2	#4	12'-6	2	#4	12'-9	2	#4	13'-6	2	#4	14'-0
g	str	2	#4	11'-6	2	#4	12'-3	2	#4	12'-9	2	#4	13'-6	2	#4	14'-3	2	#4	15'-0	2	#4	15'-9	2	#4	16'-3	2	#4	17'-0	2	#4	17'-9
m1	str	5	#4	24'-0	5	#4	25'-0	5	#4	26'-0	6	#4	27'-3	6	#4	28'-3	6	#4	29'-3	6	#4	30'-6	7	#4	31'-6	7	#4	32'-6	7	#4	33'-9
m2	str	1	#4	24'-0	1	#4	25'-0	1	#4	26'-0	1	#4	27'-3	1	#4	28'-3	1	#4	29'-3	1	#4	30'-6	1	#4	31'-6	1	#4	32'-6	1	#4	33'-9
m3	str	5	#4	16'-6	5	#4	17'-3	5	#4	18'-3	6	#4	19'-0	6	#4	19'-9	6	#4	20'-6	6	#4	21'-6	7	#4	22'-3	7	#4	23'-3	7	#4	24'-0
m4	str	1	#4	16'-6	1	#4	17'-3	1	#4	18'-3	1	#4	19'-0	1	#4	19'-9	1	#4	20'-6	1	#4	21'-6	1	#4	22'-3	1	#4	23'-3	1	#4	24'-0
n1	str	5	#4	20'-0	5	#4	21'-0	5	#4	22'-0	6	#4	23'-0	6	#4	24'-0	6	#4	25'-0	6	#4	26'-0	7	#4	27'-0	7	#4	28'-0	7	#4	29'-0
n2	str	1	#4	20'-0	1	#4	21'-0	1	#4	22'-0	1	#4	23'-0	1	#4	24'-0	1	#4	25'-0	1	#4	26'-0	1	#4	27'-0	1	#4	28'-0	1	#4	29'-0
p	str	4	#5	13'-9	4	#5	14'-6	4	#5	15'-3	4	#5	16'-0	4	#5	16'-9	4	#5	17'-6	4	#5	18'-3	4	#5	19'-3	4	#5	20'-0	4	#5	20'-9
q	str	2	#6	15'-9	2	#6	16'-6	2	#6	17'-3	2	#6	18'-0	2	#6	18'-9	2	#6	19'-6	2	#6	20'-3	2	#6	21'-3	2	#6	22'-0	2	#6	22'-9
u	B	8	#4	5'-0	9	#4	5'-0	10	#4	5'-0	10	#4	5'-0	11	#4	5'-0	11	#4	5'-0	12	#4	5'-0	12	#4	5'-0	13	#4	5'-0	13	#4	5'-0
v	str	1	#4	23'-0	1	#4	24'-0	1	#4	25'-0	1	#4	26'-0	1	#4	27'-0	1	#4	28'-0	1	#4	29'-0	1	#4	30'-0	1	#4	31'-0	1	#4	32'-0
w	str	1	#4	10'-3	1	#4	10'-9	1	#4	11'-3	1	#4	11'-9	1	#4	12'-3	1	#4	12'-9	1	#4	13'-3	1	#4	13'-9	1	#4	14'-3	1	#4	14'-9

Pipe Diameter

	90"	96"	102"	108"	114"	120"	126"	132"	138"	144"
A	0'- 3	0'- 6	0'- 3	0'- 6	0'- 3	0'- 6	0'- 3	0'- 6	0'- 3	0'- 6
B	2'- 2	2'- 2	2'- 3	2'- 3	2'- 4	2'- 4	2'- 5	2'- 5	2'- 6	2'- 6
C	1'- 9	1'-10	1'-11	2'- 0	2'- 1	2'- 2	2'- 3	2'- 4	2'- 5	2'- 6
D	3'- 1	3'- 4	3'- 6	3'- 9	3'-11	4'- 2	4'- 4	4'- 7	4'- 9	5'- 0
E	7'- 0	7'- 4	7'- 8	8'- 0	8'- 4	8'- 8	9'- 0	9'- 4	9'- 8	10'- 0
F	22'- 0	23'- 0	24'- 0	25'- 0	26'- 0	27'- 0	28'- 0	29'- 0	30'- 0	31'- 0
G	6'- 5⅝	6'- 9⅞	7'- 2⅛	7'- 6⅜	7'-10⅝	8'- 2⅞	8'- 7⅛	8'-11⅜	9'- 3⅝	9'- 7⅞
H	9'- 6	10'- 0	10'- 6	11'- 0	11'- 6	12'- 0	12'- 6	13'- 0	13'- 6	14'- 0
J	4'- 3	4'- 6	4'- 9	5'- 0	5'- 3	5'- 6	5'- 9	6'- 0	6'- 3	6'- 6
K	24'- 3½	25'- 4⅜	26'- 5⅛	27'- 6	28'- 6⅝	29'- 7½	30'- 8⅝	31'- 9½	32'-10⅞	33'-11
L	7'- 9⅛	8'- 2¼	8'- 7¼	9'- 0⅜	9'- 5¼	9'-10⅜	10'- 3¾	10'- 8⅞	11'- 1¾	11'- 6⅞
M	6'- 2½	6'- 6¾	6'-10¾	7'- 3	7'- 7⅛	7'-11¼	8'- 3¾	8'- 8	9'- 0	9'- 4¼
N	0'- 3	0'- 3	0'- 3	0'- 3	0'- 3	0'- 3	0'- 3	0'- 3	0'- 3	0'- 3
P	12'- 3⅝	12'-11⅞	13'- 7⅛	14'- 3⅜	14'-10⅝	15'- 6⅞	16'- 4⅛	17'- 0⅜	17'- 7⅝	18'- 3⅞
R	10'- 0	10'- 6	11'- 0	11'- 6	12'- 0	12'- 6	13'- 0	13'- 6	14'- 0	14'- 6
S	3'- 6	3'- 9	4'- 0	4'- 3	4'- 6	4'- 9	5'- 0	5'- 3	5'- 6	5'- 9
T	16'-10	17'- 8	18'- 5	19'- 3	20'- 0	20'-10	21'- 9	22'- 7	23'- 4	24'- 2
V	5'- 3⅝	5'- 7⅞	5'-11⅛	6'- 3⅜	6'- 6⅝	6'-10⅞	7'- 4⅛	7'- 8⅜	7'-11⅝	8'- 3⅞
W	7'- 5⅝	7'- 9⅞	8'- 2⅛	8'- 6⅜	8'-10⅝	9'- 2⅞	9'- 9⅛	10'- 1⅜	10'- 5⅝	10'- 9⅞
X	6'- 4	6'- 8¼	7'- 0½	7'- 4¾	7'- 9	8'- 1¼	8'-10¼	9'- 2½	9'- 6⅝	9'-10⅞

QUANTITIES

PIPE Dia.	REINF Lbs.	CONCRETE C.Y.
90"	1595	31.0
96"	1870	33.9
102"	2040	36.9
108"	2385	40.0
114"	2765	43.2
120"	3010	46.5
126"	3185	52.7
132"	3895	56.5
138"	4225	60.3
144"	4620	64.4

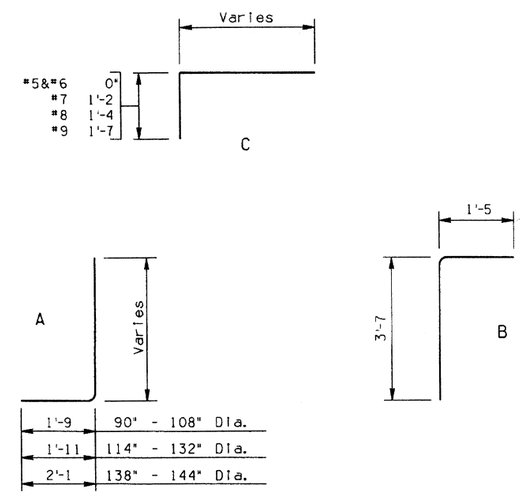

BENDS

NOTE:
Quantities and steel list shown are for one headwall.

DESIGN	K.W.	2-92
DRAWN	J.M.	4-92
CHECKED	G.K.	4-92

NO	DESCRIPTION OF REVISIONS	MADE BY	DATE
1			
2			
3			
4			

DESIGN APPROVED

APPROVED FOR DISTRIBUTION

ARIZONA
DEPARTMENT OF TRANSPORTATION
HIGHWAYS DIVISION
STANDARD DRAWINGS

INLET HEADWALLS
45° SKEW PIPE CULVERT
2:1 SLOPE

REVISION 4-92

STANDARD NO. B-15.20

ZF1:\0510203SB1520.DGN:1 VIEW NAME:
08-MAY-1992 09:09

STEEL LIST

Mark	Bend	90" Dia. No	90" Size	90" Lgth	96" Dia. No	96" Size	96" Lgth	102" Dia. No	102" Size	102" Lgth	108" Dia. No	108" Size	108" Lgth	114" Dia. No	114" Size	114" Lgth	120" Dia. No	120" Size	120" Lgth	126" Dia. No	126" Size	126" Lgth	132" Dia. No	132" Size	132" Lgth	138" Dia. No	138" Size	138" Lgth	144" Dia. No	144" Size	144" Lgth
a1	A	5	#5	9'-3	5	#5	9'-6	5	#5	9'-9	5	#5	10'-3	5	#5	10'-9	6	#5	11'-0	6	#5	11'-3	6	#5	11'-9	6	#5	12'-3	6	#6	12'-6
a2	A	4	#5	9'-9	5	#5	10'-0	5	#5	10'-3	5	#5	10'-9	5	#5	11'-3	5	#6	11'-6	6	#5	11'-9	6	#6	12'-3	6	#6	13'-0	6	#6	13'-3
a3	A	4	#5	10'-3	4	#5	10'-6	5	#5	10'-9	5	#5	11'-3	5	#6	12'-0	5	#6	12'-3	6	#6	12'-6	6	#6	13'-0	6	#6	13'-6	6	#7	13'-9
a4	A	4	#5	10'-6	4	#5	11'-0	5	#6	11'-3	5	#6	11'-9	5	#6	12'-6	5	#7	12'-9	5	#7	13'-0	6	#7	13'-6	6	#7	14'-3	6	#7	14'-6
a5	A	4	#5	11'-0	4	#6	11'-6	4	#6	12'-0	5	#6	12'-6	5	#7	13'-0	5	#7	13'-3	5	#7	13'-9	5	#7	14'-3	6	#7	15'-0	6	#7	15'-3
a6	A	4	#6	11'-6	4	#6	12'-0	4	#6	12'-6	4	#7	13'-0	5	#7	13'-6	5	#7	13'-9	5	#7	14'-3	5	#7	14'-9	6	#7	15'-6	6	#8	15'-9
a7	A	4	#6	12'-0	4	#6	12'-6	4	#7	13'-0	4	#7	13'-6	5	#7	14'-3	5	#7	14'-6	5	#7	15'-0	5	#8	15'-6	5	#8	16'-3	6	#8	16'-6
a8	A	3	#5	8'-3	4	#5	8'-6	4	#5	8'-9	4	#5	9'-0	4	#5	9'-6	4	#5	9'-9	5	#5	10'-0	5	#5	10'-3	5	#5	10'-9	5	#5	11'-0
a9	A	3	#5	9'-3	3	#5	9'-6	4	#5	9'-9	4	#5	10'-0	4	#5	10'-6	4	#5	10'-9	4	#5	11'-3	5	#6	11'-6	5	#6	12'-0	5	#6	12'-3
a10	A	3	#5	10'-3	3	#5	10'-6	3	#6	10'-9	4	#6	11'-3	4	#6	11'-9	4	#6	12'-0	4	#6	12'-3	4	#6	12'-9	5	#7	13'-3	5	#7	13'-9
a11	A	3	#5	11'-0	3	#6	11'-6	3	#6	12'-0	3	#6	12'-3	4	#7	12'-9	4	#7	13'-0	4	#7	13'-6	4	#7	14'-0	4	#7	14'-9	5	#8	15'-3
a12	A	3	#6	12'-0	3	#6	12'-6	3	#6	13'-0	3	#7	13'-6	3	#7	14'-0	4	#7	14'-3	4	#7	14'-9	4	#8	15'-3	4	#8	16'-0	4	#8	16'-6
b1	str	2	#4	28'-0	2	#4	29'-6	2	#4	31'-0	2	#4	32'-6	2	#4	34'-0	2	#4	35'-6	2	#4	37'-0	2	#4	38'-6	2	#4	40'-0	2	#4	41'-6
b2	str	8	#4	28'-0	8	#4	29'-6	8	#4	31'-0	10	#4	32'-6	10	#4	34'-0	10	#4	35'-6	10	#4	37'-0	12	#4	38'-6	12	#4	40'-0	12	#4	41'-6
b3	str	2	#4	21'-0	2	#4	27'-0	2	#4	29'-0	2	#4	20'-0	2	#4	25'-0	2	#4	28'-9	2	#4	33'-9	2	#4	26'-3	2	#4	30'-3	2	#4	34'-0
b4	str	2	#4	7'-6	2	#4	13'-6	2	#4	15'-9	2	#4	6'-0	2	#4	12'-0	2	#4	15'-9	2	#4	20'-6	2	#4	11'-0	2	#4	16'-6	2	#4	20'-0
b5	str							2	#4	2'-6							2	#4	3'-0	2	#4	7'-6				2	#4	3'-0	2	#4	6'-3
b6	str																														
b7	str	2	#4	14'-6	2	#4	15'-6	2	#4	16'-6	2	#4	17'-6	2	#4	18'-6	2	#4	19'-6	2	#4	20'-6	2	#4	21'-6	2	#4	22'-9	2	#4	23'-9
b8	str	8	#4	14'-0	8	#4	15'-0	8	#4	16'-0	8	#4	17'-0	8	#4	18'-0	8	#4	19'-0	10	#4	20'-0	10	#4	21'-0	10	#4	22'-0	10	#4	23'-0
b9	str	2	#4	8'-9	2	#4	10'-6	2	#4	12'-3	2	#4	14'-0	2	#4	16'-3	2	#4	18'-3	2	#4	14'-3	2	#4	16'-6	2	#4	18'-3	2	#4	20'-3
b10	str	2	#4	3'-6	2	#4	5'-3	2	#4	7'-3	2	#4	8'-6	2	#4	10'-9	2	#4	12'-9	2	#4	8'-9	2	#4	10'-9	2	#4	12'-9	2	#4	14'-9
b11	str							2	#4	2'-0	2	#4	3'-3	2	#4	5'-3	2	#4	7'-3	2	#4	3'-3	2	#4	5'-3	2	#4	7'-6	2	#4	9'-3
b12	str																2	#4	1'-9							2	#4	2'-0	2	#4	3'-6
c	str	4	#4	10'-6	4	#4	11'-0	4	#4	11'-6	4	#4	12'-0	4	#4	12'-6	4	#4	13'-0	4	#4	13'-6	4	#4	14'-0	4	#4	14'-6	4	#4	15'-0
d	A	6	#6	12'-3	6	#6	12'-9	6	#7	13'-3	6	#7	13'-9	6	#7	14'-6	6	#7	15'-0	6	#7	15'-6	6	#8	16'-0	6	#8	16'-6	6	#8	17'-0
e1	C	4	#5	4'-0	5	#5	4'-0	5	#5	4'-3	5	#5	4'-6	5	#5	4'-6	6	#5	4'-9	6	#5	5'-0	6	#5	5'-0	6	#6	5'-3	6	#6	5'-6
e2	C	4	#5	4'-3	5	#5	4'-3	5	#5	4'-6	5	#5	4'-9	5	#5	5'-0	5	#5	5'-3	6	#6	5'-6	6	#6	5'-6	6	#6	5'-9	6	#6	6'-0
e3	C	4	#5	4'-6	4	#5	4'-9	5	#5	5'-0	5	#5	5'-3	5	#5	5'-3	5	#5	5'-6	5	#6	5'-9	6	#6	6'-0	6	#6	6'-3	6	#7	7'-3
e4	C	4	#5	5'-0	4	#5	5'-3	4	#5	5'-6	5	#5	5'-6	5	#6	5'-9	5	#6	6'-0	5	#7	7'-3	6	#7	7'-3	6	#7	7'-9	6	#7	8'-0
e5	C	4	#5	5'-3	4	#5	5'-6	4	#5	5'-9	5	#6	6'-0	5	#6	6'-3	5	#6	6'-6	5	#7	7'-9	5	#7	7'-9	6	#7	8'-3	6	#8	8'-9
e6	C	4	#5	5'-6	4	#5	5'-9	4	#6	6'-0	4	#6	6'-3	5	#7	7'-6	5	#7	7'-9	5	#7	8'-0	5	#7	8'-3	5	#8	9'-0	6	#8	9'-3
e7	C	4	#5	5'-9	4	#6	6'-3	4	#6	6'-6	4	#7	7'-6	4	#7	8'-0	5	#7	8'-3	5	#7	8'-6	5	#8	9'-0	5	#8	9'-6	6	#8	9'-9
e8	C	2	#5	6'-0	2	#6	6'-6	2	#6	6'-9	2	#7	8'-0	2	#7	8'-3	3	#7	8'-6	3	#7	8'-9	3	#8	9'-6	3	#8	9'-9	3	#8	10'-0
e9	C	12	#5	6'-0	13	#6	6'-6	13	#6	6'-9	14	#7	8'-0	14	#7	8'-3	15	#7	8'-6	15	#7	8'-9	16	#8	9'-6	16	#8	9'-9	17	#8	10'-0
e10	C	5	#5	6'-0	5	#6	6'-6	5	#6	6'-9	6	#7	8'-0	6	#7	8'-3	6	#7	8'-6	6	#7	8'-9	7	#8	9'-6	7	#8	9'-9	7	#8	10'-0
e11	C	3	#5	5'-9	3	#6	6'-3	3	#6	6'-6	3	#6	6'-9	3	#7	8'-0	3	#7	8'-3	4	#7	8'-6	4	#7	9'-0	4	#7	9'-3	4	#7	9'-6
e12	C	3	#5	5'-3	3	#5	5'-9	3	#5	6'-0	3	#6	6'-3	4	#6	6'-6	4	#6	6'-9	4	#7	7'-9	4	#7	8'-3	4	#7	8'-6	4	#7	8'-9
e13	C	3	#5	4'-9	3	#5	5'-0	3	#5	5'-3	4	#5	5'-9	4	#6	5'-9	4	#6	6'-0	4	#6	6'-3	4	#6	6'-6	4	#7	7'-9	5	#7	8'-0
e14	C	3	#5	4'-6	3	#5	4'-6	4	#5	4'-9	4	#5	5'-0	4	#5	5'-3	4	#5	5'-6	4	#5	5'-9	4	#6	5'-9	5	#6	6'-0	5	#6	6'-3
e15	C	3	#5	4'-0	4	#5	4'-0	4	#5	4'-3	4	#5	4'-6	4	#5	4'-6	4	#5	4'-9	4	#5	5'-0	5	#5	5'-0	5	#5	5'-3	5	#5	5'-6
f1	str	5	#4	7'-3	5	#4	7'-9	6	#4	8'-0	6	#4	8'-3	6	#4	8'-9	6	#4	9'-0	7	#4	9'-3	7	#4	9'-9	7	#4	10'-0	7	#4	10'-3
f2	str	5	#4	8'-3	5	#4	8'-6	5	#4	9'-0	6	#4	9'-3	6	#4	9'-6	6	#4	10'-0	6	#4	10'-3	7	#4	10'-9	7	#4	11'-3	7	#4	11'-6
f3	str	5	#4	9'-0	5	#4	9'-6	5	#4	9'-9	5	#4	10'-3	6	#4	10'-6	6	#4	11'-0	6	#4	11'-6	6	#4	12'-0	7	#4	12'-3	7	#4	12'-9
f4	str	4	#4	10'-0	5	#4	10'-3	5	#4	10'-9	5	#4	11'-3	5	#4	11'-6	6	#4	12'-0	6	#4	12'-6	6	#4	13'-0	6	#4	13'-6	7	#4	14'-0
f5	str	3	#4	6'-6	3	#4	6'-9	3	#4	7'-0	3	#4	7'-3	3	#4	7'-6	4	#4	7'-9	4	#4	8'-0	4	#4	8'-3	4	#4	8'-6	4	#4	8'-9
f6	str	3	#4	7'-9	3	#4	8'-0	3	#4	8'-3	3	#4	8'-6	3	#4	8'-9	3	#4	9'-0	4	#4	9'-6	4	#4	9'-9	4	#4	10'-3	4	#4	11'-6
f7	str	2	#4	8'-9	2	#4	9'-0	3	#4	9'-6	3	#4	9'-9	3	#4	10'-3	3	#4	10'-6	3	#4	11'-0	3	#4	11'-6	4	#4	11'-9	4	#4	12'-0
f8	str	2	#4	10'-0	2	#4	10'-3	2	#4	10'-9	3	#4	11'-0	3	#4	11'-6	3	#4	11'-9	3	#4	12'-6	3	#4	13'-0	3	#4	13'-6	4	#4	13'-9
g	str	2	#4	11'-6	2	#4	12'-3	2	#4	12'-9	2	#4	13'-6	2	#4	14'-3	2	#4	15'-0	2	#4	15'-9	2	#4	16'-3	2	#4	17'-0	2	#4	17'-9
m1	str	4	#4	29'-9	4	#4	31'-3	4	#4	33'-0	5	#4	34'-6	5	#4	36'-0	5	#4	37'-9	5	#4	39'-3	6	#4	40'-9	6	#4	42'-6	6	#4	44'-0
m2	str	1	#4	29'-9	1	#4	31'-3	1	#4	33'-0	1	#4	34'-6	1	#4	36'-0	1	#4	37'-9	1	#4	39'-3	1	#4	40'-9	1	#4	42'-6	1	#4	44'-0
m3	str	4	#4	20'-0	4	#4	21'-3	4	#4	22'-6	5	#4	24'-0	5	#4	25'-3	5	#4	26'-6	5	#4	27'-9	6	#4	29'-3	6	#4	30'-6	6	#4	31'-9
m4	str	1	#4	20'-0	1	#4	21'-3	1	#4	22'-6	1	#4	24'-0	1	#4	25'-3	1	#4	26'-6	1	#4	27'-9	1	#4	29'-3	1	#4	30'-6	1	#4	31'-9
n1	str	4	#4	18'-9	4	#4	20'-0	4	#4	21'-0	5	#4	22'-0	5	#4	23'-0	5	#4	24'-3	5	#4	25'-3	6	#4	26'-3	6	#4	27'-6	6	#4	28'-6
n2	str	1	#4	18'-9	1	#4	20'-0	1	#4	21'-0	1	#4	22'-0	1	#4	23'-0	1	#4	24'-3	1	#4	25'-3	1	#4	26'-3	1	#4	27'-6	1	#4	28'-6
p	str	4	#5	13'-9	4	#5	14'-6	4	#5	15'-3	4	#5	16'-0	4	#5	16'-9	4	#5	17'-6	4	#5	18'-3	4	#5	19'-3	4	#5	20'-0	4	#5	20'-9
q	str	2	#6	15'-9	2	#6	16'-6	2	#6	17'-3	2	#6	18'-0	2	#6	18'-9	2	#6	19'-6	2	#6	20'-3	2	#6	21'-3	2	#6	22'-0	2	#6	22'-9
u	B	8	#4	5'-0	9	#4	5'-0	10	#4	5'-0	10	#4	5'-0	11	#4	5'-0	11	#4	5'-0	12	#4	5'-0	12	#4	5'-0	13	#4	5'-0	13	#4	5'-0
v	str	1	#4	29'-0	1	#4	30'-6	1	#4	32'-0	1	#4	33'-6	1	#4	35'-0	1	#4	36'-6	1	#4	38'-0	1	#4	39'-6	1	#4	41'-0	1	#4	42'-6
w	str	1	#4	14'-6	1	#4	15'-6	1	#4	16'-6	1	#4	17'-6	1	#4	18'-6	1	#4	19'-6	1	#4	20'-6	1	#4	21'-6	1	#4	22'-6	1	#4	23'-6

Pipe Diameter

	90"	96"	102"	108"	114"	120"	126"	132"	138"	144"
A	0'- 3	0'- 3	0'- 3	0'- 3	0'- 3	0'- 3	0'- 3	0'- 3	0'- 3	0'- 3
B	2'- 2	2'- 2	2'- 3	2'- 3	2'- 4	2'- 4	2'- 5	2'- 5	2'- 6	2'- 6
C	2'- 1	2'- 3	2'- 4	2'- 6	2'- 7	2'- 9	2'-10	3'- 0	3'- 1	3'- 3
D	2'- 1	2'- 3	2'- 5	2'- 7	2'- 9	2'-11	3'- 1	3'- 3	3'- 5	3'- 7
E	6'- 4	6'- 8	7'- 0	7'- 4	7'- 8	8'- 0	8'- 4	8'- 8	9'- 0	9'- 4
F	28'- 0	29'- 6	31'- 0	32'- 6	34'- 0	35'- 6	37'- 0	38'- 6	40'- 0	41'- 6
G	6'- 5⅝	6'- 9⅞	7'- 2⅛	7'- 6⅜	7'-10⅝	8'- 2⅞	8'- 7⅛	8'-11⅜	9'- 3⅝	9'- 7⅞
H	9'- 6	10'- 0	10'- 6	11'- 0	11'- 6	12'- 0	12'- 6	13'- 0	13'- 6	14'- 0
J	6'- 4	6'- 8	7'- 0	7'- 4	7'- 8	8'- 0	8'- 4	8'- 8	9'- 0	9'- 4
K	30'- 1¾	31'- 8⅝	33'- 3¼	34'-10⅛	36'- 4⅞	37'-11¾	39'- 6⅞	41'- 1¾	42'- 8⅜	44'- 3¼
L	7'- 7⅜	8'- 0½	8'- 5⅜	8'-10½	9'- 3½	9'- 8⅝	10'- 2	10'- 7⅛	11'- 0	11'- 5⅛
M	6'- 2½	6'- 6¾	6'-10¾	7'- 3	7'- 7⅛	7'-11¼	8'- 3¾	8'- 8	9'- 0	9'- 4¼
N	0'- 3	0'- 6	0'- 3	0'- 6	0'- 3	0'- 6	0'- 3	0'- 6	0'- 3	0'- 6
P	11'- 7⅝	12'- 3⅞	12'-11⅛	13'- 7⅜	14'- 2⅝	14'-10⅞	15'- 8⅛	16'- 4⅜	16'-11⅝	17'- 7⅞
R	14'- 0	15'- 0	16'- 0	17'- 0	18'- 0	19'- 0	20'- 0	21'- 0	22'- 0	23'- 0
S	5'- 6	5'- 9	6'- 0	6'- 3	6'- 6	6'- 9	7'- 0	7'- 3	7'- 6	7'- 9
T	20'- 2	21'- 6	22'- 9	24'- 1	25'- 4	26'- 8	28'- 1	29'- 5	30'- 8	32'- 0
V	5'- 3⅝	5'- 7⅞	5'-11⅛	6'- 3⅜	6'- 6⅝	6'-10⅞	7'- 4⅛	7'- 8⅜	7'-11⅝	8'- 3⅞
W	7'- 5⅝	7'- 9⅞	8'- 2⅛	8'- 6⅜	8'-10⅝	9'- 2⅞	9'- 9⅛	10'- 1⅜	10'- 5⅝	10'- 9⅞
X	6'- 4	6'- 8¼	7'- 0½	7'- 4¾	7'- 9	8'- 1¼	8'-10¼	9'- 2½	9'- 6⅝	9'-10⅞

QUANTITIES

PIPE Dia.	REINF Lbs.	CONCRETE C.Y.
90"	1925	36.9
96"	2175	40.8
102"	2485	44.8
108"	2970	49.0
114"	3385	53.3
120"	3690	57.9
126"	4005	66.6
132"	4750	71.9
138"	5235	77.3
144"	5850	83.0

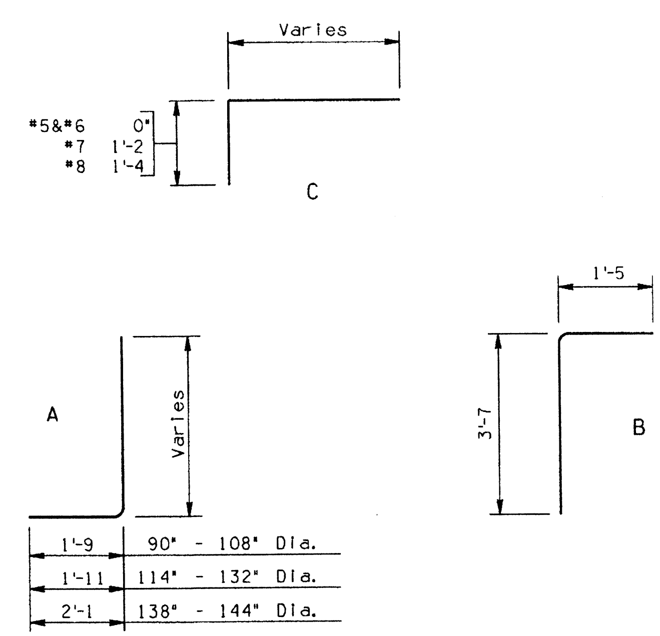

BENDS

NOTE:
Quantities and steel list shown are for one headwall.

DESIGN	K.W.	2-92	NO	DESCRIPTION OF REVISIONS	MADE BY	DATE
DRAWN	J.W.	4-92	1			
CHECKED	G.K.	4-92	2			
			3			
			4			

Registered Professional Engineer (Civil) CERTIFICATE NO. 9910 F. DANIEL DAVIS Arizona U.S.A.

DESIGN APPROVED

APPROVED FOR DISTRIBUTION

ARIZONA
DEPARTMENT OF TRANSPORTATION
HIGHWAYS DIVISION
STANDARD DRAWINGS

INLET HEADWALLS
45° SKEW PIPE CULVERT
4:1 SLOPE

REVISION 4-92

STANDARD NO. B-15.30

STEEL LIST

Mark	Bend	90" Dia.			96" Dia.			102" Dia.			108" Dia.			114" Dia.			120" Dia.			126" Dia.			132" Dia.			138" Dia.			144" Dia.		
		No	Size	Lgth	No	Size	Lgth	No	Size	Lgth	No	Size	Lgth	No	Size	Lgth	No	Size	Lgth	No	Size	Lgth	No	Size	Lgth	No	Size	Lgth	No	Size	Lgth
a1	A	6	#5	9'-6	6	#5	10'-0	6	#5	10'-3	6	#5	10'-9	7	#5	11'-3	7	#6	11'-9	7	#5	12'-3	7	#6	12'-6	7	#6	13'-3	8	#7	13'-6
a2	A	6	#5	10'-0	6	#5	10'-6	6	#5	10'-6	6	#5	11'-0	6	#6	11'-9	7	#6	12'-3	7	#6	12'-9	7	#6	13'-0	7	#7	13'-9	7	#7	14'-0
a3	A	5	#5	10'-3	6	#5	10'-9	6	#5	11'-0	6	#6	11'-6	6	#6	12'-3	6	#6	12'-9	7	#6	13'-3	7	#7	13'-6	7	#7	14'-3	7	#7	14'-6
a4	A	5	#5	10'-9	5	#6	11'-3	6	#6	11'-6	6	#6	12'-0	6	#7	12'-9	6	#7	13'-0	7	#7	13'-6	7	#7	14'-0	7	#7	14'-9	7	#7	15'-0
a5	A	5	#5	11'-3	5	#6	11'-9	6	#6	12'-0	6	#7	12'-6	6	#7	13'-3	6	#7	13'-6	6	#7	14'-0	7	#7	14'-6	7	#7	15'-3	7	#8	15'-9
a6	A	5	#6	11'-6	5	#6	12'-0	5	#6	12'-6	6	#7	13'-0	6	#7	13'-9	6	#7	14'-0	6	#7	14'-6	6	#7	15'-0	7	#8	15'-9	7	#8	16'-3
a7	A	5	#6	12'-0	5	#6	12'-6	5	#7	13'-0	5	#7	13'-6	6	#7	14'-3	6	#7	14'-6	6	#7	15'-0	6	#8	15'-6	7	#8	16'-3	7	#8	16'-9
a8	A	4	#5	9'-3	4	#5	9'-6	4	#5	9'-9	5	#5	10'-3	5	#5	10'-9	5	#5	11'-0	5	#5	11'-3	5	#5	11'-9	6	#6	12'-3	6	#6	12'-6
a9	A	4	#5	10'-0	4	#5	10'-3	4	#5	10'-6	4	#5	11'-0	5	#6	11'-6	5	#6	11'-9	5	#6	12'-3	5	#6	12'-6	5	#6	13'-3	6	#7	13'-6
a10	A	4	#5	10'-6	4	#5	11'-0	4	#6	11'-6	4	#6	11'-9	4	#6	12'-3	5	#7	12'-9	5	#7	13'-0	5	#7	13'-6	5	#7	14'-0	5	#7	14'-6
a11	A	3	#6	11'-3	4	#6	11'-9	4	#6	12'-3	4	#7	12'-6	4	#7	13'-3	4	#7	13'-6	5	#7	14'-0	5	#7	14'-3	5	#7	15'-0	5	#8	15'-6
a12	A	3	#6	12'-0	3	#6	12'-6	4	#7	13'-0	4	#7	13'-3	4	#7	14'-0	4	#7	14'-6	4	#7	15'-0	5	#8	15'-3	5	#8	16'-0	5	#8	16'-6
b1	str	2	#4	36'-0	2	#4	37'-6	2	#4	39'-0	2	#4	40'-6	2	#4	42'-0	2	#4	43'-6	2	#4	45'-0	2	#4	46'-6	2	#4	48'-0	2	#4	49'-6
b2	str	8	#4	36'-0	10	#4	37'-6	10	#4	39'-0	10	#4	40'-6	10	#4	42'-0	12	#4	43'-6	12	#4	45'-0	12	#4	46'-6	14	#4	48'-0	14	#4	49'-6
b3	str	2	#4	32'-0	2	#4	19'-0	2	#4	25'-0	2	#4	32'-0	2	#4	37'-0	2	#4	25'-0	2	#4	32'-0	2	#4	39'-6	2	#4	27'-0	2	#4	36'-0
b4	str	2	#4	11'-0				2	#4	6'-0	2	#4	13'-0	2	#4	18'-6	2	#4	5'-0	2	#4	12'-0	2	#4	19'-0	2	#4	6'-6	2	#4	14'-0
b5	str																														
b6	str																														
b7	str	2	#4	17'-0	2	#4	18'-0	2	#4	19'-0	2	#4	20'-0	2	#4	21'-0	2	#4	22'-0	2	#4	23'-0	2	#4	24'-0	2	#4	25'-0	2	#4	26'-0
b8	str	8	#4	17'-0	8	#4	18'-0	8	#4	19'-0	10	#4	20'-0	10	#4	21'-0	10	#4	22'-0	10	#4	23'-0	10	#4	24'-0	12	#4	25'-0	12	#4	26'-0
b9	str	2	#4	12'-6	2	#4	16'-0	2	#4	18'-0	2	#4	13'-0	2	#4	16'-0	2	#4	19'-0	2	#4	21'-3	2	#4	23'-6	2	#4	19'-0	2	#4	21'-3
b10	str	2	#4	4'-0	2	#4	7'-0	2	#4	10'-6	2	#4	4'-6	2	#4	8'-0	2	#4	11'-0	2	#4	13'-0	2	#4	15'-3	2	#4	10'-6	2	#4	13'-3
b11	str							2	#4	1'-6							2	#4	3'-0	2	#4	5'-0	2	#4	7'-3	2	#4	2'-3	2	#4	5'-0
b12	str																														
c	str	4	#4	10'-6	4	#4	11'-0	4	#4	11'-6	4	#4	12'-0	4	#4	12'-6	4	#4	13'-0	4	#4	13'-6	4	#4	14'-0	4	#4	14'-6	4	#4	15'-0
d	A	6	#6	12'-3	6	#6	12'-9	6	#6	13'-3	6	#7	13'-9	6	#7	14'-6	6	#7	15'-0	6	#7	15'-6	6	#8	16'-0	6	#8	16'-6	6	#8	17'-0
e1	C	8	#5	4'-3	7	#5	4'-3	7	#5	4'-6	7	#5	4'-9	6	#5	4'-9	7	#5	5'-0	7	#5	5'-3	7	#6	5'-3	7	#6	5'-6	8	#6	5'-9
e2	C	7	#5	4'-6	7	#5	4'-6	7	#5	4'-9	7	#5	5'-0	6	#5	5'-0	7	#5	5'-3	7	#6	5'-6	7	#6	5'-9	7	#6	6'-0	7	#6	6'-3
e3	C	7	#5	4'-9	6	#5	4'-9	7	#5	5'-0	7	#5	5'-3	6	#5	5'-3	6	#6	5'-6	7	#6	6'-0	7	#6	6'-3	7	#7	7'-0	7	#7	7'-3
e4	C	7	#5	5'-0	6	#5	5'-0	6	#5	5'-3	7	#6	5'-6	6	#6	5'-6	6	#6	5'-9	6	#6	6'-3	7	#7	7'-6	7	#7	7'-6	7	#7	7'-9
e5	C	7	#5	5'-3	6	#5	5'-3	6	#6	5'-6	7	#6	5'-9	6	#6	6'-0	6	#6	6'-3	6	#7	7'-3	7	#7	8'-0	7	#7	8'-3	7	#7	8'-0
e6	C				6	#6	5'-6	6	#6	5'-9	6	#6	6'-0	6	#6	6'-3	6	#7	7'-3	6	#7	7'-9	6	#7	8'-6	7	#8	8'-6	7	#8	8'-9
e7	C													6	#7	7'-3	6	#7	7'-6	6	#7	8'-0	6	#7	8'-3	6	#8	8'-9	7	#8	9'-0
e8	C	2	#5	5'-3	2	#6	5'-6	2	#6	6'-0	2	#6	6'-3	2	#7	7'-6	3	#7	8'-0	3	#7	8'-3	3	#7	8'-6	3	#8	9'-0	3	#8	9'-6
e9	C	12	#5	5'-3	13	#6	5'-6	13	#6	6'-0	14	#6	6'-3	14	#7	7'-6	15	#7	8'-0	15	#7	8'-3	16	#7	8'-6	16	#8	9'-0	17	#8	9'-6
e10	C	5	#5	5'-3	5	#6	5'-6	5	#6	6'-0	6	#6	6'-3	6	#7	7'-6	6	#7	8'-0	6	#7	8'-3	7	#7	8'-6	7	#8	9'-0	7	#8	9'-6
e11	C	3	#5	5'-3	3	#5	5'-6	3	#5	5'-9	4	#6	6'-0	4	#6	6'-6	4	#6	6'-9	4	#6	7'-0	4	#6	7'-3	5	#7	8'-6	5	#7	8'-9
e12	C	3	#5	5'-0	3	#5	5'-3	4	#5	5'-6	4	#5	5'-9	4	#6	6'-0	4	#6	6'-3	4	#6	6'-6	5	#6	6'-9	5	#6	7'-3	5	#6	7'-6
e13	C	3	#5	4'-9	4	#5	4'-9	4	#5	5'-0	4	#5	5'-3	4	#5	5'-9	4	#5	6'-0	5	#5	6'-3	5	#6	6'-3	5	#6	6'-6	5	#6	6'-9
e14	C	4	#5	4'-6	4	#5	4'-6	4	#5	4'-9	4	#5	5'-0	4	#5	5'-3	5	#5	5'-6	5	#5	5'-9	5	#5	5'-9	5	#5	6'-0	5	#5	6'-3
e15	C	4	#5	4'-3	4	#5	4'-3	4	#5	4'-6	4	#5	4'-9	5	#5	4'-9	5	#5	5'-0	5	#5	5'-3	5	#5	5'-3	5	#5	5'-6	6	#5	5'-9
f1	str	6	#4	7'-9	7	#4	8'-0	7	#4	8'-6	7	#4	9'-0	7	#4	9'-3	8	#4	9'-9	8	#4	10'-3	8	#4	10'-6	8	#4	11'-0	9	#4	11'-6
f2	str	6	#4	8'-6	6	#4	8'-9	7	#4	9'-3	7	#4	9'-9	7	#4	10'-0	7	#4	10'-6	8	#4	11'-0	8	#4	11'-6	8	#4	11'-9	8	#4	12'-3
f3	str	6	#4	9'-3	6	#4	9'-9	6	#4	10'-0	7	#4	10'-6	7	#4	11'-0	7	#4	11'-6	7	#4	12'-0	8	#4	12'-3	8	#4	12'-9	8	#4	13'-3
f4	str	6	#4	10'-0	6	#4	10'-6	6	#4	10'-9	6	#4	11'-3	7	#4	11'-9	7	#4	12'-3	7	#4	12'-9	7	#4	13'-3	8	#4	13'-6	8	#4	14'-0
f5	str	3	#4	7'-3	3	#4	7'-9	4	#4	8'-0	4	#4	8'-3	4	#4	8'-9	4	#4	9'-0	4	#4	9'-3	4	#4	9'-9	5	#4	10'-0	5	#4	10'-3
f6	str	3	#4	8'-3	3	#4	8'-9	3	#4	9'-0	4	#4	9'-3	4	#4	9'-9	4	#4	10'-0	4	#4	10'-6	4	#4	10'-9	4	#4	11'-3	5	#4	11'-6
f7	str	3	#4	9'-0	3	#4	9'-6	3	#4	10'-0	3	#4	10'-6	3	#4	11'-0	4	#4	11'-3	4	#4	11'-6	4	#4	12'-0	4	#4	12'-3	4	#4	12'-9
f8	str	3	#4	10'-0	3	#4	10'-6	3	#4	11'-0	3	#4	11'-6	3	#4	12'-0	3	#4	12'-3	4	#4	12'-9	4	#4	13'-0	4	#4	13'-6	4	#4	14'-0
g	str	2	#4	11'-6	2	#4	12'-3	2	#4	12'-9	2	#4	13'-6	2	#4	14'-3	2	#4	15'-0	2	#4	15'-9	2	#4	16'-3	2	#4	17'-0	2	#4	17'-9
m1	str	4	#4	37'-9	4	#4	39'-3	4	#4	40'-9	5	#4	42'-6	5	#4	44'-0	5	#4	45'-6	5	#4	47'-0	6	#4	48'-6	6	#4	50'-3	6	#4	51'-9
m2	str	1	#4	37'-9	1	#4	39'-3	1	#4	40'-9	1	#4	42'-6	1	#4	44'-0	1	#4	45'-6	1	#4	47'-0	1	#4	48'-6	1	#4	50'-3	1	#4	51'-9
m3	str	4	#4	22'-3	4	#4	23'-6	4	#4	24'-9	5	#4	26'-3	5	#4	27'-6	5	#4	28'-9	5	#4	30'-0	6	#4	31'-3	6	#4	32'-9	6	#4	34'-0
m4	str	1	#4	22'-3	1	#4	23'-6	1	#4	24'-9	1	#4	26'-3	1	#4	27'-6	1	#4	28'-9	1	#4	30'-0	1	#4	31'-3	1	#4	32'-9	1	#4	34'-0
n1	str	4	#4	18'-0	4	#4	19'-0	4	#4	20'-3	5	#4	21'-3	5	#4	22'-6	5	#4	23'-6	5	#4	24'-9	6	#4	25'-9	6	#4	26'-9	6	#4	28'-0
n2	str	1	#4	18'-0	1	#4	19'-0	1	#4	20'-3	1	#4	21'-3	1	#4	22'-6	1	#4	23'-6	1	#4	24'-9	1	#4	25'-9	1	#4	26'-9	1	#4	28'-0
p	str	4	#5	13'-9	4	#5	14'-6	4	#5	15'-3	4	#5	16'-0	4	#5	16'-9	4	#5	17'-6	4	#5	18'-3	4	#5	19'-3	4	#5	20'-0	4	#5	20'-9
q	str	2	#6	15'-9	2	#6	16'-6	2	#6	17'-3	2	#6	18'-0	2	#6	18'-9	2	#6	19'-6	2	#6	20'-3	2	#6	21'-3	2	#6	22'-0	2	#6	22'-9
u	B	9	#4	5'-0	9	#4	5'-0	10	#4	5'-0	10	#4	5'-0	11	#4	5'-0	11	#4	5'-0	12	#4	5'-0	12	#4	5'-0	13	#4	5'-0	13	#4	5'-0
v	str	1	#4	37'-3	1	#4	38'-9	1	#4	40'-3	1	#4	41'-9	1	#4	43'-3	1	#4	44'-9	1	#4	46'-3	1	#4	47'-9	1	#4	49'-3	1	#4	50'-9
w	str	1	#4	17'-0	1	#4	18'-0	1	#4	19'-0	1	#4	20'-0	1	#4	21'-0	1	#4	22'-0	1	#4	23'-0	1	#4	24'-0	1	#4	25'-0	1	#4	26'-0

Pipe Diameter

	90"	96"	102"	108"	114"	120"	126"	132"	138"	144"
A	0'- 3	0'- 3	0'- 3	0'- 3	0'- 3	0'- 3	0'- 3	0'- 3	0'- 3	0'- 3
B	2'- 2	2'- 2	2'- 3	2'- 3	2'- 4	2'- 4	2'- 5	2'- 5	2'- 6	2'- 6
C	2'- 4	2'- 6	2'- 7	2'- 9	2'-10	3'- 0	3'- 1	3'- 3	3'- 4	3'- 6
D	1'- 2	1'- 4	1'- 6	1'- 8	1'-10	2'- 0	2'- 2	2'- 4	2'- 6	2'- 8
E	5'- 8	6'- 0	6'- 4	6'- 8	7'- 0	7'- 4	7'- 8	8'- 0	8'- 4	8'- 8
F	36'- 0	37'- 6	39'- 0	40'- 6	42'- 0	43'- 6	45'- 0	46'- 6	48'- 0	49'- 6
G	6'- 5⅝	6'- 9⅞	7'- 2⅛	7'- 6⅜	7'-10⅝	8'- 2⅞	8'- 7⅛	8'-11⅜	9'- 3⅝	9'- 7⅞
H	9'- 6	10'- 0	10'- 6	11'- 0	11'- 6	12'- 0	12'- 6	13'- 0	13'- 6	14'- 0
J	6'- 8	7'- 1	7'- 6	7'-11	8'- 4	8'- 9	9'- 2	9'- 7	10'- 0	10'- 5
K	38'- 0	39'- 6⅞	41'- 1½	42'- 8⅜	44'- 3⅛	45'-10	47'- 5⅛	49'- 0	50'- 6⅝	52'- 1½
L	7'- 5⅝	7'-10¾	8'- 3⅝	8'- 8¾	9'- 1⅝	9'- 6⅞	10'- 0⅛	10'- 5¼	10'-10¼	11'- 3⅜
M	6'- 2½	6'- 6¾	6'-10¾	7'- 3	7'- 7⅛	7'-11¼	8'- 3¾	8'- 8	9'- 0	9'- 4¼
N	0'- 3	0'- 6	0'- 3	0'- 6	0'- 3	0'- 6	0'- 3	0'- 6	0'- 3	0'- 6
P	10'-11⅝	11'- 7⅞	12'- 3⅛	12'-11⅜	13'- 6⅝	14'- 2⅞	15'- 0⅛	15'- 8⅜	16'- 3⅝	16'-11⅞
R	17'- 0	18'- 0	19'- 0	20'- 0	21'- 0	22'- 0	23'- 0	24'- 0	25'- 0	26'- 0
S	6'- 4	6'- 8	7'- 0	7'- 4	7'- 8	8'- 0	8'- 4	8'- 8	9'- 0	9'- 4
T	22'- 6	23'-10	25'- 1	26'- 5	27'- 8	29'- 0	30'- 5	31'- 9	33'- 0	34'- 4
V	5'- 3⅝	5'- 7⅞	5'-11⅛	6'- 3⅜	6'- 6⅝	6'-10⅞	7'- 4⅛	7'- 8⅜	7'-11⅝	8'- 3⅞
W	7'- 5⅝	7'- 9⅞	8'- 2⅛	8'- 6⅜	8'-10⅝	9'- 2⅞	9'- 9⅛	10'- 1⅜	10'- 5⅝	10'- 9⅞
X	6'- 4	6'- 8¼	7'- 0½	7'- 4¾	7'- 9	8'- 1¼	8'-10¼	9'- 2½	9'- 6⅝	9'-10⅞

QUANTITIES

PIPE Dia.	REINF Lbs.	CONCRETE C.Y.
90"	2290	42.5
96"	2585	46.7
102"	2900	51.0
108"	3405	55.5
114"	3940	60.2
120"	4340	65.2
126"	4655	75.1
132"	5375	80.8
138"	6215	86.7
144"	6780	92.8

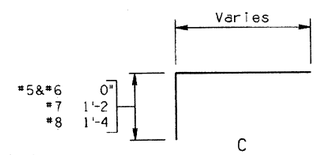

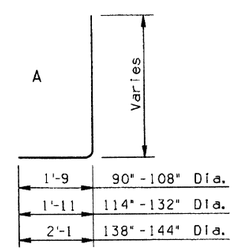

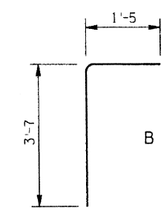

BENDS

NOTE:
Quantities and steel list shown are for one headwall.

DESIGN	K. W.	2-92	NO	DESCRIPTION OF REVISIONS	MADE BY	DATE
DRAWN	J. W.	4-92	1			
CHECKED	G. K.	4-92	2			
			3			
			4			

Registered Professional Engineer (Civil) CERTIFICATE NO. 9910 F. DANIEL DAVIS Date Signed 5-8-92 Arizona U.S.A.	DESIGN APPROVED F. Daniel Davis	ARIZONA DEPARTMENT OF TRANSPORTATION HIGHWAYS DIVISION STANDARD DRAWINGS	REVISION 4-92
	APPROVED FOR DISTRIBUTION	INLET HEADWALLS 45° SKEW PIPE CULVERT 6:1 SLOPE	STANDARD NO. B-15.40

ZF1:(051020)SB1540.DGN1 VIEW NAME:
08-MAY-1992 09:32

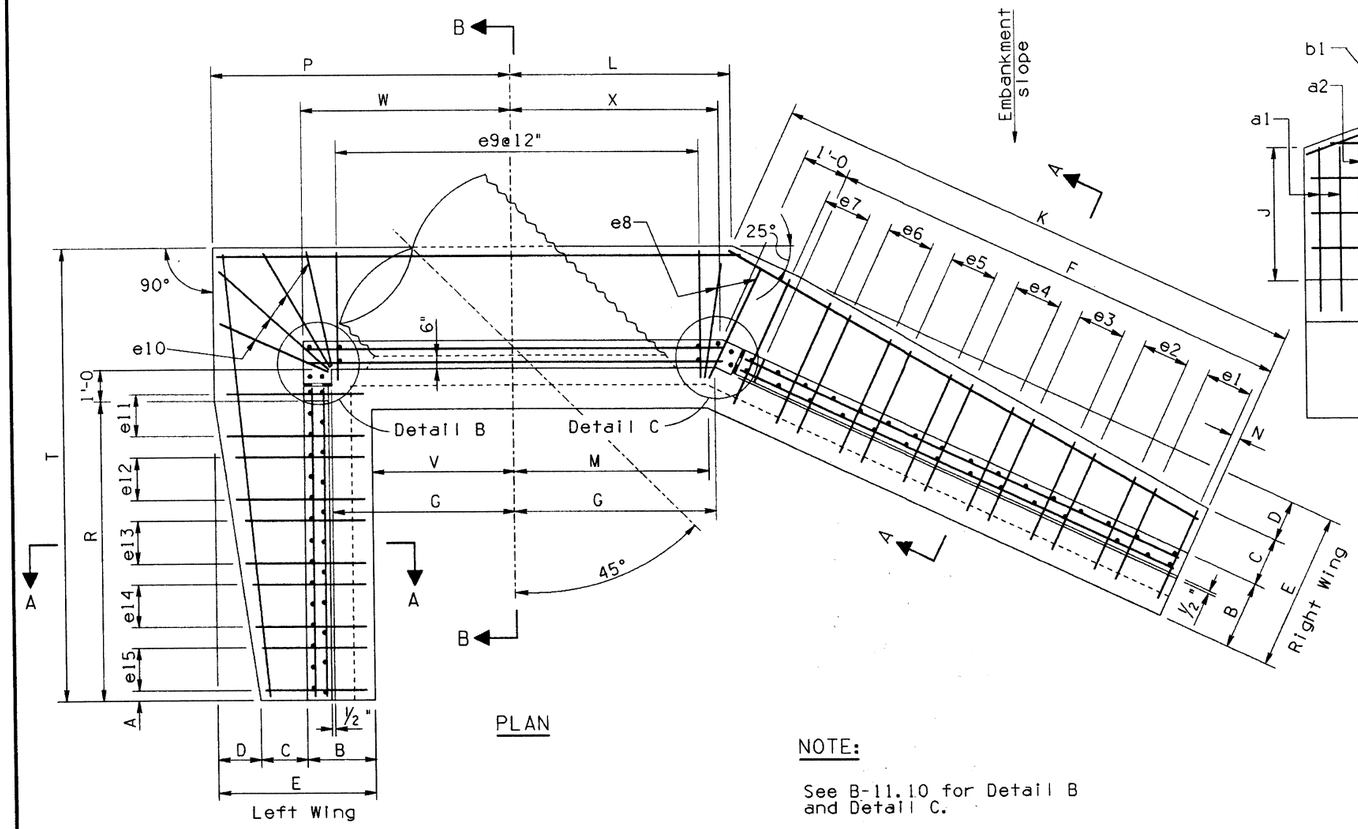

PLAN

NOTE:

See B-11.10 for Detail B and Detail C.

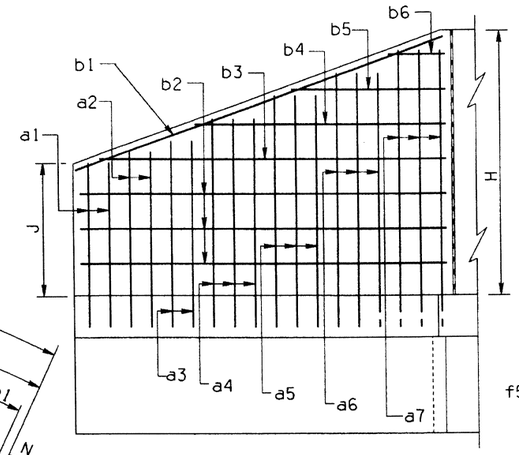

Back Face

RIGHT WING ELEVATION

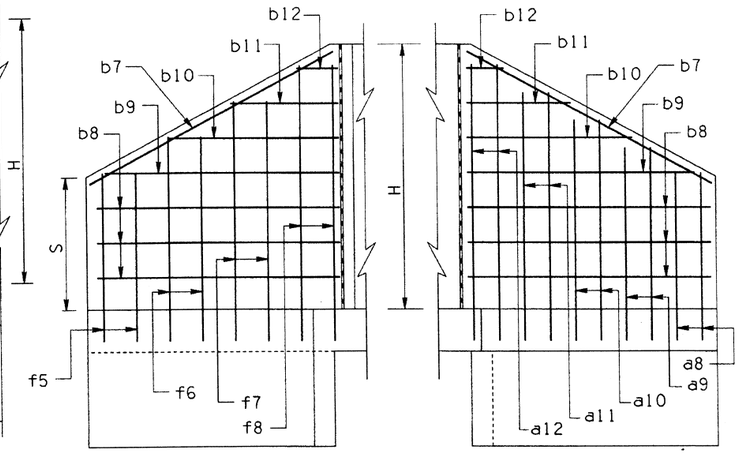

Front Face Back Face

LEFT WING ELEVATION

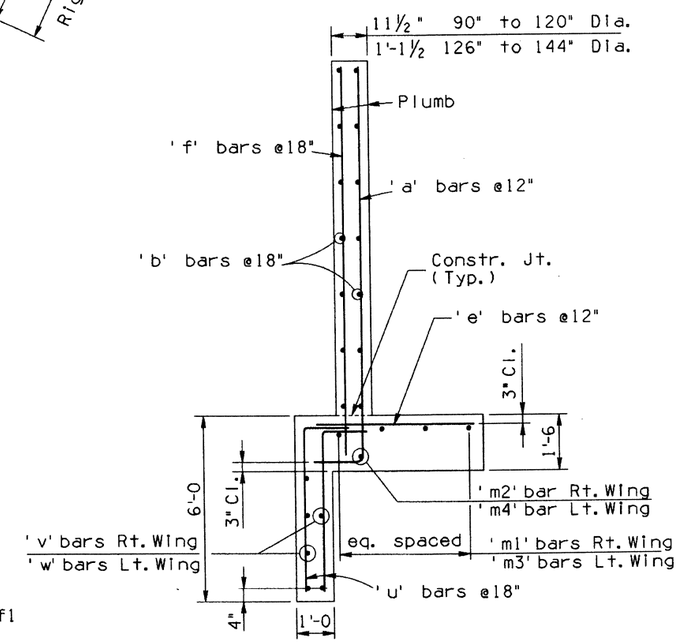

SECTION A-A

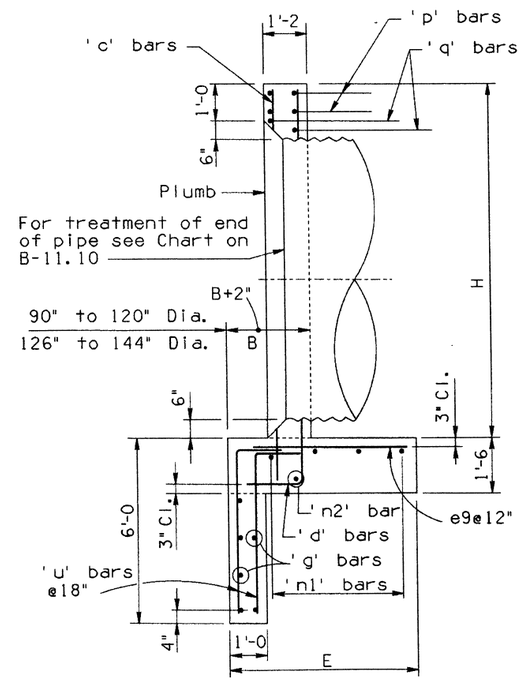

SECTION B-B

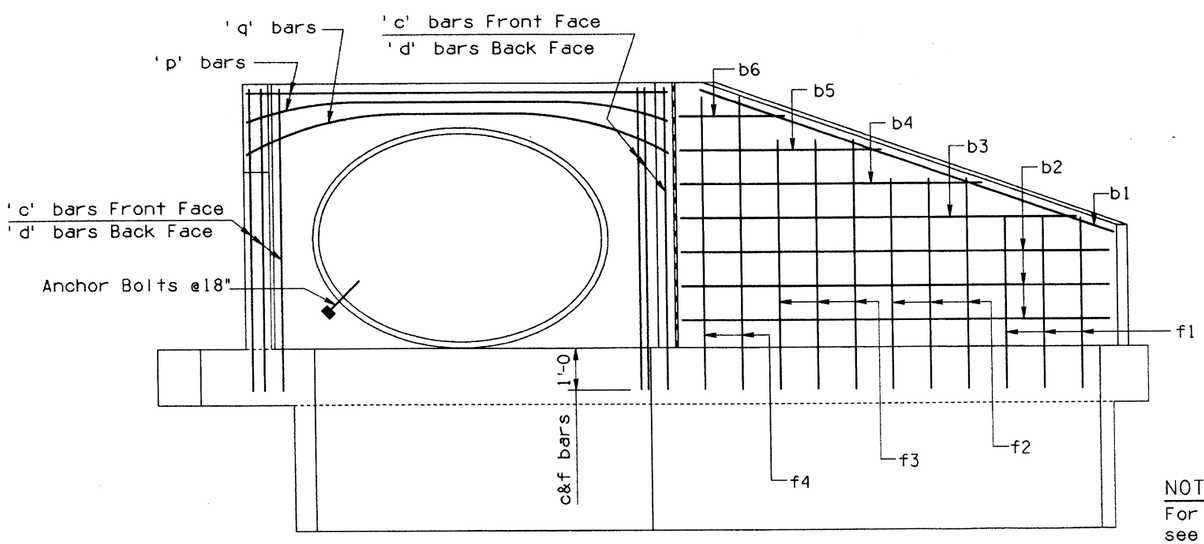

ELEVATION

NOTES:

For General Notes and Misc. Details see B-11.10. For steel list and bend diagrams see B-15.60, B-15.70 or B-15.80.

DESIGN	K.W.	2-92	NO	DESCRIPTION OF REVISIONS	MADE BY	DATE
DRAWN	J.M.	4-92	1			
CHECKED	G.K.	4-92	2			
			3			
			4			

DESIGN APPROVED	ARIZONA DEPARTMENT OF TRANSPORTATION HIGHWAYS DIVISION STANDARD DRAWINGS	REVISION
APPROVED FOR DISTRIBUTION	OUTLET HEADWALLS 45° SKEW PIPE CULVERT	STANDARD NO. B-15.50

REGISTERED PROFESSIONAL ENGINEER (CIVIL) 9910 F. DANIEL DAVIS ARIZONA U.S.A.

ZF1:[051020]SB1550.DGN;1 VIEW NAME:
08-MAY-1992 09:41

STEEL LIST

Mark	Bend	90" Dia. No	90" Dia. Size	90" Dia. Lgth	96" Dia. No	96" Dia. Size	96" Dia. Lgth	102" Dia. No	102" Dia. Size	102" Dia. Lgth	108" Dia. No	108" Dia. Size	108" Dia. Lgth	114" Dia. No	114" Dia. Size	114" Dia. Lgth
a1	A	4	#5	7'-0	4	#5	7'-3	4	#5	7'-6	4	#5	7'-9	4	#5	8'-3
a2	A	4	#5	7'-9	4	#5	8'-0	4	#5	8'-3	4	#5	8'-6	4	#5	9'-3
a3	A	3	#5	8'-6	4	#5	9'-0	4	#5	9'-3	4	#5	9'-6	4	#5	10'-3
a4	A	3	#5	9'-3	3	#5	9'-9	4	#5	10'-0	4	#5	10'-3	4	#5	11'-3
a5	A	3	#5	10'-3	3	#5	10'-6	3	#5	10'-9	4	#6	11'-3	4	#6	12'-0
a6	A	3	#5	11'-0	3	#6	11'-3	3	#6	11'-6	3	#6	12'-0	4	#7	13'-0
a7	A	3	#6	11'-9	3	#6	12'-3	3	#6	12'-6	3	#7	13'-0	3	#7	14'-0
a8	A	3	#5	6'-6	3	#5	6'-9	3	#5	7'-0	3	#5	7'-3	3	#5	7'-6
a9	A	3	#5	8'-3	3	#5	8'-6	3	#5	8'-9	3	#5	9'-0	3	#5	9'-0
a10	A	3	#5	10'-3	3	#5	10'-6	3	#5	10'-6	3	#6	10'-9	3	#6	10'-6
a11	A	2	#6	12'-0	2	#6	12'-3	3	#6	12'-3	3	#7	12'-6	2	#6	12'-0
a12	A													2	#7	13'-6
b1	str	2	#4	22'-6	2	#4	23'-6	2	#4	24'-6	2	#4	25'-6	2	#4	26'-6
b2	str	6	#4	22'-0	6	#4	23'-0	6	#4	24'-0	6	#4	25'-0	6	#4	26'-0
b3	str	2	#4	16'-9	2	#4	18'-9	2	#4	20'-6	2	#4	23'-0	2	#4	25'-0
b4	str	2	#4	10'-6	2	#4	12'-6	2	#4	14'-3	2	#4	16'-3	2	#4	18'-9
b5	str	2	#4	4'-3	2	#4	6'-3	2	#4	8'-3	2	#4	10'-3	2	#4	12'-6
b6	str							2	#4	2'-0	2	#4	4'-0	2	#4	6'-3
b7	str	2	#4	11'-6	2	#4	12'-0	2	#4	12'-6	2	#4	13'-0	2	#4	13'-9
b8	str	4	#4	10'-0	4	#4	10'-6	6	#4	11'-0	6	#4	11'-6	6	#4	12'-0
b9	str	2	#4	9'-3	2	#4	10'-3	2	#4	8'-3	2	#4	9'-0	2	#4	10'-3
b10	str	2	#4	6'-9	2	#4	7'-6	2	#4	5'-9	2	#4	6'-6	2	#4	7'-9
b11	str	2	#4	4'-0	2	#4	5'-0	2	#4	3'-6	2	#4	4'-3	2	#4	5'-3
b12	str	2	#4	1'-6	2	#4	2'-3	2	#4	1'-0	2	#4	1'-9	2	#4	2'-9
c	str	4	#4	10'-6	4	#4	11'-0	4	#4	11'-6	4	#4	12'-0	4	#4	12'-6
d	A	6	#6	12'-3	6	#6	12'-9	6	#6	13'-3	6	#7	13'-9	6	#7	14'-6
e1	C	4	#5	3'-6	4	#5	3'-9	4	#5	3'-9	4	#5	4'-0	4	#5	4'-0
e2	C	4	#5	4'-0	4	#5	4'-3	4	#5	4'-3	4	#5	4'-6	4	#5	4'-9
e3	C	3	#5	4'-6	4	#5	4'-9	4	#5	4'-9	4	#5	5'-3	4	#5	5'-3
e4	C	3	#5	5'-0	3	#5	5'-3	4	#5	5'-3	4	#6	5'-9	4	#6	5'-9
e5	C	3	#5	5'-6	3	#5	5'-9	3	#6	6'-0	4	#6	6'-3	4	#7	7'-6
e6	C	3	#5	6'-0	3	#6	6'-3	3	#7	7'-3	3	#7	7'-9	4	#7	8'-0
e7	C	3	#6	6'-6	3	#7	7'-6	3	#7	8'-0	3	#7	8'-3	3	#8	8'-9
e8	C	2	#6	6'-6	2	#7	8'-0	2	#7	8'-3	2	#7	8'-6	2	#8	9'-0
e9	C	11	#6	6'-6	12	#7	8'-0	13	#7	8'-3	13	#7	8'-6	14	#8	9'-0
e10	C	5	#6	6'-6	5	#7	8'-0	5	#7	8'-3	6	#7	8'-6	6	#8	9'-0
e11	C	2	#5	6'-6	2	#6	6'-9	3	#6	7'-0	3	#7	8'-3	2	#7	8'-6
e12	C	3	#5	5'-6	3	#5	5'-9	3	#5	6'-0	3	#6	6'-3	2	#6	7'-0
e13	C	3	#5	4'-6	3	#5	4'-9	3	#5	4'-9	3	#5	5'-3	3	#5	6'-0
e14	C	3	#5	3'-6	3	#5	3'-9	3	#5	3'-9	3	#5	4'-0	3	#5	5'-0
e15	C													3	#5	4'-0
f1	str	4	#4	5'-3	4	#4	5'-6	4	#4	5'-9	5	#4	6'-0	5	#4	6'-3
f2	str	4	#4	6'-9	4	#4	7'-0	4	#4	7'-3	4	#4	7'-6	5	#4	7'-9
f3	str	4	#4	8'-3	4	#4	8'-6	4	#4	8'-9	4	#4	9'-3	4	#4	9'-6
f4	str	3	#4	9'-9	4	#4	10'-0	4	#4	10'-3	4	#4	11'-0	4	#4	11'-3
f5	str	3	#4	4'-6	3	#4	4'-9	2	#4	5'-0	2	#4	5'-3	2	#4	5'-6
f6	str	2	#4	6'-9	2	#4	7'-3	2	#4	6'-9	2	#4	7'-0	2	#4	7'-6
f7	str	2	#4	9'-3	2	#4	9'-9	2	#4	8'-6	2	#4	8'-9	2	#4	9'-3
f8	str							2	#4	10'-6	2	#4	10'-9	2	#4	11'-3
g	str	6	#4	11'-6	6	#4	12'-3	6	#4	12'-9	6	#4	13'-6	6	#4	14'-3
m1	str	5	#4	24'-0	5	#4	25'-0	5	#4	26'-0	6	#4	27'-3	6	#4	28'-3
m2	str	1	#4	24'-0	1	#4	25'-0	1	#4	26'-0	1	#4	27'-3	1	#4	28'-3
m3	str	5	#4	16'-6	5	#4	17'-3	5	#4	18'-3	6	#4	19'-0	6	#4	19'-9
m4	str	1	#4	16'-6	1	#4	17'-3	1	#4	18'-3	1	#4	19'-0	1	#4	19'-9
n1	str	5	#4	20'-0	5	#4	21'-0	5	#4	22'-0	6	#4	23'-0	6	#4	24'-0
n2	str	1	#4	20'-0	1	#4	21'-0	1	#4	22'-0	1	#4	23'-0	1	#4	24'-0
p	str	4	#5	13'-9	4	#5	14'-6	4	#5	15'-3	4	#5	16'-0	4	#5	16'-9
q	str	2	#6	15'-9	2	#6	16'-6	2	#6	17'-3	2	#6	18'-0	2	#6	18'-9
u	B	60	#4	7'-0	62	#4	7'-0	66	#4	7'-0	68	#4	7'-0	72	#4	7'-0
v	str	6	#4	23'-0	6	#4	24'-0	6	#4	24'-9	6	#4	25'-9	6	#4	26'-6
w	str	6	#4	10'-3	6	#4	10'-9	6	#4	11'-3	6	#4	11'-9	6	#4	12'-3

Mark	Bend	120" Dia. No	120" Dia. Size	120" Dia. Lgth	126" Dia. No	126" Dia. Size	126" Dia. Lgth	132" Dia. No	132" Dia. Size	132" Dia. Lgth	138" Dia. No	138" Dia. Size	138" Dia. Lgth	144" Dia. No	144" Dia. Size	144" Dia. Lgth
a1	A	4	#5	8'-6	5	#5	8'-9	5	#5	9'-0	5	#5	9'-6	5	#5	9'-9
a2	A	4	#5	9'-6	4	#5	9'-9	5	#5	10'-0	5	#5	10'-6	5	#6	10'-9
a3	A	4	#5	10'-6	4	#5	10'-9	4	#5	11'-0	5	#6	11'-6	5	#6	12'-0
a4	A	4	#6	11'-6	4	#5	11'-9	4	#6	12'-0	4	#6	12'-9	5	#7	13'-0
a5	A	4	#7	12'-6	4	#6	13'-0	4	#7	13'-0	4	#7	13'-9	4	#7	14'-3
a6	A	4	#7	13'-6	4	#7	14'-0	4	#7	14'-3	4	#7	15'-0	4	#8	15'-3
a7	A	4	#7	14'-6	4	#7	15'-0	4	#8	15'-3	4	#8	16'-0	4	#8	16'-6
a8	A	3	#5	7'-9	3	#5	8'-0	3	#5	8'-3	3	#5	8'-9	3	#5	9'-0
a9	A	3	#5	9'-3	3	#5	9'-6	3	#5	9'-9	3	#5	10'-6	3	#5	10'-9
a10	A	3	#6	10'-9	3	#6	11'-3	3	#6	11'-6	3	#6	12'-3	3	#6	12'-6
a11	A	2	#7	12'-3	3	#7	12'-9	3	#7	13'-3	3	#7	13'-9	3	#7	14'-3
a12	A	2	#7	13'-9	2	#7	14'-3	2	#8	14'-6	3	#8	15'-6	3	#8	16'-0
b1	str	2	#4	27'-9	2	#4	28'-9	2	#4	29'-9	2	#4	30'-9	2	#4	31'-9
b2	str	8	#4	27'-0	8	#4	28'-0	8	#4	29'-0	8	#4	30'-0	8	#4	31'-0
b3	str	2	#4	20'-9	2	#4	23'-0	2	#4	24'-9	2	#4	26'-9	2	#4	28'-9
b4	str	2	#4	16'-6	2	#4	16'-9	2	#4	18'-6	2	#4	20'-6	2	#4	22'-6
b5	str	2	#4	8'-3	2	#4	10'-3	2	#4	12'-3	2	#4	14'-6	2	#4	16'-3
b6	str	2	#4	2'-0	2	#4	4'-0	2	#4	6'-6	2	#4	8'-3	2	#4	10'-0
b7	str	2	#4	14'-3	2	#4	14'-9	2	#4	15'-6	2	#4	16'-0	2	#4	16'-6
b8	str	6	#4	12'-6	6	#4	13'-0	6	#4	13'-6	8	#4	14'-0	8	#4	14'-6
b9	str	2	#4	11'-3	2	#4	12'-0	2	#4	13'-0	2	#4	11'-3	2	#4	12'-3
b10	str	2	#4	8'-9	2	#4	9'-3	2	#4	10'-3	2	#4	8'-9	2	#4	9'-9
b11	str	2	#4	6'-0	2	#4	6'-9	2	#4	7'-9	2	#4	6'-0	2	#4	7'-0
b12	str	2	#4	3'-6	2	#4	4'-0	2	#4	5'-0	2	#4	3'-6	2	#4	4'-6
c	str	4	#4	13'-0	4	#4	13'-6	4	#4	14'-0	4	#4	14'-6	4	#4	15'-0
d	A	6	#7	15'-0	6	#7	15'-6	6	#8	16'-0	6	#8	16'-6	6	#8	17'-0
e1	C	4	#5	4'-3	4	#5	4'-3	5	#5	4'-6	5	#5	4'-6	5	#5	4'-9
e2	C	4	#5	4'-9	4	#5	5'-0	4	#5	5'-3	5	#5	5'-3	5	#5	5'-6
e3	C	4	#5	5'-6	4	#5	5'-9	4	#6	6'-0	4	#6	6'-0	5	#6	6'-3
e4	C	4	#6	6'-0	4	#6	6'-3	4	#6	6'-6	4	#7	7'-6	4	#7	8'-0
e5	C	4	#7	7'-6	4	#7	8'-0	4	#7	8'-3	4	#7	8'-6	4	#8	9'-0
e6	C	4	#7	8'-3	4	#7	8'-6	4	#8	9'-0	4	#8	9'-3	4	#9	10'-3
e7	C	3	#8	9'-0	4	#8	9'-6	4	#9	10'-3	4	#9	10'-6	4	#9	10'-6
e8	C	2	#8	9'-6	2	#8	9'-9	2	#9	10'-6	2	#9	10'-9	2	#9	11'-3
e9	C	15	#8	9'-6	16	#8	9'-9	16	#9	10'-6	17	#9	10'-9	18	#9	11'-3
e10	C	6	#8	9'-6	6	#8	9'-9	7	#9	10'-6	7	#9	10'-9	7	#9	11'-3
e11	C	2	#7	8'-9	2	#7	9'-3	2	#8	9'-9	3	#8	10'-0	3	#8	10'-6
e12	C	2	#6	7'-0	3	#6	7'-6	3	#7	8'-6	3	#7	8'-9	3	#7	9'-3
e13	C	3	#5	6'-0	3	#5	6'-3	3	#6	6'-6	3	#6	6'-9	3	#6	7'-0
e14	C	3	#5	5'-3	3	#5	5'-3	3	#5	5'-6	3	#5	5'-9	3	#5	6'-0
e15	C	3	#5	4'-3	3	#5	4'-3	3	#5	4'-6	3	#5	4'-9	3	#5	4'-9
f1	str	5	#4	6'-6	5	#4	6'-9	5	#4	7'-0	5	#4	7'-3	6	#4	7'-6
f2	str	5	#4	8'-3	5	#4	8'-6	5	#4	8'-9	5	#4	9'-0	5	#4	9'-3
f3	str	4	#4	10'-0	5	#4	10'-3	5	#4	10'-6	5	#4	10'-9	5	#4	11'-3
f4	str	4	#4	11'-9	4	#4	12'-3	5	#4	12'-6	5	#4	12'-9	5	#4	13'-3
f5	str	3	#4	5'-9	3	#4	6'-0	3	#4	6'-3	3	#4	6'-6	3	#4	6'-9
f6	str	2	#4	7'-9	2	#4	8'-3	2	#4	8'-6	3	#4	8'-9	3	#4	9'-3
f7	str	2	#4	10'-0	2	#4	10'-3	2	#4	10'-6	2	#4	11'-3	2	#4	11'-6
f8	str	2	#4	12'-0	2	#4	12'-6	2	#4	12'-9	2	#4	13'-6	2	#4	14'-0
g	str	6	#4	15'-0	6	#4	15'-9	6	#4	16'-3	6	#4	17'-0	6	#4	17'-9
m1	str	6	#4	29'-3	6	#4	30'-6	7	#4	31'-6	7	#4	32'-6	7	#4	33'-9
m2	str	1	#4	29'-3	1	#4	30'-6	1	#4	31'-6	1	#4	32'-6	1	#4	33'-9
m3	str	6	#4	20'-6	6	#4	21'-6	7	#4	22'-3	7	#4	23'-3	7	#4	24'-0
m4	str	1	#4	20'-6	1	#4	21'-6	1	#4	22'-3	1	#4	23'-3	1	#4	24'-0
n1	str	6	#4	25'-0	6	#4	26'-0	7	#4	27'-0	7	#4	28'-0	7	#4	29'-0
n2	str	1	#4	25'-0	1	#4	26'-0	1	#4	27'-0	1	#4	28'-0	1	#4	29'-0
p	str	4	#5	17'-6	4	#5	18'-3	4	#5	19'-3	4	#5	20'-0	4	#5	20'-9
q	str	2	#6	19'-6	2	#6	20'-3	2	#6	21'-3	2	#6	22'-0	2	#6	22'-9
u	B	74	#4	7'-0	78	#4	7'-0	80	#4	7'-0	84	#4	7'-0	86	#4	7'-0
v	str	6	#4	27'-6	6	#4	28'-3	6	#4	29'-3	6	#4	30'-0	6	#4	31'-0
w	str	6	#4	12'-9	6	#4	13'-3	6	#4	13'-9	6	#4	14'-3	6	#4	14'-9

Pipe Diameter

	90"	96"	102"	108"	114"	120"	126"	132"	138"	144"
A	0'- 3	0'- 6	0'- 3	0'- 6	0'- 3	0'- 6	0'- 3	0'- 6	0'- 3	0'- 6
B	2'- 2	2'- 2	2'- 3	2'- 3	2'- 4	2'- 4	2'- 5	2'- 5	2'- 6	2'- 6
C	1'- 9	1'-10	1'-11	2'- 0	2'- 1	2'- 2	2'- 3	2'- 4	2'- 5	2'- 6
D	3'- 1	3'- 4	3'- 6	3'- 9	3'-11	4'- 2	4'- 4	4'- 7	4'- 9	5'- 0
E	7'- 0	7'- 4	7'- 8	8'- 0	8'- 4	8'- 8	9'- 0	9'- 4	9'- 8	10'- 0
F	22'- 0	23'- 0	24'- 0	25'- 0	26'- 0	27'- 0	28'- 0	29'- 0	30'- 0	31'- 0
G	6'- 5 5/8	6'- 9 7/8	7'- 2 1/8	7'- 6 3/8	7'-10 5/8	8'- 2 7/8	8'- 7 1/8	8'-11 3/8	9'- 3 5/8	9'- 7 7/8
H	9'- 6	10'- 0	10'- 6	11'- 0	11'- 6	12'- 0	12'- 6	13'- 0	13'- 6	14'- 0
J	4'- 3	4'- 6	4'- 9	5'- 0	5'- 3	5'- 6	5'- 9	6'- 0	6'- 3	6'- 6
K	24'- 3 1/2	25'- 4 3/8	26'- 5 1/8	27'- 6	28'- 6 5/8	29'- 7 1/2	30'- 8 5/8	31'- 9 1/2	32'-10 1/8	33'-11
L	7'- 9 1/8	8'- 2 1/4	8'- 7 1/4	9'- 0 3/8	9'- 5 1/4	9'-10 3/8	10'- 3 3/4	10'- 8 7/8	11'- 1 3/4	11'- 6 7/8
M	6'- 2 1/2	6'- 6 3/4	6'-10 3/4	7'- 3	7'- 7 1/8	7'-11 1/4	8'- 3 3/4	8'- 8	9'- 0	9'- 4 1/4
N	0'- 3	0'- 3	0'- 3	0'- 3	0'- 3	0'- 3	0'- 3	0'- 3	0'- 3	0'- 3
P	12'- 3 5/8	12'-11 7/8	13'- 7 1/8	14'- 3 3/8	14'-10 5/8	15'- 6 7/8	16'- 4 1/8	17'- 0 3/8	17'- 7 5/8	18'- 3 7/8
R	10'- 0	10'- 6	11'- 0	11'- 6	12'- 0	12'- 6	13'- 0	13'- 6	14'- 0	14'- 6
S	3'- 6	3'- 9	4'- 0	4'- 3	4'- 6	4'- 9	5'- 0	5'- 3	5'- 6	5'- 9
T	16'-10	17'- 8	18'- 5	19'- 3	20'- 0	20'-10	21'- 9	22'- 7	23'- 4	24'- 2
V	5'- 3 5/8	5'- 7 7/8	5'-11 1/8	6'- 3 3/8	6'- 6 5/8	6'-10 7/8	7'- 4 1/8	7'- 8 3/8	7'-11 5/8	8'- 3 7/8
W	7'- 5 5/8	7'- 9 7/8	8'- 2 1/8	8'- 6 3/8	8'-10 5/8	9'- 2 7/8	9'- 9 1/8	10'- 1 3/8	10'- 5 5/8	10'- 9 7/8
X	6'- 4	6'- 8 1/4	7'- 0 1/2	7'- 4 3/4	7'- 9	8'- 1 1/4	8'-10 1/4	9'- 2 1/2	9'- 6 5/8	9'-10 7/8

QUANTITIES

PIPE Dia.	REINF Lbs.	CONCRETE C.Y.
90"	1940	36.4
96"	2270	39.5
102"	2420	42.8
108"	2830	46.2
114"	3240	49.6
120"	3490	53.3
126"	3690	59.7
132"	4415	63.8
138"	4475	67.9
144"	5180	72.2

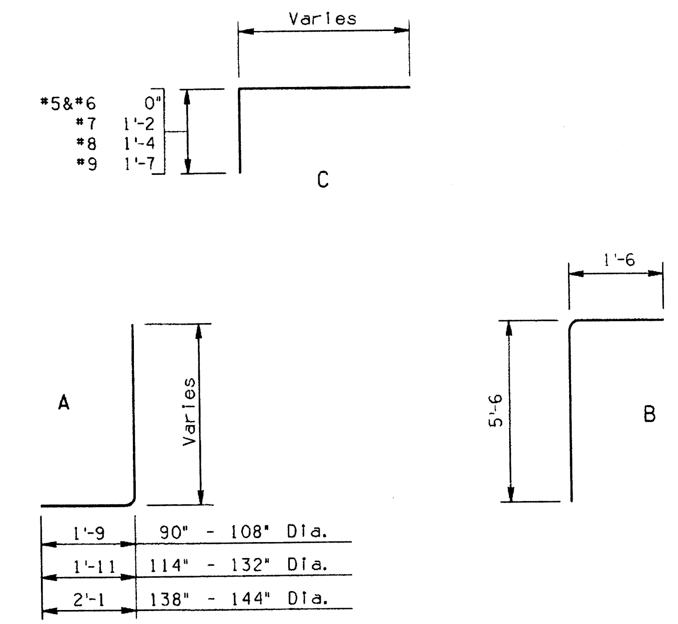

BENDS

NOTE:
Quantities and steel list shown are for one headwall.

NO			MADE BY	DATE
1	2-92	DESIGN	K.W.	
2	4-92	DRAWN	J.M.	
3	4-92	CHECKED	G.K.	
4				

DESCRIPTION OF REVISIONS

DESIGN APPROVED
F. Daniel Davis

APPROVED FOR DISTRIBUTION
August Hardt

Registered Professional Engineer (Civil) CERTIFICATE NO. 9910 F. DANIEL DAVIS DATE SIGNED 5-14-92 Arizona U.S.A.

ARIZONA
DEPARTMENT OF TRANSPORTATION
HIGHWAYS DIVISION
STANDARD DRAWINGS

OUTLET HEADWALLS
45° SKEW PIPE CULVERT
2:1 SLOPE

REVISION

STANDARD NO.
B-15.60

ZF1:[051020]SB1560.DGN;1 VIEW NAME:
08-MAY-1992 10:08

STEEL LIST

Mark	Bend	90" Dia. No	90" Size	90" Lgth	96" Dia. No	96" Size	96" Lgth	102" Dia. No	102" Size	102" Lgth	108" Dia. No	108" Size	108" Lgth	114" Dia. No	114" Size	114" Lgth
a1	A	5	#5	9'-3	5	#5	9'-6	5	#5	9'-9	5	#5	10'-3	5	#5	10'-9
a2	A	4	#5	9'-9	5	#5	10'-0	5	#5	10'-3	5	#5	10'-9	5	#5	11'-3
a3	A	4	#5	10'-3	4	#5	10'-6	5	#5	10'-9	5	#5	11'-3	5	#6	12'-0
a4	A	4	#5	10'-6	4	#5	11'-0	5	#6	11'-3	5	#6	11'-9	5	#6	12'-6
a5	A	4	#5	11'-0	4	#6	11'-6	4	#6	12'-0	5	#6	12'-6	5	#7	13'-0
a6	A	4	#6	11'-6	4	#6	12'-0	4	#6	12'-6	4	#7	13'-0	5	#7	13'-6
a7	A	4	#6	12'-0	4	#6	12'-6	4	#7	13'-0	4	#7	13'-6	5	#7	14'-3
a8	A	3	#5	8'-3	4	#5	8'-6	4	#5	8'-9	4	#5	9'-0	4	#5	9'-6
a9	A	3	#5	9'-3	3	#5	9'-6	4	#5	9'-9	4	#5	10'-0	4	#5	10'-6
a10	A	3	#5	10'-3	3	#5	10'-6	3	#6	10'-9	4	#6	11'-3	4	#6	11'-9
a11	A	3	#5	11'-0	3	#6	11'-6	3	#6	12'-0	3	#6	12'-3	4	#7	12'-9
a12	A	3	#6	12'-0	3	#6	12'-6	3	#6	13'-0	3	#7	13'-6	3	#7	14'-0
b1	str	2	#4	28'-0	2	#4	29'-6	2	#4	31'-0	2	#4	32'-6	2	#4	34'-0
b2	str	8	#4	28'-0	8	#4	29'-6	8	#4	31'-0	10	#4	32'-6	10	#4	34'-0
b3	str	2	#4	21'-0	2	#4	27'-0	2	#4	29'-0	2	#4	20'-0	2	#4	25'-0
b4	str	2	#4	7'-6	2	#4	13'-6	2	#4	15'-9	2	#4	6'-0	2	#4	12'-0
b5	str							2	#4	2'-6						
b6	str															
b7	str	2	#4	14'-6	2	#4	15'-6	2	#4	16'-6	2	#4	17'-6	2	#4	18'-6
b8	str	8	#4	14'-0	8	#4	15'-0	8	#4	16'-0	8	#4	17'-0	8	#4	18'-0
b9	str	2	#4	8'-9	2	#4	11'-6	2	#4	12'-3	2	#4	14'-0	2	#4	16'-3
b10	str	2	#4	3'-6	2	#4	5'-3	2	#4	7'-3	2	#4	8'-6	2	#4	10'-9
b11	str							2	#4	2'-0	2	#4	3'-3	2	#4	5'-3
b12	str															
c	str	4	#4	10'-6	4	#4	11'-0	4	#4	11'-6	4	#4	12'-0	4	#4	12'-6
d	A	6	#6	12'-3	6	#6	12'-9	6	#7	13'-3	6	#7	13'-9	6	#7	14'-6
e1	C	4	#5	4'-0	5	#5	4'-0	5	#5	4'-3	5	#5	4'-6	5	#5	4'-6
e2	C	4	#5	4'-3	5	#5	4'-3	5	#5	4'-6	5	#5	4'-9	5	#5	5'-0
e3	C	4	#5	4'-6	4	#5	4'-9	5	#5	5'-0	5	#5	5'-3	5	#5	5'-3
e4	C	4	#5	5'-0	4	#5	5'-3	4	#5	5'-6	5	#5	5'-6	5	#6	5'-9
e5	C	4	#5	5'-3	4	#5	5'-6	4	#5	5'-9	5	#6	6'-0	5	#6	6'-3
e6	C	4	#5	5'-6	4	#5	5'-9	4	#6	6'-0	4	#6	6'-3	5	#7	7'-6
e7	C	4	#5	5'-9	4	#6	6'-3	4	#6	6'-6	4	#7	7'-6	4	#7	8'-0
e8	C	2	#5	6'-0	2	#6	6'-6	2	#6	6'-9	2	#7	8'-0	2	#7	8'-3
e9	C	12	#5	6'-0	13	#6	6'-6	13	#6	6'-9	14	#7	8'-0	14	#7	8'-3
e10	C	5	#5	6'-0	5	#6	6'-6	5	#6	6'-9	6	#7	8'-0	6	#7	8'-3
e11	C	3	#5	5'-9	3	#6	6'-3	3	#6	6'-6	3	#6	6'-9	3	#7	8'-0
e12	C	3	#5	5'-3	3	#5	5'-9	3	#5	6'-0	3	#6	6'-3	4	#6	6'-6
e13	C	3	#5	4'-9	3	#5	5'-0	3	#5	5'-3	4	#5	5'-9	4	#6	5'-9
e14	C	3	#5	4'-6	3	#5	4'-6	4	#5	4'-9	4	#5	5'-0	4	#5	5'-3
e15	C	3	#5	4'-0	4	#5	4'-0	4	#5	4'-3	4	#5	4'-6	4	#5	4'-6
f1	str	5	#4	7'-3	5	#4	7'-9	6	#4	8'-0	6	#4	8'-3	6	#4	8'-9
f2	str	5	#4	8'-3	5	#4	8'-6	5	#4	9'-0	6	#4	9'-3	6	#4	9'-6
f3	str	5	#4	9'-0	5	#4	9'-6	5	#4	9'-9	5	#4	10'-3	6	#4	10'-6
f4	str	4	#4	10'-0	5	#4	10'-3	5	#4	10'-9	5	#4	11'-3	5	#4	11'-6
f5	str	3	#4	6'-6	3	#4	6'-9	3	#4	7'-0	3	#4	7'-3	3	#4	7'-6
f6	str	3	#4	7'-9	3	#4	8'-0	3	#4	8'-3	3	#4	8'-6	3	#4	8'-9
f7	str	2	#4	8'-9	2	#4	9'-0	3	#4	9'-6	3	#4	9'-9	3	#4	10'-3
f8	str	2	#4	10'-0	2	#4	10'-3	2	#4	10'-9	3	#4	11'-0	3	#4	11'-6
g	str	6	#4	11'-6	6	#4	12'-3	6	#4	12'-9	6	#4	13'-6	6	#4	14'-3
m1	str	4	#4	29'-9	4	#4	31'-3	4	#4	33'-0	5	#4	34'-6	5	#4	36'-0
m2	str	1	#4	29'-9	1	#4	31'-3	1	#4	33'-0	1	#4	34'-6	1	#4	36'-0
m3	str	4	#4	20'-0	4	#4	21'-3	4	#4	22'-6	5	#4	24'-0	5	#4	25'-3
m4	str	1	#4	20'-0	1	#4	21'-3	1	#4	22'-6	1	#4	24'-0	1	#4	25'-3
n1	str	4	#4	18'-9	4	#4	20'-0	4	#4	21'-0	5	#4	22'-0	5	#4	23'-0
n2	str	1	#4	18'-9	1	#4	20'-0	1	#4	21'-0	1	#4	22'-0	1	#4	23'-0
p	str	4	#5	13'-9	4	#5	14'-6	4	#5	15'-3	4	#5	16'-0	4	#5	16'-9
q	str	2	#6	15'-9	2	#6	16'-6	2	#6	17'-3	2	#6	18'-0	2	#6	18'-9
u	B	74	#4	7'-0	78	#4	7'-0	82	#4	7'-0	86	#4	7'-0	90	#4	7'-0
v	str	6	#4	29'-0	6	#4	30'-6	6	#4	32'-0	6	#4	33'-6	6	#4	35'-0
w	str	6	#4	14'-6	6	#4	15'-6	6	#4	16'-6	6	#4	17'-3	6	#4	18'-3

Mark	Bend	120" Dia. No	120" Size	120" Lgth	126" Dia. No	126" Size	126" Lgth	132" Dia. No	132" Size	132" Lgth	138" Dia. No	138" Size	138" Lgth	144" Dia. No	144" Size	144" Lgth
a1	A	6	#5	11'-0	6	#5	11'-3	6	#5	11'-9	6	#5	12'-3	6	#6	12'-6
a2	A	5	#6	11'-6	6	#5	11'-9	6	#6	12'-3	6	#6	13'-0	6	#6	13'-3
a3	A	5	#6	12'-3	6	#6	12'-6	6	#6	13'-0	6	#6	13'-6	6	#7	13'-9
a4	A	5	#7	12'-9	5	#7	13'-0	6	#7	13'-6	6	#7	14'-3	6	#7	14'-6
a5	A	5	#7	13'-3	5	#7	13'-9	5	#7	14'-3	6	#7	15'-0	6	#7	15'-3
a6	A	5	#7	13'-9	5	#7	14'-3	5	#7	14'-9	6	#7	15'-6	6	#8	15'-9
a7	A	5	#7	14'-6	5	#7	15'-0	5	#8	15'-6	5	#8	16'-3	6	#8	16'-6
a8	A	4	#5	9'-9	5	#5	10'-0	5	#5	10'-3	5	#5	10'-9	5	#5	11'-0
a9	A	4	#5	10'-9	4	#5	11'-3	5	#6	11'-6	5	#6	12'-0	5	#6	12'-3
a10	A	4	#6	12'-0	4	#6	12'-3	4	#6	12'-9	5	#7	13'-3	5	#7	13'-9
a11	A	4	#7	13'-0	4	#7	13'-6	4	#7	14'-0	4	#7	14'-9	5	#8	15'-3
a12	A	4	#7	14'-3	4	#7	14'-9	4	#8	15'-3	4	#8	16'-0	4	#8	16'-6
b1	str	2	#4	35'-6	2	#4	37'-0	2	#4	38'-6	2	#4	40'-0	2	#4	41'-6
b2	str	10	#4	35'-6	10	#4	37'-0	12	#4	38'-6	12	#4	40'-0	12	#4	41'-6
b3	str	2	#4	28'-9	2	#4	33'-9	2	#4	26'-3	2	#4	30'-3	2	#4	34'-0
b4	str	2	#4	15'-9	2	#4	20'-6	2	#4	11'-0	2	#4	16'-6	2	#4	20'-0
b5	str	2	#4	3'-0	2	#4	7'-6				2	#4	3'-0	2	#4	6'-3
b6	str															
b7	str	2	#4	19'-6	2	#4	20'-6	2	#4	21'-6	2	#4	22'-9	2	#4	23'-9
b8	str	8	#4	19'-0	10	#4	20'-0	10	#4	21'-0	10	#4	22'-0	10	#4	23'-0
b9	str	2	#4	18'-3	2	#4	14'-3	2	#4	16'-6	2	#4	18'-3	2	#4	20'-3
b10	str	2	#4	12'-9	2	#4	8'-9	2	#4	10'-9	2	#4	12'-9	2	#4	14'-9
b11	str	2	#4	7'-3	2	#4	3'-3	2	#4	5'-3	2	#4	7'-6	2	#4	9'-3
b12	str	2	#4	1'-9							2	#4	2'-0	2	#4	3'-6
c	str	4	#4	13'-0	4	#4	13'-6	4	#4	14'-0	4	#4	14'-6	4	#4	15'-0
d	A	6	#7	15'-0	6	#7	15'-6	6	#8	16'-0	6	#8	16'-6	6	#8	17'-0
e1	C	6	#5	4'-9	6	#5	5'-0	6	#5	5'-0	6	#6	5'-3	6	#6	5'-6
e2	C	5	#5	5'-3	6	#6	5'-6	6	#6	5'-6	6	#6	5'-9	6	#6	6'-0
e3	C	5	#5	5'-6	5	#6	5'-9	6	#6	6'-0	6	#6	6'-3	6	#7	7'-3
e4	C	5	#6	6'-0	5	#7	7'-3	6	#7	7'-3	6	#7	7'-9	6	#7	8'-0
e5	C	5	#6	6'-6	5	#7	7'-9	5	#7	7'-9	6	#7	8'-3	6	#8	8'-9
e6	C	5	#7	7'-9	5	#7	8'-0	5	#7	8'-3	5	#8	9'-0	6	#8	9'-3
e7	C	5	#7	8'-3	5	#7	8'-6	5	#8	9'-0	5	#8	9'-6	6	#8	9'-9
e8	C	3	#7	8'-6	3	#7	8'-9	3	#8	9'-6	3	#8	9'-9	3	#8	10'-0
e9	C	15	#7	8'-6	15	#7	8'-9	16	#8	9'-6	16	#8	9'-9	17	#8	10'-0
e10	C	6	#7	8'-6	6	#7	8'-9	7	#8	9'-6	7	#8	9'-9	7	#8	10'-0
e11	C	3	#7	8'-3	4	#7	8'-6	4	#7	9'-0	4	#7	9'-3	4	#7	9'-6
e12	C	4	#6	6'-9	4	#7	7'-9	4	#7	8'-3	4	#7	8'-6	4	#7	8'-9
e13	C	4	#6	6'-0	4	#6	6'-3	4	#6	6'-6	4	#7	7'-9	5	#7	8'-0
e14	C	4	#5	5'-6	4	#5	5'-9	4	#6	5'-9	5	#6	6'-0	5	#6	6'-3
e15	C	4	#5	4'-9	4	#5	5'-0	5	#5	5'-0	5	#5	5'-3	5	#5	5'-6
f1	str	6	#4	9'-0	7	#4	9'-3	7	#4	9'-9	7	#4	10'-0	7	#4	10'-3
f2	str	6	#4	10'-0	6	#4	10'-3	7	#4	10'-9	7	#4	11'-3	7	#4	11'-6
f3	str	6	#4	11'-0	6	#4	11'-6	6	#4	12'-0	7	#4	12'-3	7	#4	12'-9
f4	str	6	#4	12'-0	6	#4	12'-6	6	#4	13'-0	6	#4	13'-6	7	#4	14'-0
f5	str	4	#4	7'-9	4	#4	8'-0	4	#4	8'-3	4	#4	8'-6	4	#4	8'-9
f6	str	3	#4	9'-0	4	#4	9'-6	4	#4	9'-9	4	#4	10'-3	4	#4	11'-6
f7	str	3	#4	10'-6	3	#4	11'-0	3	#4	11'-6	4	#4	11'-9	4	#4	12'-0
f8	str	3	#4	11'-9	3	#4	12'-6	3	#4	13'-0	3	#4	13'-6	4	#4	13'-9
g	str	6	#4	15'-0	6	#4	15'-9	6	#4	16'-3	6	#4	17'-0	6	#4	17'-9
m1	str	5	#4	37'-9	5	#4	39'-3	6	#4	40'-9	6	#4	42'-6	6	#4	44'-0
m2	str	1	#4	37'-9	1	#4	39'-3	1	#4	40'-9	1	#4	42'-6	1	#4	44'-0
m3	str	5	#4	26'-6	5	#4	27'-9	6	#4	29'-3	6	#4	30'-6	6	#4	31'-9
m4	str	1	#4	26'-6	1	#4	27'-9	1	#4	29'-3	1	#4	30'-6	1	#4	31'-9
n1	str	5	#4	24'-3	5	#4	25'-3	6	#4	26'-3	6	#4	27'-6	6	#4	28'-6
n2	str	1	#4	24'-3	1	#4	25'-3	1	#4	26'-3	1	#4	27'-6	1	#4	28'-6
p	str	4	#5	17'-6	4	#5	18'-3	4	#5	19'-3	4	#5	20'-0	4	#5	20'-9
q	str	2	#6	19'-6	2	#6	20'-3	2	#6	21'-3	2	#6	22'-0	2	#6	22'-9
u	B	94	#4	7'-0	98	#4	7'-0	102	#4	7'-0	106	#4	7'-0	110	#4	7'-0
v	str	6	#4	36'-6	6	#4	38'-0	6	#4	39'-6	6	#4	41'-0	6	#4	42'-0
w	str	6	#4	19'-3	6	#4	20'-3	6	#4	21'-0	6	#4	22'-0	6	#4	23'-0

Pipe Diameter

	90"	96"	102"	108"	114"	120"	126"	132"	138"	144"
A	0'- 3	0'- 3	0'- 3	0'- 3	0'- 3	0'- 3	0'- 3	0'- 3	0'- 3	0'- 3
B	2'- 2	2'- 2	2'- 3	2'- 3	2'- 4	2'- 4	2'- 5	2'- 5	2'- 6	2'- 6
C	2'- 1	2'- 3	2'- 4	2'- 6	2'- 7	2'- 9	2'-10	3'- 0	3'- 1	3'- 3
D	2'- 1	2'- 3	2'- 5	2'- 7	2'- 9	2'-11	3'- 1	3'- 3	3'- 5	3'- 7
E	6'- 4	6'- 8	7'- 0	7'- 4	7'- 8	8'- 0	8'- 4	8'- 8	9'- 0	9'- 4
F	28'- 0	29'- 6	31'- 0	32'- 6	34'- 0	35'- 6	37'- 0	38'- 6	40'- 0	41'- 6
G	6'- 5⅝	6'- 9⅞	7'- 2⅛	7'- 6⅜	7'-10⅝	8'- 2⅞	8'- 7⅛	8'-11⅜	9'- 3⅝	9'- 7⅞
H	9'- 6	10'- 0	10'- 6	11'- 0	11'- 6	12'- 0	12'- 6	13'- 0	13'- 6	14'- 0
J	6'- 4	6'- 8	7'- 0	7'- 4	7'- 8	8'- 0	8'- 4	8'- 8	9'- 0	9'- 4
K	30'- 1¾	31'- 8⅝	33'- 3¼	34'-10⅛	36'- 4⅞	37'-11¾	39'- 6⅞	41'- 1¾	42'- 8⅜	44'- 3¼
L	7'- 7⅜	8'- 0½	8'- 5⅜	8'-10½	9'- 3½	9'- 8⅝	10'- 2	10'- 7⅛	11'- 0	11'- 5⅛
M	6'- 2½	6'- 6¾	6'-10¾	7'- 3	7'- 7⅛	7'-11¼	8'- 3¾	8'- 8	9'- 0	9'- 4¼
N	0'- 3	0'- 6	0'- 3	0'- 6	0'- 3	0'- 6	0'- 3	0'- 6	0'- 3	0'- 6
P	11'- 7⅝	12'- 3⅞	12'-11⅛	13'- 7⅜	14'- 2⅝	14'-10⅞	15'- 8⅛	16'- 4⅜	16'-11⅝	17'- 7⅞
R	14'- 0	15'- 0	16'- 0	17'- 0	18'- 0	19'- 0	20'- 0	21'- 0	22'- 0	23'- 0
S	5'- 6	5'- 9	6'- 0	6'- 3	6'- 6	6'- 9	7'- 0	7'- 3	7'- 6	7'- 9
T	20'- 2	21'- 6	22'- 9	24'- 1	25'- 4	26'- 8	28'- 1	29'- 5	30'- 8	32'- 0
V	5'- 3⅝	5'- 7⅞	5'-11⅛	6'- 3⅜	6'- 6⅝	6'-10⅞	7'- 4⅛	7'- 8⅜	7'-11⅝	8'- 3⅞
W	7'- 5⅝	7'- 9⅞	8'- 2⅛	8'- 6⅜	8'-10⅝	9'- 2⅞	9'- 9⅛	10'- 1⅜	10'- 5⅝	10'- 9⅞
X	6'- 4	6'- 8¼	7'- 0½	7'- 4¾	7'- 9	8'- 1¼	8'-10¼	9'- 2½	9'- 6⅝	9'-10⅞

QUANTITIES

PIPE Dia.	REINF Lbs.	CONCRETE C.Y.
90"	2410	43.7
96"	2715	48.0
102"	3030	52.3
108"	3545	56.9
114"	3985	61.6
120"	4320	66.7
126"	4660	75.7
132"	5460	81.4
138"	5940	87.2
144"	6580	93.3

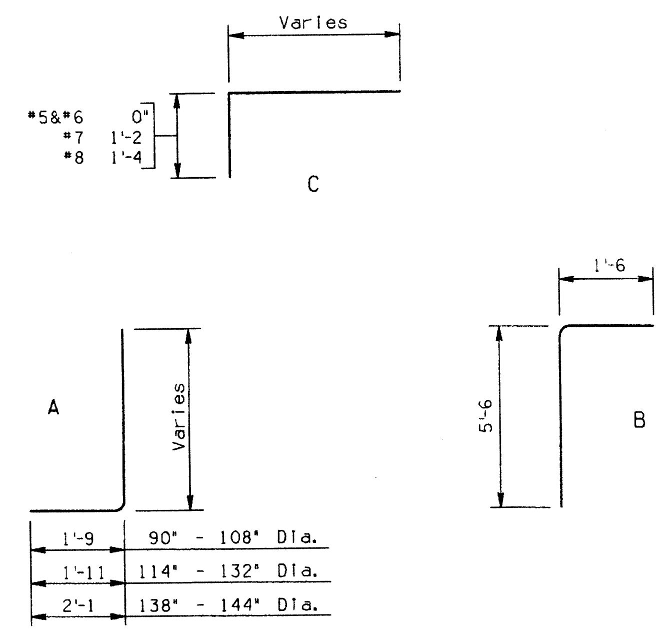

BENDS

NOTE:
Quantities and steel list shown are for one headwall.

DESIGN APPROVED	ARIZONA DEPARTMENT OF TRANSPORTATION HIGHWAYS DIVISION STANDARD DRAWINGS	REVISION
APPROVED FOR DISTRIBUTION	OUTLET HEADWALLS 45° SKEW PIPE CULVERT 4:1 SLOPE	STANDARD NO. B-15.70

9910 F. DANIEL DAVIS 5-4-92

			NO	DESCRIPTION OF REVISIONS	MADE BY	DATE
DESIGN	K.W.	2-92	1			
DRAWN	J.W.	4-92	2			
CHECKED	G.K.	4-92	3			
			4			

ZF1:[051020]SB1570.DGN;1 VIEW NAME:
08-MAY-1992 10:17

STEEL LIST

Mark	Bend	90" Dia.			96" Dia.			102" Dia.			108" Dia.			114" Dia.			120" Dia.			126" Dia.			132" Dia.			138" Dia.			144" Dia.		
		No	Size	Lgth	No	Size	Lgth	No	Size	Lgth	No	Size	Lgth	No	Size	Lgth	No	Size	Lgth	No	Size	Lgth	No	Size	Lgth	No	Size	Lgth	No	Size	Lgth
a1	A	6	#5	9'-6	6	#5	10'-0	6	#5	10'-3	6	#5	10'-9	7	#5	11'-3	7	#6	11'-9	7	#5	12'-3	7	#6	12'-6	7	#6	13'-3	8	#7	13'-6
a2	A	6	#5	10'-0	6	#5	10'-6	6	#5	10'-6	6	#5	11'-0	6	#6	11'-9	7	#6	12'-3	7	#6	12'-9	7	#6	13'-0	7	#7	13'-9	7	#7	14'-0
a3	A	5	#5	10'-3	6	#5	10'-9	6	#5	11'-0	6	#6	11'-6	6	#6	12'-3	6	#6	12'-9	7	#6	13'-3	7	#7	13'-6	7	#7	14'-3	7	#7	14'-6
a4	A	5	#5	10'-9	5	#6	11'-3	6	#6	11'-6	6	#6	12'-0	6	#7	12'-9	6	#7	13'-0	7	#7	13'-6	7	#7	14'-0	7	#7	14'-9	7	#7	15'-0
a5	A	5	#5	11'-3	5	#6	11'-9	6	#6	12'-0	6	#7	12'-6	6	#7	13'-3	6	#7	13'-6	6	#7	14'-0	7	#7	14'-6	7	#7	15'-3	7	#8	15'-9
a6	A	5	#6	11'-6	5	#6	12'-0	5	#6	12'-6	6	#7	13'-0	6	#7	13'-9	6	#7	14'-0	6	#7	14'-6	6	#7	15'-0	7	#8	15'-9	7	#8	16'-3
a7	A	5	#6	12'-0	5	#6	12'-6	5	#7	13'-0	5	#7	13'-6	6	#7	14'-3	6	#7	14'-6	6	#7	15'-0	6	#8	15'-6	7	#8	16'-3	7	#8	16'-9
a8	A	4	#5	9'-3	4	#5	9'-6	4	#5	9'-9	5	#5	10'-3	5	#5	10'-9	5	#5	11'-0	5	#5	11'-3	5	#5	11'-9	6	#6	12'-3	6	#6	12'-6
a9	A	4	#5	10'-0	4	#5	10'-3	4	#5	10'-6	4	#5	11'-0	5	#6	11'-6	5	#6	11'-9	5	#6	12'-3	5	#6	12'-6	5	#6	13'-3	6	#7	13'-6
a10	A	4	#5	10'-6	4	#5	11'-0	4	#6	11'-6	4	#6	11'-9	4	#6	12'-3	5	#7	12'-9	5	#7	13'-0	5	#7	13'-6	5	#7	14'-0	5	#7	14'-6
a11	A	3	#6	11'-3	4	#6	11'-9	4	#6	12'-3	4	#7	12'-6	4	#7	13'-3	4	#7	13'-6	5	#7	14'-0	5	#7	14'-3	5	#7	15'-0	5	#8	15'-6
a12	A	3	#6	12'-0	3	#6	12'-6	4	#7	13'-0	4	#7	13'-3	4	#7	14'-0	4	#7	14'-6	4	#7	15'-0	5	#8	15'-3	5	#8	16'-0	5	#8	16'-6
b1	str	2	#4	36'-0	2	#4	37'-6	2	#4	39'-0	2	#4	40'-6	2	#4	42'-0	2	#4	43'-6	2	#4	45'-0	2	#4	46'-6	2	#4	48'-0	2	#4	49'-6
b2	str	8	#4	36'-0	10	#4	37'-6	10	#4	39'-0	10	#4	40'-6	10	#4	42'-0	12	#4	43'-6	12	#4	45'-0	12	#4	46'-6	14	#4	48'-0	14	#4	49'-6
b3	str	2	#4	32'-0	2	#4	19'-0	2	#4	25'-0	2	#4	32'-0	2	#4	37'-0	2	#4	25'-0	2	#4	32'-0	2	#4	39'-6	2	#4	27'-0	2	#4	36'-0
b4	str	2	#4	11'-0				2	#4	6'-0	2	#4	13'-0	2	#4	18'-6	2	#4	5'-0	2	#4	12'-0	2	#4	19'-0	2	#4	6'-6	2	#4	14'-0
b5	str																														
b6	str																														
b7	str	2	#4	17'-0	2	#4	18'-0	2	#4	19'-0	2	#4	20'-0	2	#4	21'-0	2	#4	22'-0	2	#4	23'-0	2	#4	24'-0	2	#4	25'-0	2	#4	26'-0
b8	str	8	#4	17'-0	8	#4	18'-0	8	#4	19'-0	10	#4	20'-0	10	#4	21'-0	10	#4	22'-0	10	#4	23'-0	10	#4	24'-0	12	#4	25'-0	12	#4	26'-0
b9	str	2	#4	12'-6	2	#4	16'-0	2	#4	18'-0	2	#4	13'-0	2	#4	16'-0	2	#4	19'-0	2	#4	21'-3	2	#4	23'-6	2	#4	19'-0	2	#4	21'-3
b10	str	2	#4	4'-0	2	#4	7'-0	2	#4	10'-6	2	#4	4'-6	2	#4	8'-0	2	#4	11'-0	2	#4	13'-0	2	#4	15'-3	2	#4	10'-6	2	#4	13'-3
b11	str							2	#4	1'-6							2	#4	3'-0	2	#4	5'-0	2	#4	7'-3	2	#4	2'-3	2	#4	5'-0
b12	str																														
c	str	4	#4	10'-6	4	#4	11'-0	4	#4	11'-6	4	#4	12'-0	4	#4	12'-6	4	#4	13'-0	4	#4	13'-6	4	#4	14'-0	4	#4	14'-6	4	#4	15'-0
d	A	6	#6	12'-3	6	#6	12'-9	6	#6	13'-3	6	#7	13'-9	6	#7	14'-6	6	#7	15'-0	6	#7	15'-6	6	#8	16'-0	6	#8	16'-6	6	#8	17'-0
e1	C	8	#5	4'-3	7	#5	4'-3	7	#5	4'-6	7	#5	4'-9	6	#5	4'-9	7	#5	5'-0	7	#5	5'-3	7	#6	5'-3	7	#6	5'-6	8	#6	5'-9
e2	C	7	#5	4'-6	7	#5	4'-6	7	#5	4'-9	7	#5	5'-0	6	#5	5'-0	7	#5	5'-3	7	#6	5'-6	7	#6	5'-9	7	#6	6'-0	7	#6	6'-3
e3	C	7	#5	4'-9	6	#5	4'-9	7	#5	5'-0	7	#5	5'-3	6	#5	5'-3	6	#6	5'-6	7	#6	6'-0	7	#6	6'-3	7	#7	7'-0	7	#7	7'-3
e4	C	7	#5	5'-0	6	#5	5'-0	6	#5	5'-3	7	#6	5'-6	6	#6	5'-6	6	#6	5'-9	6	#6	6'-3	7	#7	7'-6	7	#7	7'-6	7	#7	7'-9
e5	C	7	#5	5'-3	6	#5	5'-3	6	#6	5'-6	7	#6	5'-9	6	#6	6'-0	6	#6	6'-3	6	#7	7'-3	7	#7	7'-9	7	#7	8'-3	7	#7	8'-0
e6	C				6	#6	5'-6	6	#6	5'-9	6	#6	6'-0	6	#6	6'-3	6	#7	7'-3	6	#7	7'-9	6	#7	8'-0	7	#8	8'-6	7	#8	8'-9
e7	C													6	#7	7'-3	6	#7	7'-6	6	#7	8'-0	6	#7	8'-3	6	#8	8'-9	7	#8	9'-0
e8	C	2	#5	5'-3	2	#6	5'-6	2	#6	6'-0	2	#6	6'-3	2	#7	7'-6	3	#7	8'-0	3	#7	8'-3	3	#7	8'-6	3	#8	9'-0	3	#8	9'-6
e9	C	12	#5	5'-3	13	#6	5'-6	13	#6	6'-0	14	#6	6'-3	14	#7	7'-6	15	#7	8'-0	15	#7	8'-3	16	#7	8'-6	16	#8	9'-0	17	#8	9'-6
e10	C	5	#5	5'-3	5	#6	5'-6	5	#6	6'-0	6	#6	6'-3	6	#7	7'-6	6	#7	8'-0	6	#7	8'-3	7	#7	8'-6	7	#8	9'-0	7	#8	9'-6
e11	C	3	#5	5'-3	3	#5	5'-6	3	#5	5'-9	4	#6	6'-0	4	#6	6'-6	4	#6	6'-9	4	#6	7'-0	4	#6	7'-3	5	#7	8'-6	5	#7	8'-9
e12	C	3	#5	5'-0	3	#5	5'-3	4	#5	5'-6	4	#5	5'-9	4	#6	6'-0	4	#6	6'-3	4	#6	6'-6	5	#6	6'-9	5	#6	7'-3	5	#6	7'-6
e13	C	3	#5	4'-9	4	#5	4'-9	4	#5	5'-0	4	#5	5'-3	4	#5	5'-9	4	#5	6'-0	5	#5	6'-3	5	#6	6'-3	5	#6	6'-6	5	#6	6'-9
e14	C	4	#5	4'-6	4	#5	4'-6	4	#5	4'-9	4	#5	5'-0	4	#5	5'-3	5	#5	5'-6	5	#5	5'-9	5	#5	5'-9	5	#5	6'-0	5	#5	6'-3
e15	C	4	#5	4'-3	4	#5	4'-3	4	#5	4'-6	4	#5	4'-9	5	#5	4'-9	5	#5	5'-0	5	#5	5'-3	5	#5	5'-3	5	#5	5'-6	6	#5	5'-9
f1	str	6	#4	7'-9	7	#4	8'-0	7	#4	8'-6	7	#4	9'-0	7	#4	9'-3	8	#4	9'-9	8	#4	10'-3	8	#4	10'-6	8	#4	11'-0	9	#4	11'-6
f2	str	6	#4	8'-6	6	#4	8'-9	7	#4	9'-3	7	#4	9'-9	7	#4	10'-0	7	#4	10'-6	8	#4	11'-0	8	#4	11'-6	8	#4	11'-9	8	#4	12'-3
f3	str	6	#4	9'-3	6	#4	9'-9	6	#4	10'-0	7	#4	10'-6	7	#4	11'-0	7	#4	11'-6	7	#4	12'-0	8	#4	12'-3	8	#4	12'-9	8	#4	13'-3
f4	str	6	#4	10'-0	6	#4	10'-6	6	#4	10'-9	6	#4	11'-3	7	#4	11'-9	7	#4	12'-3	7	#4	12'-9	7	#4	13'-3	8	#4	13'-6	8	#4	14'-0
f5	str	3	#4	7'-3	3	#4	7'-9	4	#4	8'-0	4	#4	8'-3	4	#4	8'-9	4	#4	9'-0	4	#4	9'-3	4	#4	9'-9	5	#4	10'-0	5	#4	10'-3
f6	str	3	#4	8'-3	3	#4	8'-9	3	#4	9'-0	4	#4	9'-3	4	#4	9'-9	4	#4	10'-0	4	#4	10'-6	4	#4	10'-9	4	#4	11'-3	5	#4	11'-6
f7	str	3	#4	9'-0	3	#4	9'-6	3	#4	10'-0	3	#4	10'-6	3	#4	11'-0	4	#4	11'-3	4	#4	11'-6	4	#4	12'-0	4	#4	12'-3	4	#4	12'-9
f8	str	3	#4	10'-0	3	#4	10'-6	3	#4	11'-0	3	#4	11'-6	3	#4	12'-0	3	#4	12'-3	4	#4	12'-9	4	#4	13'-0	4	#4	13'-6	4	#4	14'-0
g	str	6	#4	11'-6	6	#4	12'-3	6	#4	12'-9	6	#4	13'-6	6	#4	14'-3	6	#4	15'-0	6	#4	15'-9	6	#4	16'-3	6	#4	17'-0	6	#4	17'-9
m1	str	4	#4	37'-9	4	#4	39'-3	4	#4	40'-9	5	#4	42'-6	5	#4	44'-0	5	#4	45'-6	5	#4	47'-0	6	#4	48'-6	6	#4	50'-3	6	#4	51'-9
m2	str	1	#4	37'-9	1	#4	39'-3	1	#4	40'-9	1	#4	42'-6	1	#4	44'-0	1	#4	45'-6	1	#4	47'-0	1	#4	48'-6	1	#4	50'-3	1	#4	51'-9
m3	str	4	#4	22'-3	4	#4	23'-6	4	#4	24'-9	5	#4	26'-3	5	#4	27'-6	5	#4	28'-9	5	#4	30'-0	6	#4	31'-3	6	#4	32'-9	6	#4	34'-0
m4	str	1	#4	22'-3	1	#4	23'-6	1	#4	24'-9	1	#4	26'-3	1	#4	27'-6	1	#4	28'-9	1	#4	30'-0	1	#4	31'-3	1	#4	32'-9	1	#4	34'-0
n1	str	4	#4	18'-0	4	#4	19'-0	4	#4	20'-3	5	#4	21'-3	5	#4	22'-6	5	#4	23'-6	5	#4	24'-9	6	#4	25'-9	6	#4	26'-9	6	#4	28'-0
n2	str	1	#4	18'-0	1	#4	19'-0	1	#4	20'-3	1	#4	21'-3	1	#4	22'-6	1	#4	23'-6	1	#4	24'-9	1	#4	25'-9	1	#4	26'-9	1	#4	28'-0
p	str	4	#5	13'-9	4	#5	14'-6	4	#5	15'-3	4	#5	16'-0	4	#5	16'-9	4	#5	17'-6	4	#5	18'-3	4	#5	19'-3	4	#5	20'-0	4	#5	20'-9
q	str	2	#6	15'-9	2	#6	16'-6	2	#6	17'-3	2	#6	18'-0	2	#6	18'-9	2	#6	19'-6	2	#6	20'-3	2	#6	21'-3	2	#6	22'-0	2	#6	22'-9
u	B	88	#4	7'-0	92	#4	7'-0	96	#4	7'-0	100	#4	7'-0	104	#4	7'-0	108	#4	7'-0	112	#4	7'-0	116	#4	7'-0	120	#4	7'-0	124	#4	7'-0
v	str	6	#4	36'-0	6	#4	37'-6	6	#4	39'-0	6	#4	40'-6	6	#4	42'-0	6	#4	43'-6	6	#4	45'-0	6	#4	46'-6	6	#4	48'-0	6	#4	49'-6
w	str	6	#4	17'-0	6	#4	18'-0	6	#4	19'-0	6	#4	20'-0	6	#4	21'-0	6	#4	22'-0	6	#4	23'-0	6	#4	24'-0	6	#4	25'-0	6	#4	26'-0

Pipe Diameter

	90"	96"	102"	108"	114"	120"	126"	132"	138"	144"
A	0'- 3	0'- 3	0'- 3	0'- 3	0'- 3	0'- 3	0'- 3	0'- 3	0'- 3	0'- 3
B	2'- 2	2'- 2	2'- 3	2'- 3	2'- 4	2'- 4	2'- 5	2'- 5	2'- 6	2'- 6
C	2'- 4	2'- 6	2'- 7	2'- 9	2'-10	3'- 0	3'- 1	3'- 3	3'- 4	3'- 6
D	1'- 2	1'- 4	1'- 6	1'- 8	1'-10	2'- 0	2'- 2	2'- 4	2'- 6	2'- 8
E	5'- 8	6'- 0	6'- 4	6'- 8	7'- 0	7'- 4	7'- 8	8'- 0	8'- 4	8'- 8
F	36'- 0	37'- 6	39'- 0	40'- 6	42'- 0	43'- 6	45'- 0	46'- 6	48'- 0	49'- 6
G	6'- 5⅝	6'- 9⅞	7'- 2⅛	7'- 6⅜	7'-10⅝	8'- 2⅞	8'- 7⅛	8'-11⅜	9'- 3⅝	9'- 7⅞
H	9'- 6	10'- 0	10'- 6	11'- 0	11'- 6	12'- 0	12'- 6	13'- 0	13'- 6	14'- 0
J	6'- 8	7'- 1	7'- 6	7'-11	8'- 4	8'- 9	9'- 2	9'- 7	10'- 0	10'- 5
K	38'- 0	39'- 6⅞	41'- 1½	42'- 8⅜	44'- 3⅛	45'-10	47'- 5⅛	49'- 0	50'- 6⅝	52'- 1½
L	7'- 5⅝	7'-10¾	8'- 3⅝	8'- 8¾	9'- 1⅝	9'- 6⅞	10'- 0⅛	10'- 5¼	10'-10¼	11'- 3⅜
M	6'- 2½	6'- 6¾	6'-10¾	7'- 3	7'- 7⅛	7'-11¼	8'- 3¾	8'- 8	9'- 0	9'- 4¼
N	0'- 3	0'- 6	0'- 3	0'- 6	0'- 3	0'- 6	0'- 3	0'- 6	0'- 3	0'- 6
P	10'-11⅝	11'- 7⅞	12'- 3⅛	12'-11⅜	13'- 6⅝	14'- 2⅞	15'- 0⅛	15'- 8⅜	16'- 3⅝	16'-11⅞
R	17'- 0	18'- 0	19'- 0	20'- 0	21'- 0	22'- 0	23'- 0	24'- 0	25'- 0	26'- 0
S	6'- 4	6'- 8	7'- 0	7'- 4	7'- 8	8'- 0	8'- 4	8'- 8	9'- 0	9'- 4
T	22'- 6	23'-10	25'- 1	26'- 5	27'- 8	29'- 0	30'- 5	31'- 9	33'- 0	34'- 4
V	5'- 3⅝	5'- 7⅞	5'-11⅛	6'- 3⅜	6'- 6⅝	6'-10⅞	7'- 4⅛	7'- 8⅜	7'-11⅝	8'- 3⅞
W	7'- 5⅝	7'- 9⅞	8'- 2⅛	8'- 6⅜	8'-10⅝	9'- 2⅞	9'- 9⅛	10'- 1⅜	10'- 5⅝	10'- 9⅞
X	6'- 4	6'- 8¼	7'- 0½	7'- 4¾	7'- 9	8'- 1¼	8'-10¼	9'- 2½	9'- 6⅝	9'-10⅞

QUANTITIES

PIPE DIA	REINF lbs	CONCRETE C.Y.
90"	2880	50.7
96"	3200	55.3
102"	3545	60.0
108"	4080	64.9
114"	4640	70.0
120"	5065	75.4
126"	5405	85.7
132"	6150	91.8
138"	7025	98.1
144"	7625	104.6

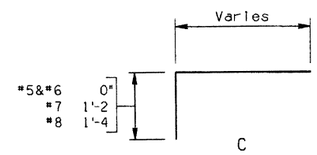

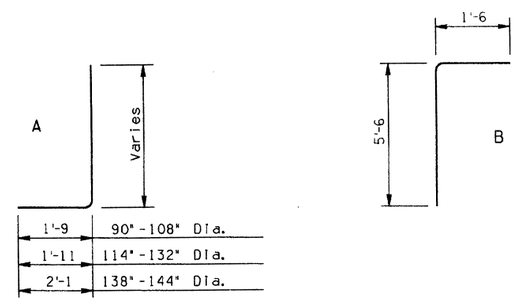

BENDS

NOTE:
Quantities and steel list shown are for one headwall.

DESIGN	K. W.
DRAWN	J. W.
CHECKED	G. K.

NO	DATE	DESCRIPTION OF REVISIONS	MADE BY
1	2-92		
2	4-92		
3	4-92		
4			

DESIGN APPROVED

APPROVED FOR DISTRIBUTION

ARIZONA
DEPARTMENT OF TRANSPORTATION
HIGHWAYS DIVISION
STANDARD DRAWINGS

OUTLET HEADWALLS
45° SKEW PIPE CULVERT
6:1 SLOPE

REVISION

STANDARD NO.
B-15.80

ZF1:[051020]SB1580.DGN;1
08-MAY-1992 10:20
VIEW NAME:

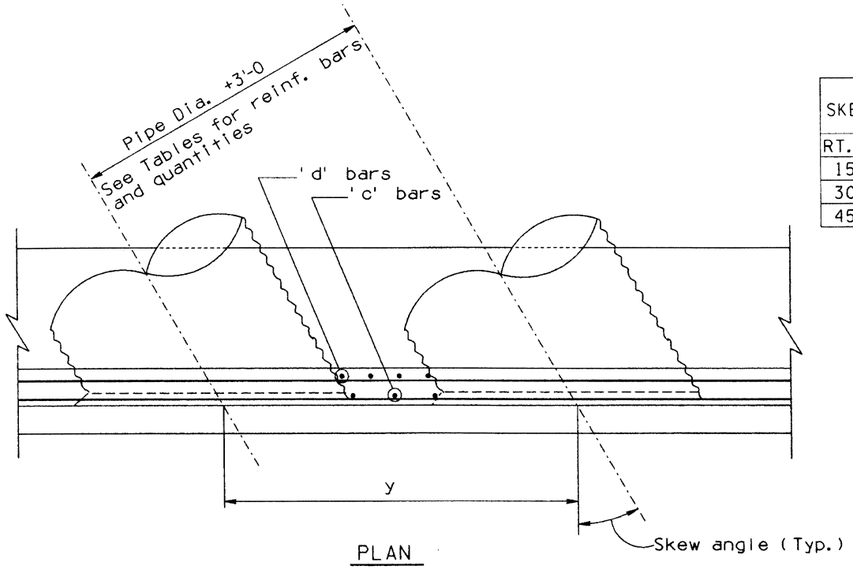

PLAN

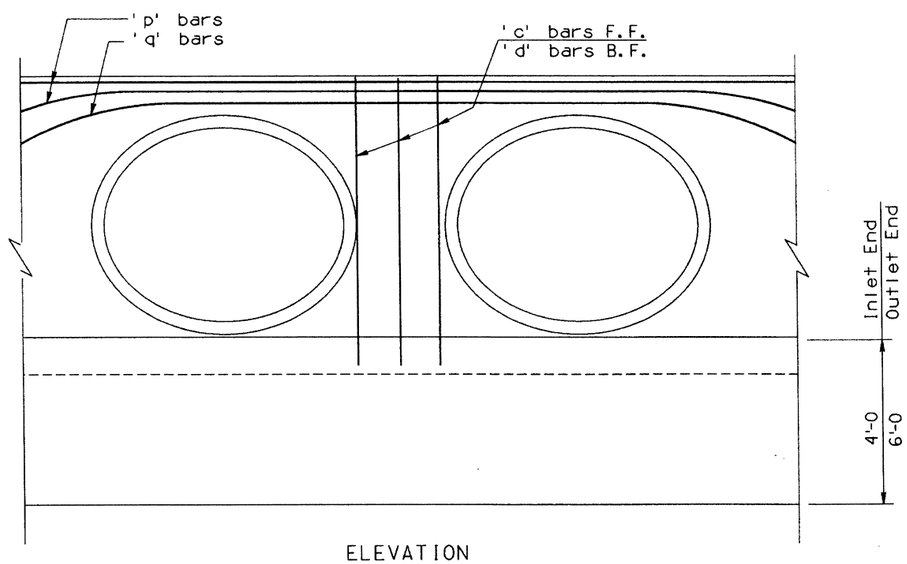

ELEVATION

DIMENSION Y (FT.)

SKEW	PIPE DIA. (Inches)									
	90"	96"	102"	108"	114"	120"	126"	132"	138"	144"
RT.∢	10'-6	11'-0	11'-6	12'-0	12'-6	13'-0	13'-6	14'-0	14'-6	15'-0
15°	10'-10½	11'-4⅝	11'-10⅞	12'-5⅛	12'-11¼	13'-5½	13'-11¾	14'-5⅞	15'-0⅛	15'-6⅜
30°	12'-1½	12'-8⅜	13'-3⅜	13'-10¼	14'-5¼	15'-0⅛	15'-7	16'-2	16'-8⅞	17'-3⅞
45°	14'-10¼	15'-6⅝	16'-3⅛	16'-11⅝	17'-8⅛	18'-4⅝	19'-1⅛	19'-9⅝	20'-6⅛	21'-2½

No. OF ADDITIONAL BARS REQUIRED FOR ADDITIONAL PIPE

SKEW	MARK	PIPE DIA. (Inches)									
		90	96	102	108	114	120	126	132	138	144
RT.∢	c	3	3	3	3	3	3	3	3	3	3
	d	4	4	4	4	4	4	4	4	4	4
	e8	10	10	11	11	12	12	13	13	14	14
	u *	6	7	7	7	8	8	8	9	9	9
15°	c	3	3	3	3	3	3	3	3	3	3
	d	4	4	4	4	4	4	4	4	4	4
	e8	10	11	11	12	12	13	13	14	14	15
	u *	7	7	7	8	8	8	9	9	10	10
30°	c	3	3	3	3	3	3	3	3	3	3
	d	4	4	4	4	4	4	4	4	4	4
	e9	11	12	13	13	14	14	15	15	16	17
	u *	8	8	8	9	9	10	10	10	11	11
45°	c	4	4	4	4	4	4	4	4	4	4
	d	5	5	5	5	5	5	5	5	5	5
	e9	14	15	16	16	17	18	18	19	20	20
	u *	10	10	10	11	11	12	12	13	13	13

* For Outlet End double No. of 'u' bars

CONCRETE QUANTITIES PER ADDITIONAL PIPE (C.Y.)

	PIPE DIA.	INLET END				OUTLET END			
		RT. ∢	15°	30°	45°	RT. ∢	15°	30°	45°
2:1 Slope	90"	7.2	7.5	8.0	10.2	7.8	8.3	9.2	11.6
	96"	7.8	8.1	8.7	11.1	8.5	8.9	9.9	12.6
	102"	8.5	8.8	9.4	12.0	9.2	9.6	10.7	13.6
	108"	9.1	9.4	10.1	12.9	9.8	10.3	11.4	14.6
	114"	9.8	10.2	10.9	13.8	10.6	11.1	12.3	15.6
	120"	10.5	10.9	11.7	14.9	11.3	11.8	13.2	16.7
	126"	11.2	11.6	12.5	15.9	12.0	12.6	14.0	17.8
	132"	12.0	12.4	13.4	17.0	12.8	13.4	15.0	18.9
	138"	12.8	13.2	14.3	18.0	13.7	14.2	15.9	20.0
	144"	13.6	14.0	15.2	19.2	14.5	15.1	16.9	21.3
4:1 Slope	90"	6.8	7.1	7.8	9.7	7.7	8.2	9.0	11.1
	96"	7.4	7.7	8.4	10.5	8.4	8.8	9.6	12.0
	102"	8.0	8.3	9.2	11.4	9.0	9.5	10.5	13.0
	108"	8.7	9.0	9.8	12.3	9.6	10.2	11.1	14.0
	114"	9.3	9.7	10.6	13.2	10.3	11.0	12.0	14.9
	120"	10.0	10.4	11.3	14.2	11.0	11.7	12.7	16.0
	126"	10.7	11.1	12.1	15.2	11.8	12.5	13.6	17.1
	132"	11.5	11.9	12.9	16.2	12.5	13.3	14.5	18.1
	138"	12.2	12.7	13.7	17.3	13.2	14.2	15.3	19.3
	144"	13.0	13.5	14.3	18.4	14.0	15.0	16.0	20.5
6:1 Slope	90"	6.4	6.7	7.7	9.1	7.6	7.8	8.9	10.5
	96"	7.0	7.3	8.3	9.9	8.2	8.4	9.5	11.4
	102"	7.6	7.9	8.9	10.8	8.8	9.1	10.2	12.4
	108"	8.2	8.5	9.6	11.6	9.3	9.7	10.9	13.3
	114"	8.9	9.2	10.3	12.5	10.1	10.5	11.7	14.2
	120"	9.5	9.9	11.0	13.5	10.7	11.2	12.5	15.3
	126"	10.2	10.6	11.7	14.5	11.4	12.0	13.2	16.4
	132"	11.0	11.3	12.4	15.5	12.2	12.7	14.0	17.4
	138"	11.7	12.1	13.2	16.5	12.8	13.6	14.8	18.5
	144"	12.5	12.9	14.0	17.6	13.6	14.4	15.7	19.7

REINF. BAR QUANTITIES PER ADDITIONAL PIPE (LBS.)

PIPE DIA.	INLET END												OUTLET END											
	RT. ∢			15°			30°			45°			RT. ∢			15°			30°			45°		
	2:1	4:1	6:1	2:1	4:1	6:1	2:1	4:1	6:1	2:1	4:1	6:1	2:1	4:1	6:1	2:1	4:1	6:1	2:1	4:1	6:1	2:1	4:1	6:1
90"	280	270	245	320	285	280	340	300	300	460	385	385	345	340	315	400	360	355	425	390	385	570	495	490
96"	320	320	280	350	335	300	365	355	320	560	460	440	395	395	355	425	415	375	450	445	405	670	565	550
102"	385	375	355	475	380	375	470	380	375	605	485	470	460	455	435	550	460	450	560	470	465	715	600	580
108"	475	465	380	505	420	410	500	410	400	680	640	540	550	545	460	590	505	495	595	510	495	800	760	660
114"	510	510	485	525	505	490	535	515	490	825	695	665	600	600	570	610	590	580	635	610	590	950	815	790
120"	530	530	505	630	545	525	640	530	520	875	735	705	615	615	595	720	635	615	745	640	620	1005	860	835
126"	565	565	540	670	565	545	695	565	550	915	760	740	650	650	630	770	660	640	800	675	660	1050	890	870
132"	715	710	610	725	640	595	725	590	570	1210	985	845	815	805	710	825	740	695	840	800	680	1350	1125	985
138"	770	770	735	790	770	765	785	730	605	1275	1055	1015	870	825	835	895	880	870	905	850	725	1420	1195	1155
144"	800	800	770	965	820	780	835	775	745	1330	1085	1045	905	905	875	1075	930	890	955	900	865	1475	1225	1190

BAR LENGTH ADJUSTMENT PER ADDITIONAL PIPE (FT.)

SKEW	MARK *	PIPE DIA. (Inches)									
		90"	96"	102"	108"	114"	120"	126"	132"	138"	144"
RT.∢	j, n1, n2, p, q	10'-6	11'-0	11'-6	12'-0	12'-6	13'-0	13'-6	14'-0	14'-6	15'-0
15°	g, n1, n2, p, q	10'-9	11'-3	12'-0	12'-6	13'-0	13'-6	14'-0	14'-6	15'-0	15'-6
30°	g, n1, n2, p, q	12'-0	12'-9	13'-3	13'-9	14'-6	15'-0	15'-6	16'-3	16'-9	17'-3
45°	g, n1, n2, p, q	14'-9	15'-6	16'-3	17'-0	17'-9	18'-3	19'-0	19'-9	20'-6	21'-3

* Increase bar lengths for single pipes by dimensions in table for each additional pipe.

NOTES:

Multipipe culvert headwall quantities are obtained by multiplying quantity shown in tables by the number of additional pipes and adding to single pipe headwall quantity.
Number of bars and quantities shown in tables are for one headwall.

DESIGN	K. W.	4-92
DRAWN	C. H.	4-92
CHECKED	G.K.	4-92

NO	DESCRIPTION OF REVISIONS	MADE BY	DATE
1			
2			
3			
4			

DESIGN APPROVED

APPROVED FOR DISTRIBUTION

ARIZONA
DEPARTMENT OF TRANSPORTATION
HIGHWAYS DIVISION
STANDARD DRAWINGS

MULTIPIPE HEADWALLS
WITHOUT APRON

REVISION 4-92

STANDARD NO. B-16.10

ZF1:(051020)S81610.DGN;2 VIEW NAME: BR
08-MAY-1992 10:31

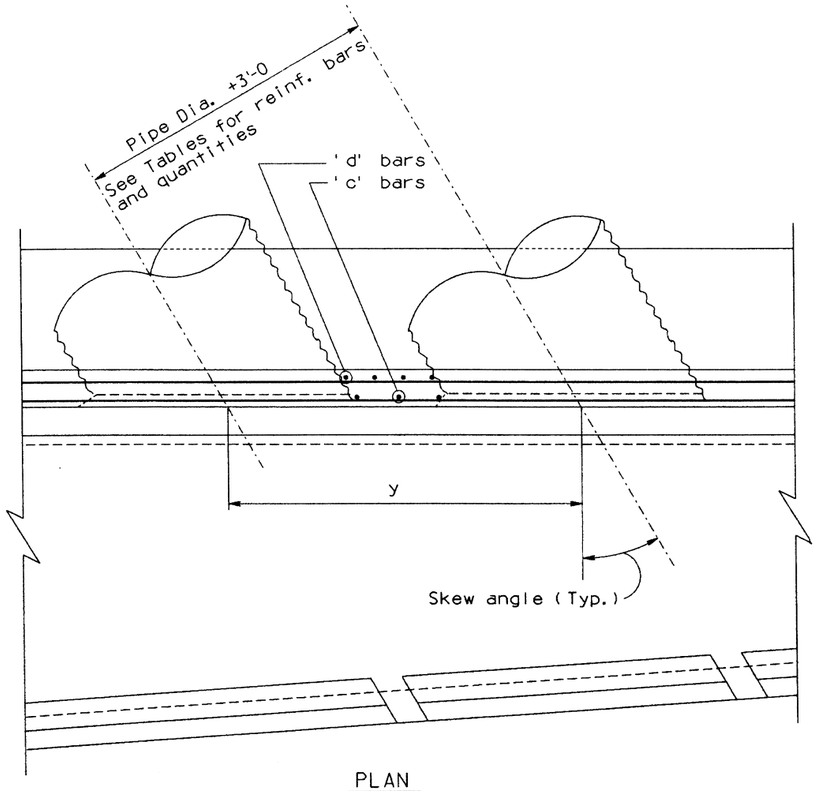

PLAN

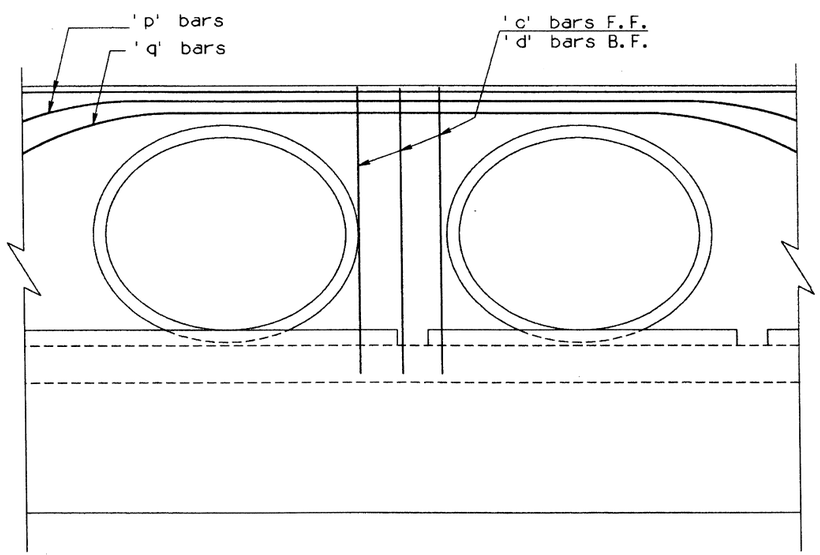

ELEVATION

DIMENSION Y (FT.)

SKEW	PIPE DIA. (Inches)									
	90"	96"	102"	108"	114"	120"	126"	132"	138"	144"
RT. ∢	10'-6	11'-0	11'-6	12'-0	12'-6	13'-0	13'-6	14'-0	14'-6	15'-0
15°	10'-10 1/2	11'-4 5/8	11'-10 7/8	12'-5 1/8	12'-11 1/4	13'-5 1/2	13'-11 3/4	14'-5 7/8	15'-0 1/8	15'-6 3/8
30°	12'-1 1/2	12'-8 3/8	13'-3 3/8	13'-10 1/4	14'-5 1/4	15'-0 1/8	15'-7	16'-2	16'-8 7/8	17'-3 7/8
45°	14'-10 1/4	15'-6 5/8	16'-3 1/8	16'-11 5/8	17'-8 1/8	18'-4 5/8	19'-1 1/8	19'-9 5/8	20'-6 1/8	21'-2 1/2

BAR LENGTH ADJUSTMENT PER ADDITIONAL PIPE (FT.)

SKEW	MARK *	PIPE DIA. (Inches)									
		90"	96"	102"	108"	114"	120"	126"	132"	138"	144"
RT. ∢	j, n1, n2, p, q and t1 to t7	10'-6	11'-0	11'-6	12'-0	12'-6	13'-0	13'-6	14'-0	14'-6	15'-0
15°	g, n1, n2, p, q and t1 to t11	10'-9	11'-3	12'-0	12'-6	13'-0	13'-6	14'-0	14'-6	15'-0	15'-6
30°	g, n1, n2, p, q and t1 to t10	12'-0	12'-9	13'-3	13'-9	14'-6	15'-0	15'-6	16'-3	16'-9	17'-3
45°	g, n1, n2, p, q and t1 to t10	14'-9	15'-6	16'-3	17'-0	17'-9	18'-3	19'-0	19'-9	20'-6	21'-3

* Increase bar length for single pipes by dimensions in table for each additional pipe.

REINF. BAR QUANTITIES PER ADDITIONAL PIPE (LBS.)

PIPE DIA.	RT. ∢			15°			30°			45°		
	2:1	4:1	6:1	2:1	4:1	6:1	2:1	4:1	6:1	2:1	4:1	6:1
90"	550	630	710	605	660	710	645	640	735	770	730	840
96"	585	710	765	650	740	780	695	720	800	910	850	940
102"	740	800	880	680	790	860	825	805	925	970	940	1020
108"	770	915	940	850	905	985	905	870	980	1070	1095	1120
114"	895	1000	1035	905	1030	1035	960	1010	1145	1260	1175	1305
120"	980	1045	1155	970	1105	1195	1100	1065	1210	1350	1270	1410
126"	1055	1120	1255	1125	1165	1260	1180	1180	1335	1395	1320	1470
132"	1220	1300	1330	1205	1300	1410	1275	1240	1395	1690	1615	1640
138"	1355	1415	1485	1400	1460	1475	1370	1425	1495	1825	1715	1690
144"	1425	1475	1630	1485	1550	1660	1415	1520	1682	1910	1775	1775

No. OF ADDITIONAL BARS REQUIRED FOR ADDITIONAL PIPE

SKEW	MARK	PIPE DIA. (Inches)									
		90	96	102	108	114	120	126	132	138	144
RT. ∢	c	3	3	3	3	3	3	3	3	3	3
	d	4	4	4	4	4	4	4	4	4	4
	e8, r1, s	10	10	11	11	12	12	13	13	14	14
	h, k	6	7	7	7	8	8	8	9	9	10
15°	c	3	3	3	3	3	3	3	3	3	3
	d	4	4	4	4	4	4	4	4	4	4
	e8, r1, s	10	11	11	12	12	13	13	14	14	15
	h, k	7	7	7	8	8	8	9	9	10	10
30°	c	3	3	3	3	3	3	3	3	3	3
	d	4	4	4	4	4	4	4	4	4	4
	e9, r1, s	11	12	13	13	14	14	15	15	16	17
	h, k	8	8	8	9	9	10	10	10	11	11
45°	c	4	4	4	4	4	4	4	4	4	4
	d	5	5	5	5	5	5	5	5	5	5
	e9, r1, s	14	15	16	16	17	18	18	19	20	20
	h, k	10	10	10	11	11	12	12	13	13	13

CONCRETE QUANTITIES PER ADDITIONAL PIPE (C.Y.)

PIPE DIA.	RT. ∢			15°			30°			45°		
	2:1	4:1	6:1	2:1	4:1	6:1	2:1	4:1	6:1	2:1	4:1	6:1
90"	10.6	12.4	13.0	11.1	12.8	13.3	12.4	13.3	14.1	15.2	15.7	16.0
96"	11.7	13.5	14.2	12.0	13.8	14.4	13.3	14.3	15.2	16.5	17.1	17.4
102"	12.7	14.5	15.3	12.9	14.9	15.7	14.4	15.7	16.3	17.8	18.6	19.0
108"	13.7	15.6	16.4	13.9	16.1	17.0	15.4	16.7	17.6	19.2	20.2	20.4
114"	14.6	16.7	17.8	14.9	17.3	18.4	16.6	18.1	18.9	20.5	21.6	21.9
120"	16.1	17.9	19.0	15.9	18.5	19.8	17.8	19.3	20.3	21.9	23.3	23.7
126"	17.0	19.2	20.5	17.0	19.9	21.3	18.9	20.8	21.6	23.5	25.1	25.5
132"	18.3	20.4	21.9	18.1	21.2	22.7	20.2	22.3	23.0	25.0	26.7	27.1
138"	19.6	21.7	23.3	19.2	22.6	24.4	21.5	23.6	24.4	26.4	28.5	28.8
144"	20.9	23.1	24.8	20.4	24.0	26.0	22.8	25.0	25.9	28.1	30.5	30.8

NOTES:

Multipipe culvert headwall quantities are obtained by multiplying quantity shown in tables by the number of additional pipes and adding to single pipe headwall quantity.
Number of bars and quantities shown in tables are for one headwall.

DESIGN	K. W.	4-92
DRAWN	C. H.	4-92
CHECKED	G. K.	4-92

NO	DESCRIPTION OF REVISIONS	MADE BY	DATE
1			
2			
3			
4			

Registered Professional Engineer (Civil) CERTIFICATE NO. 9910 F. DANIEL DAVIS Arizona U.S.A.

DESIGN APPROVED: F. Daniel Davis

APPROVED FOR DISTRIBUTION: Richard Wright

ARIZONA
DEPARTMENT OF TRANSPORTATION
HIGHWAYS DIVISION
STANDARD DRAWINGS

MULTIPIPE HEADWALLS WITH OUTLET APRON

REVISION

STANDARD NO. B-16.20

ZF1:(0510201SB1620.DGN)2 VIEW NAME: BR
08-MAY-1992 10:32

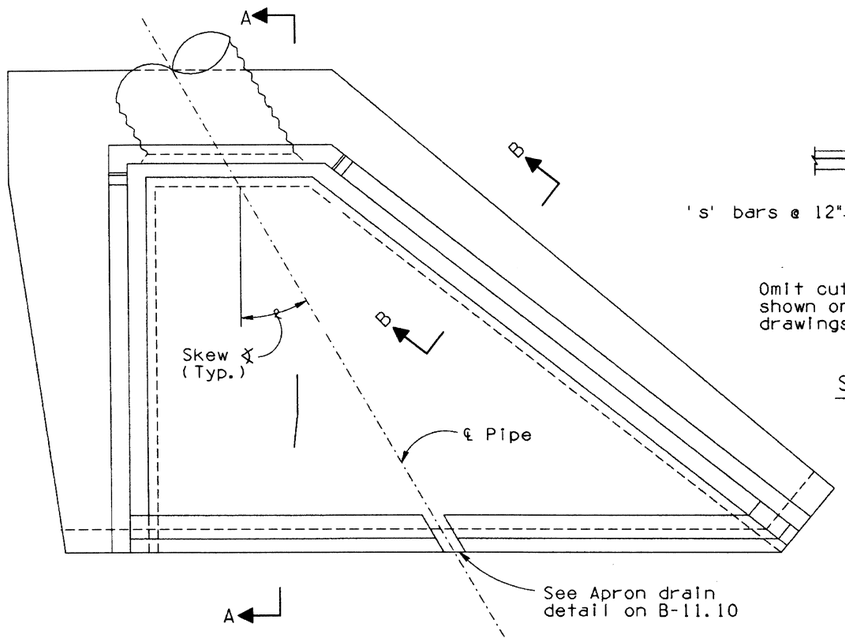

TYPICAL PLAN - HEADWALL WITH APRON

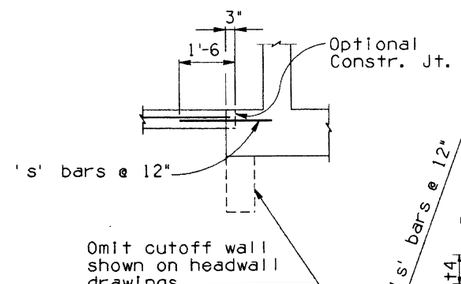

SECTION B-B

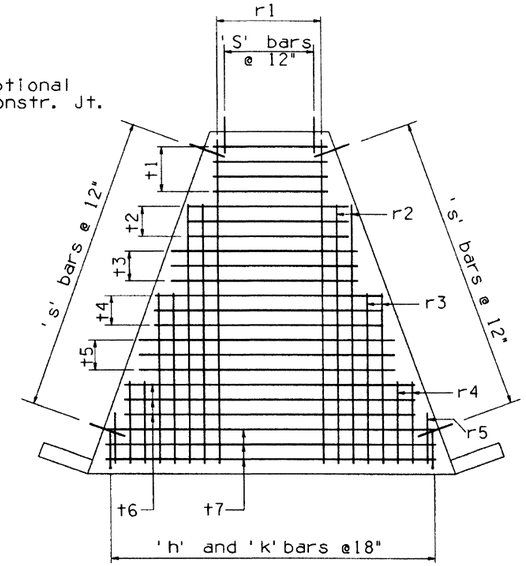

RIGHT ANGLE

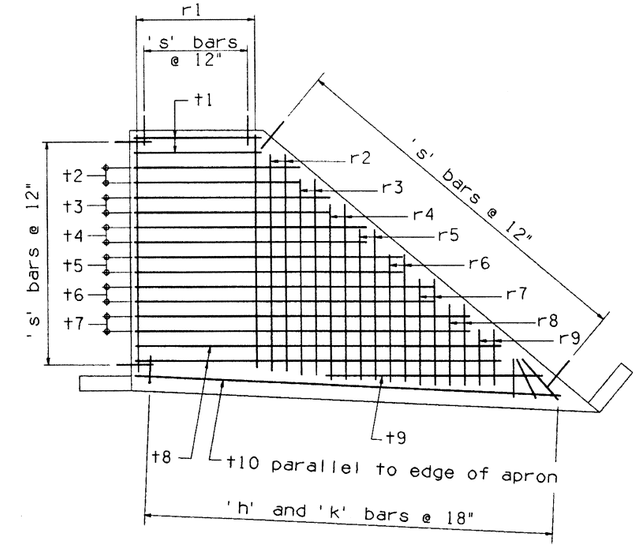

30° SKEW

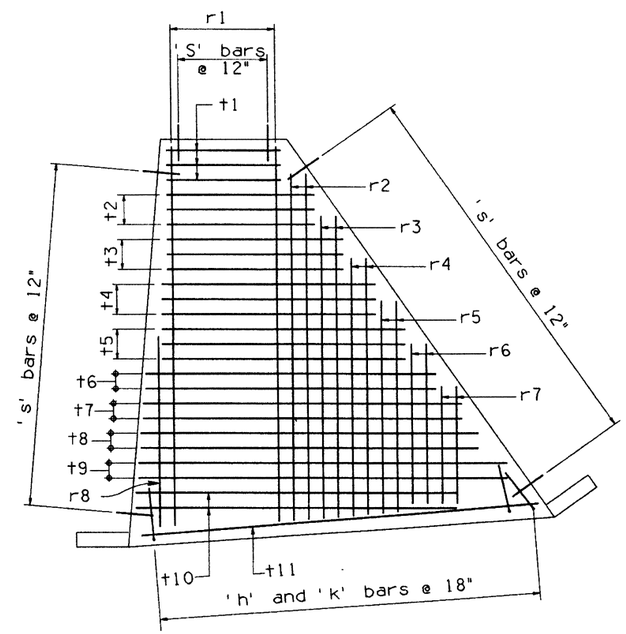

15° SKEW

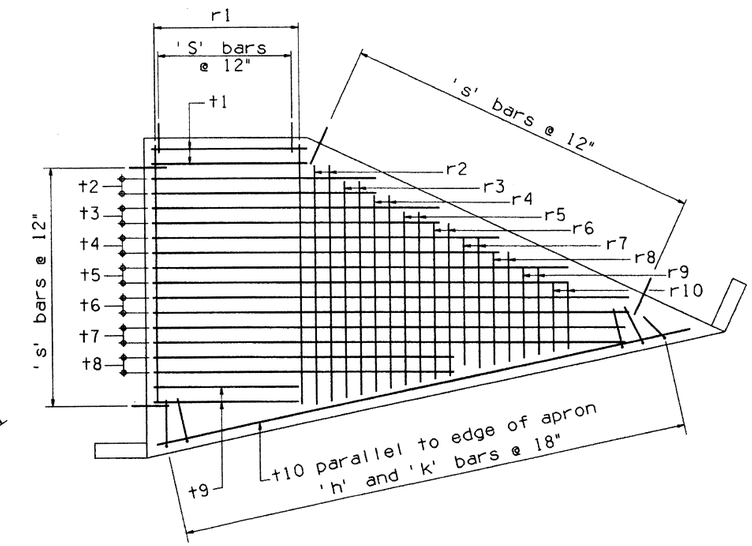

45° SKEW

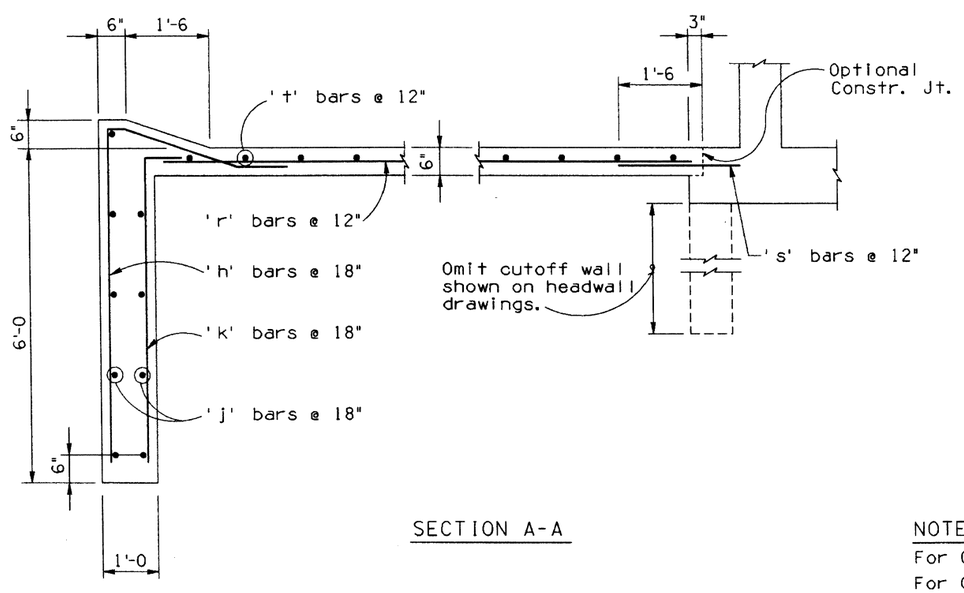

SECTION A-A

NOTES:

For General Notes and Misc. Details see B-11.10

For Quantities, Steel List and Bend Diagrams see B-17.20, B-17.30 or B-17.40

DESIGN	K.W.	4-92	NO	DESCRIPTION OF REVISIONS	MADE BY	DATE
DRAWN	C.H.	4-92	1			
CHECKED	G.K	4-92	2			
			3			
			4			

Registered Professional Engineer (Civil) 9910 F. DANIEL DAVIS Arizona U.S.A.	DESIGN APPROVED	ARIZONA DEPARTMENT OF TRANSPORTATION HIGHWAYS DIVISION STANDARD DRAWINGS	REVISION 4-92
	APPROVED FOR DISTRIBUTION	OUTLET APRONS	STANDARD NO. B-17.10

ZF1:(051020)SB1710.DGN;1 VIEW NAME:
08-MAY-1992 10:40

Mark	Bend	RIGHT ANGLE																					
		90" Φ		96" Φ		102" Φ		108" Φ		114" Φ		120" Φ		126" Φ		132" Φ		138" Φ		144" Φ			
		No	Lgth	No	Lgth	No	Lgth	No	Lgth	No	Lgth	No	Lgth	No	Lgth	No	Lgth	No	Lgth	No	Lgth		
h	D	15	9'-3	16	9'-3	16	9'-3	17	9'-3	18	9'-3	19	9'-3	19	9'-3	20	9'-3	20	9'-3	21	9'-3		
j	str	8	17'-0	8	18'-0	8	19'-0	8	20'-0	8	21'-0	8	22'-0	8	23'-0	8	24'-0	8	25'-0	8	26'-0		
k	E	15	7'-0	16	7'-0	16	7'-0	17	7'-0	18	7'-0	19	7'-0	19	7'-0	20	7'-0	20	7'-0	21	7'-0		
r1	str	9	10'-6	9	11'-3	9	12'-3	9	13'-3	9	14'-0	11	15'-6	11	16'-0	11	17'-0	11	17'-9	13	18'-6		
r2	str	4	5'-6	4	7'-0	4	8'-6	4	10'-0	4	11'-0	4	11'-0	4	12'-0	4	14'-0	4	15'-0	4	14'-0		
r3	str					2	6'-0	2	7'-6	4	6'-0	2	8'-0	4	7'-0	4	8'-0	4	9'-6	4	8'-6		
r4	str																	2	7'-0	2	4'-6		
r5	str																						
s	str	31	2'-0	33	2'-0	36	2'-0	38	2'-0	41	2'-0	43	2'-0	46	2'-0	48	2'-0	51	2'-0	53	2'-0		
t1	str	3	8'-0	3	8'-6	3	8'-9	3	9'-3	3	9'-9	3	10'-3	3	10'-9	3	11'-0	4	11'-6	4	12'-0		
t2	str	3	10'-3	3	11'-0	3	11'-0	3	11'-6	3	12'-0	3	12'-3	3	12'-9	3	13'-3	3	14'-0	4	15'-0		
t3	str	3	12'-3	3	13'-3	3	13'-0	3	13'-6	3	14'-6	3	14'-3	3	14'-9	3	15'-6	3	16'-6	3	18'-0		
t4	str	3	14'-6	3	15'-9	2	15'-0	3	15'-9	3	16'-9	3	16'-0	3	17'-0	3	17'-6	3	18'-9	3	20'-3		
t5	str					2	16'-9	2	18'-0	3	19'-3	3	18'-0	3	19'-0	3	19'-9	3	21'-3	3	22'-6		
t6	str											2	20'-0	2	21'-0	3	22'-0	3	23'-9	3	25'-0		
t7	str																						

Mark	Bend	15° SKEW																					
		90" Φ		96" Φ		102" Φ		108" Φ		114" Φ		120" Φ		126" Φ		132" Φ		138" Φ		144" Φ			
		No	Lgth	No	Lgth	No	Lgth	No	Lgth	No	Lgth	No	Lgth	No	Lgth	No	Lgth	No	Lgth	No	Lgth		
h	D	13	9'-3	14	9'-3	14	9'-3	15	9'-3	15	9'-3	16	9'-3	16	9'-3	17	9'-3	17	9'-3	18	9'-3		
j	str	8	19'-0	8	19'-9	8	20'-6	8	21'-3	8	22'-0	8	22'-9	8	23'-6	8	24'-6	8	25'-3	8	26'-0		
k	E	13	7'-0	14	7'-0	14	7'-0	15	7'-0	15	7'-0	16	7'-0	16	7'-0	17	7'-0	17	7'-0	18	7'-0		
r1	str	9	11'-0	9	11'-6	10	12'-0	10	12'-3	10	12'-9	11	13'-3	12	13'-9	12	14'-3	12	14'-9	13	15'-0		
r2	str	2	9'-3	2	9'-9	2	9'-3	2	10'-3	3	9'-3	2	11'-6	2	11'-0	2	12'-0	2	12'-6	2	13'-0		
r3	str	2	6'-9	2	7'-0	2	6'-3	2	7'-6	2	6'-6	2	9'-3	2	8'-3	2	9'-0	2	9'-0	2	10'-3		
r4	str	2	4'-0	2	4'-3	2	3'-6	2	4'-9	2	4'-0	2	7'-3	2	5'-6	2	6'-0	2	5'-6	2	7'-6		
r5	str																						
r6	str																						
r7	str																						
r8	str																						
s	str	34	2'-0	36	2'-0	37	2'-0	38	2'-0	40	2'-0	41	2'-0	42	2'-0	44	2'-0	45	2'-0	46	2'-0		
t1	str	2	8'-0	2	8'-6	3	9'-0	3	9'-6	2	10'-0	2	10'-6	3	11'-0	3	11'-6	2	12'-0	2	12'-6		
t2	str	2	9'-6	2	10'-3	2	10'-9	2	11'-3	2	11'-6	2	12'-0	2	12'-9	2	13'-3	2	13'-6	2	14'-3		
t3	str	2	11'-3	2	11'-9	2	12'-6	2	13'-0	2	13'-3	2	13'-9	2	14'-6	2	15'-0	2	15'-3	2	16'-0		
t4	str	2	13'-0	2	13'-6	2	14'-6	2	15'-0	2	15'-0	2	15'-6	2	16'-6	2	17'-0	2	17'-0	2	17'-6		
t5	str	2	14'-9	2	15'-3	2	16'-3	2	16'-9	2	16'-6	2	17'-0	2	18'-3	2	18'-6	2	18'-6	2	19'-3		
t6	str	2	16'-9	2	17'-0	2	18'-0	2	18'-6	2	18'-3	2	18'-9	2	20'-3	2	20'-3	2	20'-3	2	21'-0		
t7	str									2	20'-0	2	20'-6	2	22'-0	2	22'-0	2	21'-9	2	22'-9		
t8	str																	2	23'-6	2	24'-6		
t9	str																						
t10	str																						
t11	str	1	18'-0	1	18'-6	1	19'-3	1	20'-0	1	20'-6	1	21'-3	1	22'-0	1	22'-6	1	23'-3	1	24'-0		

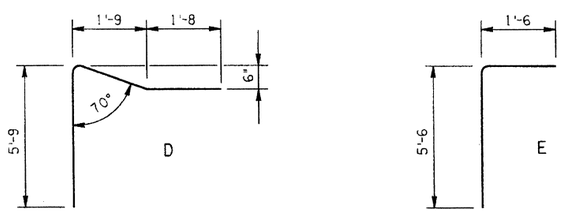

BENDS

Mark	Bend	30° SKEW																					
		90" Φ		96" Φ		102" Φ		108" Φ		114" Φ		120" Φ		126" Φ		132" Φ		138" Φ		144" Φ			
		No	Lgth	No	Lgth	No	Lgth	No	Lgth	No	Lgth	No	Lgth	No	Lgth	No	Lgth	No	Lgth	No	Lgth		
h	D	15	9'-3	16	9'-3	17	9'-3	17	9'-3	18	9'-3	19	9'-3	20	9'-3	20	9'-3	21	9'-3	22	9'-3		
j	str	8	22'-0	8	23'-3	8	24'-6	8	25'-6	8	26'-9	8	28'-0	8	29'-3	8	30'-6	8	31'-9	8	33'-0		
k	E	15	7'-0	16	7'-0	17	7'-0	17	7'-0	18	7'-0	19	7'-0	20	7'-0	20	7'-0	21	7'-0	22	7'-0		
r1	str	9	10'-6	10	11'-0	10	11'-6	11	12'-0	11	12'-6	12	13'-0	13	13'-6	13	14'-0	14	14'-6	14	15'-0		
r2	str	2	9'-0	2	9'-6	2	10'-0	2	10'-6	2	11'-6	2	11'-6	2	12'-0	2	13'-0	2	13'-0	2	14'-0		
r3	str	2	7'-3	2	7'-9	2	8'-3	2	8'-9	2	9'-9	2	9'-9	2	10'-3	2	11'-3	2	11'-6	2	12'-6		
r4	str	2	5'-9	2	6'-3	2	6'-9	2	7'-3	2	8'-3	2	8'-3	2	8'-9	2	9'-6	2	10'-0	2	10'-9		
r5	str	2	4'-0	2	4'-6	2	5'-0	2	5'-6	2	6'-6	2	6'-6	2	7'-0	2	7'-9	2	8'-6	2	9'-3		
r6	str									1	6'-0	1	6'-0	1	6'-0	2	6'-0	2	7'-0	2	7'-6		
r7	str																			2	6'-0		
r8	str																						
r9	str																						
s	str	33	2'-0	35	2'-0	37	2'-0	39	2'-0	41	2'-0	43	2'-0	45	2'-0	47	2'-0	49	2'-0	51	2'-0		
t1	str	2	9'-3	2	9'-9	2	10'-3	2	11'-0	2	11'-6	2	12'-0	2	12'-6	2	13'-0	2	13'-9	2	14'-3		
t2	str	2	11'-9	2	12'-0	2	12'-6	2	13'-6	2	13'-9	2	14'-6	2	14'-9	2	15'-3	2	16'-0	2	16'-6		
t3	str	2	14'-0	2	14'-6	2	15'-0	2	15'-9	2	16'-0	2	16'-9	2	17'-3	2	17'-9	2	18'-6	2	18'-9		
t4	str	2	16'-6	2	16'-9	2	17'-3	2	18'-3	2	18'-6	2	19'-3	2	19'-6	2	20'-0	2	20'-9	2	21'-0		
t5	str	2	19'-0	2	19'-3	2	19'-6	2	20'-6	2	20'-9	2	21'-6	2	21'-9	2	22'-6	2	23'-3	2	23'-6		
t6	str					1	22'-0	2	33'-0	2	23'-0	2	24'-0	2	24'-3	2	24'-9	2	25'-6	2	25'-9		
t7	str													1	26'-6	1	27'-3	2	28'-0	2	28'-0		
t8	str																						
t9	str											1	15'-0			1	16'-0			1	23'-0		
t10	str	1	21'-6	1	22'-9	1	24'-0	1	25'-3	1	26'-6	1	27'-9	1	29'-0	1	30'-3	1	31'-6	1	32'-9		

Mark	Bend	45° SKEW																					
		90" Φ		96" Φ		102" Φ		108" Φ		114" Φ		120" Φ		126" Φ		132" Φ		138" Φ		144" Φ			
		No	Lgth	No	Lgth	No	Lgth	No	Lgth	No	Lgth	No	Lgth	No	Lgth	No	Lgth	No	Lgth	No	Lgth		
h	D	21	9'-3	22	9'-3	23	9'-3	24	9'-3	25	9'-3	26	9'-3	27	9'-3	28	9'-3	29	9'-3	30	9'-3		
j	str	8	31'-0	8	32'-6	8	34'-0	8	35'-6	8	37'-3	8	38'-9	8	40'-3	8	41'-9	8	43'-6	8	45'-0		
k	E	21	7'-0	22	7'-0	23	7'-0	24	7'-0	25	7'-0	26	7'-0	27	7'-0	28	7'-0	29	7'-0	30	7'-0		
r1	str	11	9'-0	12	9'-6	13	10'-0	14	10'-6	14	11'-0	15	11'-6	16	12'-0	16	12'-6	17	13'-0	17	13'-6		
r2	str	3	7'-9	3	8'-6	3	8'-9	3	9'-3	3	9'-9	3	10'-0	3	10'-6	3	11'-0	3	11'-6	3	12'-6		
r3	str	3	6'-3	3	7'-0	3	7'-3	3	7'-9	3	8'-6	3	8'-9	3	9'-3	3	9'-9	3	10'-3	3	11'-0		
r4	str	3	5'-0	3	5'-9	3	5'-9	3	6'-6	3	7'-6	3	7'-3	3	7'-9	3	8'-3	3	8'-9	3	9'-6		
r5	str	3	3'-6	3	4'-3	3	4'-6	3	5'-0	2	6'-3	3	6'-0	3	6'-6	3	7'-0	3	7'-3	3	8'-0		
r6	str									2	5'-3	3	4'-6	2	5'-6	2	6'-0	2	6'-6	3	6'-6		
r7	str													2	4'-6	2	5'-0	2	5'-6	3	5'-0		
r8	str																			2	4'-0		
r9	str																						
r10	str																						
s	str	39	2'-0	41	2'-0	43	2'-0	45	2'-0	47	2'-0	49	2'-0	51	2'-0	53	2'-0	55	2'-0	57	2'-0		
t1	str	2	12'-0	2	12'-9	2	13'-3	2	14'-0	2	14'-9	2	15'-3	2	16'-0	2	16'-9	2	17'-3	2	18'-0		
t2	str	2	16'-0	2	16'-9	2	17'-3	2	18'-0	2	18'-6	2	19'-3	2	20'-3	2	20'-9	2	21'-6	2	22'-3		
t3	str	2	20'-0	2	20'-9	2	21'-6	2	22'-3	2	22'-6	2	23'-6	2	24'-6	2	25'-0	2	25'-6	2	26'-6		
t4	str	2	24'-0	2	24'-9	2	25'-9	2	26'-6	2	26'-3	2	27'-9	2	28'-9	2	29'-3	2	29'-9	2	30'-6		
t5	str	1	28'-0	1	28'-9	1	30'-0	2	30'-6	2	30'-3	2	31'-9	2	33'-0	2	33'-3	2	34'-0	2	34'-9		
t6	str									1	34'-0	1	36'-0	1	37'-3	2	37'-6	2	38'-0	2	39'-0		
t7	str																						
t8	str																						
t9	str																			1	28'-0		
t10	str	1	30'-6	1	32'-0	1	33'-6	1	35'-3	1	36'-9	1	38'-3	1	39'-9	1	41'-3	1	43'-0	1	44'-6		

QUANTITIES

	PIPE DIA.	REINF. LBS.	CONCRETE C.Y.
RIGHT ANGLE	90"	115	2.2
	96"	125	2.5
	102"	140	2.7
	108"	160	3.0
	114"	195	3.3
	120"	235	3.8
	126"	245	4.1
	132"	275	4.6
	138"	305	5.0
	144"	345	5.5
15° SKEW	90"	95	2.8
	96"	105	3.0
	102"	120	3.2
	108"	130	3.4
	114"	150	3.7
	120"	170	4.0
	126"	185	4.3
	132"	200	4.6
	138"	220	4.9
	144"	250	5.1
30° SKEW	90"	150	3.4
	96"	170	3.8
	102"	185	4.1
	108"	225	4.5
	114"	235	4.8
	120"	255	5.2
	126"	285	5.7
	132"	305	6.2
	138"	330	6.6
	144"	370	7.1
45° SKEW	90"	230	5.6
	96"	255	6.0
	102"	270	6.4
	108"	315	6.8
	114"	345	7.4
	120"	385	7.9
	126"	405	8.5
	132"	450	9.0
	138"	475	9.5
	144"	525	10.2

NOTE:

All reinforcing bars are #4.
The apron quantities take into consideration the cutoff walls being omitted along outlet headwalls.

DESIGN	K.W.	4-92	NO	DESCRIPTION OF REVISIONS	MADE BY	DATE
DRAWN	C.H.	4-92	1			
CHECKED	G.K.	4-92	2			
			3			
			4			

DESIGN APPROVED

APPROVED FOR DISTRIBUTION

ARIZONA
DEPARTMENT OF TRANSPORTATION
HIGHWAYS DIVISION
STANDARD DRAWINGS

OUTLET APRON STEEL LIST
2:1 SLOPE

REVISION 4-92

STANDARD NO. B-17.20

ZF1:(05180205B1720.DGN;5 VIEW NAME: BR
08-MAY-1992 10:42

RIGHT ANGLE

Mark	Bend	90" Φ		96" Φ		102" Φ		108" Φ		114" Φ		120" Φ		126" Φ		132" Φ		138" Φ		144" Φ	
		No	Lgth	No	Lgth	No	Lgth	No	Lgth	No	Lgth	No	Lgth	No	Lgth	No	Lgth	No	Lgth	No	Lgth
h	D	16	9'-3	17	9'-3	18	9'-3	18	9'-3	19	9'-3	20	9'-3	21	9'-3	21	9'-3	22	9'-3	23	9'-3
j	str	8	24'-0	8	25'-0	8	26'-0	8	27'-0	8	28'-0	8	29'-0	8	30'-0	8	31'-0	8	32'-0	8	33'-0
k	E	16	7'-0	17	7'-0	18	7'-0	18	7'-0	19	7'-0	20	7'-0	21	7'-0	21	7'-0	22	7'-0	23	7'-0
r1	str	9	20'-0	9	21'-0	9	21'-9	9	22'-9	9	23'-9	11	24'-9	11	25'-6	11	26'-6	11	27'-6	13	28'-6
r2	str	4	15'-0	4	15'-6	4	17'-0	4	18'-6	4	18'-6	4	20'-0	4	20'-6	4	23'-0	4	24'-0	4	23'-6
r3	str	4	9'-9	4	10'-0	4	11'-6	4	13'-0	4	13'-6	4	15'-6	4	15'-0	4	17'-6	4	18'-6	4	17'-9
r4	str	2	7'-0	2	7'-6	2	9'-0	2	10'-6	4	9'-6	2	11'-0	4	10'-0	4	12'-0	4	13'-0	4	12'-0
r5	str																	2	10'-6	2	9'-0
s	str	51	2'-0	53	2'-0	56	2'-0	58	2'-0	61	2'-0	63	2'-0	66	2'-0	68	2'-0	71	2'-0	73	2'-0
t1	str	3	8'-0	4	8'-6	4	9'-0	4	9'-6	4	10'-0	4	10'-6	4	11'-0	4	11'-6	4	12'-0	5	12'-6
t2	str	3	10'-3	3	11'-0	4	11'-6	4	12'-0	4	12'-9	4	13'-3	4	13'-9	4	14'-6	4	15'-0	4	15'-6
t3	str	3	12'-6	3	13'-3	3	14'-0	4	14'-6	4	15'-3	4	16'-0	4	16'-9	4	17'-3	4	18'-0	4	18'-6
t4	str	3	15'-0	3	15'-9	3	16'-6	3	17'-3	3	18'-0	4	18'-9	4	19'-6	4	20'-3	4	21'-0	4	21'-9
t5	str	3	17'-3	3	18'-3	3	19'-0	3	19'-9	3	20'-9	3	21'-6	4	22'-3	4	23'-3	4	24'-0	4	24'-9
t6	str	3	19'-6	3	20'-6	3	21'-6	3	22'-6	3	23'-3	3	24'-3	3	25'-3	4	26'-0	4	27'-0	4	28'-0
t7	str	3	22'-0	3	23'-0	3	24'-0	3	25'-0	3	26'-0	3	27'-0	3	28'-0	3	29'-0	4	30'-0	4	31'-0

15° SKEW

Mark	Bend	90" Φ		96" Φ		102" Φ		108" Φ		114" Φ		120" Φ		126" Φ		132" Φ		138" Φ		144" Φ	
		No	Lgth	No	Lgth	No	Lgth	No	Lgth	No	Lgth	No	Lgth	No	Lgth	No	Lgth	No	Lgth	No	Lgth
h	D	16	9'-3	17	9'-3	17	9'-3	18	9'-3	19	9'-3	19	9'-3	20	9'-3	21	9'-3	21	9'-3	22	9'-3
j	str	8	23'-0	8	24'-0	8	25'-0	8	26'-0	8	27'-0	8	28'-0	8	29'-0	8	30'-0	8	31'-0	8	32'-0
k	E	16	7'-0	17	7'-0	17	7'-0	18	7'-0	19	7'-0	19	7'-0	20	7'-0	21	7'-0	21	7'-0	22	7'-0
r1	str	8	18'-6	9	19'-3	9	20'-3	9	21'-0	10	22'-0	10	23'-0	11	23'-9	12	24'-9	12	25'-6	13	26'-6
r2	str	2	16'-6	2	17'-0	2	18'-6	2	20'-0	2	20'-0	2	20'-6	2	22'-0	2	22'-0	2	23'-0	3	23'-0
r3	str	2	13'-6	2	14'-0	2	15'-6	2	17'-0	2	17'-6	2	18'-0	2	18'-9	2	19'-0	2	20'-0	3	18'-6
r4	str	2	10'-6	2	11'-0	2	12'-6	2	14'-0	2	14'-3	2	14'-9	2	15'-9	2	16'-0	2	17'-0	2	15'-6
r5	str	2	7'-6	2	8'-0	2	9'-6	2	11'-0	2	10'-9	2	11'-3	2	12'-6	2	13'-0	2	14'-0	2	12'-6
r6	str	2	4'-6	2	5'-0	2	6'-6	2	8'-0	2	7'-6	2	8'-0	2	9'-6	2	10'-0	2	11'-0	2	9'-6
r7	str															2	7'-0	2	8'-0	2	6'-6
r8	str	1	9'-0	1	9'-9	1	10'-6	1	11'-3	1	11'-9	1	12'-6	1	13'-3	1	14'-0	1	14'-9	1	15'-6
s	str	47	2'-0	50	2'-0	53	2'-0	56	2'-0	59	2'-0	62	2'-0	65	2'-0	68	2'-0	71	2'-0	74	2'-0
t1	str	2	8'-6	3	9'-0	2	9'-6	3	10'-0	3	10'-3	3	10'-9	3	11'-3	3	11'-9	3	12'-3	3	12'-9
t2	str	2	10'-0	2	11'-0	2	11'-0	2	12'-0	3	12'-6	3	13'-0	3	13'-6	3	14'-3	3	14'-6	3	15'-0
t3	str	2	11'-6	2	12'-6	2	12'-6	2	13'-6	2	15'-0	3	15'-3	3	16'-0	3	16'-9	3	17'-0	3	17'-3
t4	str	2	13'-0	2	14'-0	2	14'-3	2	15'-0	2	16'-9	2	17'-6	3	18'-3	3	19'-0	3	19'-3	3	19'-6
t5	str	2	14'-6	2	15'-6	2	15'-9	2	16'-6	2	18'-3	2	19'-0	2	20'-9	3	21'-6	3	21'-9	3	22'-0
t6	str	2	16'-0	2	17'-0	2	17'-3	2	18'-0	2	20'-0	2	20'-9	2	22'-3	2	23'-6	3	24'-0	3	24'-3
t7	str	2	17'-6	2	18'-6	2	18'-9	2	19'-6	2	21'-9	2	22'-3	2	23'-9	2	25'-0	2	26'-0	3	26'-6
t8	str	2	19'-0	2	20'-0	2	20'-6	2	21'-0	2	23'-3	2	24'-0	2	25'-6	2	26'-6	2	27'-6	2	28'-6
t9	str	2	21'-6	2	21'-6	2	22'-0	2	22'-6	2	25'-0	2	25'-6	2	27'-0	2	28'-0	2	29'-0	2	30'-0
t10	str					2	21'-0	2	22'-0	2	19'-0	2	21'-0	2	24'-0	2	17'-0	2	21'-0	1	23'-0
t11	str	1	21'-6	1	22'-6	1	23'-6	1	24'-6	1	25'-6	1	26'-6	1	27'-6	1	28'-6	1	29'-6	1	30'-6

30° SKEW

Mark	Bend	90" Φ		96" Φ		102" Φ		108" Φ		114" Φ		120" Φ		126" Φ		132" Φ		138" Φ		144" Φ	
		No	Lgth	No	Lgth	No	Lgth	No	Lgth	No	Lgth	No	Lgth	No	Lgth	No	Lgth	No	Lgth	No	Lgth
h	D	19	9'-3	20	9'-3	21	9'-3	22	9'-3	23	9'-3	24	9'-3	25	9'-3	26	9'-3	27	9'-3	28	9'-3
j	str	8	30'-0	8	31'-3	8	32'-6	8	33'-9	8	35'-0	8	36'-0	8	37'-3	8	38'-6	8	39'-9	8	41'-0
k	E	19	7'-0	20	7'-0	21	7'-0	22	7'-0	23	7'-0	24	7'-0	25	7'-0	26	7'-0	27	7'-0	28	7'-0
r1	str	9	15'-6	10	16'-3	11	17'-3	11	18'-0	11	19'-0	12	19'-9	13	20'-9	13	21'-6	14	22'-3	14	23'-3
r2	str	2	14'-6	2	15'-6	2	15'-9	2	17'-0	2	18'-0	2	18'-6	2	19'-3	3	19'-6	3	20'-0	3	21'-0
r3	str	2	13'-0	2	13'-9	2	14'-3	2	15'-3	2	16'-3	2	16'-9	2	17'-6	2	17'-9	3	18'-3	3	19'-6
r4	str	2	11'-6	2	12'-3	2	12'-6	2	13'-9	2	14'-9	2	15'-3	2	15'-9	2	16'-3	2	16'-6	3	18'-0
r5	str	2	10'-0	2	10'-6	2	10'-9	2	12'-0	2	13'-0	2	13'-6	2	14'-3	2	14'-6	2	14'-9	2	15'-9
r6	str	2	9'-6	2	9'-0	2	9'-3	2	10'-3	2	11'-6	2	12'-0	2	12'-6	2	13'-0	2	12'-9	2	13'-9
r7	str	2	7'-0	2	7'-3	2	7'-6	2	8'-9	2	9'-9	2	10'-3	2	10'-9	2	11'-3	2	11'-0	2	11'-6
r8	str	2	5'-6	2	5'-9	2	6'-0	2	7'-0	2	8'-3	2	8'-9	2	9'-3	2	9'-9	2	9'-3	2	9'-6
r9	str							1	6'-3	2	6'-6	2	7'-0	2	7'-6	2	8'-0	2	7'-6	2	7'-3
s	str	48	2'-0	51	2'-0	53	2'-0	56	2'-0	59	2'-0	61	2'-0	64	2'-0	67	2'-0	69	2'-0	72	2'-0
t1	str	2	9'-3	2	9'-9	3	10'-3	3	11'-0	3	11'-6	3	12'-0	3	12'-6	3	13'-0	3	13'-9	3	14'-3
t2	str	2	11'-9	2	12'-3	2	12'-9	3	13'-9	3	14'-3	3	15'-0	3	15'-6	3	16'-3	3	17'-0	3	17'-6
t3	str	2	14'-0	2	14'-6	2	15'-3	2	16'-6	3	17'-3	3	18'-0	3	18'-9	3	19'-6	3	20'-3	3	20'-9
t4	str	2	16'-6	2	17'-0	2	17'-9	2	19'-3	2	20'-0	3	21'-0	3	21'-9	3	22'-6	3	23'-9	3	24'-0
t5	str	2	18'-9	2	19'-3	2	20'-3	2	21'-9	2	22'-9	2	24'-0	2	24'-9	3	25'-9	3	27'-0	3	27'-3
t6	str	2	21'-3	2	21'-9	2	23'-0	2	24'-6	2	25'-6	2	27'-0	2	27'-9	2	29'-0	2	30'-3	3	30'-6
t7	str	2	23'-6	2	24'-0	2	25'-6	2	27'-3	2	28'-6	2	30'-0	2	31'-0	2	32'-3	2	33'-9	2	33'-9
t8	str	1	26'-0	1	26'-6	2	28'-0	2	30'-0	2	31'-3	2	33'-0	2	34'-0	2	35'-6	2	37'-0	2	37'-0
t9	str			1	20'-0													1	24'-0	1	25'-0
t10	str	1	29'-3	1	30'-6	1	31'-9	1	33'-0	1	34'-3	1	35'-6	1	36'-9	1	38'-0	1	39'-3	1	40'-6

45° SKEW

Mark	Bend	90" Φ		96" Φ		102" Φ		108" Φ		114" Φ		120" Φ		126" Φ		132" Φ		138" Φ		144" Φ	
		No	Lgth	No	Lgth	No	Lgth	No	Lgth	No	Lgth	No	Lgth	No	Lgth	No	Lgth	No	Lgth	No	Lgth
h	D	25	9'-3	26	9'-3	27	9'-3	29	9'-3	30	9'-3	31	9'-3	32	9'-3	34	9'-3	35	9'-3	36	9'-3
j	str	8	37'-0	8	39'-0	8	41'-0	8	43'-0	8	45'-0	8	47'-0	8	49'-0	8	51'-0	8	53'-0	8	55'-0
k	E	25	7'-0	26	7'-0	27	7'-0	29	7'-0	30	7'-0	31	7'-0	32	7'-0	34	7'-0	35	7'-0	36	7'-0
r1	str	11	12'-6	12	13'-6	13	14'-6	14	15'-3	14	16'-3	15	17'-3	16	18'-3	16	19'-0	17	20'-0	17	21'-0
r2	str	3	11'-6	3	12'-3	3	13'-0	3	13'-9	3	14'-6	3	15'-6	3	16'-3	3	17'-0	3	17'-9	4	18'-6
r3	str	3	10'-0	3	10'-9	3	11'-3	3	12'-3	3	13'-0	3	14'-0	3	14'-6	3	15'-6	3	16'-3	3	16'-9
r4	str	3	8'-9	3	9'-3	3	9'-9	3	10'-9	3	11'-3	3	12'-6	3	13'-0	3	14'-0	3	14'-6	3	15'-3
r5	str	3	7'-3	3	7'-9	3	8'-0	3	9'-3	3	9'-9	3	11'-0	3	11'-3	3	12'-3	3	13'-0	3	13'-6
r6	str	3	5'-9	3	6'-0	3	6'-3	3	7'-6	3	8'-3	3	9'-3	3	9'-9	3	10'-9	3	11'-3	3	12'-0
r7	str	2	4'-6	2	5'-3	3	4'-9	3	6'-0	3	6'-9	3	7'-9	3	8'-3	3	9'-3	3	9'-9	3	10'-3
r8	str							3	4'-6	3	5'-3	2	6'-6	3	6'-6	3	7'-9	3	8'-3	3	8'-9
r9	str									2	4'-0	2	5'-6	3	4'-9	2	6'-6	3	6'-6	3	7'-0
r10	str															2	5'-6	3	5'-0	3	5'-6
s	str	47	2'-0	50	2'-0	53	2'-0	56	2'-0	59	2'-0	62	2'-0	65	2'-0	68	2'-0	71	2'-0	74	2'-0
t1	str	2	12'-0	2	12'-9	2	13'-3	2	14'-0	2	14'-9	2	15'-3	2	16'-0	3	16'-9	3	17'-3	3	18'-0
t2	str	2	16'-3	2	16'-9	2	17'-3	2	17'-9	2	18'-9	2	19'-3	2	19'-9	2	22'-0	3	23'-0	3	23'-0
t3	str	2	20'-6	2	20'-9	2	21'-6	2	21'-9	2	22'-6	2	23'-3	2	23'-6	2	26'-3	2	29'-0	3	28'-0
t4	str	2	24'-9	2	25'-0	2	25'-9	2	25'-6	2	26'-3	2	27'-0	2	27'-3	2	30'-6	2	33'-0	2	33'-0
t5	str	2	29'-0	2	29'-0	2	29'-9	2	29'-3	2	30'-3	2	31'-0	2	30'-9	2	34'-6	2	37'-0	2	38'-0
t6	str	1	33'-0	2	33'-0	2	34'-0	2	33'-3	2	34'-3	2	35'-0	2	34'-6	2	38'-9	2	41'-0	2	43'-0
t7	str			1	34'-0	1	36'-0	2	37'-0	2	38'-0	2	39'-0	2	38'-3	2	43'-0	2	45'-0	2	48'-0
t8	str											1	41'-0	2	42'-0	2	40'-0	2	39'-0	2	30'-0
t9	str	1	28'-0	1	13'-0	1	24'-0	1	24'-0	2	21'-0	2	19'-0	2	21'-0	2	19'-0	2	19'-0	2	16'-0
t10	str	1	36'-0	1	38'-0	1	40'-0	1	42'-0	1	44'-0	1	46'-0	1	48'-0	1	50'-0	1	52'-0	1	54'-0

QUANTITIES

	PIPE DIA.	REINF. LBS.	CONCRETE C.Y.
RIGHT ANGLE	90"	220	3.7
	96"	235	4.3
	102"	265	4.8
	108"	285	5.5
	114"	315	5.9
	120"	370	6.6
	126"	415	7.3
	132"	450	8.1
	138"	515	8.7
	144"	560	9.1
15° SKEW	90"	185	3.9
	96"	215	4.5
	102"	250	4.9
	108"	275	5.5
	114"	320	6.0
	120"	335	6.6
	126"	385	7.4
	132"	445	8.1
	138"	465	8.6
	144"	515	9.3
30° SKEW	90"	230	5.4
	96"	290	6.1
	102"	340	6.5
	108"	375	7.3
	114"	415	7.8
	120"	465	8.5
	126"	495	9.3
	132"	545	10.0
	138"	610	10.7
	144"	660	11.5
45° SKEW	90"	350	7.3
	96"	405	8.1
	102"	440	8.9
	108"	515	9.8
	114"	555	10.6
	120"	615	11.6
	126"	675	12.7
	132"	745	13.7
	138"	815	14.8
	144"	855	15.9

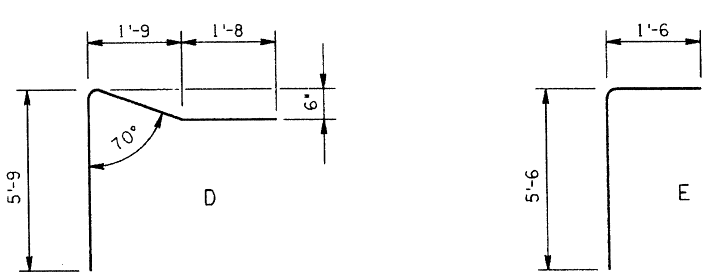

BENDS

NOTE:

All reinforcing bars are #4.

The apron quantities take into consideration the cutoff walls being omitted along outlet headwalls.

		NO	DESCRIPTION OF REVISIONS	MADE BY	DATE
DESIGN	K.W. 4-92	1			
DRAWN	C.H. 4-92	2			
CHECKED	G.K. 4-92	3			
		4			

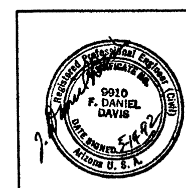

DESIGN APPROVED

APPROVED FOR DISTRIBUTION

ARIZONA
DEPARTMENT OF TRANSPORTATION
HIGHWAYS DIVISION
STANDARD DRAWINGS

OUTLET APRON STEEL LIST
4:1 SLOPE

REVISION 4-92

STANDARD NO. B-17.30

ZF1:[051020]SB1730.DGN;5 VIEW NAME: BR
08-MAY-1992 10:45

Mark	Bend	RIGHT ANGLE																			
		90" Φ		96" Φ		102" Φ		108" Φ		114" Φ		120" Φ		126" Φ		132" Φ		138" Φ		144" Φ	
		No	Lgth	No	Lgth	No	Lgth	No	Lgth	No	Lgth	No	Lgth	No	Lgth	No	Lgth	No	Lgth	No	Lgth
h	D	17	9'-3	18	9'-3	19	9'-3	20	9'-3	21	9'-3	22	9'-3	23	9'-3	24	9'-3	25	9'-3	26	9'-3
j	str	8	26'-6	8	28'-0	8	29'-6	8	31'-0	8	32'-6	8	34'-0	8	35'-6	8	37'-0	8	38'-6	8	40'-0
k	E	17	7'-0	18	7'-0	19	7'-0	20	7'-0	21	7'-0	22	7'-0	23	7'-0	24	7'-0	25	7'-0	26	7'-0
r1	str	9	23'-6	9	24'-9	9	26'-3	9	27'-6	9	29'-0	11	30'-3	11	31'-9	11	33'-0	13	34'-6	13	36'-0
r2	str	4	18'-0	4	20'-0	4	21'-6	4	24'-0	4	25'-6	4	25'-0	4	28'-0	4	29'-6	4	29'-0	4	30'-6
r3	str	4	12'-6	4	15'-0	4	16'-6	4	18'-6	4	20'-6	4	19'-9	4	22'-3	4	24'-3	4	23'-9	4	25'-3
r4	str	4	7'-0	4	10'-0	4	11'-6	4	13'-0	4	15'-6	4	14'-6	4	16'-6	4	19'-0	4	18'-3	4	20'-0
r5	str							2	10'-0	2	12'-0	2	9'-0	4	11'-0	4	14'-0	4	13'-0	4	14'-9
s	str	57	2'-0	60	2'-0	64	2'-0	67	2'-0	70	2'-0	74	2'-0	77	2'-0	80	2'-0	84	2'-0	87	2'-0
t1	str	4	8'-0	4	8'-6	4	8'-9	5	9'-3	5	9'-9	5	10'-3	5	10'-9	5	11'-0	6	11'-6	6	12'-0
t2	str	4	10'-6	4	11'-3	4	11'-6	4	12'-3	5	13'-0	5	13'-6	5	14'-3	5	14'-9	5	15'-3	6	16'-0
t3	str	4	13'-0	4	14'-3	4	14'-6	4	15'-3	4	16'-0	5	17'-0	5	17'-9	5	18'-3	5	19'-3	5	20'-0
t4	str	3	15'-6	4	17'-3	4	17'-3	4	18'-3	4	19'-3	4	20'-3	5	21'-3	5	22'-0	5	23'-0	5	24'-0
t5	str	3	18'-0	4	20'-0	4	20'-0	4	21'-3	4	22'-6	4	23'-6	5	24'-9	5	25'-9	5	26'-9	5	28'-0
t6	str	3	20'-6	3	22'-0	4	23'-0	4	24'-3	4	25'-6	4	27'-0	4	28'-3	5	29'-3	5	30'-9	5	32'-0
t7	str	3	23'-0	3	24'-3	3	25'-9	4	27'-3	4	28'-9	4	30'-3	4	31'-9	4	33'-0	5	34'-6	5	36'-0

Mark	Bend	15° SKEW																			
		90" Φ		96" Φ		102" Φ		108" Φ		114" Φ		120" Φ		126" Φ		132" Φ		138" Φ		144" Φ	
		No	Lgth	No	Lgth	No	Lgth	No	Lgth	No	Lgth	No	Lgth	No	Lgth	No	Lgth	No	Lgth	No	Lgth
h	D	18	9'-3	19	9'-3	20	9'-3	21	9'-3	22	9'-3	23	9'-3	24	9'-3	25	9'-3	26	9'-3	27	9'-3
j	str	8	26'-0	8	27'-6	8	29'-0	8	30'-6	8	32'-0	8	33'-6	8	35'-0	8	36'-6	8	38'-0	8	39'-6
k	E	18	7'-0	19	7'-0	20	7'-0	21	7'-0	22	7'-0	23	7'-0	24	7'-0	25	7'-0	26	7'-0	27	7'-0
r1	str	9	22'-6	9	23'-9	9	25'-3	10	26'-6	10	28'-0	10	29'-3	11	30'-9	12	32'-3	12	33'-6	13	35'-0
r2	str	2	20'-0	2	22'-6	2	23'-6	3	22'-6	3	23'-6	3	26'-0	3	27'-6	3	28'-0	3	29'-0	3	30'-6
r3	str	2	18'-6	2	19'-3	2	20'-6	2	19'-3	2	20'-3	3	21'-0	3	23'-0	3	23'-3	3	24'-6	3	25'-9
r4	str	2	15'-3	2	16'-3	2	17'-6	2	16'-0	2	17'-0	2	18'-0	3	18'-6	3	18'-6	3	20'-0	3	21'-3
r5	str	2	11'-9	2	13'-3	2	14'-6	2	13'-0	2	14'-0	2	15'-0	2	15'-3	3	14'-0	3	15'-6	3	16'-6
r6	str	2	8'-3	2	10'-0	2	11'-6	2	9'-9	2	10'-9	2	12'-0	2	12'-3	2	11'-0	3	11'-0	3	11'-6
r7	str	2	5'-0	2	7'-0	2	8'-6	2	6'-6	2	7'-6	2	9'-0	2	9'-3	2	7'-6	2	8'-0	3	7'-0
r8	str	1	8'-0	1	11'-0	1	16'-0	1	17'-6	2	15'-0	2	17'-0	1	20'-0	1	25'-0	2	19'-0	2	15'-0
s	str	56	2'-0	59	2'-0	62	2'-0	65	2'-0	68	2'-0	71	2'-0	74	2'-0	77	2'-0	80	2'-0	83	2'-0
t1	str	3	8'-0	3	8'-6	3	9'-0	3	9'-6	3	10'-0	4	10'-6	4	11'-0	4	11'-6	4	12'-0	4	12'-6
t2	str	3	10'-6	3	10'-9	3	11'-3	3	11'-6	3	12'-3	3	13'-6	4	14'-0	4	15'-3	4	15'-3	4	15'-3
t3	str	3	12'-9	3	13'-3	3	13'-9	3	13'-6	3	14'-6	3	15'-9	3	17'-0	4	19'-0	4	18'-3	4	18'-3
t4	str	2	15'-6	3	15'-6	3	16'-3	3	15'-6	3	16'-9	3	18'-3	3	19'-6	3	21'-0	4	21'-6	4	21'-3
t5	str	2	17'-0	3	18'-0	3	18'-6	3	17'-6	3	19'-0	3	20'-6	3	21'-9	3	23'-3	3	24'-0	4	24'-0
t6	str	2	18'-6	2	20'-0	3	21'-0	3	19'-6	3	21'-6	3	23'-0	3	24'-3	3	25'-6	3	26'-6	3	27'-6
t7	str	2	20'-0	2	21'-9	2	23'-0	3	21'-6	3	23'-9	3	25'-3	3	26'-9	3	28'-0	3	29'-0	3	30'-0
t8	str	2	21'-6	2	23'-3	2	24'-6	2	25'-6	3	26'-0	3	27'-6	3	29'-0	3	30'-3	3	31'-6	3	32'-6
t9	str	2	23'-0	2	25'-0	2	26'-0	2	27'-0	2	28'-0	3	30'-0	3	31'-6	3	32'-6	3	34'-0	3	35'-0
t10	str	1	17'-6	1	21'-0	1	24'-0	2	18'-0	2	16'-0	2	16'-0	2	18'-0	2	23'-0	2	26'-0	2	24'-0
t11	str	1	25'-0	1	26'-6	1	28'-0	1	29'-6	1	31'-0	1	32'-6	1	34'-0	1	35'-6	1	37'-0	1	38'-6

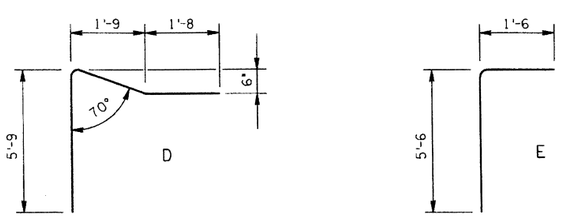

BENDS

Mark	Bend	30° SKEW																			
		90" Φ		96" Φ		102" Φ		108" Φ		114" Φ		120" Φ		126" Φ		132" Φ		138" Φ		144" Φ	
		No	Lgth	No	Lgth	No	Lgth	No	Lgth	No	Lgth	No	Lgth	No	Lgth	No	Lgth	No	Lgth	No	Lgth
h	D	23	9'-3	24	9'-3	25	9'-3	26	9'-3	27	9'-3	28	9'-3	29	9'-3	30	9'-3	31	9'-3	32	9'-3
j	str	8	34'-0	8	35'-6	8	37'-3	8	39'-0	8	40'-9	8	42'-3	8	44'-0	8	45'-9	8	47'-3	8	49'-0
k	E	23	7'-0	24	7'-0	25	7'-0	26	7'-0	27	7'-0	28	7'-0	29	7'-0	30	7'-0	31	7'-0	32	7'-0
r1	str	9	19'-6	10	20'-6	10	21'-6	11	22'-6	11	23'-6	12	24'-6	13	25'-6	13	26'-6	14	27'-6	14	28'-6
r2	str	3	18'-0	3	18'-6	3	19'-6	3	20'-0	3	21'-6	3	22'-0	3	23'-0	4	24'-0	4	24'-6	4	26'-0
r3	str	2	16'-3	3	16'-0	3	18'-3	3	17'-9	3	19'-3	3	19'-6	3	20'-6	3	21'-6	4	21'-0	4	22'-9
r4	str	2	14'-9	2	14'-6	3	17'-0	3	15'-3	3	17'-0	3	17'-3	3	18'-3	3	19'-0	3	18'-6	4	19'-6
r5	str	2	13'-0	2	12'-9	2	15'-0	3	13'-0	3	14'-6	3	14'-9	3	15'-9	3	16'-6	3	16'-0	3	16'-6
r6	str	2	11'-6	2	11'-3	2	12'-9	2	11'-3	3	12'-3	3	12'-6	3	13'-3	3	14'-0	3	13'-6	3	14'-0
r7	str	2	9'-9	2	9'-9	2	10'-9	2	9'-9	3	10'-0	3	10'-0	3	10'-9	3	11'-6	3	11'-0	3	11'-9
r8	str	2	8'-3	2	8'-0	2	8'-6	2	8'-3	2	8'-3	2	8'-3	3	8'-6	3	9'-0	3	8'-6	3	9'-3
r9	str	2	6'-6	2	6'-6	2	6'-6	2	6'-6	2	6'-6	2	6'-6	3	6'-6	3	6'-6	3	6'-0	3	7'-0
s	str	60	2'-0	63	2'-0	65	2'-0	68	2'-0	71	2'-0	73	2'-0	76	2'-0	79	2'-0	81	2'-0	84	2'-0
t1	str	3	9'-3	3	9'-9	3	10'-3	3	11'-0	3	11'-6	3	12'-0	3	12'-0	4	13'-0	4	13'-9	4	14'-3
t2	str	3	12'-9	3	13'-3	3	13'-9	3	14'-6	3	15'-0	3	15'-6	3	16'-0	3	17'-6	4	18'-6	4	19'-0
t3	str	3	16'-6	3	17'-0	3	17'-6	3	18'-0	3	18'-9	3	19'-3	3	19'-9	3	21'-0	3	21'-6	4	23'-9
t4	str	2	20'-0	2	21'-0	3	21'-0	3	21'-6	3	22'-3	3	22'-9	3	23'-3	3	24'-9	3	25'-6	4	28'-6
t5	str	2	22'-6	2	23'-3	2	24'-0	3	25'-0	3	25'-9	3	26'-3	3	26'-9	3	28'-3	3	29'-6	3	33'-0
t6	str	2	25'-0	2	25'-6	2	26'-9	2	28'-0	3	29'-6	3	30'-0	3	30'-3	3	31'-9	3	33'-6	3	36'-9
t7	str	2	27'-6	2	27'-9	2	29'-3	2	30'-6	3	33'-0	3	33'-3	3	34'-0	3	35'-6	3	37'-6	3	40'-3
t8	str	2	30'-0	2	30'-0	2	32'-0	2	33'-0	2	36'-6	2	36'-6	3	37'-6	3	39'-0	3	41'-6	2	44'-0
t9	str			1	25'-0	1	26'-0	1	29'-0			1	27'-0	1	35'-0	1	34'-0	1	37'-0	1	38'-0
t10	str	1	33'-3	1	35'-0	1	35'-9	1	38'-6	1	40'-3	1	42'-0	1	43'-9	1	45'-6	1	47'-3	1	49'-0

Mark	Bend	45° SKEW																			
		90" Φ		96" Φ		102" Φ		108" Φ		114" Φ		120" Φ		126" Φ		132" Φ		138" Φ		144" Φ	
		No	Lgth	No	Lgth	No	Lgth	No	Lgth	No	Lgth	No	Lgth	No	Lgth	No	Lgth	No	Lgth	No	Lgth
h	D	29	9'-3	30	9'-3	32	9'-3	33	9'-3	34	9'-3	36	9'-3	37	9'-3	38	9'-3	40	9'-3	41	9'-3
j	str	8	44'-0	8	46'-0	8	48'-0	8	50'-0	8	52'-0	8	54'-0	8	56'-0	8	58'-0	8	60'-0	8	62'-0
k	E	29	7'-0	30	7'-0	32	7'-0	33	7'-0	34	7'-0	36	7'-0	37	7'-0	38	7'-0	40	7'-0	41	7'-0
r1	str	11	15'-6	12	16'-3	13	17'-3	14	18'-3	14	19'-0	15	20'-0	16	20'-9	16	21'-9	17	22'-6	17	23'-6
r2	str	4	14'-0	4	15'-6	4	16'-6	4	17'-3	4	17'-0	4	18'-0	4	18'-9	4	19'-6	4	20'-3	4	22'-0
r3	str	3	12'-6	3	14'-0	3	15'-0	3	15'-9	3	15'-3	3	16'-6	4	16'-9	4	17'-6	4	18'-3	4	19'-9
r4	str	3	11'-0	3	12'-9	3	13'-3	3	14'-0	3	14'-0	3	15'-0	4	15'-0	4	15'-6	4	16'-0	4	17'-9
r5	str	3	9'-6	3	11'-3	3	11'-9	3	12'-6	3	12'-3	3	13'-6	3	13'-0	4	13'-6	4	14'-0	4	15'-6
r6	str	3	8'-0	3	9'-9	3	10'-3	3	10'-9	3	11'-0	3	12'-0	3	11'-6	3	11'-9	4	12'-0	4	13'-3
r7	str	3	6'-6	3	8'-3	3	8'-9	3	9'-3	3	9'-3	3	10'-6	3	10'-0	3	10'-3	3	10'-6	4	11'-3
r8	str	3	5'-0	3	7'-0	3	7'-0	3	7'-9	3	8'-3	3	9'-0	3	8'-6	3	8'-9	3	9'-0	4	9'-0
r9	str	3	3'-6	3	5'-6	3	5'-6	3	5'-0	3	6'-3	3	7'-6	3	7'-0	3	7'-6	3	7'-6	3	7'-6
r10	str			2	4'-6	2	4'-6	3	4'-6	3	5'-0	3	6'-0	3	5'-6	3	6'-0	3	6'-0	3	6'-6
s	str	58	2'-0	61	2'-0	64	2'-0	67	2'-0	70	2'-0	73	2'-0	76	2'-0	79	2'-0	82	2'-0	85	2'-0
t1	str	2	11'-6	2	12'-3	2	13'-0	2	13'-9	3	14'-6	3	15'-3	3	16'-0	3	16'-9	3	17'-6	3	18'-3
t2	str	2	15'-9	2	16'-3	2	17'-0	2	18'-0	3	20'-6	3	21'-0	3	22'-0	3	23'-0	3	23'-6	3	24'-9
t3	str	2	20'-0	2	20'-6	2	21'-3	2	22'-0	2	26'-6	2	27'-0	3	28'-0	3	29'-0	3	29'-6	3	31'-3
t4	str	2	24'-3	2	24'-6	2	25'-6	2	26'-3	2	30'-6	2	31'-3	2	34'-0	3	35'-3	3	35'-6	3	37'-9
t5	str	2	28'-3	2	28'-9	2	29'-6	2	30'-6	2	34'-3	2	35'-6	2	38'-0	2	41'-6	3	41'-6	3	44'-0
t6	str	2	32'-6	2	32'-9	2	33'-9	2	34'-9	2	38'-3	2	39'-6	2	42'-0	2	45'-0	2	47'-0	3	50'-6
t7	str	2	36'-9	2	36'-9	2	37'-9	2	38'-9	2	42'-0	2	43'-9	2	46'-0	2	48'-6	2	50'-6	2	57'-0
t8	str	1	41'-0	2	41'-0	2	42'-0	2	43'-0	2	46'-0	2	48'-0	2	50'-0	2	52'-0	2	54'-0	2	45'-0
t9	str					1	23'-0	2	33'-0	1	19'-0	2	22'-0	2	28'-0	2	24'-0	2	20'-0	2	20'-0
t10	str	1	42'-0	1	44'-0	1	46'-0	1	48'-0	1	50'-0	1	52'-0	1	54'-0	1	56'-0	1	58'-0	1	60'-0

QUANTITIES

	PIPE DIA.	REINF. LBS.	CONCRETE C.Y.
RIGHT ANGLE	90"	255	4.9
	96"	300	5.7
	102"	335	6.5
	108"	400	7.3
	114"	450	8.1
	120"	500	9.1
	126"	590	10.2
	132"	650	11.3
	138"	735	12.3
	144"	780	13.4
15° SKEW	90"	270	5.2
	96"	320	6.0
	102"	365	6.6
	108"	395	7.5
	114"	450	8.4
	120"	525	9.3
	126"	595	10.4
	132"	660	11.6
	138"	720	12.5
	144"	780	13.6
30° SKEW	90"	385	6.5
	96"	430	8.3
	102"	485	9.0
	108"	530	9.9
	114"	600	10.7
	120"	645	11.7
	126"	720	12.8
	132"	780	13.8
	138"	845	14.8
	144"	925	15.9
45° SKEW	90"	500	9.8
	96"	580	10.7
	102"	640	11.6
	108"	705	12.6
	114"	735	13.6
	120"	815	14.7
	126"	900	16.0
	132"	965	17.2
	138"	1040	18.3
	144"	1140	19.7

NOTE:

All reinforcing bars are #4.

The apron quantities take into consideration the cutoff walls being omitted along outlet headwalls.

DESIGN	K.W.	4-92
DRAWN	J.M.	4-92
CHECKED	G.K.	4-92

NO	DESCRIPTION OF REVISIONS	MADE BY	DATE
1			
2			
3			
4			

DESIGN APPROVED

APPROVED FOR DISTRIBUTION

ARIZONA DEPARTMENT OF TRANSPORTATION HIGHWAYS DIVISION STANDARD DRAWINGS

OUTLET APRON STEEL LIST 6:1 SLOPE

REVISION 4-92

STANDARD NO. B-17.40

ZF1:(0510201581740.DGN)3 VIEW NAME: BR

08-MAY-1992 10:48

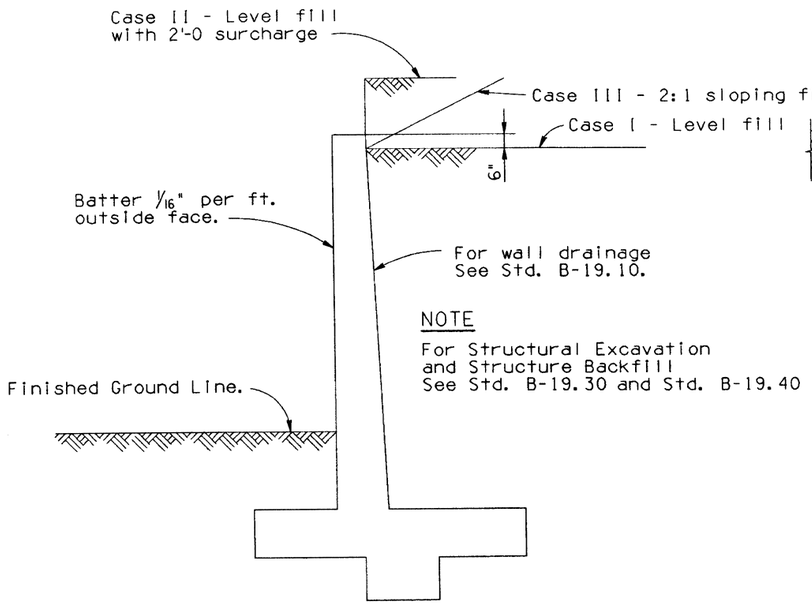

NOTE

For Structural Excavation and Structure Backfill See Std. B-19.30 and Std. B-19.40

TYPICAL SECTION

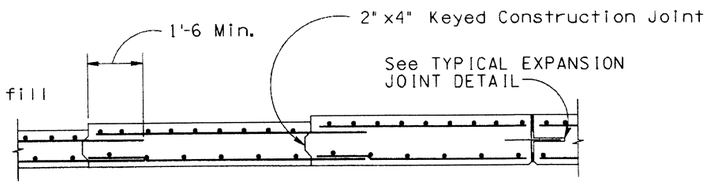

SECTION A-A

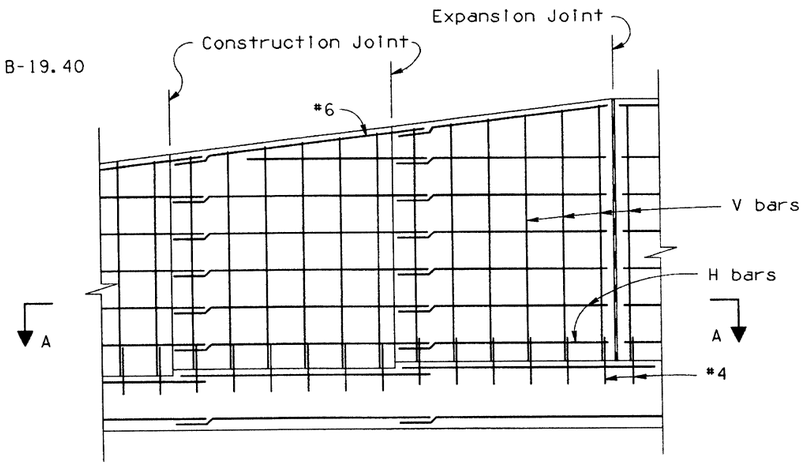

TYPICAL ELEVATION

Outside Face Reinforcing

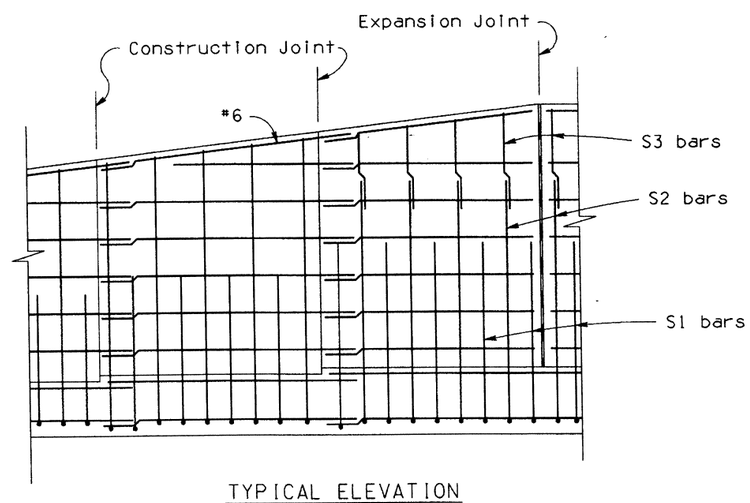

TYPICAL ELEVATION

Inside Face Reinforcing

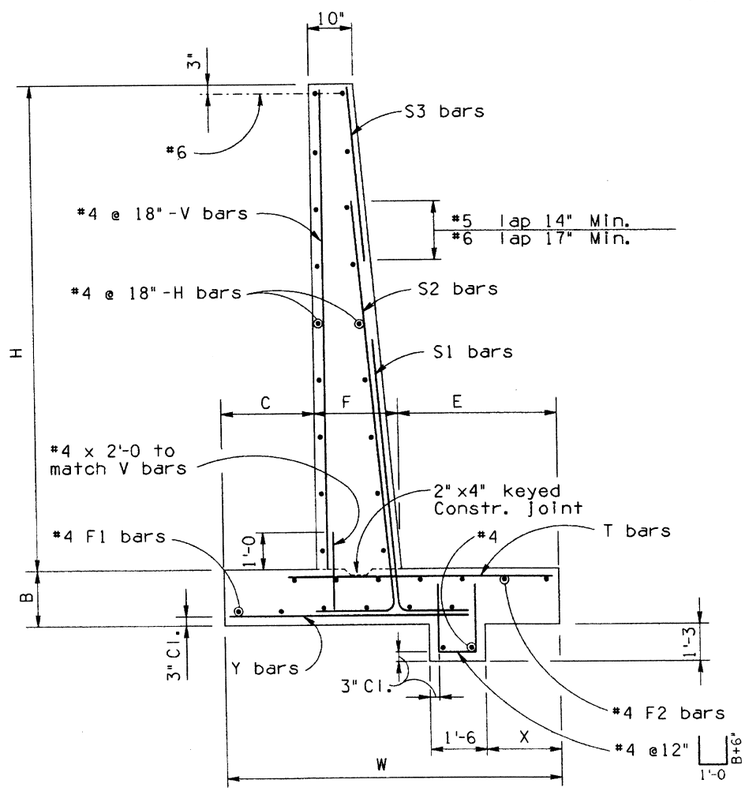

TYPICAL WALL DETAILS

Case I, II & III

GENERAL NOTES:

Construction Specification - Arizona Department of Transportation Standard Specifications for Road and Bridge Construction, latest Edition.

Design Specifications - AASHTO Standard Specifications for Highway Bridges, Edition of 1989 and the 1990 Interim Specifications.

Dead Load - Weight of backfill = 120 p.c.f.
Coeficient of friction = .4
Angle of internal friction -
Backfill 33.25°
Existing ground 30.96°

All concrete shall be Class "S" unless noted otherwise.

Reinforcing steel shall conform to ASTM Specification A615. Bar sizes #6 and smaller shall be designed as Grade 40 but may be furnished as Grade 40 or Grade 60. Bar sizes #7 and larger shall be designed and furnished as Grade 60.

All bend dimensions for reinforcing steel shall be out-to-out of bars. All placement dimensions for reinforcing steel shall be to center of bars unless noted otherwise.

All reinforcing steel shall have 2 inch clear cover unless noted otherwise.

Stresses:
Class 'S' Concrete ..... f'c = 3000 psi
Grade 40 reinforcing steel ..... fs = 20000 psi
Grade 60 reinforcing steel ..... fs = 24000 psi

Chamfer all exposed corners 3/4" as per Standard B-19.10 unless noted otherwise.

Dimensions shall not be scaled from drawings.

JOINT NOTE:

All Retaining Walls shall have Construction Joints spaced at not more than 30'-0 apart or as shown. Reinforcing Steel shall project through the joint.

Expansion Joints shall be provided at intervals not exceeding 90'-0.

Footings may be continuous with no joint.

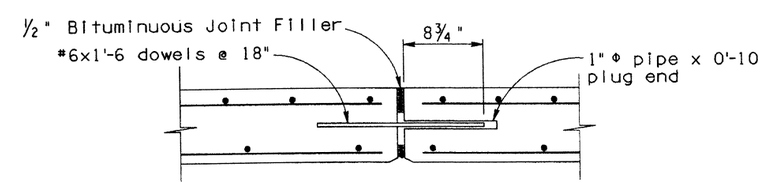

TYPICAL EXPANSION JOINT DETAIL

NOTE:

For Retaining Wall dimensions and quantities see B-18.20 and B-18.30.

Registered Professional Engineer (Civil) 9910 F. DANIEL DAVIS Arizona U.S.A.	DESIGN APPROVED	ARIZONA DEPARTMENT OF TRANSPORTATION HIGHWAYS DIVISION STANDARD DRAWINGS	REVISION 4-92
	APPROVED FOR DISTRIBUTION	CANTILEVER RETAINING WALL DETAILS	STANDARD NO. B-18.10

DESIGN	K.W.	4-92	NO	DESCRIPTION OF REVISIONS	MADE BY	DATE
DRAWN	J.M.	4-92	1			
CHECKED	L.C.	4-92	2			
			3			
			4			

ZF1:[051020]SB1810.DGN;1 VIEW NAME:
08-MAY-1992 15:04

CASE I - LEVEL FILL

Dimensions							Steel List																			Max. Toe Press. Lbs./Sq.Ft.
							S1			S2			S3			H	V	Y			F1	T				F2	
H	W	B	C	F	E	X	Bar Size	Spacing	Length	Bar Size	Spacing	Length	Bar Size	Spacing	Length	Number ◆	Length	Bar Size	Spacing	Length	Number ◆	Bar Size	Spacing	Length	Number ◆	
4'	3'-0	1'-0	10"	10"	1'-4	8"	5	12"	5'-6							4	3'-9	5	12"	2'-3	2	5	12"	2'-3	3	750
5'	3'-6	1'-0	1'-0	10"	1'-8	9"	5	12"	6'-6							6	4'-9	5	12"	2'-9	2	5	12"	2'-9	3	890
6'	4'-0	1'-0	1'-2	10"	2'-0	10"	5	12"	7'-6							6	5'-9	5	12"	3'-3	2	5	12"	3'-0	3	1030
7'	4'-6	1'-0	1'-4	10"	2'-4	11"	5	12"	8'-6							8	6'-9	5	12"	3'-6	3	5	12"	3'-3	3	1170
8'	5'-0	1'-2	1'-6	10"	2'-8	1'-0	5	12"	9'-9							10	7'-9	5	12"	4'-0	3	5	12"	3'-9	3	1390
9'	5'-6	1'-2	1'-9	1'-0	2'-9	1'-2	5	12"	10'-9							10	8'-9	5	12"	4'-3	3	5	12"	3'-9	3	1500
10'	6'-0	1'-2	1'-9	1'-0	3'-3	1'-4	6	12"	11'-9							12	9'-9	5	12"	4'-9	3	5	12"	4'-3	4	1720
11'	6'-6	1'-2	2'-0	1'-0	3'-6	1'-6	5	12"	4'-3	5	12"	12'-9				14	10'-9	5	12"	5'-0	4	5	12"	4'-6	4	1820
12'	7'-0	1'-3	2'-0	1'-0	4'-0	1'-8	6	12"	5'-3	5	12"	13'-9				14	11'-9	5	12"	5'-3	4	6	12"	5'-3	5	2090
13'	7'-6	1'-3	2'-3	1'-0	4'-3	1'-10	7	12"	6'-6	5	12"	14'-9				16	12'-9	5	12"	5'-9	4	6	9"	5'-6	5	2190
14'	8'-0	1'-3	2'-3	1'-2	4'-7	2'-0	7	12"	7'-0	5	12"	15'-9				18	13'-9	5	12"	6'-0	4	7	12"	7'-0	5	2420
15'	8'-6	1'-3	2'-6	1'-3	4'-9	2'-2	7	12"	8'-0	5	12"	16'-9				18	14'-9	6	12"	6'-3	5	7	12"	7'-3	5	2520
16'	9'-0	1'-4	2'-6	1'-4	5'-2	2'-4	7	12"	7'-3	6	12"	8'-9	5	12"	10'-9	20	15'-9	6	12"	6'-9	5	8	12"	8'-6	6	2800
17'	9'-6	1'-4	2'-9	1'-5	5'-4	2'-6	7	12"	6'-0	7	12"	9'-9	5	12"	10'-9	22	16'-9	6	9"	7'-0	5	8	12"	8'-6	6	2900
18'	10'-0	1'-5	2'-9	1'-6	5'-9	2'-8	7	12"	7'-0	7	12"	10'-6	5	12"	11'-0	22	17'-9	6	9"	7'-3	5	7	8"	8'-3	6	3180
19'	10'-6	1'-6	3'-0	1'-7	5'-11	2'-10	8	12"	8'-0	7	12"	10'-3	6	12"	12'-9	24	18'-9	6	9"	7'-9	6	8	9"	9'-3	7	3320
20'	11'-0	1'-6	3'-0	1'-8	6'-4	3'-0	8	12"	7'-6	8	12"	11'-6	6	12"	12'-9	26	19'-9	6	8"	8'-0	6	8	8"	9'-6	7	3560
21'	11'-6	1'-7	3'-3	1'-9	6'-6	3'-2	8	12"	8'-3	8	12"	12'-6	6	12"	12'-9	26	20'-9	7	12"	8'-3	6	9	9"	10'-6	7	3700
22'	12'-0	1'-8	3'-3	1'-10	6'-11	3'-4	9	12"	9'-6	8	12"	13'-6	6	12"	13'-0	28	21'-9	7	12"	8'-9	6	9	9"	11'-0	7	3980
23'	12'-6	1'-9	3'-6	2'-0	7'-0	3'-6	10	12"	12'-3	7	12"	14'-0	6	12"	13'-3	30	22'-9	8	12"	9'-0	6	8	6"	10'-3	7	4130
24'	13'-0	1'-10	3'-6	2'-2	7'-4	3'-8	9	12"	9'-3	9	12"	15'-6	6	12"	13'-3	30	23'-9	8	12"	9'-3	7	8	6"	10'-6	8	4420
25'	13'-6	2'-0	3'-9	2'-4	7'-5	3'-10	9	12"	10'-3	9	12"	16'-6	6	12"	13'-6	32	24'-9	8	12"	9'-9	7	8	6"	10'-9	8	4610
26'	14'-0	2'-3	3'-9	2'-6	7'-9	4'-0	10	12"	13'-0	8	12"	17'-6	6	12"	13'-9	34	25'-9	8	12"	10'-0	7	8	6"	11'-0	8	5000
27'	14'-6	2'-6	4'-0	2'-8	7'-10	4'-2	10	12"	12'-3	9	12"	18'-6	6	12"	14'-3	34	26'-9	8	12"	10'-3	7	8	6"	11'-0	8	5240
28'	15'-0	2'-9	4'-0	2'-10	8'-2	4'-4	10	12"	13'-3	9	12"	19'-9	6	12"	14'-3	36	27'-9	8	12"	10'-9	7	8	6"	11'-6	8	5630
29'	15'-6	3'-0	4'-3	3'-0	8'-3	4'-6	10	12"	12'-0	10	12"	21'-0	6	12"	14'-3	38	28'-9	8	12"	11'-0	7	8	6"	11'-6	9	5880
30'	16'-0	3'-3	4'-3	3'-2	8'-7	4'-8	10	12"	13'-0	10	12"	22'-3	6	12"	14'-3	38	29'-9	8	12"	11'-3	8	8	6"	11'-9	9	6280

◆ Total number of bars in cross section.

CASE II-LEVEL FILL WITH 2' SURCHARGE

Dimensions							Steel List																			Max. Toe Press. Lbs./Sq.Ft.
							S1			S2			S3			H	V	Y			F1	T				F2	
H	W	B	C	F	E	X	Bar Size	Spacing	Length	Bar Size	Spacing	Length	Bar Size	Spacing	Length	Number ◆	Length	Bar Size	Spacing	Length	Number ◆	Bar Size	Spacing	Length	Number ◆	
4'	3'-6	1'-0	1'-0	10"	1'-8	1'-0	5	12"	5'-6							4	3'-9	5	12"	2'-6	2	5	12"	2'-6	3	1030
5'	4'-0	1'-0	1'-2	10"	2'-0	1'-0	5	12"	6'-6							6	4'-9	5	12"	3'-0	2	5	12"	2'-9	3	1200
6'	4'-6	1'-0	1'-4	10"	2'-4	1'-2	5	12"	7'-6							6	5'-9	5	12"	3'-3	3	5	12"	3'-3	3	1370
7'	5'-1	1'-2	1'-6	10"	2'-9	1'-4	6	12"	8'-9							8	6'-9	5	12"	3'-9	3	5	12"	3'-6	3	1590
8'	5'-8	1'-2	1'-8	10"	3'-2	1'-6	6	9"	9'-9							10	7'-9	5	12"	4'-3	3	5	12"	4'-0	3	1710
9'	6'-3	1'-2	1'-10	1'-0	3'-5	1'-8	6	9"	10'-9							10	8'-9	5	12"	4'-6	3	5	12"	4'-6	4	1840
10'	6'-10	1'-3	2'-0	1'-0	3'-10	1'-9	7	12"	12'-0							12	10'-9	5	12"	5'-0	4	6	12"	5'-0	4	2100
11'	7'-6	1'-3	2'-3	1'-0	4'-3	1'-10	6	12"	4'-9	6	12"	12'-9				14	11'-9	5	12"	5'-9	4	7	12"	5'-6	5	2060
12'	8'-0	1'-3	2'-6	1'-2	4'-7	2'-0	6	12"	5'-0	6	12"	13'-9				14	12'-9	5	12"	6'-0	4	7	12"	6'-9	5	2290
13'	8'-6	1'-3	2'-6	1'-3	4'-9	2'-2	7	12"	7'-6	5	12"	14'-9				16	13'-9	6	12"	6'-0	4	7	12"	7'-0	5	2400
14'	9'-0	1'-3	2'-6	1'-4	5'-2	2'-4	7	12"	7'-3	6	12"	15'-9				18	14'-9	6	12"	6'-9	5	8	12"	8'-3	6	2630
15'	9'-6	1'-4	2'-9	1'-5	5'-4	2'-6	8	12"	8'-9	6	12"	17'-0				18	15'-9	6	9"	7'-0	5	8	12"	8'-3	6	2780
16'	10'-0	1'-5	2'-9	1'-6	5'-9	2'-8	7	12"	7'-0	7	12"	9'-0	6	12"	10'-9	20	16'-9	6	8"	7'-3	5	7	8"	8'-0	6	3050
17'	10'-6	1'-6	3'-0	1'-7	5'-11	2'-10	8	12"	8'-0	7	12"	9'-0	6	12"	10'-9	22	17'-9	6	8"	7'-9	5	7	8"	8'-3	6	3210
18'	11'-0	1'-7	3'-0	1'-8	6'-4	3'-0	7	10"	7'-6	7	10"	10'-0	6	10"	11'-9	22	18'-9	7	12"	8'-0	6	9	10"	10'-0	7	3480
19'	11'-6	1'-8	3'-3	1'-9	6'-6	3'-2	8	12"	8'-0	8	12"	12'-6	6	12"	10'-9	24	19'-9	7	12"	8'-3	6	8	8"	9'-6	7	3640
20'	12'-0	1'-9	3'-3	1'-10	6'-11	3'-4	9	12"	9'-6	8	12"	13'-3	6	12"	11'-0	26	20'-9	7	12"	8'-9	6	9	9"	10'-9	7	3920
21'	12'-6	1'-10	3'-6	1'-11	7'-1	3'-6	8	10"	9'-0	8	10"	14'-3	6	10"	11'-3	26	21'-9	7	10"	9'-0	6	10	10"	11'-9	7	4300
22'	13'-0	1'-11	3'-6	2'-0	7'-6	3'-8	9	12"	10'-0	9	12"	15'-9	6	12"	11'-0	28	22'-9	8	12"	9'-3	6	8	6"	10'-6	7	4350
23'	13'-6	2'-0	3'-9	2'-2	7'-7	3'-10	10	12"	12'-9	8	12"	16'-3	6	12"	11'-3	30	23'-9	8	12"	9'-9	7	8	6"	10'-6	7	4510
24'	14'-0	2'-2	3'-9	2'-4	7'-11	4'-0	10	12"	11'-6	9	12"	17'-9	6	12"	11'-3	30	24'-9	8	12"	10'-0	7	8	6"	11'-0	8	4840
25'	14'-6	2'-4	4'-0	2'-6	8'-0	4'-2	10	12"	12'-6	9	12"	19'-0	6	12"	11'-3	32	25'-9	8	12"	10'-3	7	8	6"	11'-0	8	5040
26'	15'-0	2'-6	4'-0	2'-8	8'-4	4'-4	9	10"	11'-6	9	10"	18'-6	6	10"	13'-0	34	26'-9	8	12"	10'-9	7	10	9"	13'-0	9	5380
27'	15'-6	2'-9	4'-3	2'-10	8'-5	4'-6	10	12"	12'-3	10	12"	21'-3	6	12"	11'-9	34	27'-9	8	12"	11'-0	8	10	9"	13'-3	9	5630
28'	16'-0	3'-0	4'-3	3'-0	8'-9	4'-8	10	12"	13'-3	10	12"	22'-0	6	12"	12'-3	36	28'-9	8	12"	11'-3	8	10	9"	13'-6	9	6020
29'	16'-6	3'-3	4'-6	3'-3	8'-9	4'-10	11	12"	16'-3	9	12"	23'-0	6	12"	12'-3	38	29'-9	8	12"	11'-9	8	10	9"	13'-6	9	6120
30'	17'-0	3'-6	4'-6	3'-6	9'-0	5'-0	11	12"	15'-9	10	12"	24'-0	6	12"	12'-9	38	30'-9	8	12"	12'-0	8	10	9"	13'-9	10	6670

S1 Bar

S2 Bar

Bar Size	Dim. A
5	1'-0
6	1'-0
7	1'-2
8	1'-4
9	1'-8
10	1'-10
11	2'-0

NOTE:

For General Notes, Typical Elevations and Joint details see B-18.10.
For Quantities see B-18.30.

DESIGN	K. M.	4-92	NO	DESCRIPTION OF REVISIONS	MADE BY	DATE
DRAWN	C. H.	4-92	1			
CHECKED	L. C.	4-92				

ZF1:C0510201SB1820.DGN;1 VIEW NAME: BR
08-MAY-1992 15:05

DESIGN APPROVED	ARIZONA DEPARTMENT OF TRANSPORTATION HIGHWAYS DIVISION STANDARD DRAWINGS	REVISION 4-92
APPROVED FOR DISTRIBUTION	CANTILEVER RETAINING WALLS ON SPREAD FOOTING	STANDARD NO. B-18.20

CASE III - 2:1 SLOPING FILL

Dimensions							Steel List																				Max. Toe Press. Lbs./Sq.Ft.
							S1			S2			S3			H	V	Y			F1	T			F2	
H	W	B	C	F	E	X	Bar Size	Spacing	Length	Bar Size	Spacing	Length	Bar Size	Spacing	Length	Number ◆	Length	Bar Size	Spacing	Length	Number ◆	Bar Size	Spacing	Length	Number ◆	
4'	3'-0	1'-0	1'-0	10"	1'-2	1'-0	5	12"	5'-6							4	3'-9	5	12"	2'-0	2	5	12"	2'-3	3	660
5'	3'-6	1'-0	1'-0	10"	1'-8	1'-0	5	12"	6'-6							6	4'-9	5	12"	2'-6	2	5	12"	2'-9	3	1010
6'	4'-2	1'-0	1'-0	10"	2'-4	1'-0	5	12"	7'-6							6	5'-9	5	12"	3'-3	2	5	12"	3'-3	3	1210
7'	5'-0	1'-2	1'-2	10"	3'-0	1'-3	5	12"	8'-9							8	6'-9	5	12"	3'-9	3	5	12"	4'-0	4	1440
8'	5'-9	1'-2	1'-4	10"	3'-7	1'-6	6	12"	9'-9							10	7'-9	5	12"	4'-3	3	6	12"	4'-9	4	1590
9'	6'-6	1'-3	1'-6	1'-0	4'-0	1'-9	6	12"	10'-9							10	8'-9	5	12"	4'-9	3	6	9"	5'-3	5	1800
10'	7'-3	1'-3	1'-8	1'-0	4'-7	2'-0	7	12"	12'-0							12	9'-9	5	12"	5'-3	4	7	12"	7'-0	5	1920
11'	8'-3	1'-4	1'-10	1'-2	5'-3	2'-3	7	12"	13'-0							14	10'-9	5	12"	6'-0	4	8	12"	8'-6	6	2130
12'	9'-0	1'-4	2'-0	1'-2	5'-10	2'-6	7	12"	14'-0							14	11'-9	5	12"	6'-6	4	8	12"	9'-0	7	2230
13'	9'-9	1'-6	2'-2	1'-4	6'-3	2'-9	6	12"	6'-3	6	12"	15'-0				16	12'-9	5	12"	7'-0	5	8	9"	9'-6	8	2470
14'	10'-6	1'-8	2'-4	1'-4	6'-10	3'-0	7	12"	8'-6	6	12"	16'-3				18	13'-9	5	12"	7'-6	5	7	6"	9'-3	8	2700
15'	11'-3	1'-10	2'-6	1'-4	7'-5	3'-2	7	14"	6'-6	7	14"	17'-6				18	14'-9	6	14"	8'-0	5	8	7"	10'-9	9	2940
16'	12'-0	2'-0	2'-8	1'-6	7'-10	3'-4	7	12"	6'-9	7	12"	10'-3	5	12"	10'-0	20	15'-9	5	12"	8'-6	6	8	6"	11'-0	9	3180
17'	12'-6	2'-2	2'-8	1'-6	8'-4	3'-6	8	14"	7'-9	8	14"	11'-0	6	14"	11'-0	22	16'-9	6	14"	9'-0	6	9	7"	12'-3	9	3580
18'	13'-0	2'-4	2'-10	1'-6	8'-8	3'-8	8	12"	8'-3	8	12"	11'-6	6	12"	11'-6	22	17'-9	6	12"	9'-3	6	9	6"	12'-9	10	3870
19'	13'-6	2'-6	2'-10	1'-8	9'-0	3'-10	9	14"	8'-9	9	14"	13'-6	6	14"	11'-0	24	18'-9	6	12"	9'-9	7	9	6"	13'-0	10	4300
20'	14'-0	2'-8	3'-0	1'-10	9'-2	4'-0	9	14"	9'-6	9	14"	14'-3	6	14"	11'-3	26	19'-9	6	12"	10'-0	7	10	7"	14'-6	11	4610
21'	14'-6	2'-10	3'-2	2'-0	9'-4	4'-2	9	12"	9'-6	9	12"	14'-9	6	12"	12'-0	26	20'-9	6	12"	10'-3	7	10	6"	14'-6	11	4930
22'	15'-0	3'-0	3'-2	2'-2	9'-8	4'-4	9	12"	10'-3	9	12"	15'-9	6	12"	12'-3	28	21'-9	7	12"	10'-9	8	10	6"	15'-0	11	5370
23'	15'-8	3'-4	3'-4	2'-4	10'-0	4'-6	9	12"	11'-3	9	12"	16'-9	6	12"	12'-6	30	22'-9	7	12"	11'-3	8	10	6"	15'-3	12	5750
24'	16'-4	3'-8	3'-6	2'-6	10'-4	4'-8	10	14"	11'-9	10	14"	19'-0	6	14"	12'-0	30	23'-9	7	14"	11'-9	8	11	7"	16'-9	12	6130
25'	17'-0	4'-0	3'-8	2'-9	10'-7	4'-10	10	12"	13'-0	9	12"	19'-3	6	12"	12'-9	32	24'-9	7	12"	12'-3	8	11	6"	17'-0	12	6500
26'	17'-6	4'-4	3'-10	3'-0	10'-8	5'-0	10	12"	13'-9	9	12"	20'-3	6	12"	13'-0	34	25'-9	7	12"	12'-6	9	11	6"	17'-3	13	6950
27'	18'-0	4'-8	4'-0	3'-3	10'-9	5'-2	10	12"	15'-0	9	12"	21'-3	6	12"	13'-3	34	26'-9	7	12"	12'-9	9	11	6"	17'-3	13	7400
28'	18'-8	5'-0	4'-3	3'-6	10'-11	5'-4	10	12"	13'-9	10	12"	22'-9	6	12"	13'-6	36	27'-9	7	12"	13'-3	9	11	6"	17'-6	13	7720
29'	19'-4	5'-4	4'-6	3'-9	11'-1	5'-6	10	12"	14'-9	10	12"	24'-0	6	12"	13'-9	38	28'-9	7	12"	13'-9	10	11	6"	17'-6	13	8050
30'	20'-0	5'-8	4'-9	4'-0	11'-3	5'-8	10	12"	15'-9	10	12"	25'-3	6	12"	13'-9	38	29'-9	7	12"	14'-3	10	11	6"	17'-9	13	8370

◆ Total number of bars in cross section.

QUANTITIES

H	CASE I		CASE II		CASE III	
	Concrete C.Y./Ln.Ft.	Steel Lbs./Ln.Ft.	Concrete C.Y./Ln.Ft.	Steel Lbs./Ln.Ft.	Concrete C.Y./Ln.Ft.	Steel Lbs./Ln.Ft.
4'	.304	25	.323	25	.304	25
5'	.353	30	.372	30	.353	30
6'	.403	30	.421	35	.409	35
7'	.452	35	.505	40	.502	40
8'	.532	40	.561	50	.565	50
9'	.613	45	.645	55	.676	55
10'	.668	50	.725	65	.745	70
11'	.724	55	.790	70	.884	85
12'	.801	65	.884	75	.958	90
13'	.858	75	.964	85	1.133	105
14'	.958	85	1.048	105	1.279	125
15'	1.042	90	1.163	120	1.435	140
16'	1.156	110	1.285	125	1.650	155
17'	1.247	120	1.413	135	1.807	180
18'	1.372	130	1.548	160	1.971	215
19'	1.503	150	1.688	170	2.199	230
20'	1.607	170	1.835	195	2.440	255
21'	1.748	185	1.988	220	2.693	290
22'	1.897	200	2.147	230	2.958	310
23'	2.086	230	2.347	245	3.352	325
24'	2.285	235	2.600	265	3.769	360
25'	2.535	245	2.866	275	4.247	405
26'	2.841	265	3.125	305	4.724	420
27'	3.162	280	3.481	325	5.222	430
28'	3.498	295	3.835	335	5.773	455
29'	3.850	315	4.248	360	6.349	470
30'	4.218	330	4.681	380	6.952	485

NOTE:
Quantities are for one L.F. of wall.
Steel quantities for horizontal splices shall be added to those shown in table.

S1 Bar

S2 Bar

Bar Size	Dim. A
5	1'-0
6	1'-0
7	1'-2
8	1'-4
9	1'-8
10	1'-10

NOTE:
For General Notes, Typical Elevations and Joint details see B-18.10.

DESIGN	K. W.	4-92
DRAWN	C. H.	4-92
CHECKED	L. C.	4-92

NO	DESCRIPTION OF REVISIONS	MADE BY	DATE
1			
2			
3			
4			

DESIGN APPROVED
F. Daniel Davis

APPROVED FOR DISTRIBUTION
Eugene Wright

ARIZONA
DEPARTMENT OF TRANSPORTATION
HIGHWAYS DIVISION
STANDARD DRAWINGS

CANTILEVER
RETAINING WALLS
ON SPREAD FOOTING

REVISION 4-92

STANDARD NO. B-18.30

ZF1:(05102030S81030.DGN:1 VIEW NAME: BR
08-MAY-1992 15:07

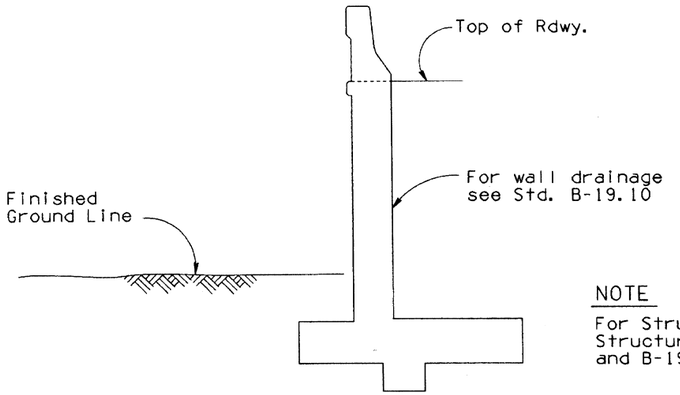

NOTE

For Structural Excavation and Structure Backfill see Std. B-19.30 and B-19.40.

TYPICAL SECTION

Dimensions							Steel List																			Quantities		Max. Toe Press. Lbs./Sq.Ft.
							S1			S2			S3			H	V	B			F1	T			F2			
H	W	B	C	F	E	X	Bar Size	Spacing	Length	Bar Size	Spacing	Length	Bar Size	Spacing	Length	Number ✦	Length	Bar Size	Spacing	Length	Number ✦	Bar Size	Spacing	Length	Number ✦	Concrete C.Y./Ln.Ft.	Steel Lbs./Ln.Ft.	
4'	6'-3	1'-0	2'-0	1'-5	2'-10	1'-4	5	9"	5'-6							4	5'-0	5	12"	3'-6	4	5	12"	4'-3	4	.514	38	1450
5'	6'-3	1'-0	2'-0	1'-5	2'-10	1'-4	5	9"	6'-6							6	6'-0	5	12"	3'-6	4	5	12"	4'-3	4	.566	40	1520
6'	6'-3	1'-0	2'-0	1'-5	2'-10	1'-4	5	9"	7'-6							6	7'-0	5	12"	3'-6	4	5	12"	4'-3	4	.619	40	1640
7'	6'-3	1'-3	2'-0	1'-5	2'-10	1'-4	5	9"	8'-9							8	8'-0	5	12"	3'-6	4	5	12"	4'-3	4	.729	45	1740
8'	6'-3	1'-3	2'-0	1'-5	2'-10	1'-4	6	12"	9'-9							10	9'-0	5	12"	3'-6	4	5	12"	4'-3	4	.782	50	2110
9'	6'-6	1'-3	2'-0	1'-5	3'-1	1'-6	5	12"	6'-6	5	12"	10'-9				10	10'-0	5	12"	3'-6	4	5	12"	4'-6	4	.846	55	2210
10'	6'-6	1'-3	2'-0	1'-5	3'-1	1'-6	5	12"	7'-6	5	12"	11'-9				12	11'-0	5	12"	3'-6	4	5	12"	4'-6	5	.898	60	2540
11'	7'-3	1'-3	2'-3	1'-5	3'-7	1'-9	5	12"	8'-6	5	12"	12'-9				14	12'-0	5	12"	3'-9	4	6	12"	5'-0	5	.985	65	2504
12'	8'-0	1'-3	2'-3	1'-5	4'-4	2'-0	6	12"	9'-6	5	12"	13'-9				14	13'-0	5	12"	3'-9	4	6	9"	5'-9	5	1.073	75	2410
13'	8'-6	1'-3	2'-6	1'-5	4'-7	2'-2	6	12"	7'-0	6	12"	10'-6	5	12"	5'-6	16	14'-0	6	12"	4'-0	4	7	12"	6'-9	5	1.148	85	2510
14'	9'-0	1'-3	2'-6	1'-5	5'-1	2'-4	7	12"	8'-3	6	12"	10'-6	5	12"	5'-6	18	15'-0	6	12"	4'-0	4	8	12"	8'-3	6	1.224	105	2740
15'	9'-6	1'-4	2'-9	1'-5	5'-4	2'-6	7	12"	5'-6	7	12"	12'-9	5	12"	5'-6	18	16'-0	6	12"	4'-6	4	8	12"	8'-3	6	1.329	110	2880
16'	10'-0	1'-5	2'-9	1'-6	5'-9	2'-8	7	12"	5'-6	7	12"	13'-9	5	12"	5'-6	20	17'-0	6	8"	4'-9	4	7	8"	8'-3	6	1.438	120	3160
17'	10'-6	1'-6	3'-0	1'-7	5'-11	2'-10	8	12"	7'-9	7	12"	15'-0	5	12"	5'-6	22	18'-0	7	12"	5'-0	5	9	12"	9'-9	7	1.554	145	3300
18'	11'-0	1'-7	3'-0	1'-8	6'-4	3'-0	8	12"	8'-0	8	12"	13'-0	6	12"	9'-3	22	19'-0	6	9"	5'-6	5	8	9"	9'-3	7	1.676	160	3580
19'	11'-6	1'-8	3'-3	1'-9	6'-6	3'-2	8	12"	10'-3	8	12"	13'-9	6	12"	9'-3	24	20'-0	7	12"	5'-9	5	7	6"	8'-9	7	1.804	170	3730
20'	12'-0	1'-9	3'-3	1'-10	6'-11	3'-4	9	12"	10'-6	8	12"	15'-0	6	12"	9'-3	26	21'-0	7	12"	6'-0	5	9	9"	10'-9	7	1.938	200	4000
21'	12'-6	1'-10	3'-6	1'-11	7'-1	3'-6	9	12"	10'-0	9	12"	16'-6	6	12"	9'-3	26	22'-0	7	9"	6'-3	5	9	9"	11'-0	8	2.079	220	4150
22'	13'-0	1'-11	3'-6	2'-0	7'-6	3'-8	9	12"	11'-0	9	12"	17'-6	6	12"	9'-3	28	23'-0	7	9"	6'-6	5	8	6"	10'-6	8	2.225	235	4430
23'	13'-6	2'-0	3'-9	2'-2	7'-7	3'-10	10	12"	12'-6	9	12"	19'-0	6	12"	9'-3	30	24'-0	8	12"	7'-0	5	8	6"	10'-6	8	2.390	260	4600
24'	14'-0	2'-2	3'-9	2'-4	7'-11	4'-0	10	12"	13'-6	9	12"	20'-0	6	12"	9'-3	30	25'-0	8	12"	7'-3	6	8	6"	10'-9	8	2.608	270	4920
25'	14'-6	2'-4	4'-0	2'-6	8'-0	4'-2	10	12"	14'-6	9	12"	21'-0	6	12"	9'-3	32	26'-0	8	12"	7'-6	6	8	6"	11'-0	9	2.838	285	5110
26'	15'-0	2'-6	4'-0	2'-8	8'-4	4'-4	10	12"	14'-6	10	12"	22'-6	6	12"	9'-3	34	27'-0	7	9"	7'-9	6	10	9"	13'-3	9	3.080	330	5470

✦ Total number of bars in cross section.

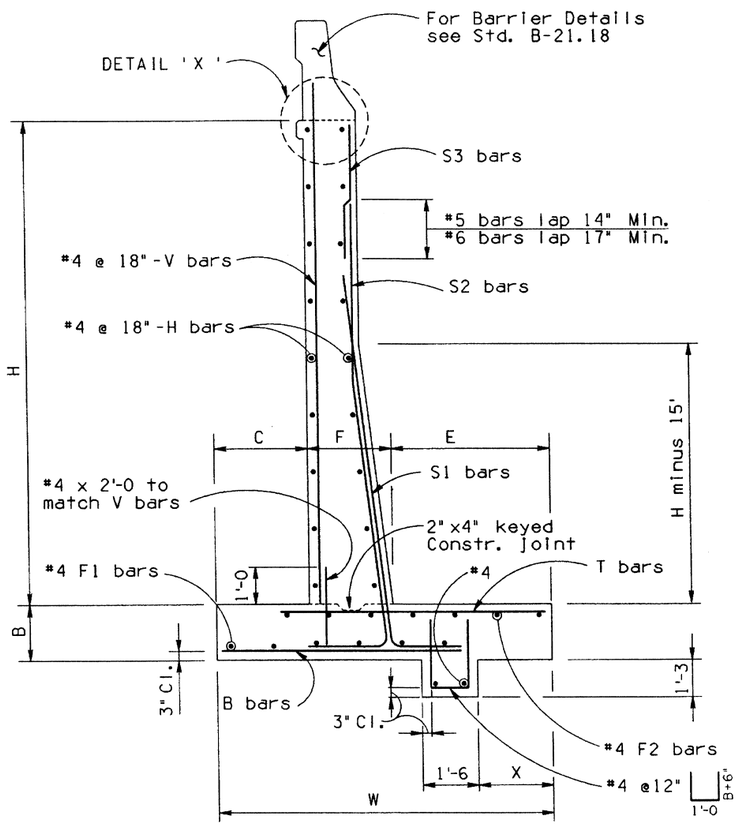

TYPICAL WALL DETAILS

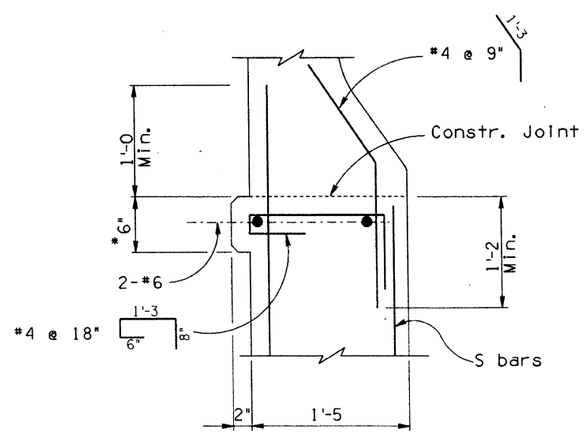

DETAIL 'X'

* When wall is built in conjunction with a bridge dimension to match deck slab depth.

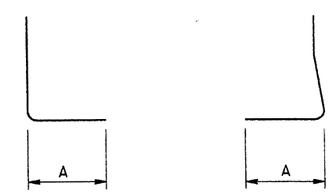

S1 Bar S2 Bar

Bar Size	Dim. A
5	1'-0
6	1'-0
7	1'-2
8	1'-4
9	1'-8
10	1'-10

NOTES

For General Notes, Typical Elevations and Joint Details see B-18.10.

Barrier Quantities not included in total quantities.

Barriers shall not be slip formed.

DESIGN	K.W.	4-92
DRAWN	J.M.	4-92
CHECKED	L.C.	4-92

NO	DESCRIPTION OF REVISIONS	MADE BY	DATE
1			
2			
3			
4			

DESIGN APPROVED

APPROVED FOR DISTRIBUTION

ARIZONA DEPARTMENT OF TRANSPORTATION HIGHWAYS DIVISION STANDARD DRAWINGS

CANTILEVER RETAINING WALLS WITH BARRIER

REVISION 4-92

STANDARD NO. B-18.40

ZF1(0510203SB1840.DGN)1 VIEW NAME:
08-MAY-1992 15:09

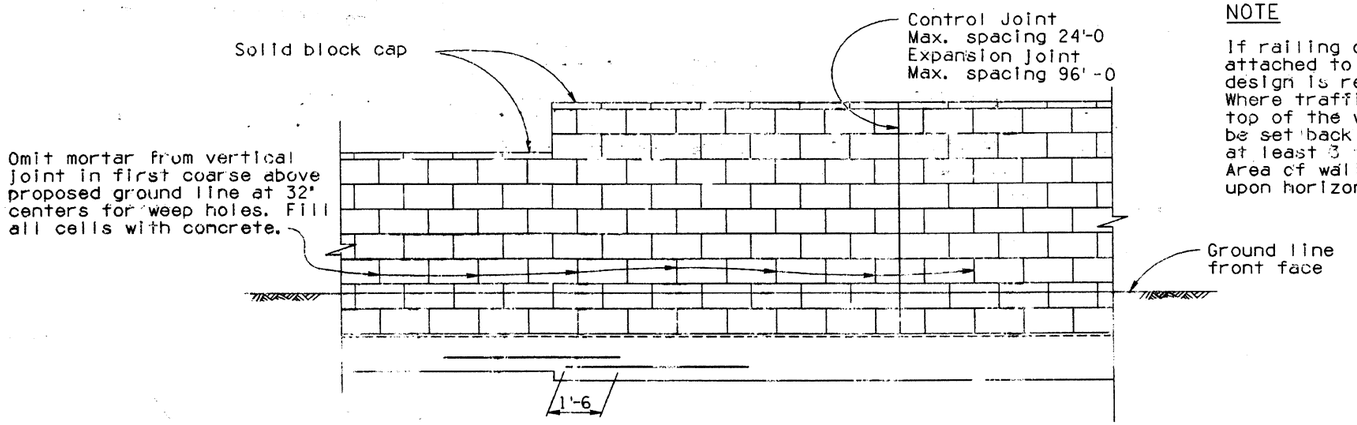

TYPICAL ELEVATION

NOTE

If railing or barrier is directly attached to the wall, a special design is required.
Where traffic is adjacent to the top of the wall, guardrail should be set back from the layout line at least 3 feet.
Area of wall for payment is based upon horizontal length and height 'H'.

GENERAL NOTES

Construction - Arizona Department of Transportation Standard Specifications for Road and Bridge Construction.

Design - AASHTO Standard Specifications for Highway Bridges, 1983 Edition, and 1984 through 1986 interim Specifications.

Masonry block, mortar and grout as per 1985 Uniform Building Code.

Dead Load - Weight of backfill = 120 PCF
Angle of internal friction = 33°15'.

All concrete shall be Class 'S' unless noted otherwise.

Reinforcing steel shall conform to ASTM Specification A615. Bars shall be designed as Grade 40 but may be furnished as Grade 40 or Grade 60.

All bend dimensions for reinforcing steel shall be out to out of bars. All placement dimensions for reinforcing steel shall be to center of bars unless noted otherwise.

All reinforcing steel shall have 2" clear cover unless noted otherwise.

Stresses - Concrete ..... f'c = 3,000 psi
Masonry ..... f'm = 1,350 psi
Reinf. Steel ..... fs = 20,000 psi

Design requires a minimum allowable Soil Pressure of 1,500 PSF.

For wall treatment and type of block see Project Plans.

This drawing compatible with block types shown on Arizona Masonry Guild Standard #1080-80, #1090-80, #2000-80 and #2010-80.

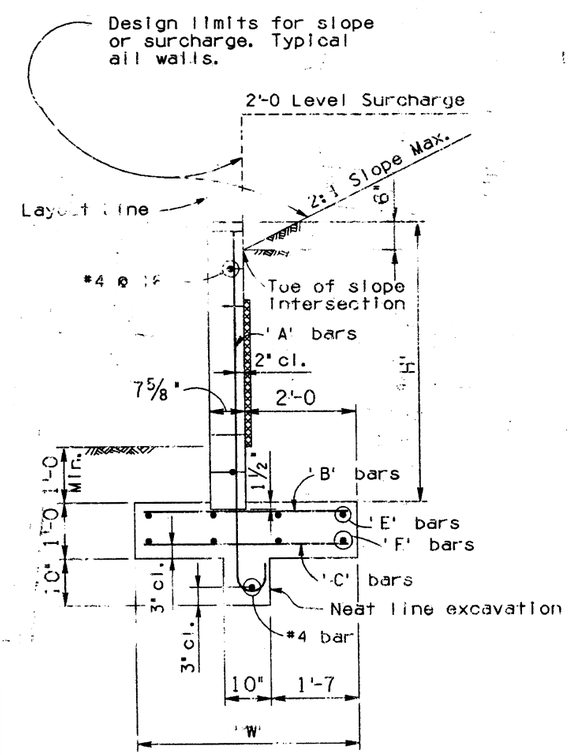

WALL TYPE A

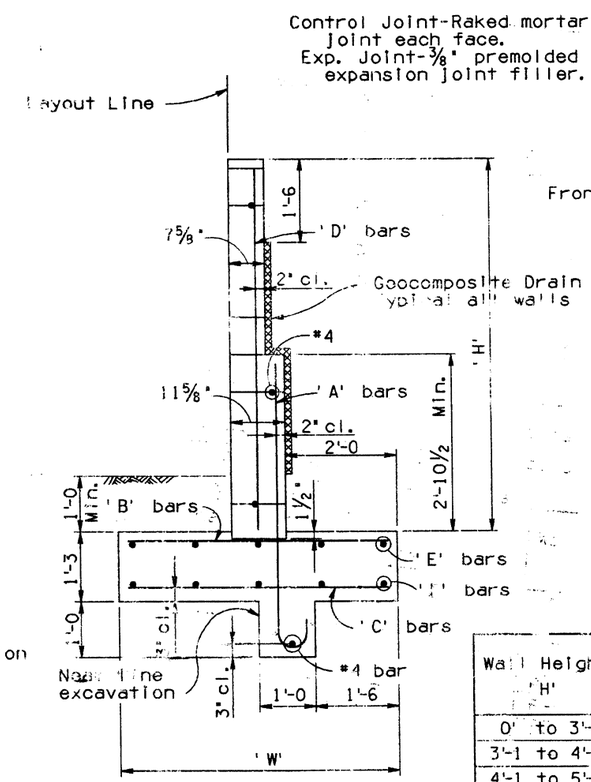

WALL TYPE B

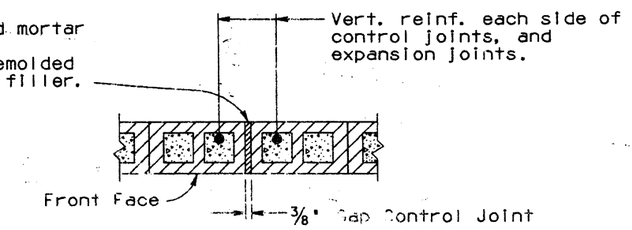

CONTROL JOINT DETAIL

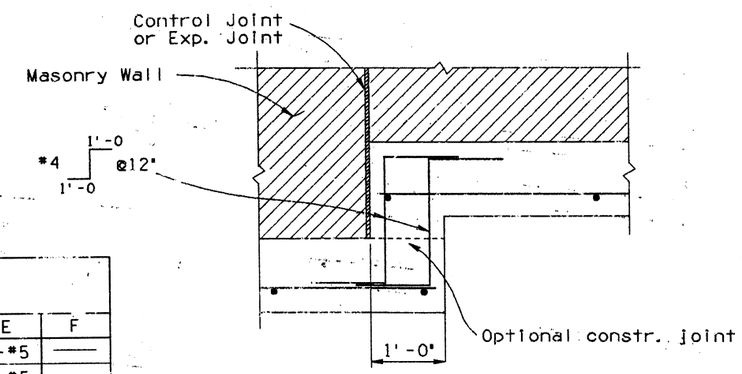

FOOTING STEP DETAIL

Wall Height 'H'	Wall Type	Ftg. Width 'W'	Reinforcing Bars A	B	C	D	E	F
0' to 3'-0	A	3'-0	#4@16"	#4@16"	——	——	3-#5	——
3'-1 to 4'-0	A	3'-6	#4@16"	#4@16"	——	——	4-#5	——
4'-1 to 5'-0	A	4'-0	#5@16"	#4@16"	#4@16"	——	4-#4	4-#4
5'-1 to 6'-0	B	4'-6	#5@16"	#4@16"	#4@16"	#4@16"	5-#4	5-#4
6'-1 to 7'-0	B	5'-0	#6@16"	#5@16"	#5@16"	#4@16"	5-#4	5-#4
7'-1 to 8'-0	B	5'-6	#6@12"	#5@12"	#5@12"	#5@12"	4-#5	4-#5

DESIGN	DRAWN	CHECKED	NO	DESCRIPTION OF REVISIONS	MADE BY	DATE
			1			
			2			
			3			
			4			

DESIGN APPROVED: J. D. Dard

APPROVED FOR DISTRIBUTION: D. L. Carnelison

ARIZONA
DEPARTMENT OF TRANSPORTATION
HIGHWAYS DIVISION
STANDARD DRAWINGS

MASONRY RETAINING WALLS

REVISION

STANDARD NO. B-18.50

CADD FILENAME= ZFA
VIEW NAME=

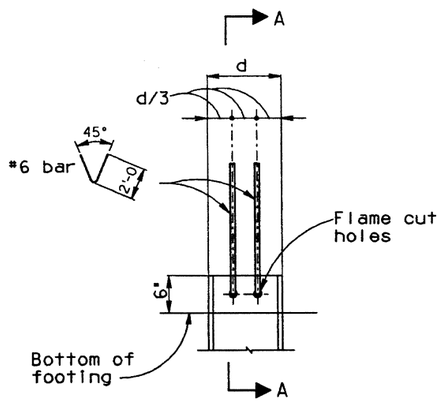

ELEVATION

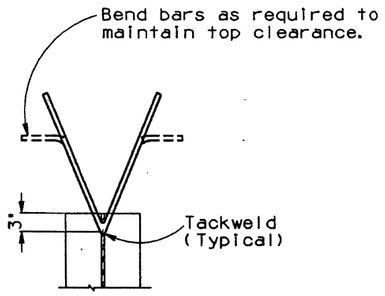

SECTION A-A

PILE ANCHOR DETAIL

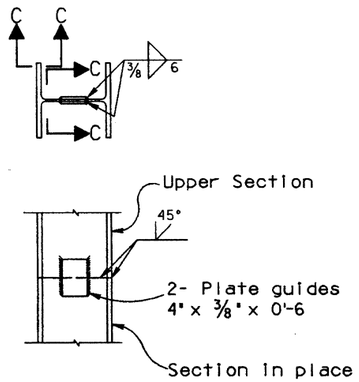

PILE SPLICE DETAIL

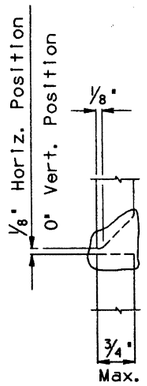

SECTION C-C

GENERAL NOTES:

Construction - Arizona Department of Transportation Standard Specifications for Road and Bridge Construction.

Structural Steel shall conform to ASTM Specification A36.

All welding shall conform to the requirements of the American Welding Society, Structural Welding Code, D1.1, 1980, revised to date, and as modified by the AASHTO Standard Specifications for Welding of Structural Steel Highway Bridges, 1981, revised to date.

Roadway Drains shall conform to ASTM Specifications A53, Type S, grade "B". Galvanize after fabrication in accordance with ASTM Specifications A123.

Reinforcing Steel shall conform to ASTM Spec. A615. Bars shall be grade 40 or Grade 60, fs= 20,000 psi.

PILE SPLICE NOTE:

When piling is to be spliced for further driving, upper section shall be lowered on section in place and tapped lightly with hammer to full bearing before butt welds are made. When piling is to be extended without further driving, omit guide plates and make butt welds continuous across web.

PILE POINT NOTE: (Only when required).

Manufactured pile points shall be attached by means of a single bevel groove weld across the full width of each exterior face of the flanges of the pile.

The flanges of the pile shall be prepared by flame cutting a 45 degree bevel at the bottom edge of each exterior face of flanges. 45 degrees bevel size shall be 1/2 the flange thickness.

Groove welds shall be 5/16 " for all HP piles 8" thru 14", HP14x117 shall be 7/16 ".

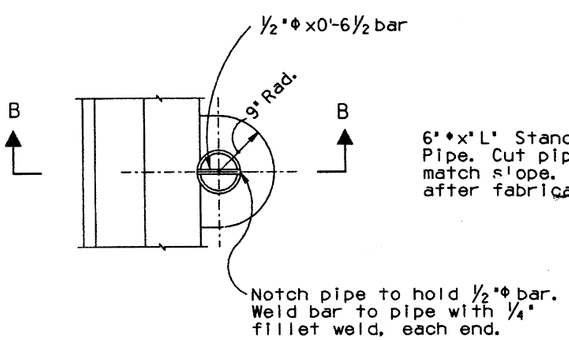

PLAN

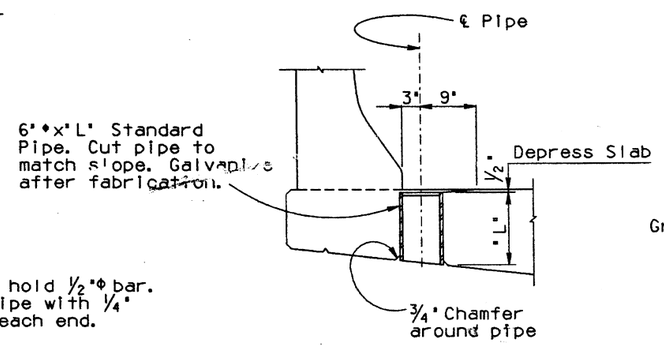

SECTION B-B

DECK DRAIN DETAIL

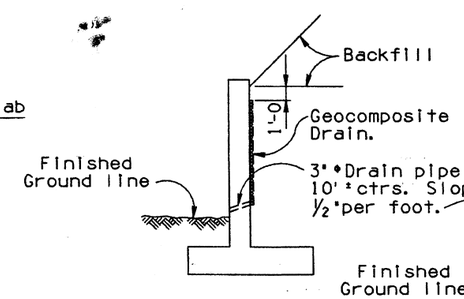

ALTERNATE A

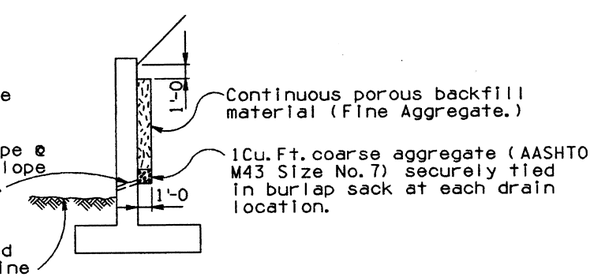

ALTERNATE B

WALL DRAINAGE

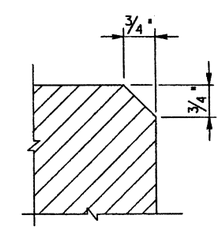

Chamfer all exposed corners thus unless otherwise noted. This note applicable to all sheets pertaining to the structure.

CHAMFER DETAIL

NO	DESCRIPTION OF REVISIONS	MADE BY	DATE
1	Total dwg. revised	C.H.	6-88
2			
3			
4			

DESIGN
DRAWN
CHECKED

Registered Professional Engineer (Civil) Arizona U.S.A.	DESIGN APPROVED F. D. Davis	ARIZONA DEPARTMENT OF TRANSPORTATION HIGHWAYS DIVISION STANDARD DRAWINGS	REVISION 7-88
	APPROVED FOR DISTRIBUTION D. L. Carollison	MISCELLANEOUS DETAILS FOR BRIDGES	STANDARD NO. B-19.10

CADD FILENAME= ZFA
VIEW NAME=

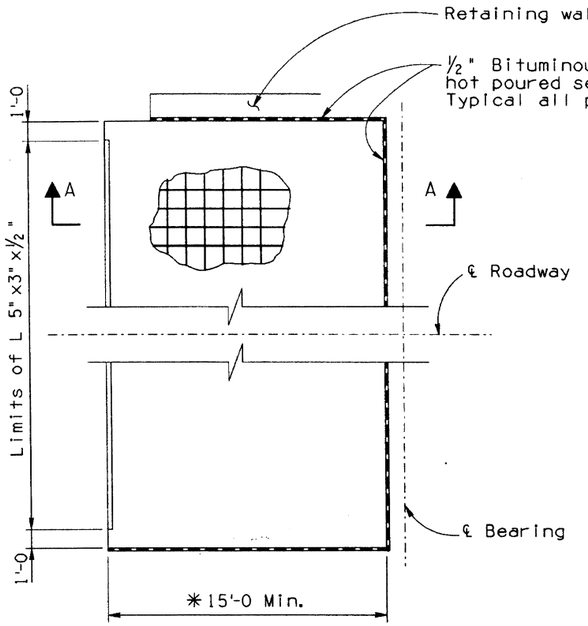

PLAN A
Rt. angle Bridge

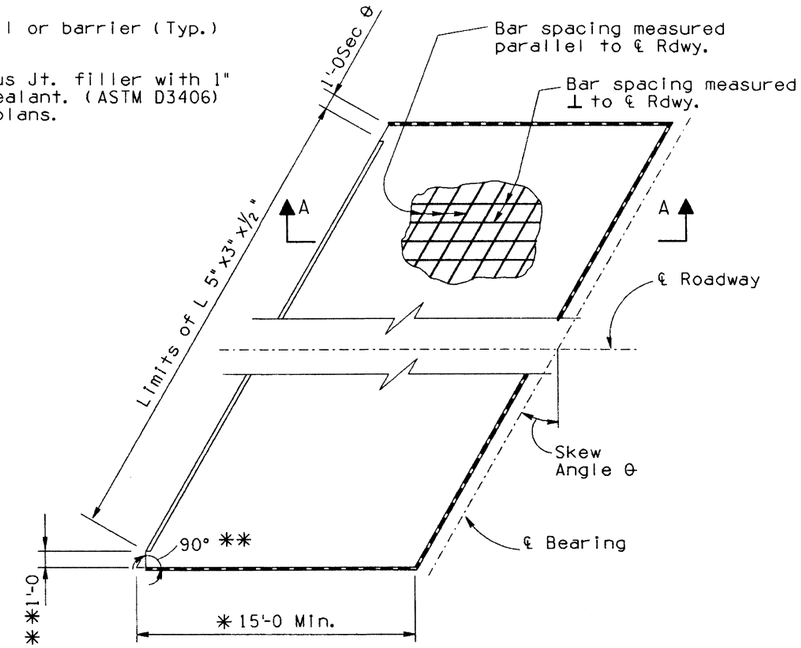

PLAN B
Skewed Bridge without Anchor Slab
Skew angle ≤ 45°

*Length shall be increased when necessary to eliminate surcharge load.
**For skew angle over 15°

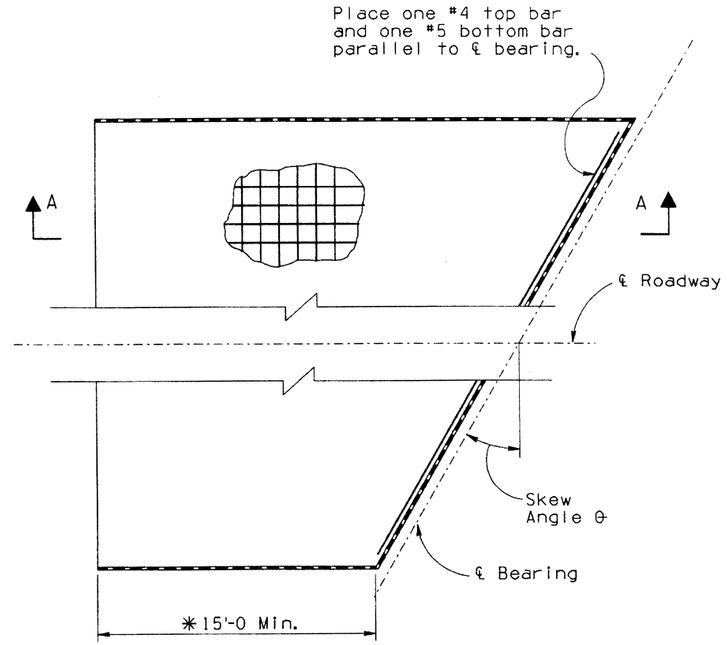

PLAN C
Skewed Bridge with Anchor Slab or Skewed Bridge without Anchor Slab, Skew Angle > 45°

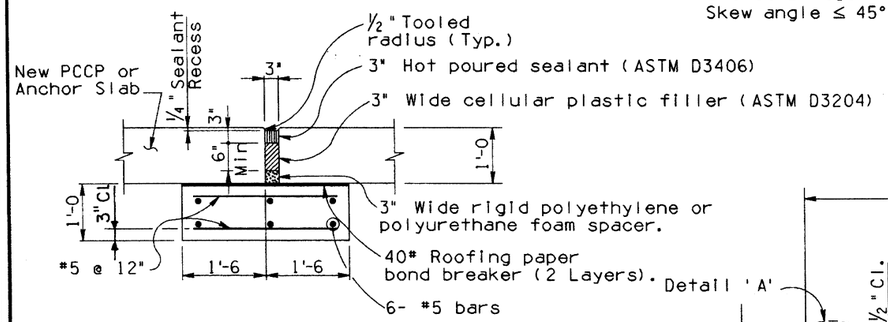

Concrete Pavement Alternate

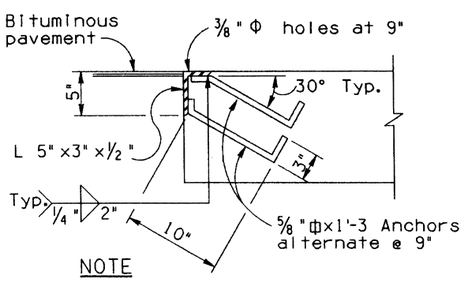

NOTE
Omit guard angle thru raised median and sidewalks.

Bituminous Pavement Alternate

DETAIL 'A'

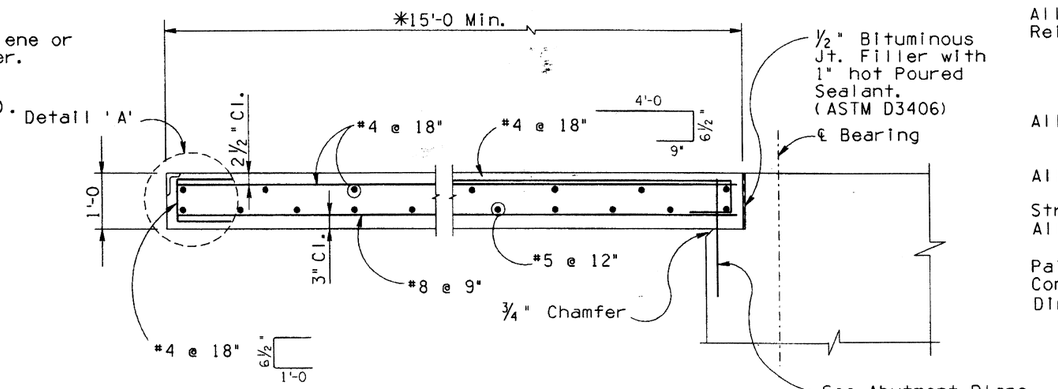

SECTION A-A

Approximate Quantities - PLAN A	
Class 'S' Concrete	0.556 C.Y.
Reinforcing Steel	86 Lbs.

Note:
Quantities are for one foot of roadway width 15' long.

GENERAL NOTES:

Construction - Arizona Department of Transportation Standard Specifications for Road and Bridge Construction, latest Edition.
Design - AASHTO Standard Specification for Highway Bridges, 1983, Edition, and 1984, 1985 and 1986 Interim Specifications.
All concrete shall be Class "S" f'c = 3000 psi.
Reinforcing steel shall conform to ASTM Specification A615. Bar sizes #6 and smaller shall be designed as Grade 40 but may be furnished as Grade 40 or Grade 60, fs= 20,000 psi. Bar size #7 and larger shall be designed and furnished as Grade 60, fs= 24,000 psi.
All bend dimensions for reinforcing steel shall be out to out of bars. All placement dimensions for reinforcing steel shall be to center of bars except as noted.
All reinforcing steel shall have 2" clear cover unless noted otherwise.
Structural steel shall conform to ASTM Specification A36.
All welding shall conform to the requirements of the American Welding Society, Bridge Welding Code, D1.5-88.
Paint and Painting shall conform to Standard Specifications.
Contact surfaces shall not be painted.
Dimensions shall not be scaled from drawings.

NO	DESCRIPTION OF REVISIONS	MADE BY	DATE
1	Miscellaneous changes	J.M.	4-92
2			
3			
4			

DESIGN
DRAWN
CHECKED

CADD FILENAME= ZFA
VIEW NAME=

Registered Professional Engineer (Civil) CERTIFICATE NO. 9910 F. DANIEL DAVIS 5-4-92 STATE OF ARIZONA U.S.A.

DESIGN APPROVED
F. Daniel Davis

APPROVED FOR DISTRIBUTION
Angus McBeth

ARIZONA
DEPARTMENT OF TRANSPORTATION
HIGHWAYS DIVISION
STANDARD DRAWINGS

APPROACH SLAB DETAILS

REVISION
4-92

STANDARD NO.
B-19.11

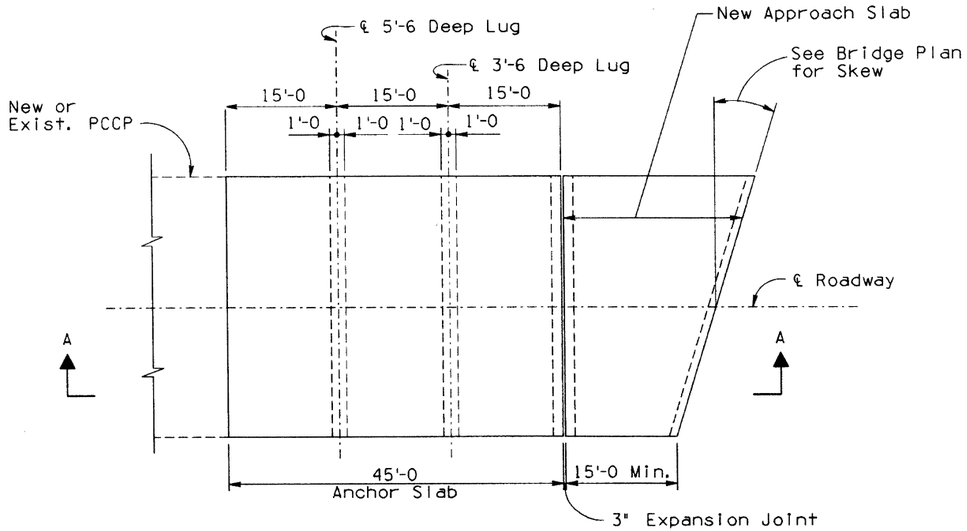

PLAN - NEW ANCHOR SLAB

(For Pavement greater than 700 Ft. in length)

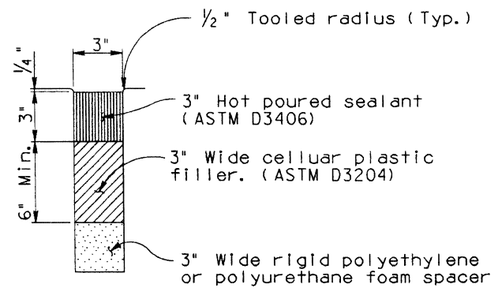

DETAIL 'A'

NOTES

All Concrete shall be Class 'S', f'c = 3,000 psi.

All Reinforcing Steel dimensions shall be to center of bars unless noted otherwise.

All Reinforcing Steel shall have 3" clear cover unless noted otherwise.

Reinforcing Steel shall conform to ASTM Spec. A615. Bar size #6 and smaller are designed as Grade 40 and furnished as Grade 40 or Grade 60, fs = 20,000 psi. Bar size #7 and larger shall be Grade 60, fs = 24,000 psi.

Anchor lug to be cast in precompacted roadway embankment or cast in forms and soil compacted to embankment requirements prior to the casting of Anchor Slab.

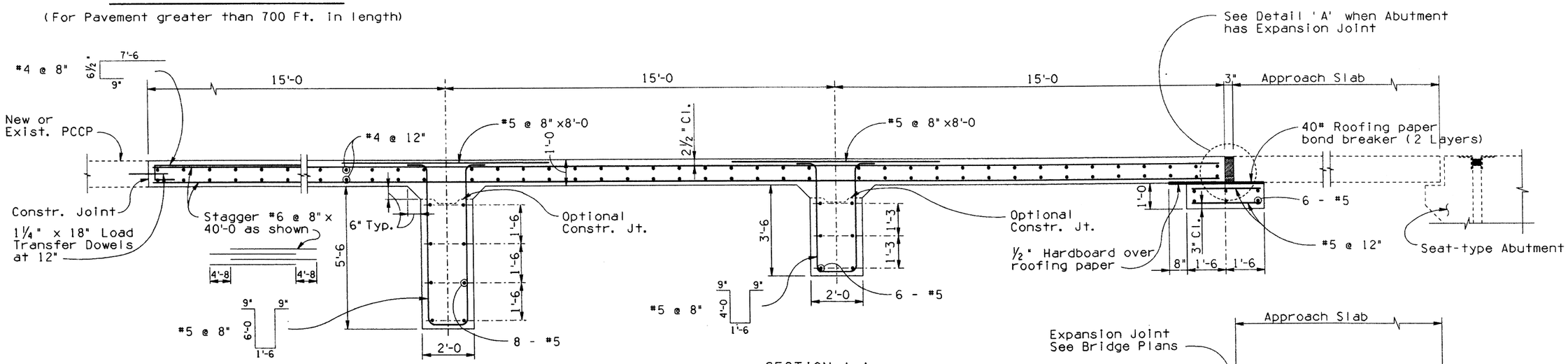

SECTION A-A

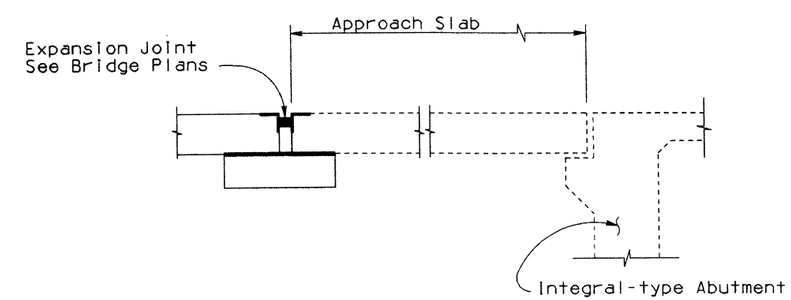

Approximate Quantities	
Class 'S' Concrete	2.463 C.Y.
Reinforcing Steel	335 Lbs.

Note:
Quantities are for one foot of roadway width.

DESIGN		NO	DESCRIPTION OF REVISIONS	MADE BY	DATE
DRAWN		1	Quantities and Miscellaneous	J.N.	4-92
CHECKED		2			
		3			
		4			

CADD FILENAME= ZFA
VIEW NAME=

DESIGN APPROVED

APPROVED FOR DISTRIBUTION

ARIZONA DEPARTMENT OF TRANSPORTATION HIGHWAYS DIVISION STANDARD DRAWINGS

ANCHOR SLAB DETAILS (PCC PAVEMENT GREATER THAN 700 FT.)

REVISION 4-92

STANDARD NO. B-19.12

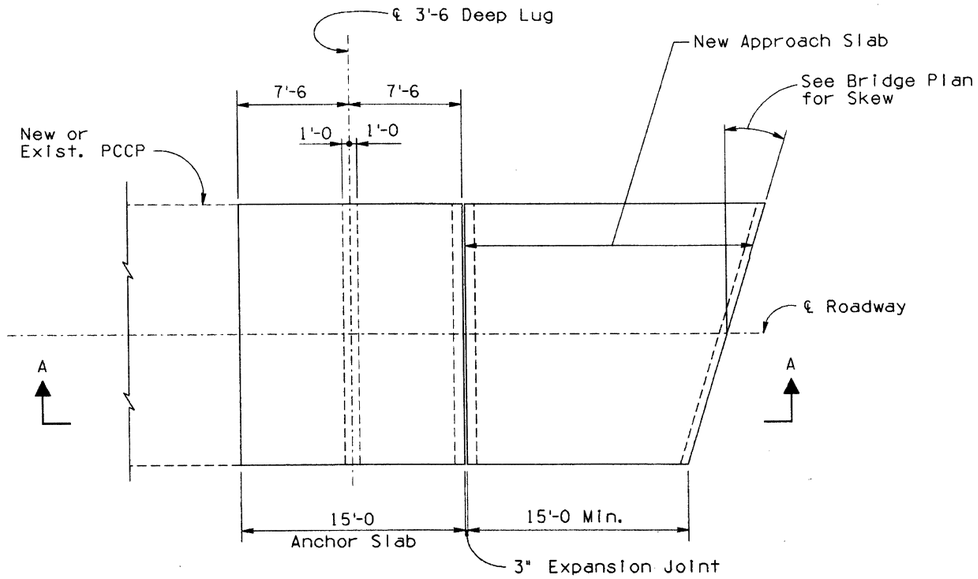

PLAN - NEW ANCHOR SLAB

(For Pavement less than 300 Ft. in length)

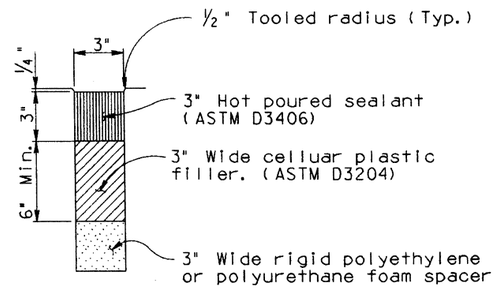

DETAIL 'A'

NOTES

All Concrete shall be Class 'S', f'c = 3,000 psi.

All Reinforcing Steel dimensions shall be to center of bars unless noted otherwise.

All Reinforcing Steel shall have 3" clear cover unless noted otherwise.

Reinforcing Steel shall conform to ASTM Spec. A615. Bar size #6 and smaller are designed as Grade 40 and furnished as Grade 40 or Grade 60, fs = 20,000 psi. Bar size #7 and larger shall be Grade 60, fs = 24,000 psi.

Anchor lug to be cast in precompacted roadway embankment or cast in forms and soil compacted to embankment requirements prior to the casting of Anchor Slab.

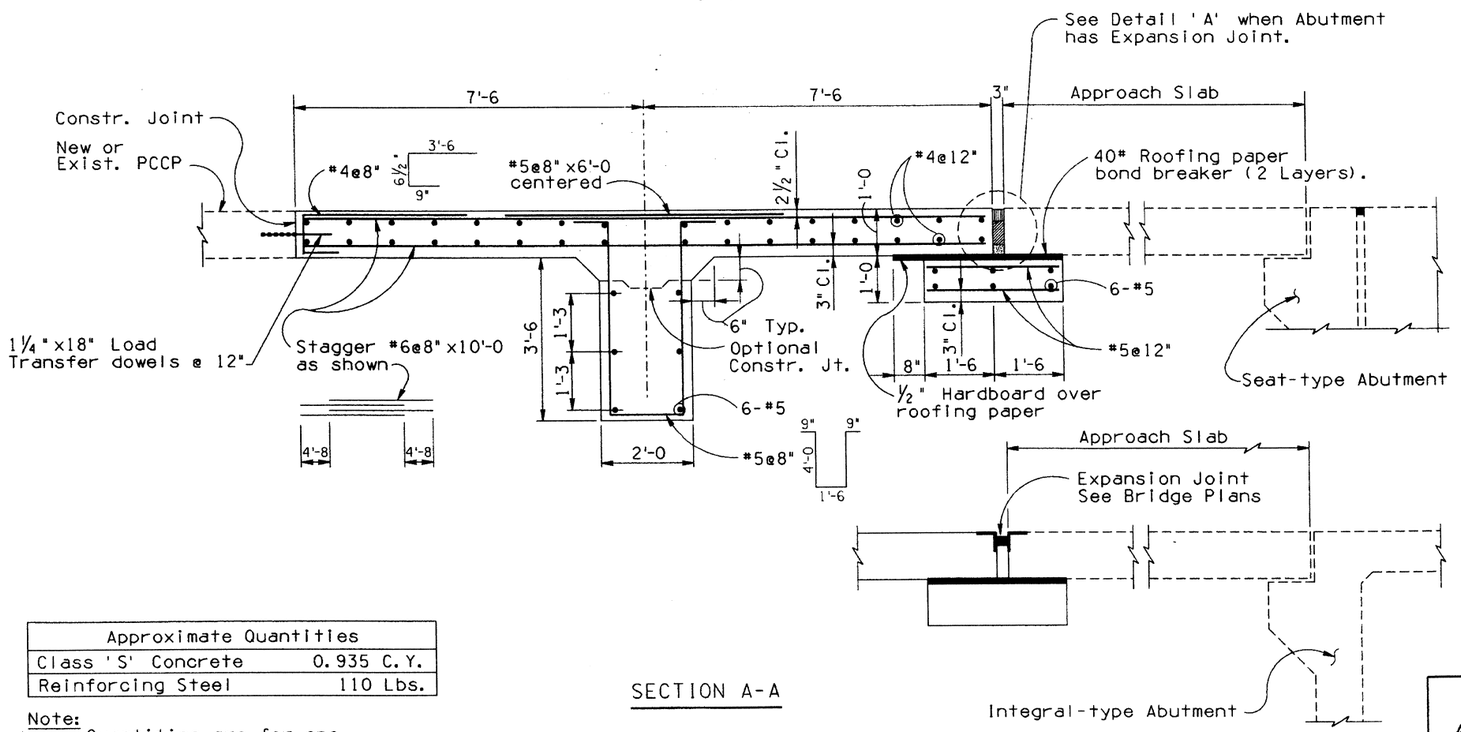

SECTION A-A

Approximate Quantities	
Class 'S' Concrete	0.935 C.Y.
Reinforcing Steel	110 Lbs.

Note:
Quantities are for one foot of roadway width.

DESIGN			NO	DESCRIPTION OF REVISIONS	MADE BY	DATE
DRAWN	C.H.	4-92	1			
CHECKED	K.W.	4-92	2			
			3			
			4			

Registered Professional Engineer (Civil) Certificate No. 9910 F. DANIEL DAVIS Date Signed 5-14-92 Arizona U.S.A.	DESIGN APPROVED F. Daniel Davis	ARIZONA DEPARTMENT OF TRANSPORTATION HIGHWAYS DIVISION STANDARD DRAWINGS	REVISION
	APPROVED FOR DISTRIBUTION August Hart	ANCHOR SLAB DETAILS (PCC PAVEMENT LESS THAN 300 FT.)	STANDARD NO. B-19.14

ZF1:(051020)SB1914.DGN;3 VIEW NAME: BR
08-MAY-1992 15:31

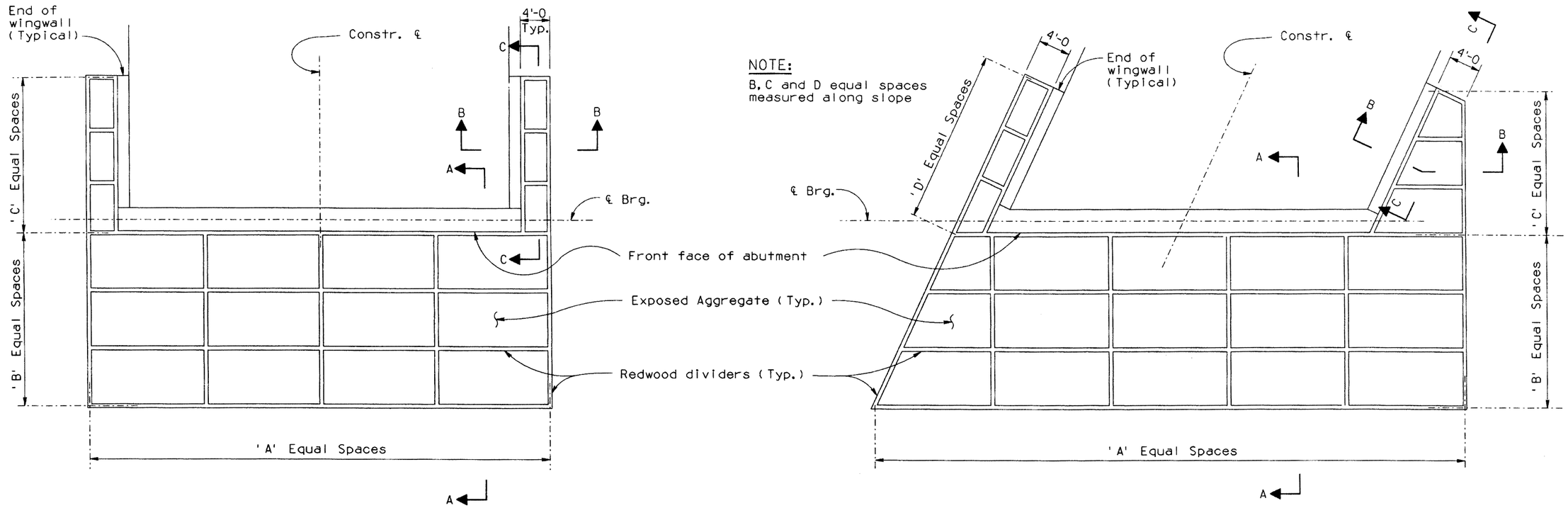

PLAN - RIGHT ANGLE BRIDGE

PLAN - SKEW BRIDGE

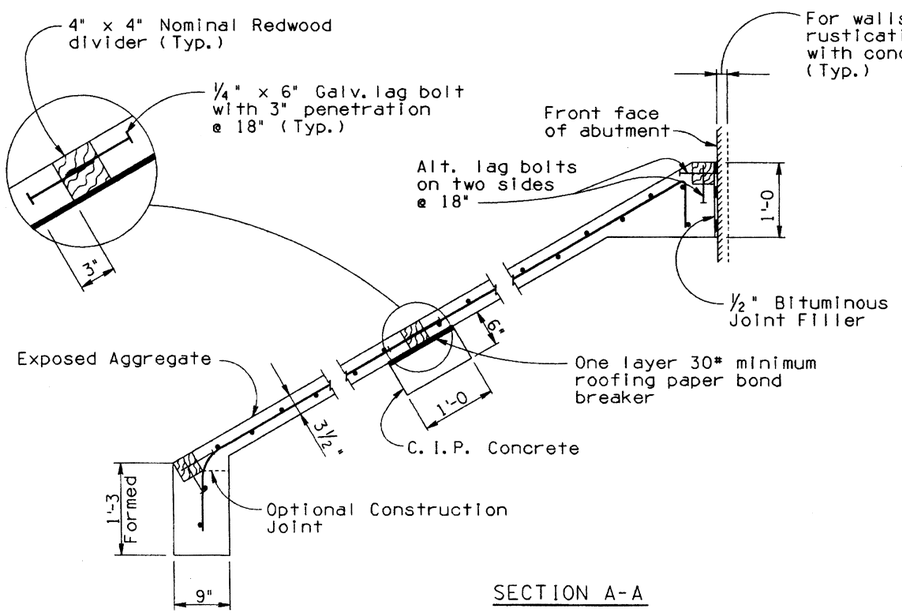

SECTION A-A

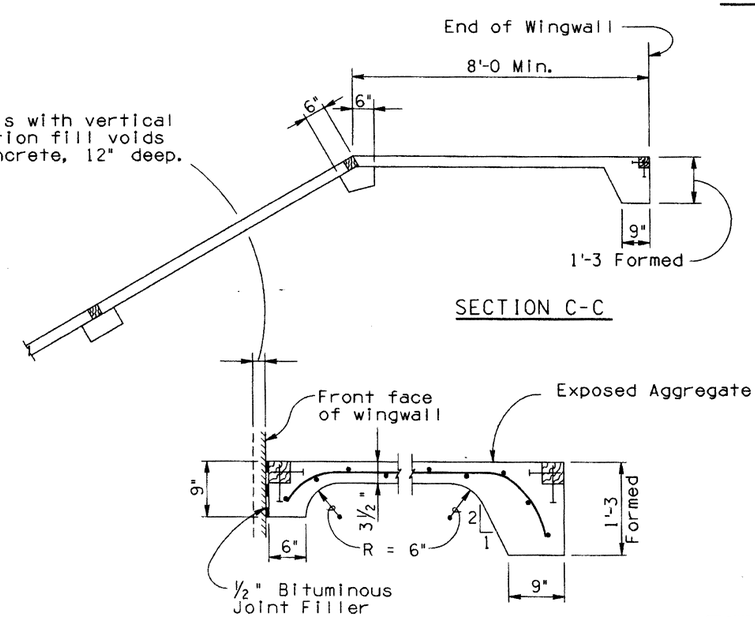

SECTION C-C

SECTION B-B

NOTES:

All slopes shall be paved as shown. See Contract Plans for number of A, B, C and D Equal Spaces.
Concrete for slope paving shall be Class 'S', f'c = 3000 psi. with exposed aggregate surface. Maximum size coarse aggregate shall be ¾ inches.
Welded wire fabric shall be 6 x 6 - W1.4 x W1.4.

DESIGN	NO	DESCRIPTION OF REVISIONS	MADE BY	DATE
DRAWN	1	Total redesign of slope paving	J. M.	6-88
CHECKED	2	Miscellaneous changes	C. H.	4-92
	3			
	4			

Registered Professional Engineer (Civil) 9910 F. DANIEL DAVIS Arizona U. S. A.	DESIGN APPROVED	ARIZONA DEPARTMENT OF TRANSPORTATION HIGHWAYS DIVISION STANDARD DRAWINGS	REVISION 4-92
	APPROVED FOR DISTRIBUTION	SLOPE PAVING DETAILS UNDERPASS	STANDARD NO. B-19.20

CADD FILENAME= ZFA
VIEW NAME=

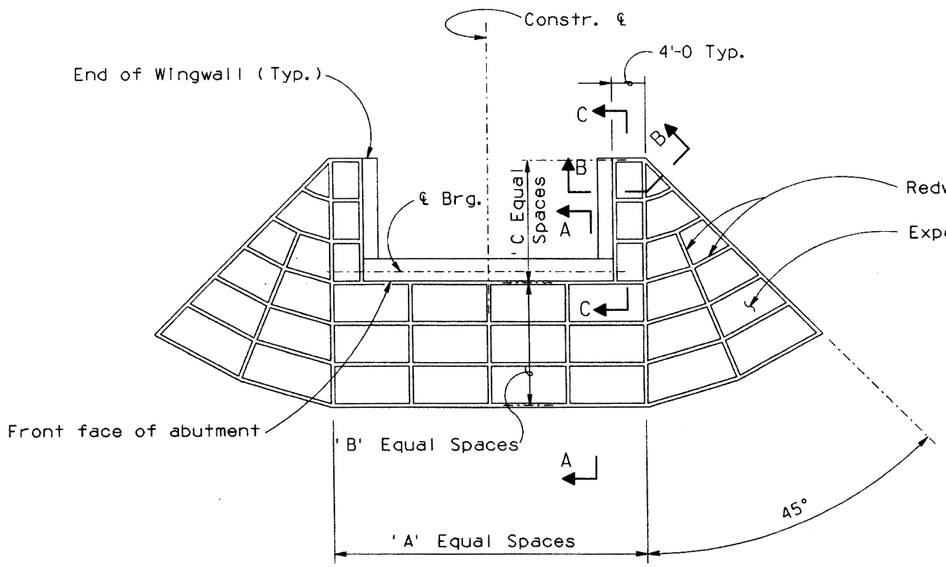

PLAN - RIGHT ANGLE BRIDGE

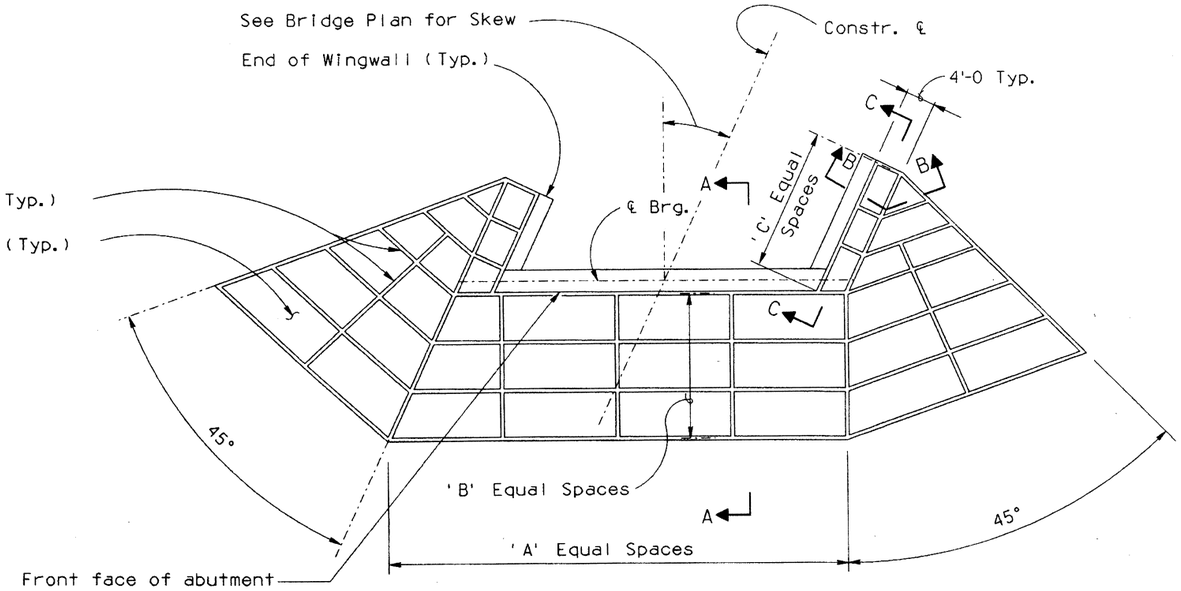

PLAN - SKEW BRIDGE

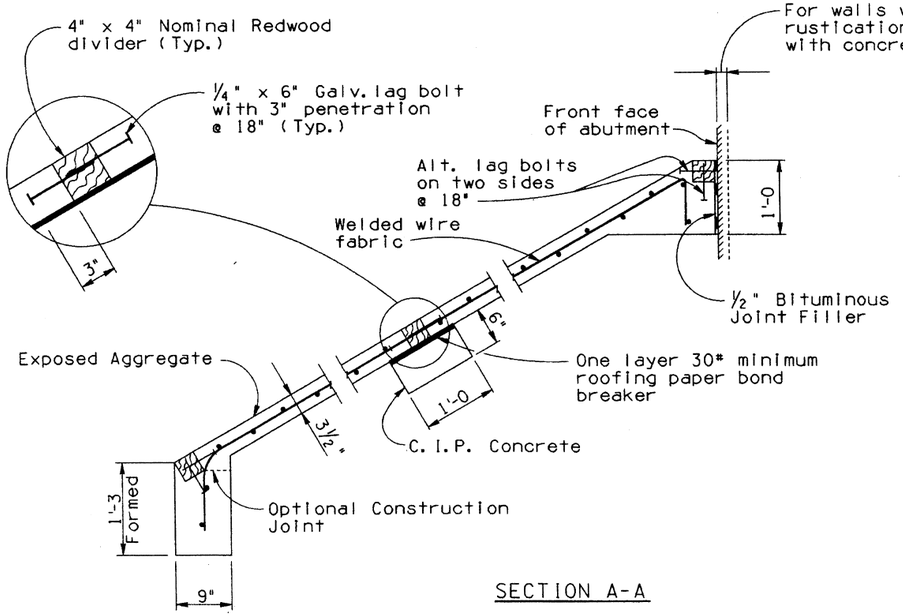

SECTION A-A

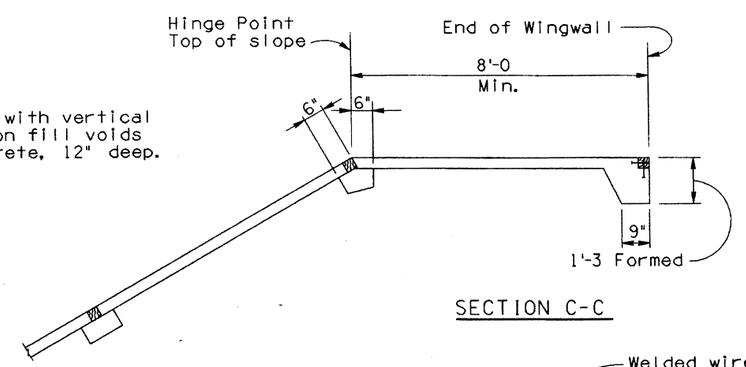

SECTION C-C

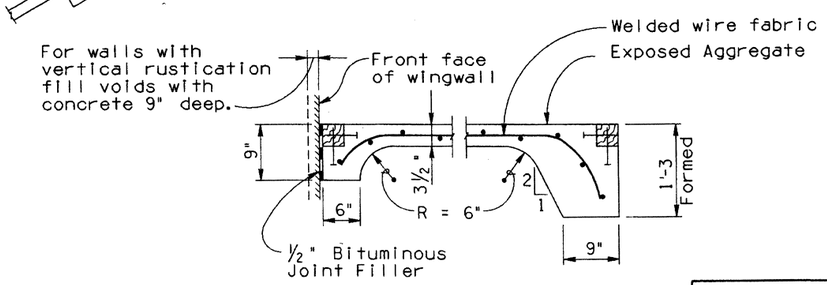

SECTION B-B

NOTES

All slopes shall be paved as shown. See Contract Plans for number of A, B and C Equal Spaces.
Concrete for slope paving shall be Class 'S' (f'c = 3000 psi). with exposed aggregate surface. Maximum size coarse aggregate shall be ¾ inches.
Welded wire fabric shall be 6 x 6 - W1.4 x W1.4.

DESIGN		NO	DESCRIPTION OF REVISIONS	MADE BY	DATE
DRAWN	C.H.	1			
CHECKED	K.W.	2			
		3			
		4			

Registered Professional Engineer (Civil) 9910 F. DANIEL DAVIS Arizona U.S.A.	DESIGN APPROVED	ARIZONA DEPARTMENT OF TRANSPORTATION HIGHWAYS DIVISION STANDARD DRAWINGS	REVISION
	APPROVED FOR DISTRIBUTION	SLOPE PAVING DETAILS OVERPASS	STANDARD NO. B-19.21

ZF1:(051020)SB1921.DGN;1 VIEW NAME: BR
08-MAY-1992 15:36

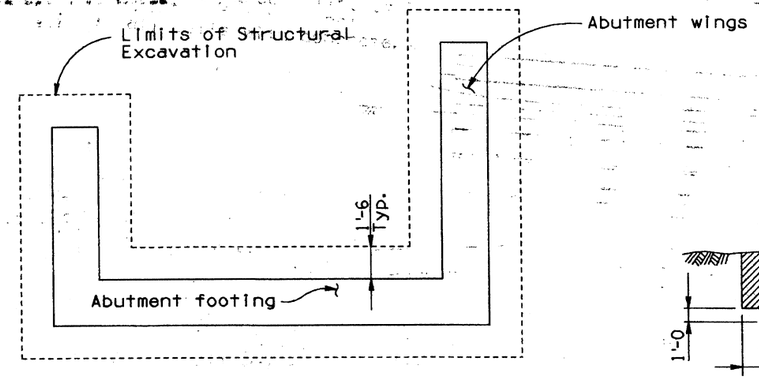

TYPICAL ABUTMENT FOOTING PLAN

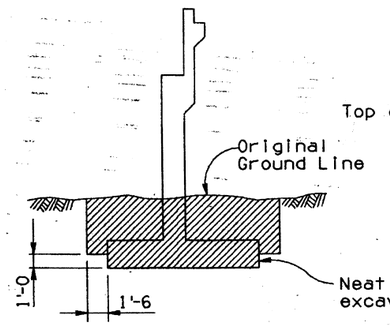

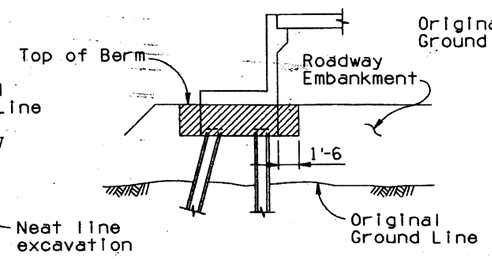

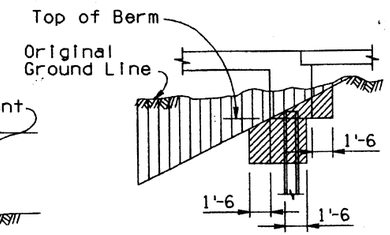

TYPICAL ABUTMENT SECTIONS

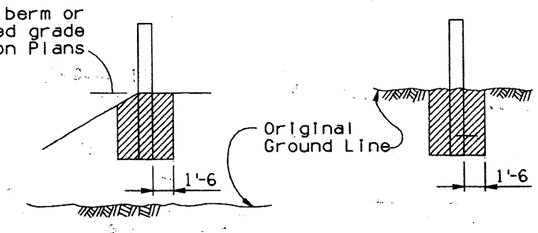

WINGWALLS

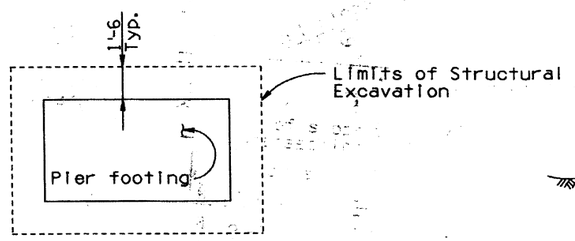

TYPICAL PIER FOOTING PLAN

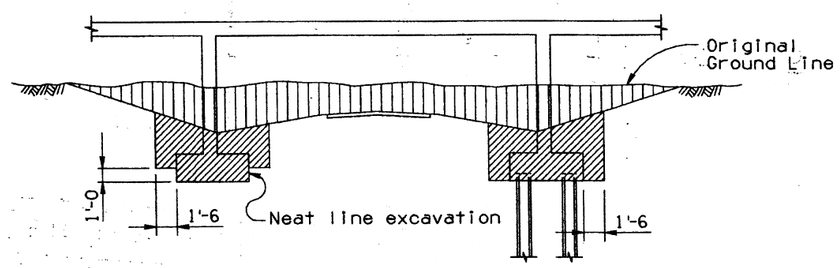

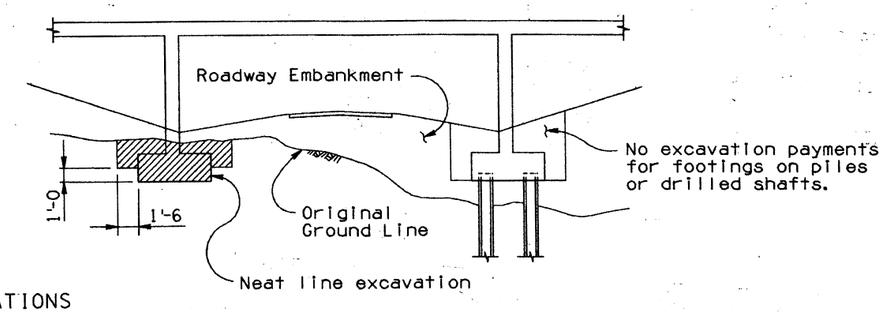

TYPICAL PIER ELEVATIONS

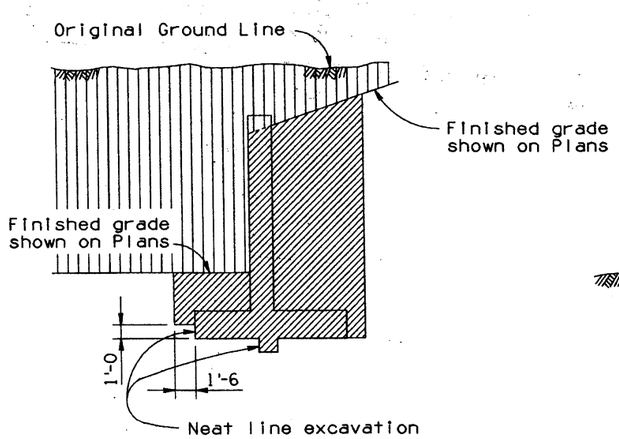

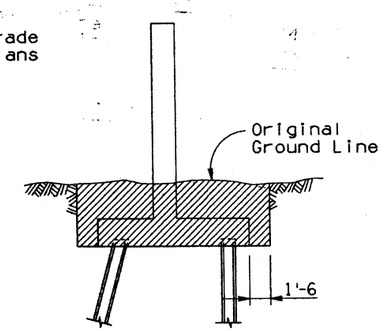

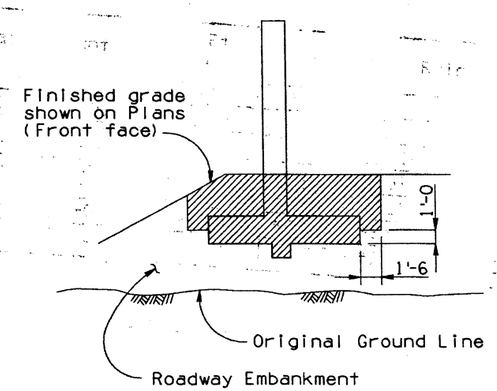

TYPICAL RETAINING WALL SECTIONS

NOTES

Indicates Structural Excavation

Indicates Roadway Excavation

For any footing on piles or drilled shafts do not use neat line excavation.
For structure foundations above original ground line, construct roadway embankment to top of berm or finished grade before strucural excavation is made.
If no roadway excavation or embankment is involved, structural excavation shall be measured from the original ground line.
'Top of berm' shall mean the top of berm or elevation at point of intersection between front face and slope.

DESIGN			
DRAWN			
CHECKED			

NO	DESCRIPTION OF REVISIONS	MADE BY	DATE
1			
2			
3			
4			

CADD FILENAME= 2FA
VIEW NAME=

Registered Professional Engineer (Civil) CERTIFICATE NO. 9910 F. DANIEL DAVIS Date Signed 01/18/06 Arizona U.S.A.	DESIGN APPROVED F. D. Davis	ARIZONA DEPARTMENT OF TRANSPORTATION HIGHWAYS DIVISION STANDARD DRAWINGS	REVISION
	APPROVED FOR DISTRIBUTION J. A. Bryant, Jr.	STRUCTURAL EXCAVATION PAYMENT LIMITS	STANDARD NO. B-19.30

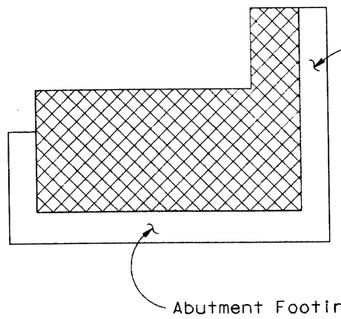

TYPICAL ABUTMENT FOOTING PLAN

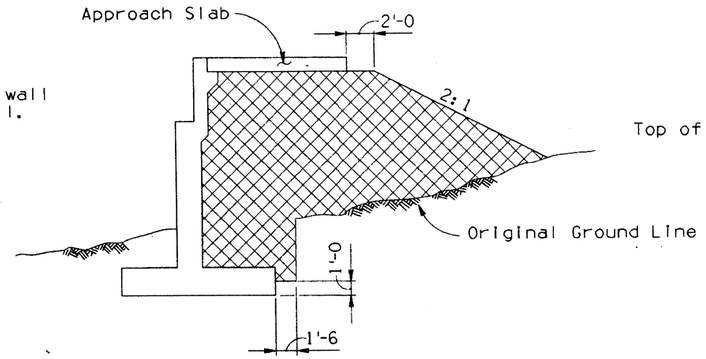

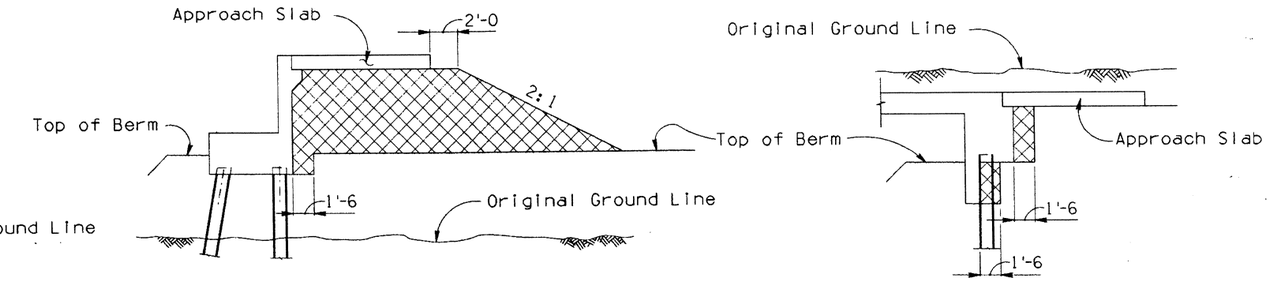

TYPICAL ABUTMENT SECTIONS WITH APPROACH SLABS

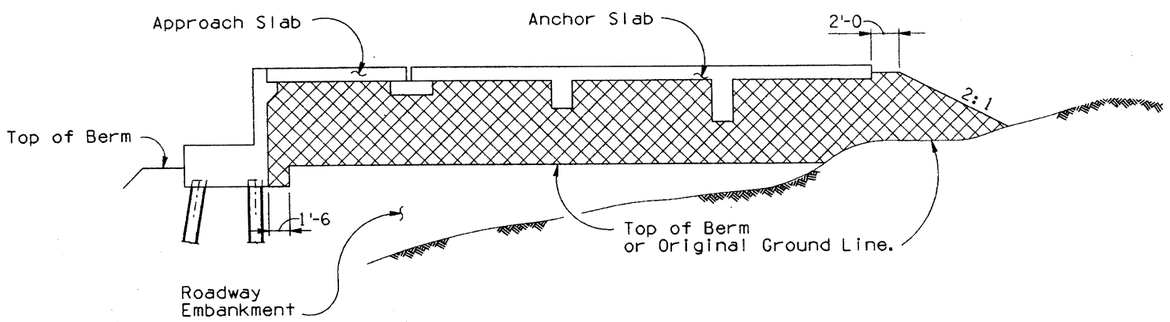

TYPICAL ABUTMENT SECTION WITH APPROACH SLAB AND ANCHOR SLAB

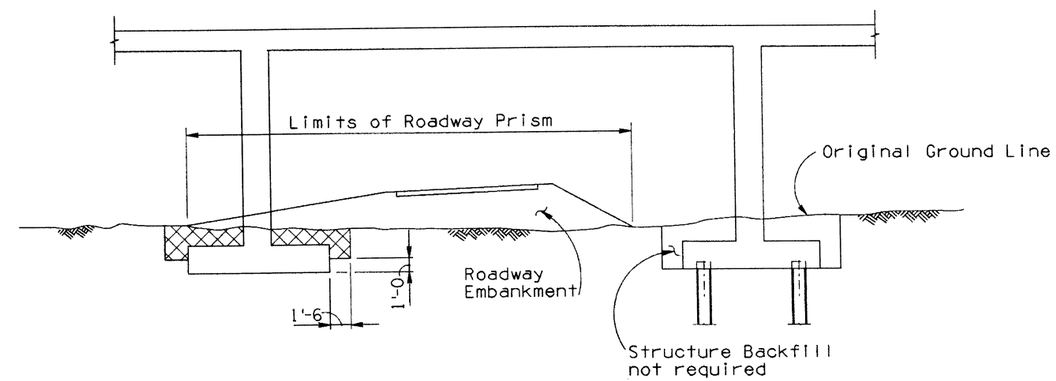

TYPICAL PIER ELEVATION

NOTE: Structure Backfill is required for piers only when the pier falls within the roadway prism.

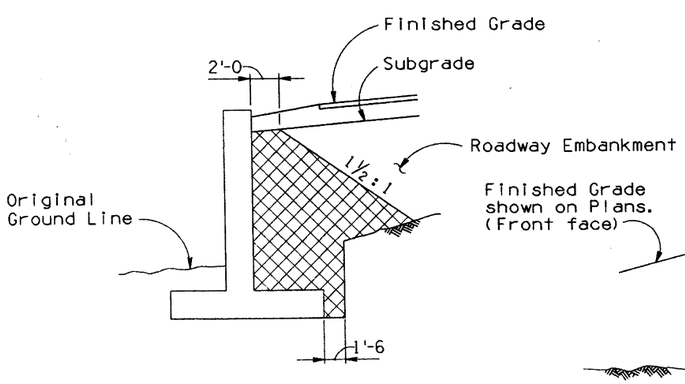

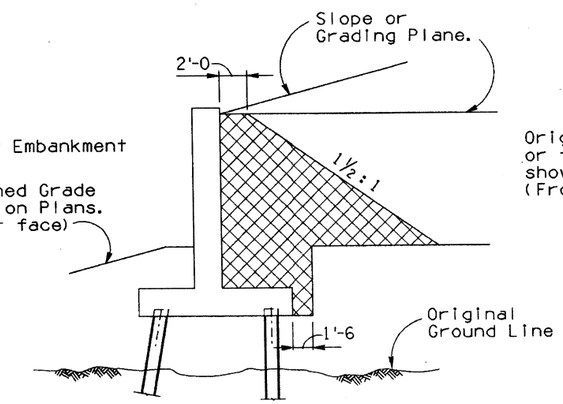

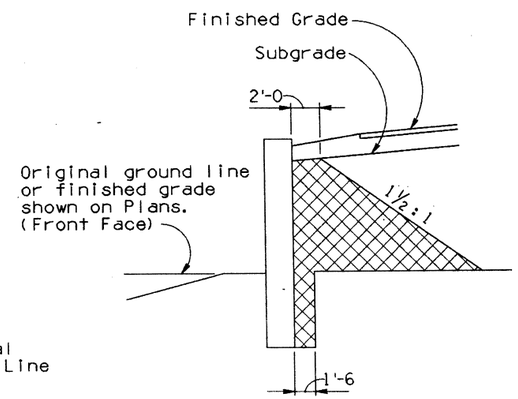

TYPICAL WALL SECTIONS

NOTE:

Indicates Structure Backfill.

Roadway Prism shall be the distance between points of intersection of Roadway Embankment and Original Ground Line.

"Top of Berm" shall mean the top of berm or elevation at point of intersection between front face and slope.

Registered Professional Engineer (Civil) CERTIFICATE NO. 9910 F. DANIEL DAVIS DATE SIGNED 5-14-92 Arizona U.S.A.	DESIGN APPROVED F. Daniel Davis	ARIZONA DEPARTMENT OF TRANSPORTATION HIGHWAYS DIVISION STANDARD DRAWINGS	REVISION 4-92
	APPROVED FOR DISTRIBUTION August Hart	STRUCTURE BACKFILL PAYMENT LIMITS	STANDARD NO. B-19.40

NO	DESCRIPTION OF REVISIONS	MADE BY	DATE
1	Misc. Changes	J.M.	4-92
2			
3			
4			

DESIGN
DRAWN
CHECKED

ZF1:(051020)SB1940.DGN:1 VIEW NAME:
08-MAY-1992 15:37

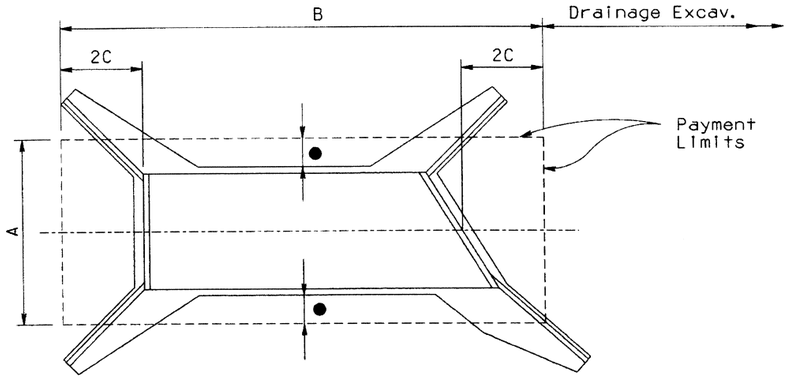

PLAN

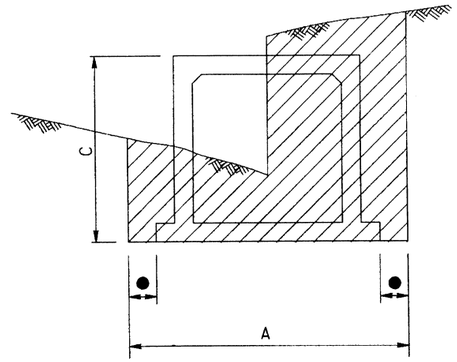

SECTION

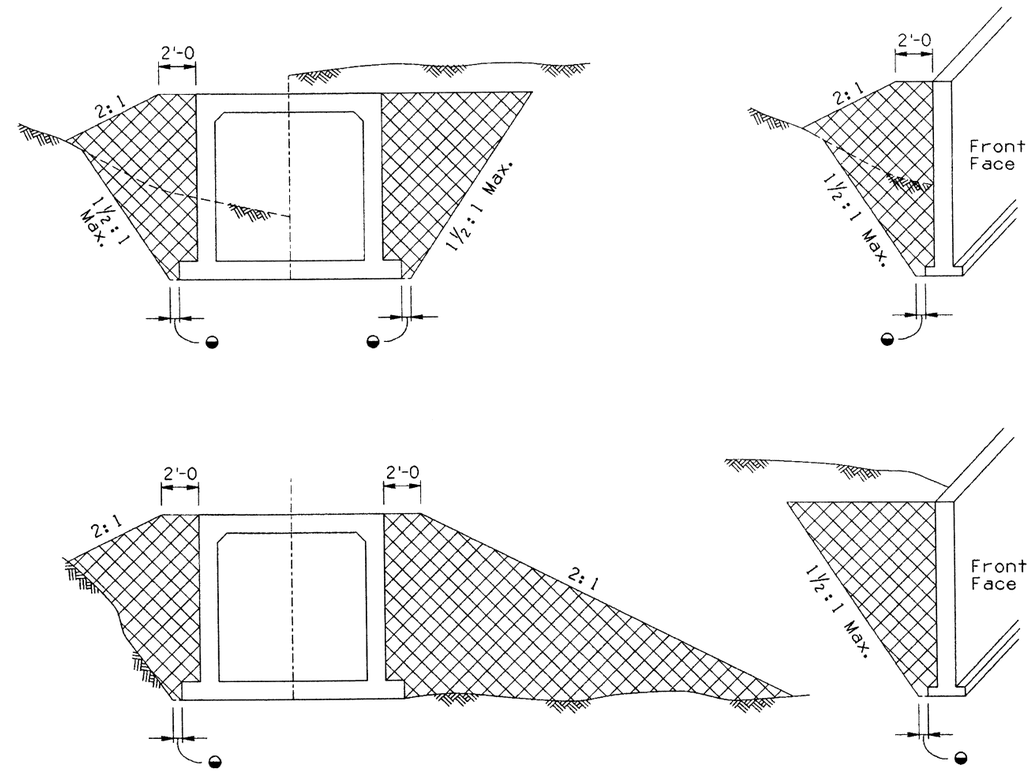

SECTION

END VIEW WING OF BOX CULVERT

STRUCTURAL EXCAVATION - PAYMENT LIMITS

Note: Payment limits shown include structural excavation for headwalls, cutoffwalls, wingwalls, end sections, etc.

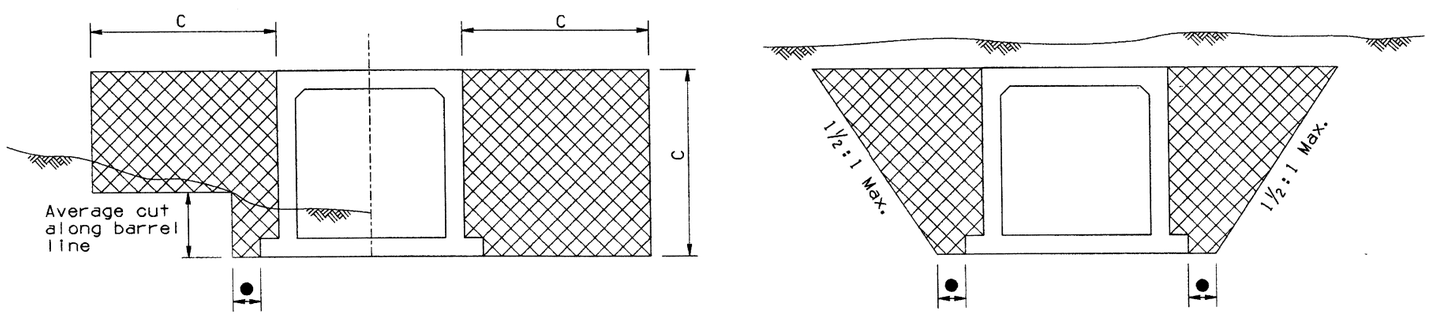

STRUCTURE BACKFILL - PLACEMENT

Note: Placement of structure backfill behind headwalls and wingwalls shall be the same as around structures.

LEGEND

A = Width
B = Length
C = Height of barrel or headwall without cutoff wall.
● 6" Max. in rock and trench, 1'-6 max. all others
◒ 6" Min. in rock and trench, 1'-6 min. all others
Indicates Structural Excavation
Indicates Structure Backfill

STRUCTURE BACKFILL - MEASUREMENT

Note: Computation of structure backfill quantities is based on the area of a typical installation times (the total length of structure plus 2H). No measurment is necessary for wing arms. Use H for box extensions on each end extended.

DESIGN			NO	DESCRIPTION OF REVISIONS	MADE BY	DATE
DRAWN	J.M.	4-92	1			
CHECKED	K.W.	4-92	2			
			3			
			4			

Registered Professional Engineer (Civil) 9910 F. DANIEL DAVIS DATE SIGNED 5-14-92 Arizona U.S.A.	DESIGN APPROVED F. Daniel Davis	ARIZONA DEPARTMENT OF TRANSPORTATION HIGHWAYS DIVISION STANDARD DRAWINGS	REVISION
	APPROVED FOR DISTRIBUTION Angelo Hanks	STRUCTURAL EXCAVATION & STRUCTURE BACKFILL FOR R.C.B. CULVERTS	STANDARD NO. B-19.50

ZF1:(051020)SB1950.DGN;2 VIEW NAME:
08-MAY-1992 15:40

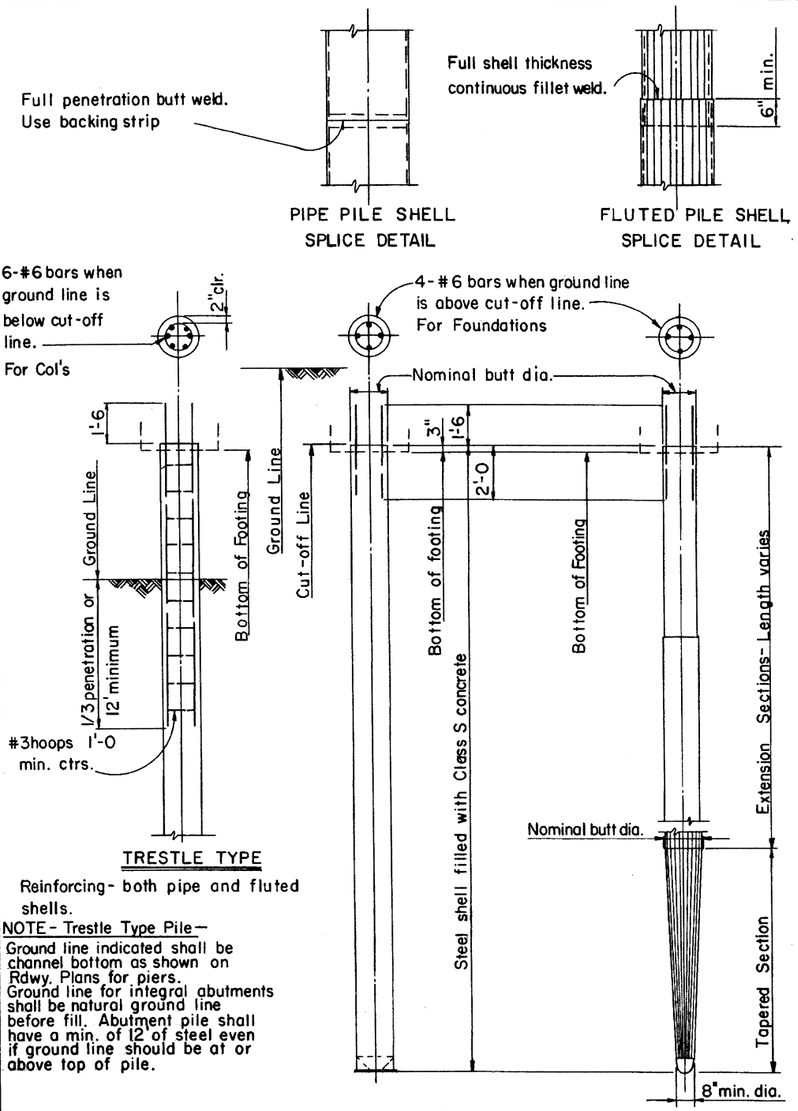

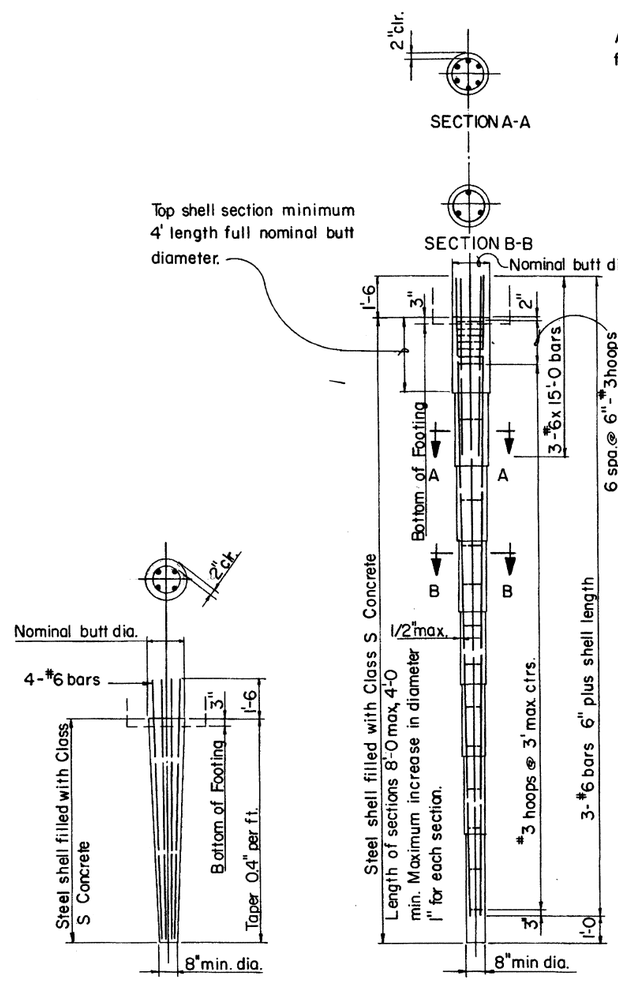

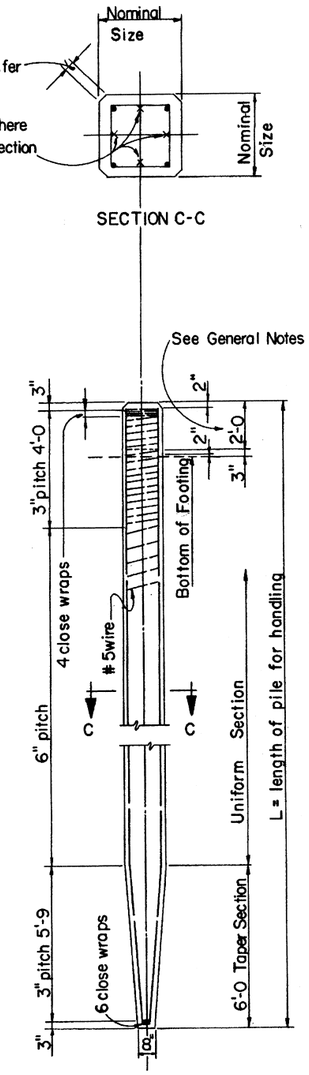

GENERAL NOTES

PRECAST AND CAST-IN-PLACE PILES

Design -AASHTO Standard Specifications for Highway Bridges 1977.

Construction – Arizona Departament of Transportation Standard Specification 1982, revised to date.

Reinforcing Steel shall conform to ASTM Spec. A 615.
Bar sizes #6 and smaller shall be Grade 40, f_s = 20 000 psi.
Bar sizes #7 and larger shall be Grade 60, f_s = 24 000 psi.
Spiral reinforcing shall be cold drawn wire conforming to ASTM Spec. A82.

PRECAST PILES

Precast piles shall be cast 2'-0 longer than net required length, or approved driving head provided. After driving to a depth satisfactory to the Engineer, the excess length shall be trimmed off to 3" above the bottom of the footing and the pile edges beveled. Vertical reinforcement shall be cut off to provide 1'-6 embedment. If extended pile is to be driven further, the longitudinal steel shall be lapped 40 diameters for the splice. Concrete for precast piles shall be Class S, internally vibrated.

CAST-IN-PLACE PILES

Contractor shall be responsible for furnishing shells and waterproof end closure of sufficient strength to drive without distortion, damage or leakage. Type of end closure shall be chosen by contractor to suit driving conditions, and shall not exceed shell diameter plus 1/2". Shells shall be driven only with manufacturer's standard driving head and, if necessary, with a driving mandrel.

Mill inspection of all shells shall conform to current Standard Specifications.

All shells shall be filled to cut off elevation with Class S concrete internally vibrated. (f'_c = 3000 psi)

Trestle bent piles shall have a minimum butt diameter of 14".

All pile material shall be new or unused.

PRECAST PILE PICK-UP NOTE: Pick-up points shall be plainly marked on all piles after removal of forms unless special lifting devices are attached for pick-up and all lifting shall be done at these points.

The use of special embedded or attached lifting devices, the employment of other pick-up points or any other method of pick-up shall be subject to approval by the Engineer.

CAST - IN - PLACE CONCRETE PILES

CAST - IN - PLACE CONCRETE PILES

Type of shell	Min. shell thickness	Pile Shell Specifications
Pipe	.164 in.	ASTM A252 – 50,000 psi min. Ult.
Fluted	9 guage	SAE 1010 or 1015 - 50,000 psi min. Ult.
Mandrel Driven	18 guage	Manufacturer's standard sheet steel.

PRECAST CONCRETE PILES

Pile Size	No. of Bars & Size	Approx. Wt. per Lin. Ft.	Area of nominal cross-sect	Max. Length L for 1 point pick-up	Max. Length L for 2 point pick-up
14"	4 - #8	205#	196 □"	44'	66'
16"	4 - #9	265	256	46	70
18"	8 - #7	335	324	49	74

PRECAST CONCRETE PILES

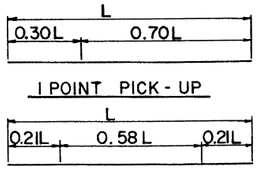

NO	DESCRIPTION OF REVISIONS	MADE BY	DATE
1	Chg. conc. class	WEB	2-82
2			
3			

DESIGN	CAG	1-73
DRAWN	WO	3-73
CHECKED		

DESIGN APPROVED R.C. Brechler

APPROVED FOR DISTRIBUTION F. Stanelin

ARIZONA
DEPARTMENT OF TRANSPORTATION
HIGHWAYS DIVISION
STANDARD DRAWINGS

PRECAST AND CAST-IN-PLACE
CONCRETE PILES

REVISION

STANDARD NO. B-20.10

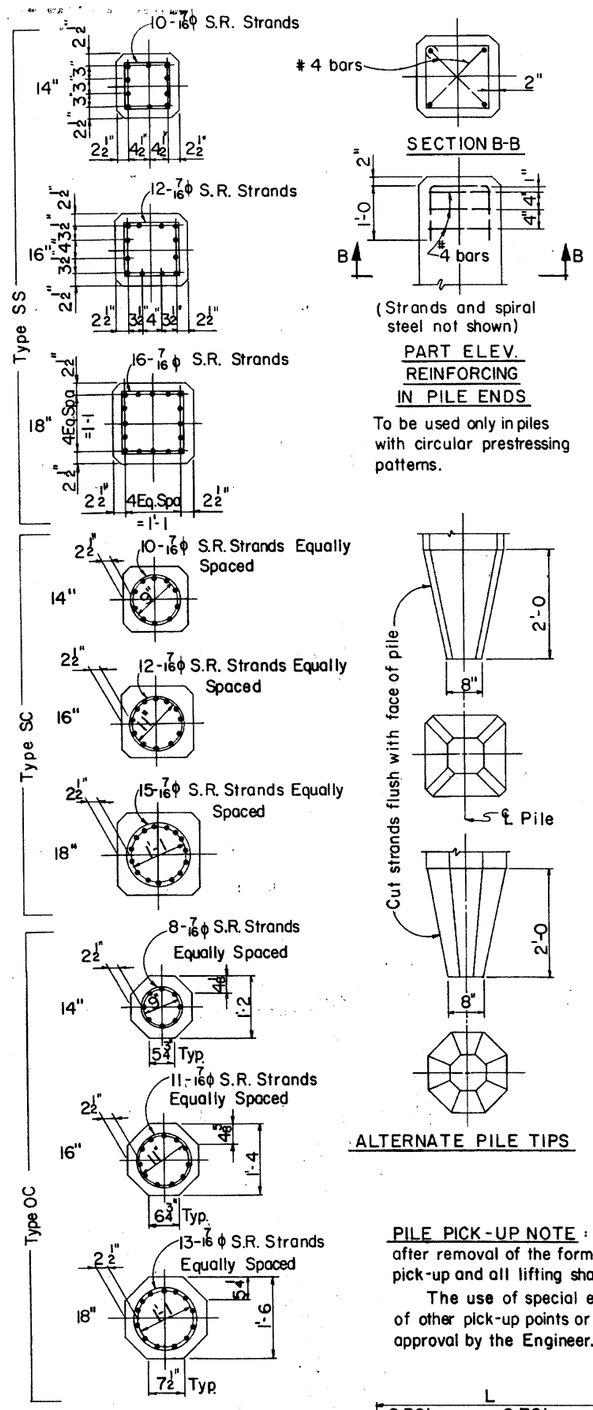

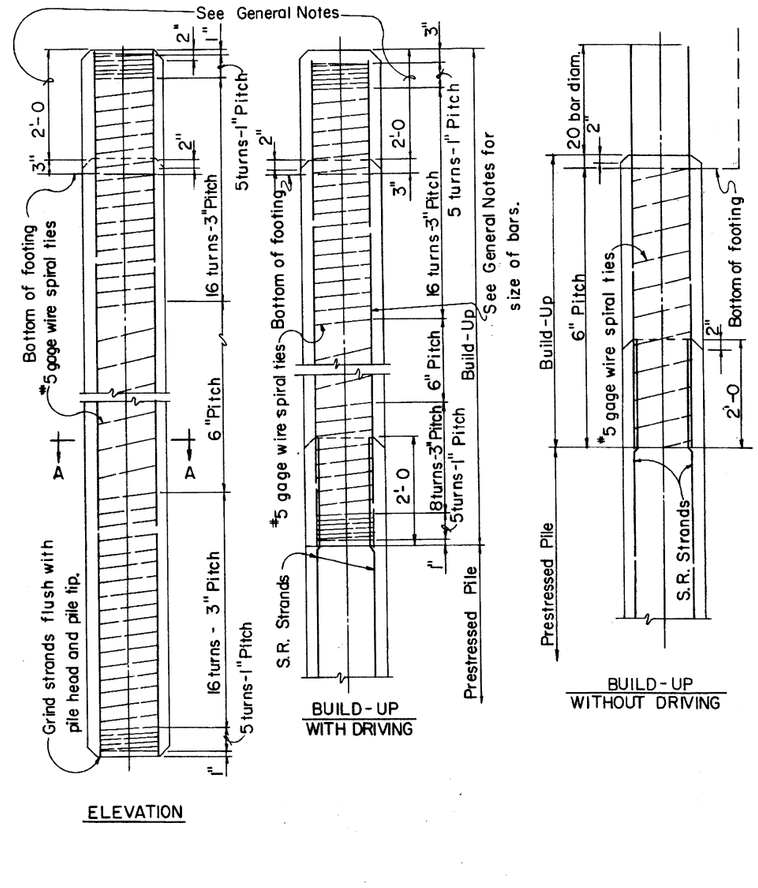

GENERAL NOTES

DESIGN -AASHTO Standard Specifications For Highway Bridges 1977.

CONSTRUCTION- Standard Specifications of the Ariz. Dept. of Transportation Edition 1982. All construction Specifications for precast concrete piling shall apply except as otherwise noted here.

CONCRETE- Concrete in the prestressed pile shall be Class S and shall have a minimum compressive cylinder strength ($f'c$) of 5000 psi at 28 days. Compressive cylinder strength at transfer of prestressing force shall be not less than 4000 psi. Piles may be removed from casting bed to nearby storage anytime after transfer of stress. Shipment from plant site or driving will not be permitted until full compressive cylinder strength is reached. Concrete in Build-Ups shall be Class 'S' internally vibrated having a minimum compressive cylinder strength ($f'c$) of 2800 psi at 28 days. Build-Ups with driving shall have reached full compressive cylinder strength before driving starts.

MILD STEEL REINFORCING- Spiral reinforcement shall be cold drawn wire conforming to ASTM, A-82. All other mild reinforcement shall be in accordance with ASTM, A-615 Grade 40.

PRESTRESSING REINFORCING - Seven-wire stress relieved strand conforming to the requirements of ASTM, A-416 shall be used. In general the unit prestress after losses shall not exceed $0.2f'c$. Initial tension in strands before release shall be as follows:

3/8"φ Strands - 14,000#
7/16"φ Strands - 18,900#
1/2"φ Strands - 25,200#

The unit prestress after losses shall be not less than 700 psi.

TOLERANCES- Pile ends shall be plane surfaces and perpendicular to axis of pile. The maximum sweep (deviation from straightness measured along two perpendicular faces of the pile, while not subject to bending forces) shall not exceed 1/8" in any 10' of its length, 3/8" in any 40' or 3/16" x (total length in ft.) ÷ 20 feet.

BUILD-UPS- Build-ups as detailed may be used only if specified or authorized by the Engineer. Attachment of the build-up to the pile shall be by the same methods given for pile heads except that edges need not be beveled. If the joint is subject to conditions which would cause deterioration, suitable steps satisfactory to the Engineer shall be taken to protect the joint. The minimum area of vertical reinforcing steel shall be 1-1/2% of the gross cross-section of concrete. Bars shall be placed in a symmetrical pattern of not less than four bars.

PILE HEADS- Prestressed piles shall be cast 2'-0 longer than net required length. After driving to a depth satisfactory to the Engineer the excess length shall be cut off on a plane normal to the axis of the pile and the pile edges beveled. Prestressing strands shall be cut off to provide 2'-0 embedment into cap, footing or build-up. Any concrete at the pile head damaged below cut off elevation in driving shall be removed to solid material and built-up to cut off elevation. If the pile head is a built-up section, it shall be trimmed same as a pre-stressed section and the vertical bars cut off to provide 20 diameters embedment into the cap or footing.

FORMS- The use of steel forms on concrete founded casting beds is required unless otherwise approved in advance by the Engineer. Outer forms shall enclose all except top horizontal surface. The side forms may have a maximum draft on each side not exceeding 1/4" per foot. All corners shall be chamfered to 1-1/2" or rounded to 2" radius. Forms for piles shall be such as to avoid the formation of fins at intersection of surfaces. Top of concrete casting shall be given a uniformly smooth finish to match the finish surface of the formed sides.

PILE PICK-UP NOTE: Pick-up points shall be plainly marked on all piles after removal of the forms unless special lifting devices are attached for pick-up and all lifting shall be done at these points.

The use of special embedded or attached lifting devices, the employment of other pick-up points or any other method of pick-up shall be subject to approval by the Engineer.

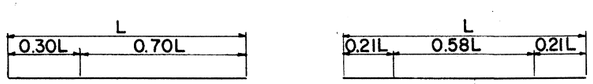

1 POINT PICK-UP

2 POINT PICK-UP

SQUARE PILE PROPERTIES

Pile Size	No. and size of S.R. Strands		Unit Prestress after losses		Approx. Wt. per Lin. Ft.	Area of nominal cross-section	Section modulus of cross-section	Max. Lgth "L"* 1 Point Pick-Up		Max Lgth "L"* 2 Point Pick-Up	
	Square Pattern	Circular Pattern	Square Pattern	Circular Pattern				Square Pattern	Circular Pattern	Square Pattern	Circular Pattern
14	10-7/16φ	10-7/16φ	771psi	771psi	205*	196 in²	457 in³	57'	57'	82'	82'
16	12-7/16φ	12-7/16φ	709	709	265	256	683	60	60	85	85
18	16-7/16φ	15-7/16φ	747	700	335	324	972	64	63	92	90

*The length "L" is the distance end to end of pile including alternate pile tip used. Tabulated lengths may be used for minimum pick-up lengths when the concrete has attained a compressive cylinder strength of 5,000 psi. If piles are picked up when the concrete strength is less than 5,000 psi, the maximum pick-up length shall be the tabulated length reduced by 3%.

OCTAGON PILE PROPERTIES

Pile Size	No. & size of S.R. Strands	Unit Pre-stress after losses	Approx. Wt. per Lin. Ft.	Area of nominal cross sect.	Section modulus of cross sect.	Max. lgth "L"* 1 point pick-up	Max. lgth "L"* 2 point pick-up
14	8-7/16φ	747 psi	170#	162 φ"	301 in³	50'	72'
16	11-7/16φ	785	220	212	449	55	78
18	13-7/16φ	733	280	268	639	57	81

NO.	DESCRIPTION OF REVISIONS	MADE BY	DATE
1	Changed Notes	WEB	12-82
2			
3			

DESIGN	CAG	1-73
DRAWN	WO	3-73
CHECKED		

DESIGN APPROVED R.C. Brechler

APPROVED FOR DISTRIBUTION E. Stendlin

ARIZONA DEPARTMENT OF TRANSPORTATION HIGHWAYS DIVISION STANDARD DRAWINGS

PRESTRESSED CONCRETE PILES

REVISION

STANDARD NO. B-20.20

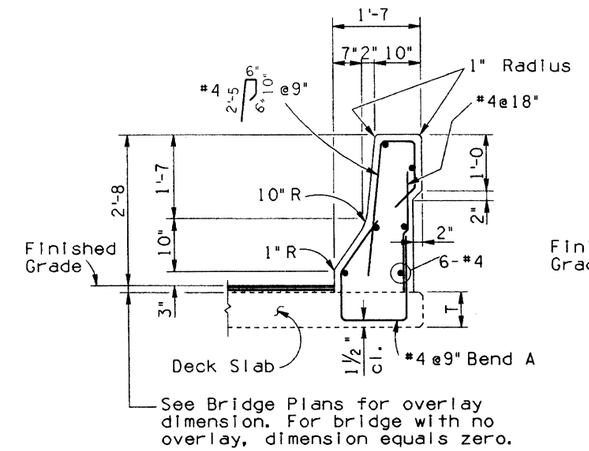

TYPE A

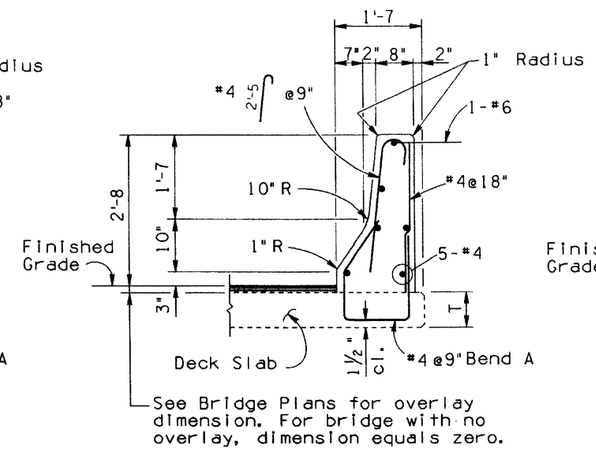

TYPE B

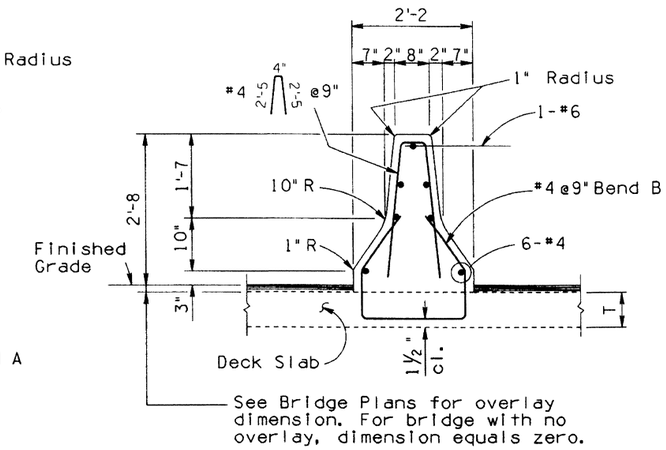

TYPE C

GENERAL NOTES:

Construction Specification - Arizona Department of Transportation Standard Specifications for Road and Bridge Construction, latest Edition.

Design Specifications - AASHTO Standard Specifications for Highway Bridges, Edition of 1989 and 1990 through 1991 Interim Specifications.

All concrete shall be Class "S" (f'c=3000 psi).

Reinforcing steel shall conform to ASTM Specification A615. Bar sizes #6 and smaller shall be designed as Grade 40 but may be furnished as Grade 40 or Grade 60. (fs=20,000 psi).

All bend dimensions for reinforcing steel shall be out-to-out of bars. All placement dimensions for reinforcing steel shall be to center of bars unless noted otherwise.

All reinforcing steel shall have 2 inch clear cover unless noted otherwise.

Dimensions shall not be scaled from drawings.

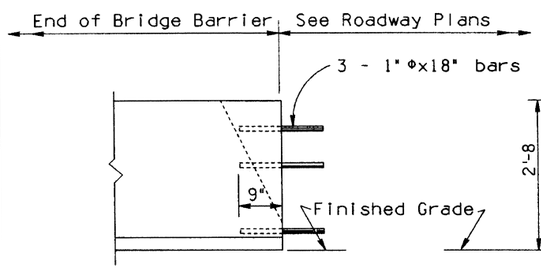

ROADWAY ELEVATION

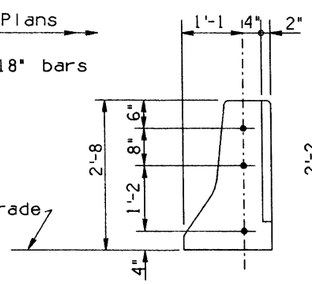

END VIEW

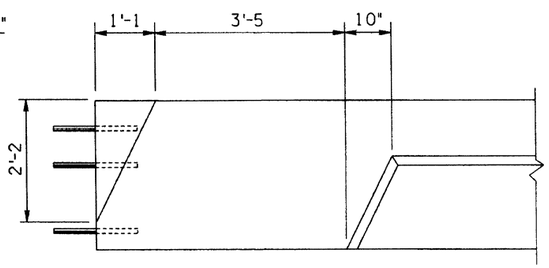

FASCIA ELEVATION

DETAIL A

(Use with Barrier Detail Type A)

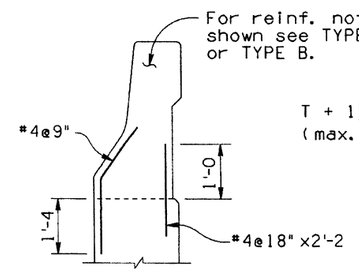

REINF. AT WINGWALL OR RETAINING WALL

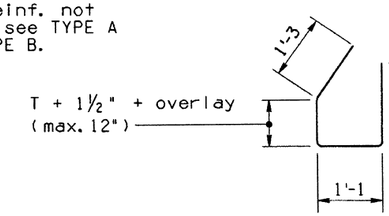

BEND A

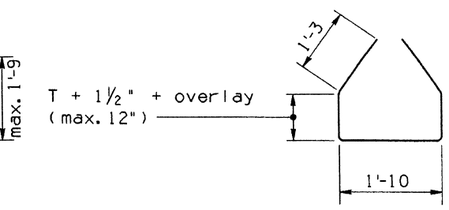

BEND B

NOTE:
Details A, B and C show end treatment of concrete barriers and are to be used unless other end treatment is called for on plans.

APPROXIMATE QUANTITIES		
Barrier Type	Class "S" Conc. f'c=3000 psi C.Y.	Reinf. Steel Lbs.
A	0.0985	8.995
B	0.0918	8.758
C	0.1178	10.312

NOTE:
Quantities are per lineal foot with no overlay. Reinforcing bars embedded in deck slab are not included in Reinforcing Steel Quantity.

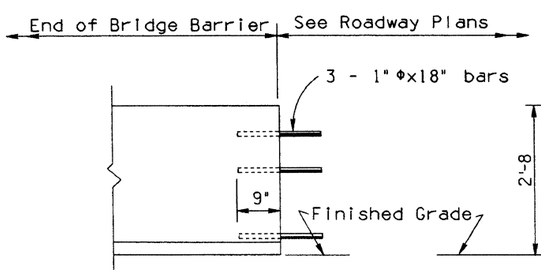

ELEVATION

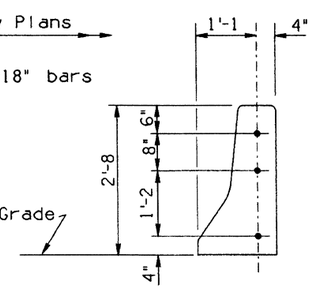

END VIEW

DETAIL B

(Use with Barrier Detail Type B)

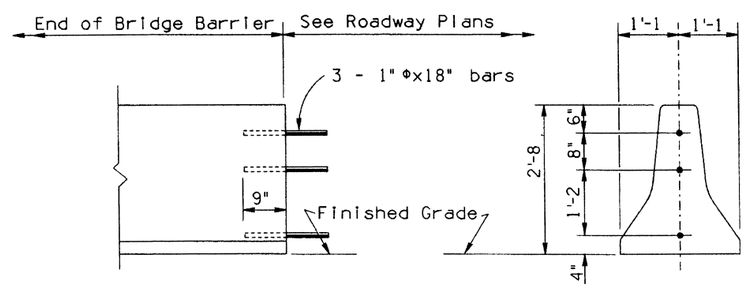

ELEVATION

END VIEW

DETAIL C

(Use with Barrier Detail Type C)

NO	DESCRIPTION OF REVISIONS	MADE BY	DATE
1	Miscellaneous Revisions	J.N.	4-92
2			
3			
4			

DESIGN
DRAWN
CHECKED

DESIGN APPROVED

APPROVED FOR DISTRIBUTION

ARIZONA
DEPARTMENT OF TRANSPORTATION
HIGHWAYS DIVISION
STANDARD DRAWINGS

BRIDGE CONCRETE BARRIER DETAILS

REVISION 4-92

STANDARD NO. B-21.18

ZF1:(0510201SB2118.DGN;2
08-MAY-1992 15:42
VIEW NAME:

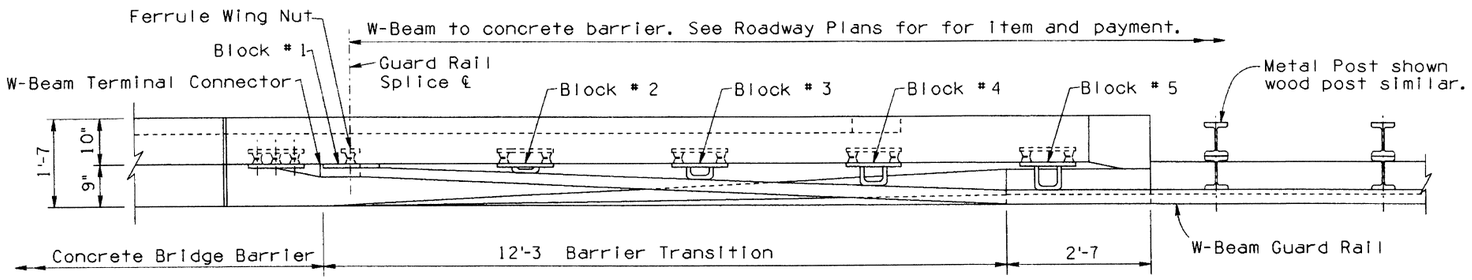

PLAN

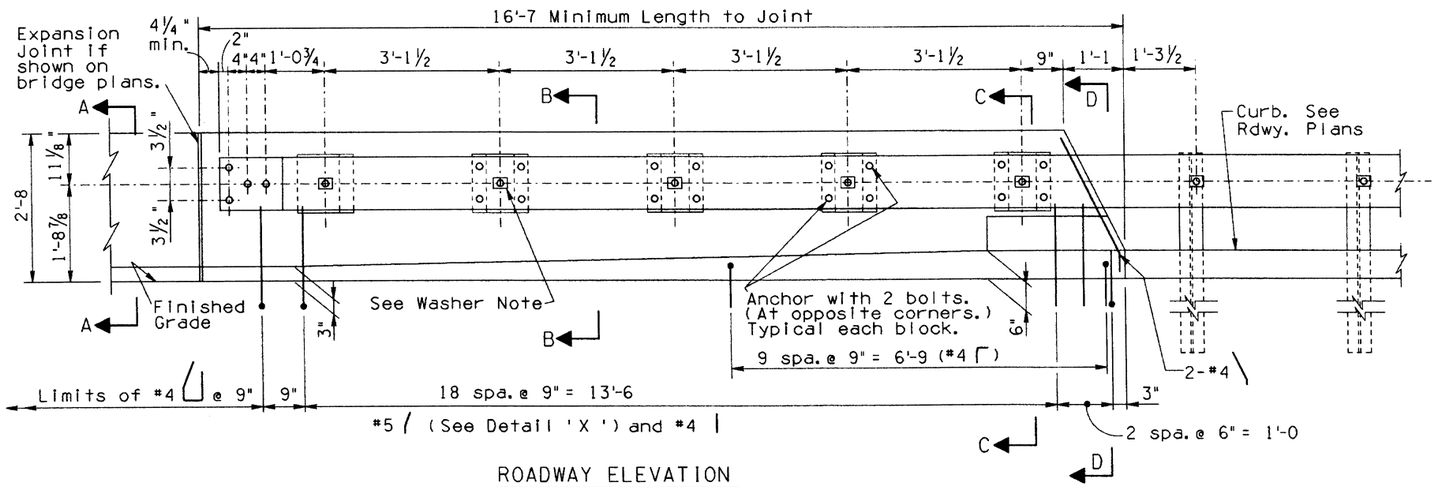

ROADWAY ELEVATION

GENERAL NOTES:

Construction Specification - Arizona Department of Transportation Standard Specifications Road and Bridge Construction, latest Edition.

Design Specifications - AASHTO Standard Specifications for Highway Bridges, Edition of 1989 and 1990 through 1991 Interim Specifications.

All concrete shall be Class S, f'c = 3000 psi.

Reinforcing Steel shall conform to ASTM Specification A615. Bar size #6 and smaller are designed as grade 40 and furnished as Grade 40 or Grade 60, fs = 20,000 psi.

All bend dimensions for reinforcing steel shall be out-to-out of bars. All placement dimensions for reinforcing steel shall be to center of bars unless noted otherwise.

All reinforcing steel shall have 2" clear cover unless noted otherwise.

Structural Steel shall conform to ASTM Specification A36 unless noted otherwise.

The terminal connectors and blocks shall be galvanized after fabrication in accordance with ASTM Spec. A123.

Bolts and washers shall be galvanized or, at the contractors option, stainless steel bolts and washers may be used. They shall conform to or exceed the mechanical requirements of ASTM A307.

Terminal connectors, blocks and hardware shall be furnished and installed with roadway approach guard rail.

Insert assemblies shall be placed in new construction.

Ferrules shall be made from steel meeting the requirements of ASTM A108, grade 12 L 14.

Wire struts shown in the insert assembly shall have a minimum tensile strength of 100,000 psi.

The insert assembly shall be assembled in the shop. Bolt threads may be re-cut as necessary to insure fit.

The bridge quantities include all concrete and reinforcing steel for barrier transitions.

The cost of the insert assembly will consist of the insert assembly, bolts and washers complete in place and shall be included in the unit price bid for barrier concrete.

See Std. B-21.21 for Terminal Connector Anchor Assembly, Ferrule Wing Nut and Block Details.

Dimensions shall not be scaled from drawings.

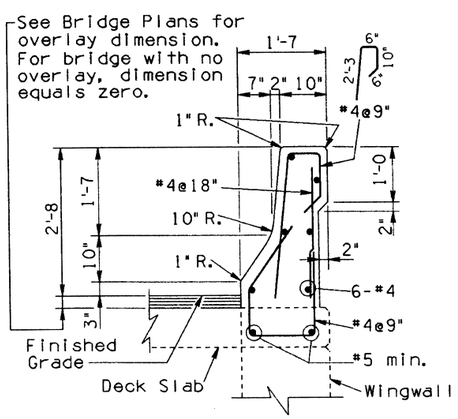

SECTION A-A

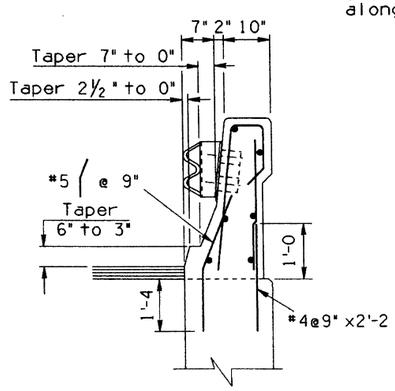

SECTION B-B

Washer Note:

Rectangular Plate Washer (ARTBA designation) required under head of five bolts along concrete transition.

NOTE:

Quantities are for one transition 16'-7 in length with no overlay. Reinf. bars embedded in deck slab or wingwall are not included in Reinf. Steel Quantity.

APPROXIMATE QUANTITIES	
Class 's' Concrete	1.593 C.Y.
Reinforcing Steel	146 Lbs.

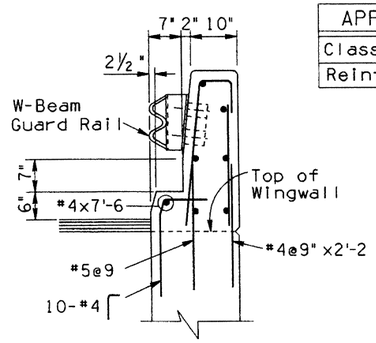

SECTION C-C

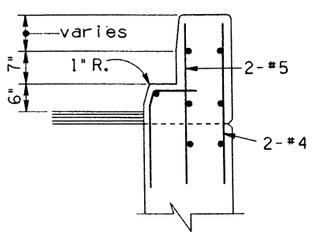

SECTION D-D

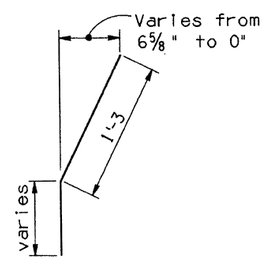

DETAIL 'X'

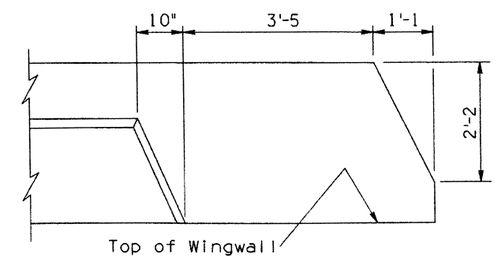

FASCIA ELEVATION

Showing treatment at end of barrier

NO	DESCRIPTION OF REVISIONS	MADE BY	DATE
1	Revised barrier to W W Reinf.	J.M.	4-92
2			
3			
4			

DESIGN
DRAWN
CHECKED

Registered Professional Engineer (Civil) CERTIFICATE NO. 9910 F. DANIEL DAVIS Date Signed 5-8-92 Arizona U.S.A.

DESIGN APPROVED — F. Daniel Davis

APPROVED FOR DISTRIBUTION — August W. Hantz

ARIZONA
DEPARTMENT OF TRANSPORTATION
HIGHWAYS DIVISION
STANDARD DRAWINGS

BRIDGE
CONCRETE BARRIER TRANSITION WITH CURB

REVISION 4-92

STANDARD NO. B-21.19

ZF1:(0518205B2119.DGN;3 VIEW NAME:
08-MAY-1992 15:45

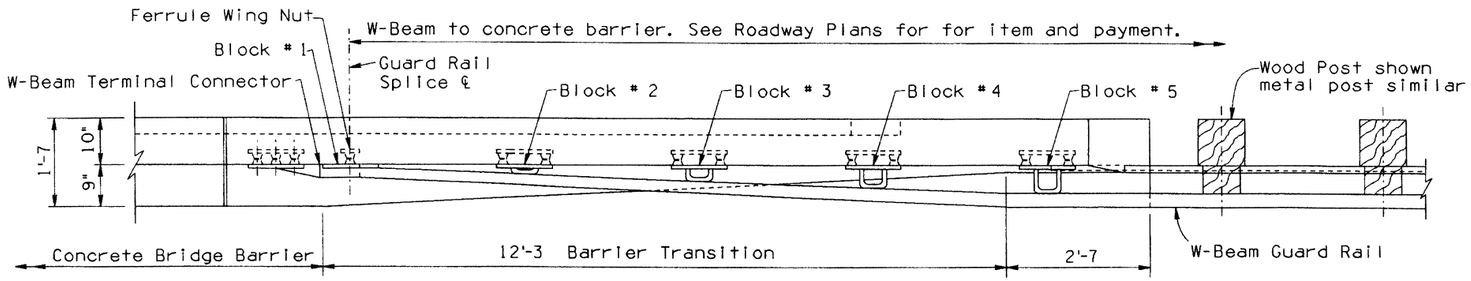

PLAN

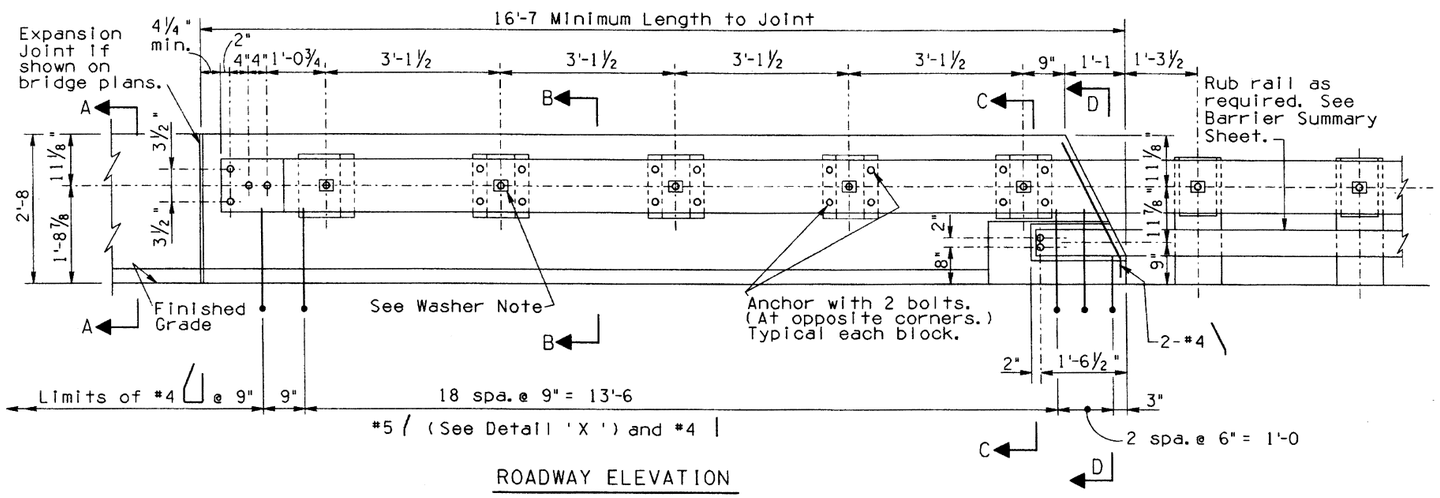

ROADWAY ELEVATION

GENERAL NOTES:

Construction Specification - Arizona Department of Transportation Standard Specifications Road and Bridge Construction, latest Edition.

Design Specifications - AASHTO Standard Specifications for Highway Bridges, Edition of 1989 and 1990 through 1991 Interim Specifications.

All concrete shall be Class S, f'c = 3000 psi.

Reinforcing Steel shall conform to ASTM Specification A615. Bar size #6 and smaller are designed as grade 40 and furnished as Grade 40 or Grade 60, fs = 20,000 psi.

All bend dimensions for reinforcing steel shall be out-to-out of bars. All placement dimensions for reinforcing steel shall be to center of bars unless noted otherwise.

All reinforcing steel shall have 2" clear cover unless noted otherwise.

Structural Steel shall conform to ASTM Specification A36 unless noted otherwise.

The terminal connectors and blocks shall be galvanized after fabrication in accordance with ASTM Spec. A123.

Bolts and washers shall be galvanized or, at the contractors option, stainless steel bolts and washers may be used. They shall conform to or exceed the mechanical requirements of ASTM A307.

Terminal connectors, blocks and hardware shall be furnished and installed with roadway approach guard rail.

Insert assemblies shall be placed in new construction.

Ferrules shall be made from steel meeting the requirements of ASTM A108, grade 12 L 14.

Wire struts shown in the insert assembly shall have a minimum tensile strength of 100,000 psi.

The insert assembly shall be assembled in the shop. Bolt threads may be re-cut as necessary to insure fit.

The bridge quantities include all concrete and reinforcing steel for barrier transitions.

The cost of the insert assembly will consist of the insert assembly, bolts and washers complete in place and shall be included in the unit price bid for barrier concrete.

See Std. B-21.21 for Terminal Connector Anchor Assembly, Ferrule Wing Nut and Block Details.

Dimensions shall not be scaled from drawings.

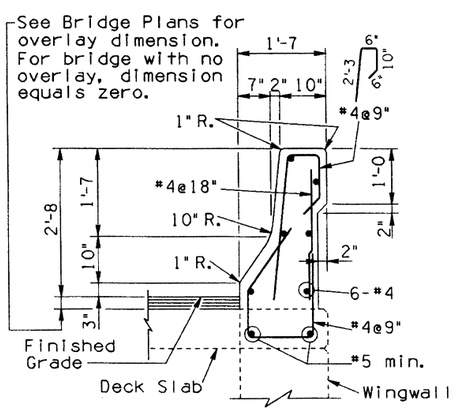

SECTION A-A

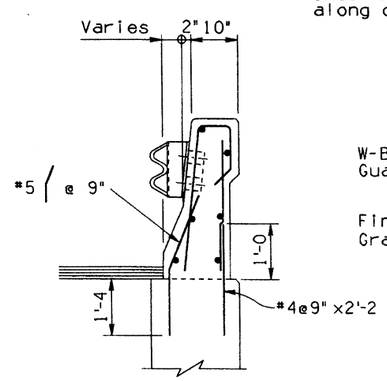

SECTION B-B

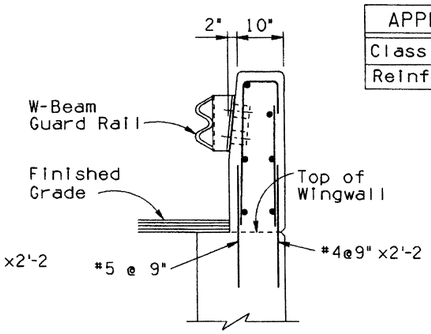

SECTION C-C

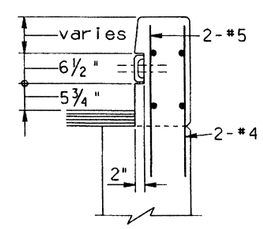

SECTION D-D

Washer Note:

Rectangular Plate Washer (ARTBA designation) required under head of five bolts along concrete transition.

NOTE:

Quantities are for one transition 16'-7 in length with no overlay. Reinf. bars embedded in deck slab or wingwall are not included in Reinf. Steel Quantity.

APPROXIMATE QUANTITIES	
Class 's' Concrete	1.516 C.Y.
Reinforcing Steel	141 Lbs.

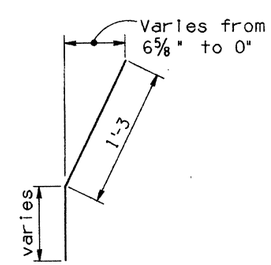

DETAIL 'X'

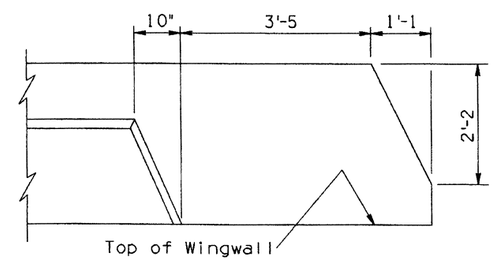

FASCIA ELEVATION

Showing treatment at end of barrier

DESIGN APPROVED	ARIZONA DEPARTMENT OF TRANSPORTATION HIGHWAYS DIVISION STANDARD DRAWINGS	REVISION 4-92
APPROVED FOR DISTRIBUTION	BRIDGE CONCRETE BARRIER TRANSITION	STANDARD NO. B-21.20

NO	DESCRIPTION OF REVISIONS	MADE BY	DATE
1	Revised barrier to W W Reinf.	J.M.	4-92
2			
3			
4			

DESIGN
DRAWN
CHECKED

ZFL(0510203SB2120.DGN;3 VIEW NAME:
08-MAY-1992 15:46

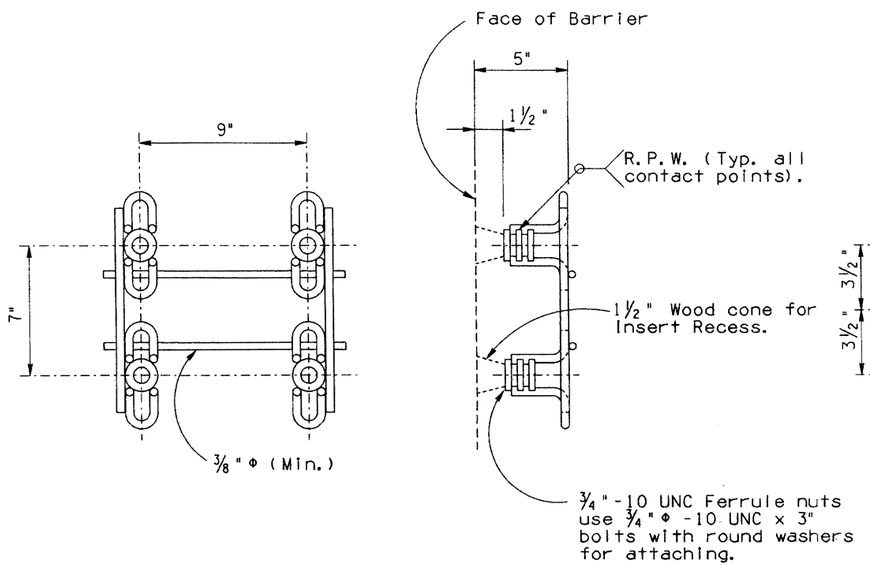

BLOCK ANCHOR ASSEMBLY

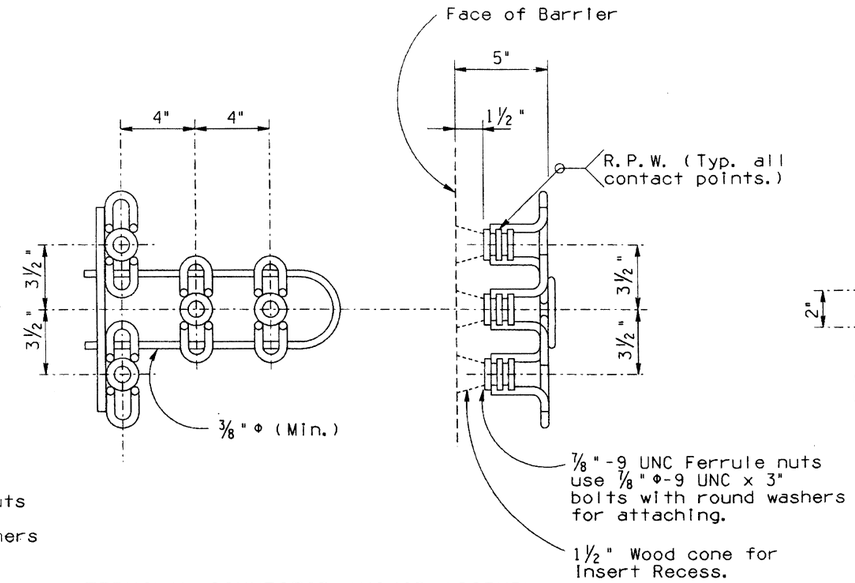

TERMINAL CONNECTOR ANCHOR ASSEMBLY

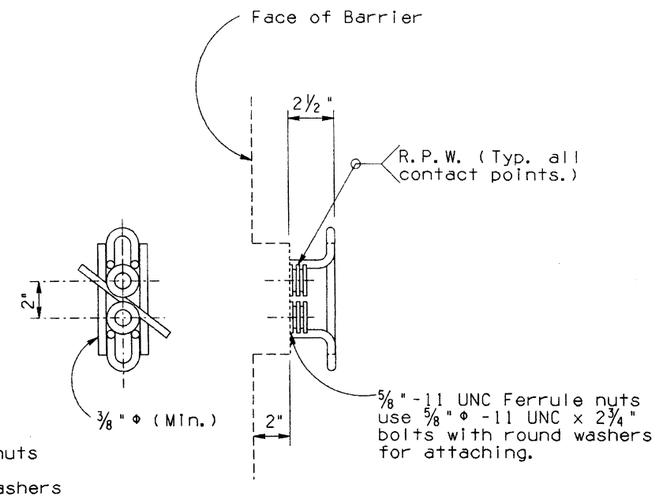

RUB RAIL
TERMINAL ANCHOR

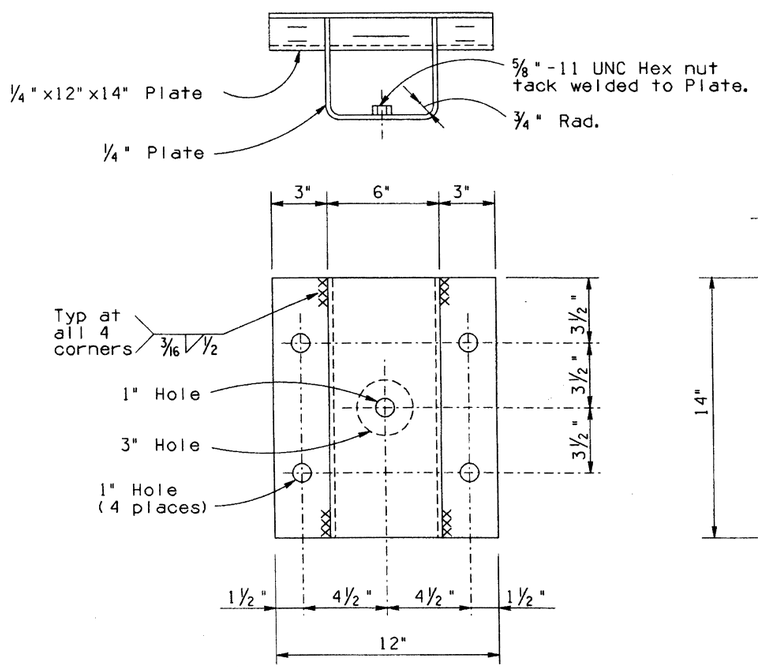

BLOCK DETAILS

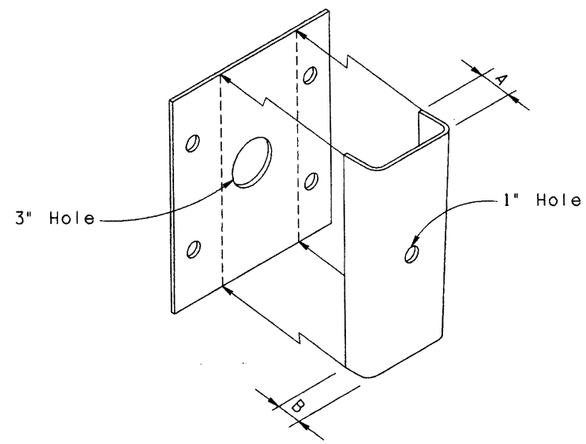

DIMENSIONS		
Block #	A	B
2	1¼"	⅞"
3	2½"	1¾"
4	3 11/16"	2⅝"
5	4 15/16"	3 7/16"

NOTE:
Block #1 is a Plate 12"x¼"x14"

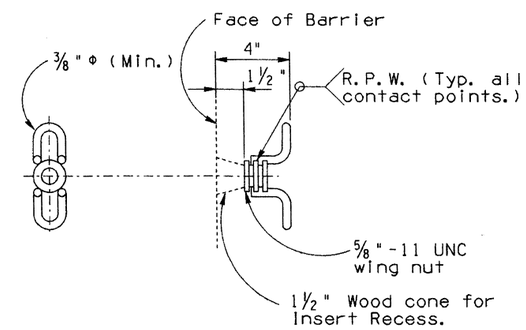

FERRULE WING NUT DETAIL

NO	DESCRIPTION OF REVISIONS	MADE BY	DATE
1	Revised bolt length.	C.H.	4-92
2			
3			
4			

DESIGN
DRAWN
CHECKED

Registered Professional Engineer (Civil) CERTIFICATE NO. 5910 F. DANIEL DAVIS Date Signed 5-8-92 Arizona U.S.A.	DESIGN APPROVED	ARIZONA DEPARTMENT OF TRANSPORTATION HIGHWAYS DIVISION STANDARD DRAWINGS	REVISION 4-92
	APPROVED FOR DISTRIBUTION	BLOCK AND TERMINAL CONNECTOR ASSEMBLY DETAILS	STANDARD NO. B-21.21

ZF1:[051020]SB2121.DGN;2 VIEW NAME: BR
08-MAY-1992 15:48

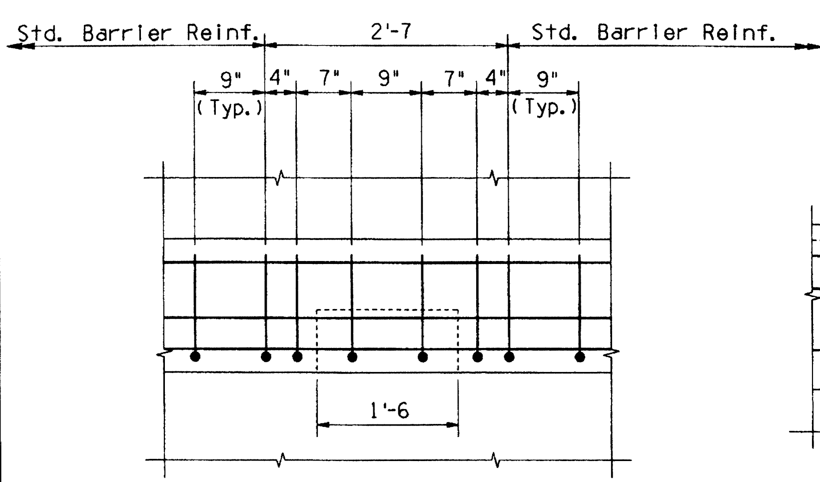

PLAN

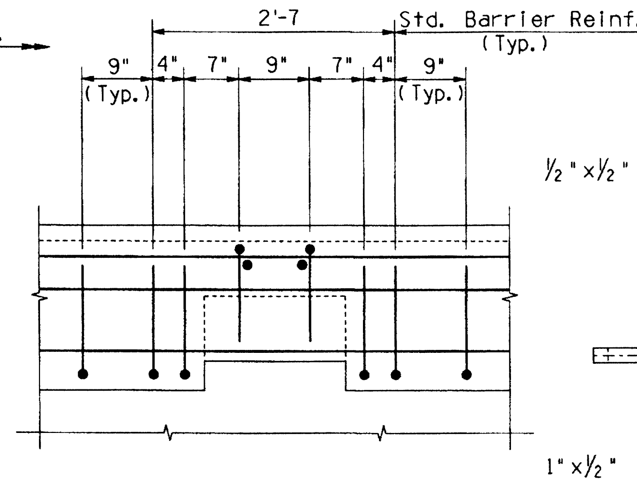

PLAN

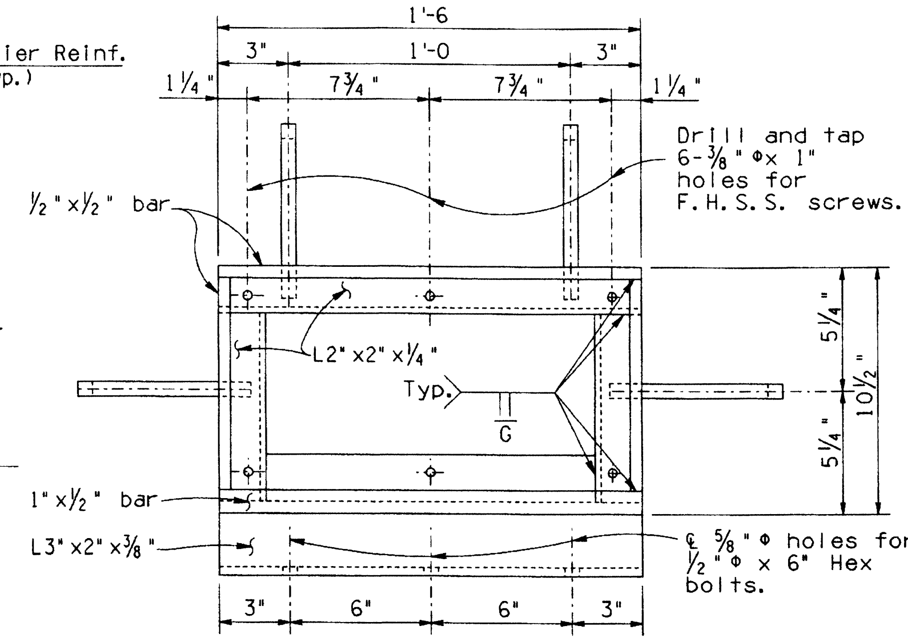

JUNCTION BOX FRAME

GENERAL NOTES:

Structural steel shall conform to ASTM specification A36 unless noted otherwise (fs = 20,000 psi).

All welding shall conform to the requirements of the American Welding Society, ANSI/AASHTO/AWS D1.5-88 Bridge Welding Code.

All bolts shall conform to ASTM Specification A307. All bolts, nuts and washers shall be galavanized in accordance with the requirements of ASTM A153. All other steel shall be galvanized after fabrication in accordance with ASTM A123.

Chamfer all the bottom edges of the Junction Box Cover plate 1/8" x 45°.

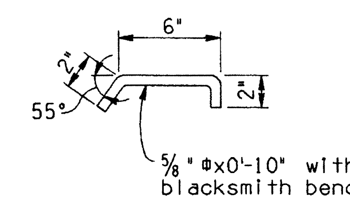

BAR BEND

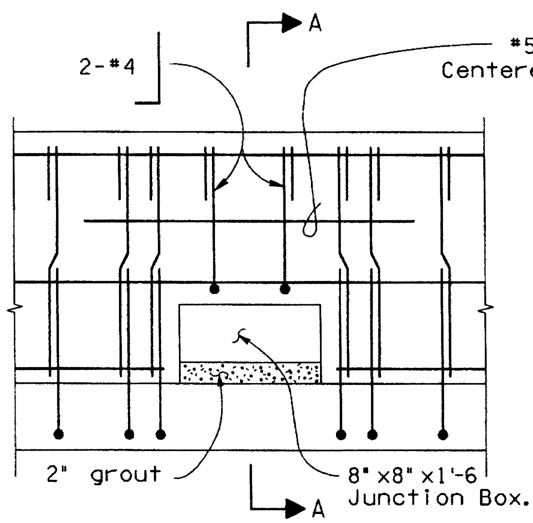

ELEVATION
(Showing back face Reinf.)

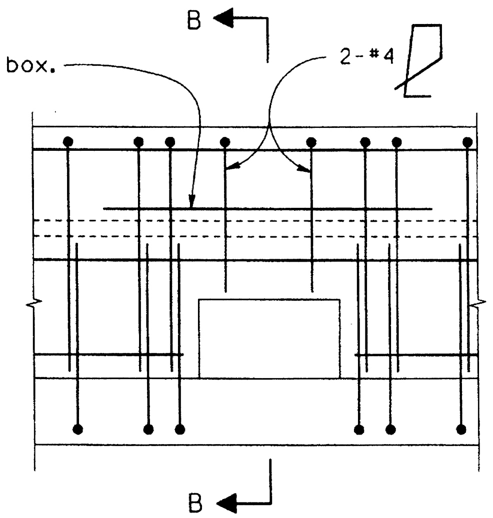

ELEVATION
(Showing front face Reinf.)

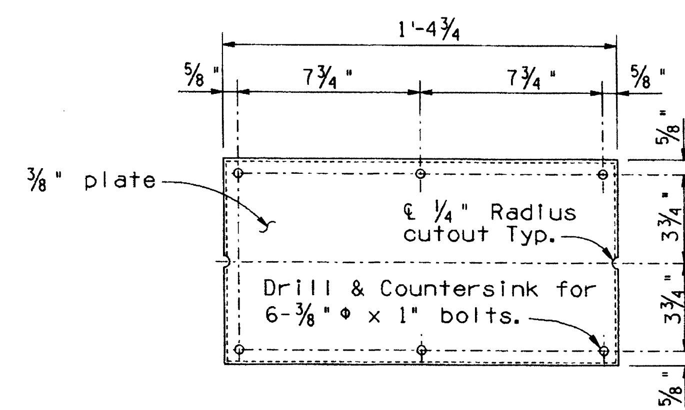

JCT. BOX COVER PLATE

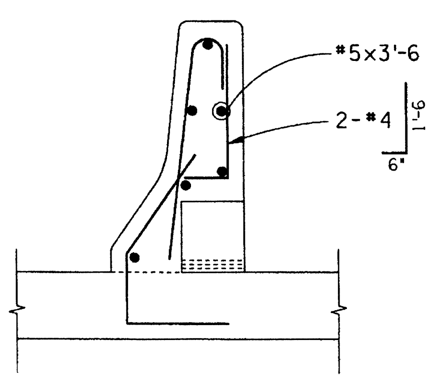

SECTION A-A

TYPE I JUNCTION BOX

For concrete barrier dimensions and reinforcing details not shown See B-21.18, TYPE B.

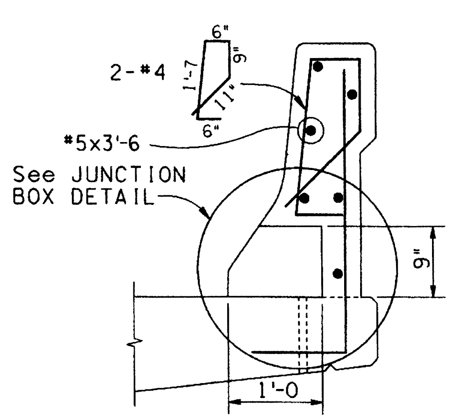

SECTION B-B

TYPE II JUNCTION BOX

For concrete barrier dimensions and reinforcing details not shown See B-21.18, TYPE A.

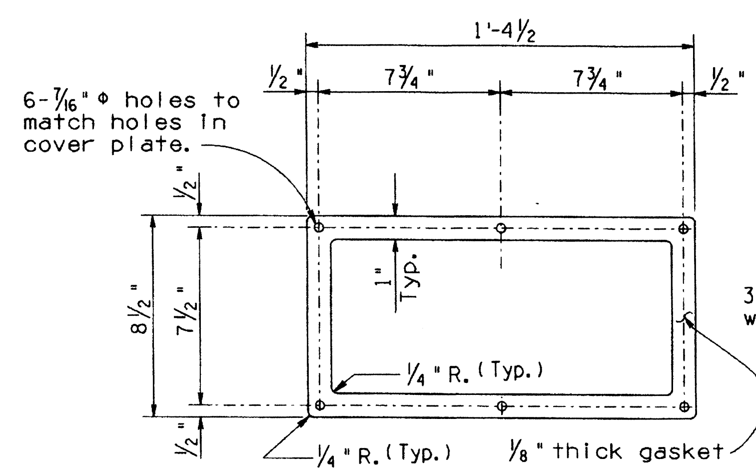

NEOPRENE GASKET

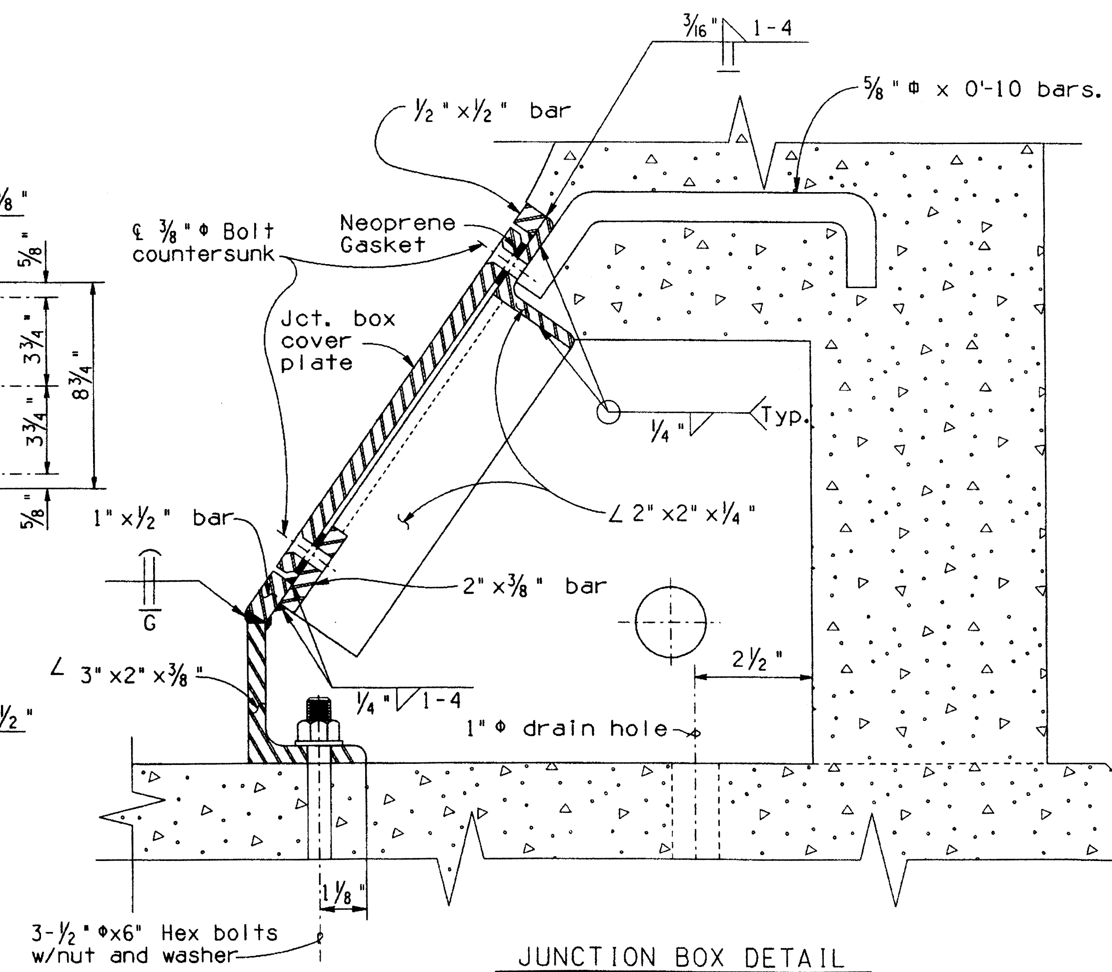

JUNCTION BOX DETAIL

DESIGN APPROVED	ARIZONA DEPARTMENT OF TRANSPORTATION HIGHWAYS DIVISION STANDARD DRAWINGS	REVISION
APPROVED FOR DISTRIBUTION	BARRIER JUNCTION BOX	STANDARD NO. B-21.30

Registered Professional Engineer (Civil) Certificate No. 9910 F. DANIEL DAVIS Date Signed 5-14-92 Arizona U.S.A.

			NO	DESCRIPTION OF REVISIONS	MADE BY	DATE
DESIGN	C.H.	4-92	1			
DRAWN	K.W.	4-92	2			
CHECKED			3			
			4			

ZF1:[051020]SB2130.DGN;1 VIEW NAME:
08-MAY-1992 15:50

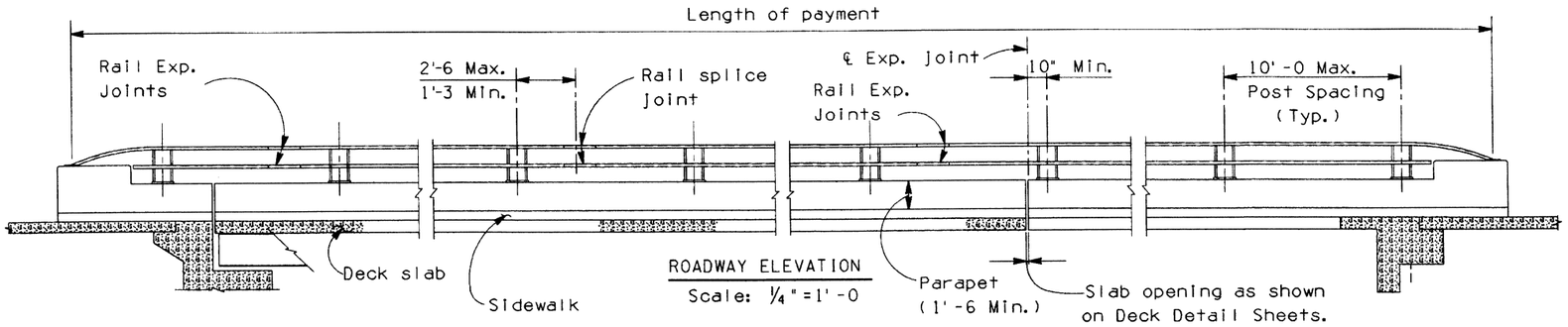

ROADWAY ELEVATION
Scale: 1/4" = 1'-0

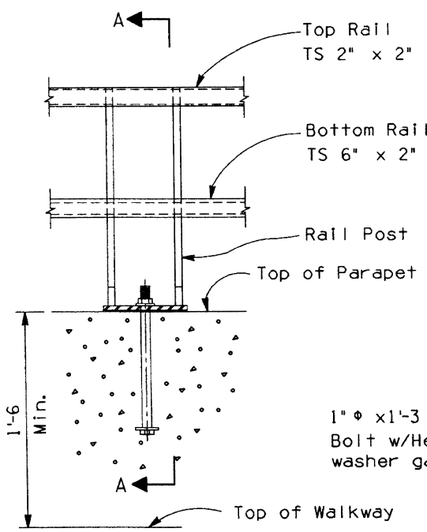

BRIDGE RAIL ELEVATION
Scale: 1 1/2" = 1'-0

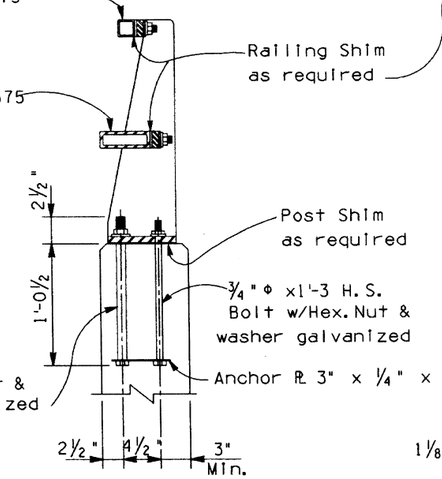

SECTION A-A
Scale: 1 1/2" = 1'-0

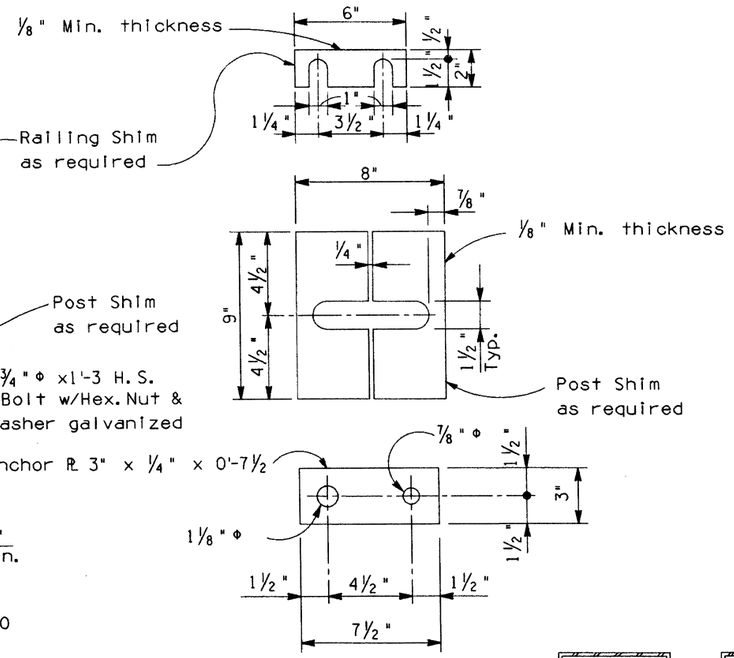

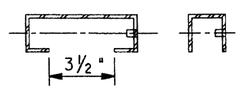

BOTTOM RAIL TOP RAIL

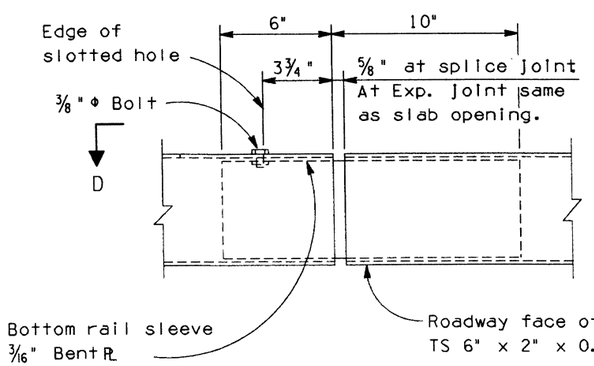

BOTTOM RAIL PLAN

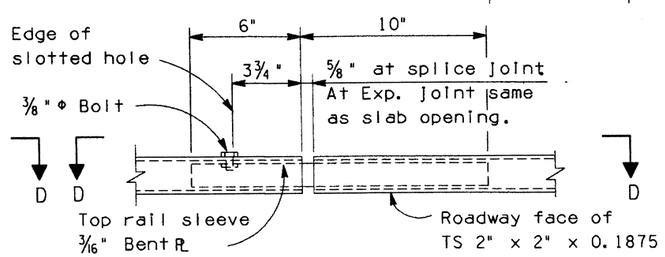

TOP RAIL PLAN

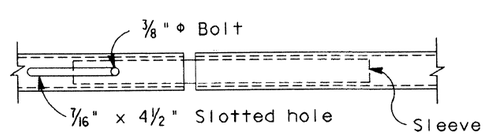

VIEW D-D

RAIL SPLICE DETAIL
Scale: 3" = 1'-0

1/2" Φ holes near & far side. Sleeve formed of 3/16" PL for sliding fit inside of rail tube.

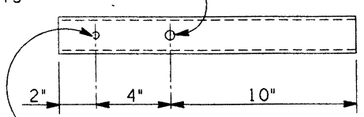

Drill hole and tack weld 3/8" nut inside of sleeve for 3/8" Hex. bolt with lock washer.

RAIL SPLICE SLEEVE DETAIL
Scale: 3" = 1'-0

MATERIAL

Materials for metal bridge rail shall be as follows:
Steel: All anchor plates, post construction and steel tubing shall be AASHTO M183 (ASTM A36) and shall be galvanized after fabrication in accordance with AASHTO M11 (ASTM A123).
Bolts: Anchor bolts, studs, nuts and washers shall be AASHTO M164 (ASTM A325). All exposed portions of assembly shall be galvanized in accordance with AASHTO M1 (ASTM A123).

GENERAL NOTES

Construction - Arizona Department of Trasportation Standard Specification for Road and Bridge Construction, latest Edition.
Design - AASHTO Standard Specification for Highway Bridges, Edition of 1983, and 1984 and 1985 Supplements.
All posts shall be normal to parapet.
Panel lengths of rail shall be continuous and attached to a minimum of two posts.
Rail splices shall be located at barrier rail joints, deck expansion joints and abutment expansion joints and shall be constructed as detailed.
Torque rail to post nuts to 175 ft. Lbs. (Exception - TS 2x2 Tube is wrench tight).
For spacing of rail posts, conctete dimensions and reinforcing steel, see Project Plans.
Dimensions shall not be scaled from drawings.
This Standard shall only be used in conjunction with a traffic barrier rail.

WELDING NOTE

Welding of Structural tubing shall conform to the requirements of the American Welding Society, Structural Welding Code, D1.1-80, as modified by the AASHTO Standard Specifications for Welding of Structural Steel Highway Bridges, 1981. All other welding shall conform to the requirements of the American Welding Society, Bridge Welding Code, D1.5-88.

NO	DESCRIPTION OF REVISIONS	MADE BY	DATE
1	Revised welding Note	J.M.	4-92
2			
3			
4			

DESIGN
DRAWN
CHECKED

CADD FILENAME= ZFA
VIEW NAME=

DESIGN APPROVED

APPROVED FOR DISTRIBUTION

ARIZONA
DEPARTMENT OF TRANSPORTATION
HIGHWAYS DIVISION
STANDARD DRAWINGS

BRIDGE PEDESTRIAN RAIL

REVISION 4-92

STANDARD NO. B-22.40

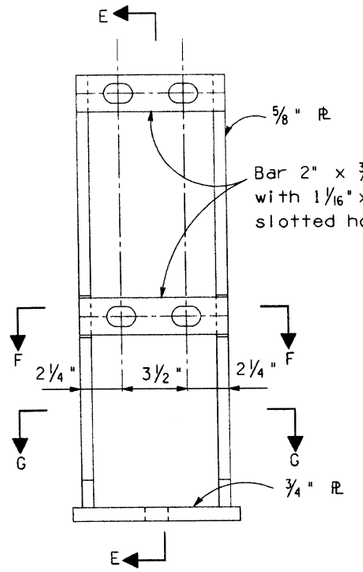

ELEVATION

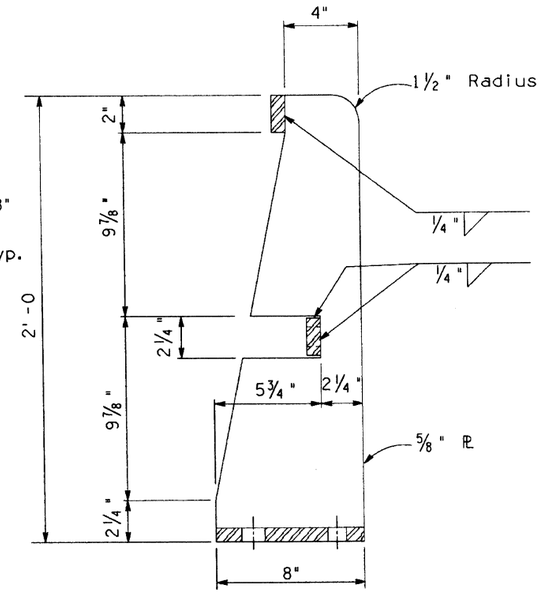

SECTION E-E

RAIL POST DETAILS
Scale: 3" = 1'-0

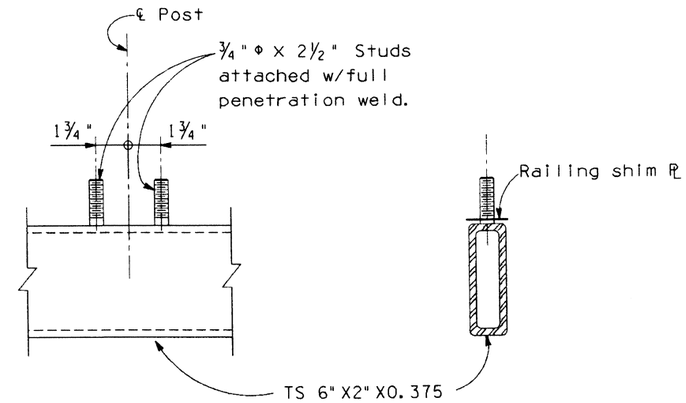

BOTTOM RAIL PLAN

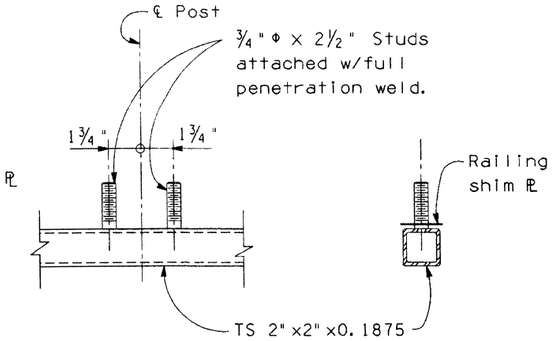

TOP RAIL PLAN

STUD BOLT DETAILS
Scale: 3" = 1'-0

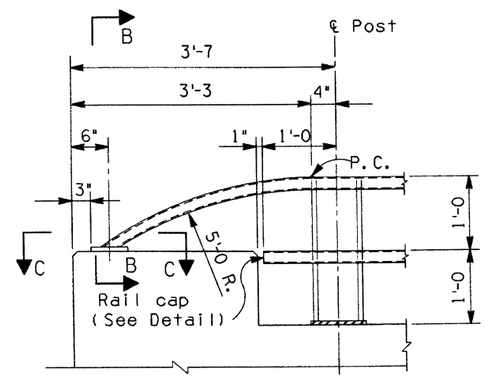

BRIDGE RAIL TERMINATION ELEVATION
Scale: 1" = 1'-0

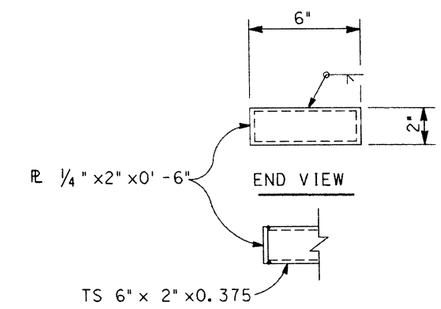

RAIL CAP
Scale: 3" = 1'-0

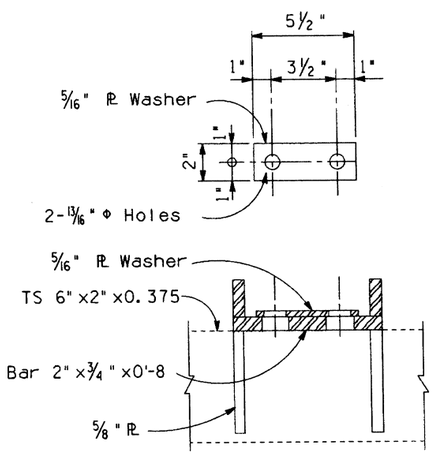

SECTION F-F
Scale: 3" = 1'-0

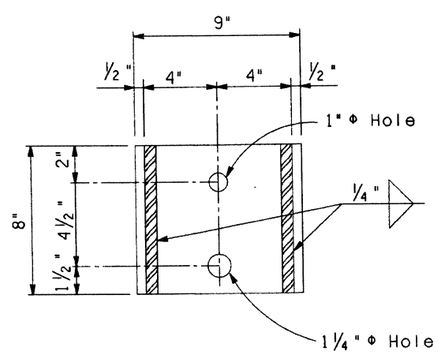

SECTION G-G
Scale: 3" = 1'-0

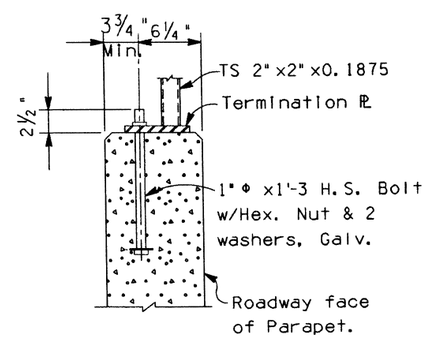

SECTION B-B
Scale = 1 1/2" = 1'-0

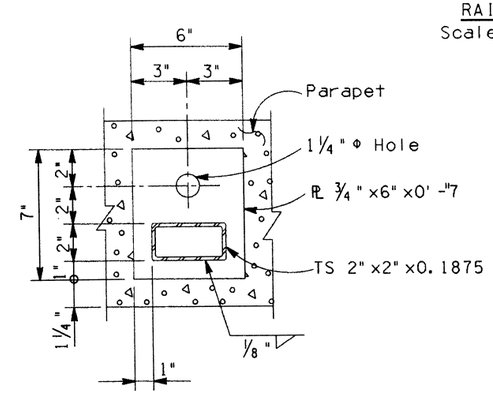

SECTION C-C
Scale: 3" = 1'-0

DESIGN		NO	DESCRIPTION OF REVISIONS	MADE BY	DATE
		1	Hole Size Section F-F	C. H.	4-92
		2			
		3			
		4			
DRAWN					
CHECKED					

CADD FILENAME= ZFA
VIEW NAME=

	DESIGN APPROVED	ARIZONA DEPARTMENT OF TRANSPORTATION HIGHWAYS DIVISION STANDARD DRAWINGS	REVISION 4-92
	APPROVED FOR DISTRIBUTION	BRIDGE PEDESTRIAN RAIL	STANDARD NO. B-22.41

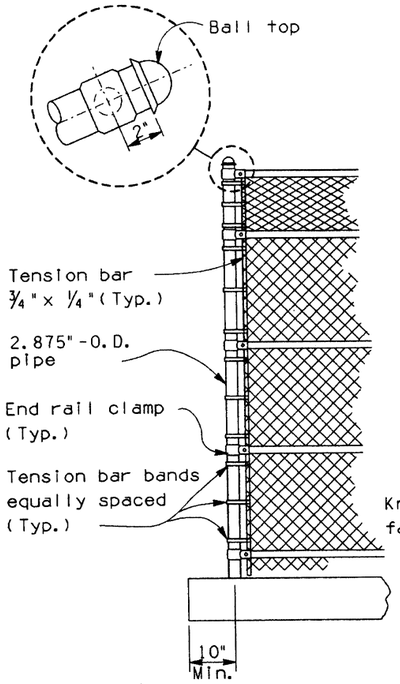

TYPICAL END POST ELEVATION

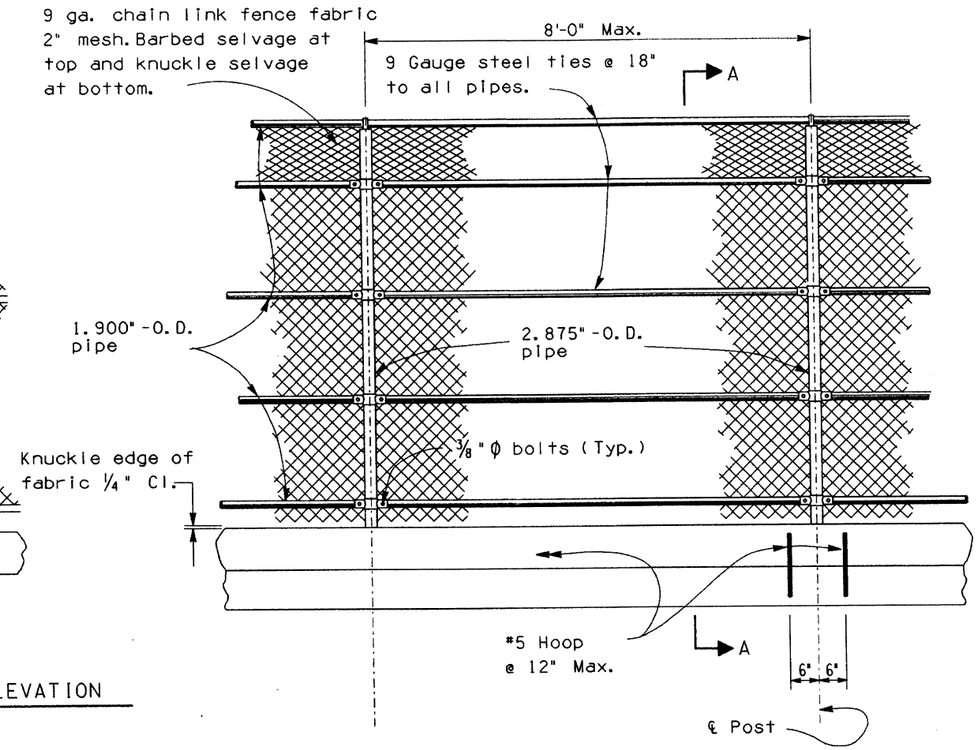

TYPICAL PANEL ELEVATION

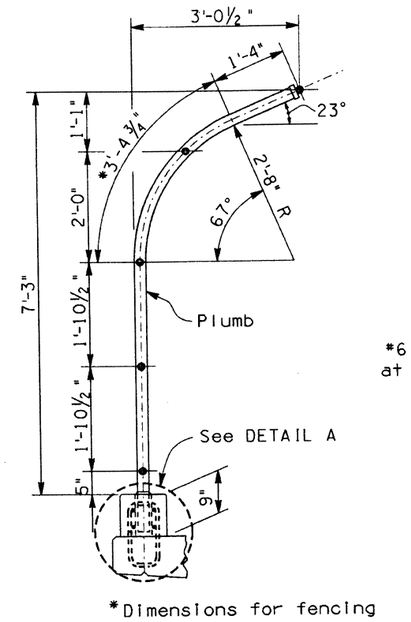

*Dimensions for fencing

SECTION A-A

(Typical interior post)

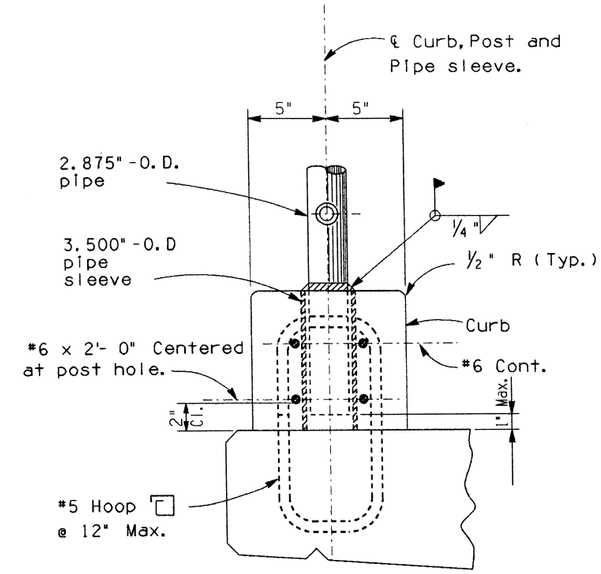

DETAIL A

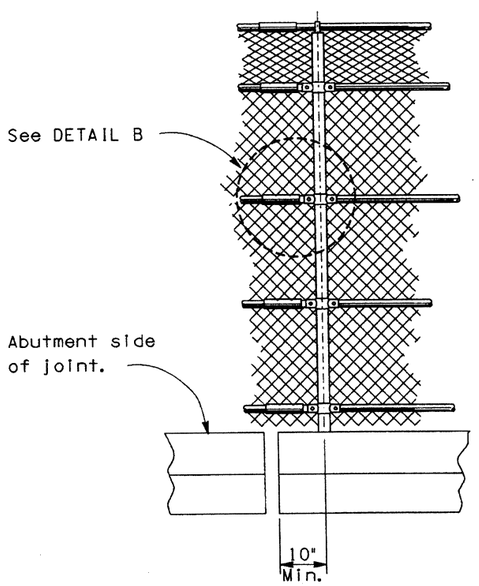

DETAIL AT EXPANSION JOINT

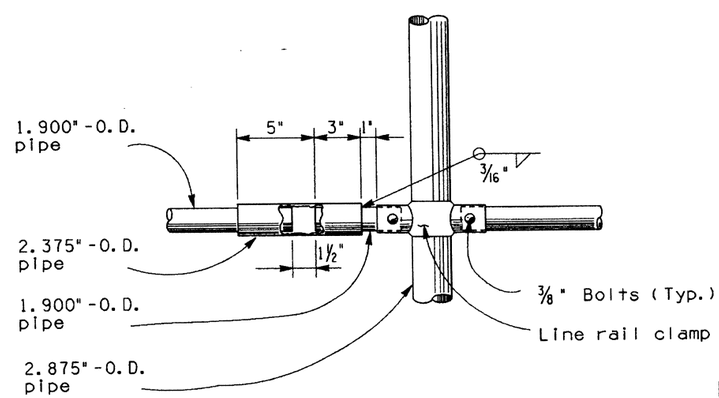

DETAIL B

NOTES:

Chain link fence fabric, posts, fittings and hardware shall conform to AASHTO M181 - Grade I or Grade II. The zinc coated fabric shall be Class C or D.

All galvanizing that has been damaged in handling, transporting or welding shall be repaired by the application of a paste compound of an approved zinc powder and flux.

All exposed edges shall be smooth.

All bolt heads shall be to the inside.

DESIGN		NO	DESCRIPTION OF REVISIONS	MADE BY	DATE
		1	Revised pipe callout	C.H.	6-88
		2	Revised General Notes	C.H.	4-92
		3			
		4			
DESIGN					
DRAWN					
CHECKED					

	DESIGN APPROVED	ARIZONA DEPARTMENT OF TRANSPORTATION HIGHWAYS DIVISION STANDARD DRAWINGS	REVISION 4-92
	APPROVED FOR DISTRIBUTION	PEDESTRIAN FENCE DETAILS WITH CURB	STANDARD NO. B-22.50

CADD FILENAME= ZFA
VIEW NAME=

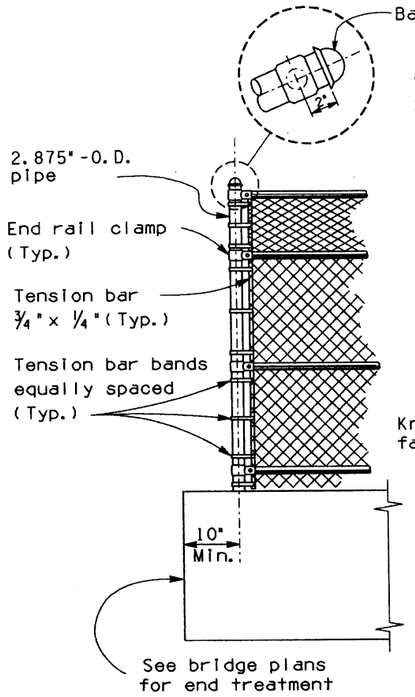

TYPICAL END POST ELEVATION

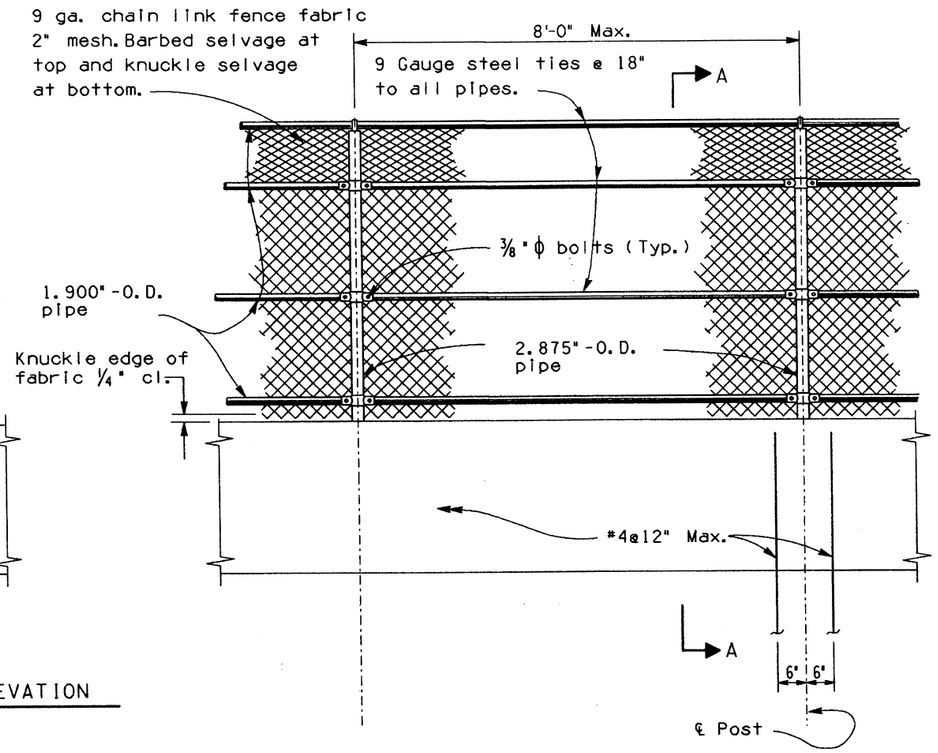

TYPICAL PANEL ELEVATION

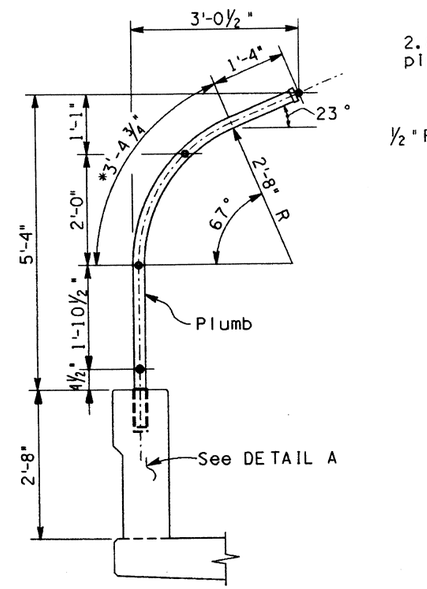

* Dimensions for fencing.

SECTION A-A

(Typical interior post)

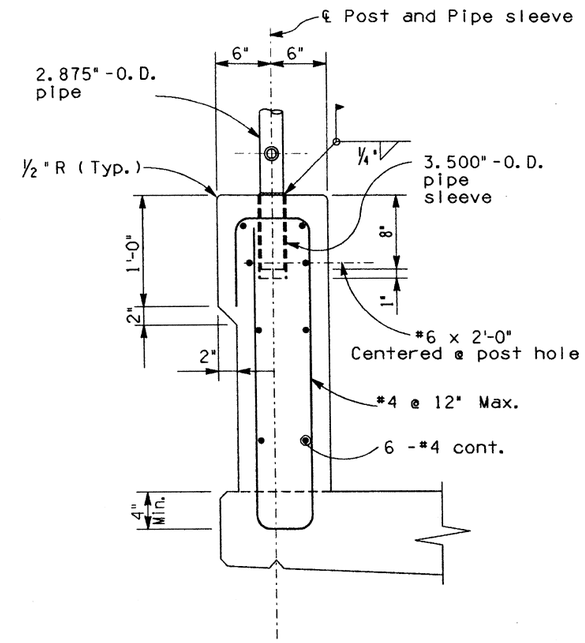

DETAIL A

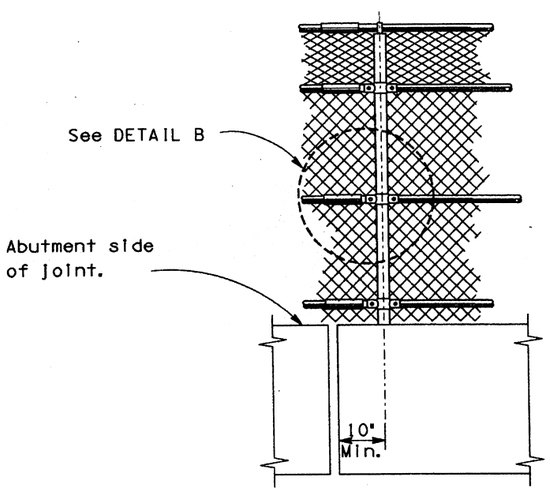

DETAIL AT EXPANSION JOINT

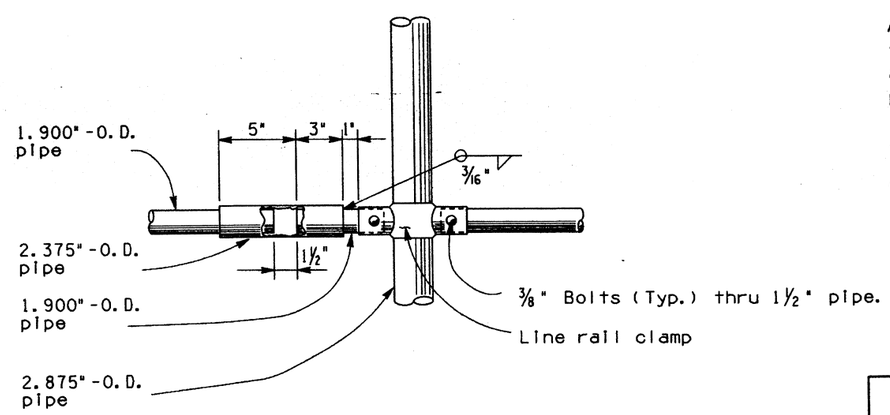

DETAIL B

NOTES:

Chain link fence fabric, posts, fittings and hardware shall conform to AASHTO M 181 - Grade I or Grade II. The zinc coated fabric shall be Class C or D.

All galvanizing that has been damaged in handling, transportation or welding shall be repaired by the application of a paste compound of an approved zinc powder and flux.

All exposed edges shall be smooth.

All bolt heads shall be to the inside.

NO	DESCRIPTION OF REVISIONS	MADE BY	DATE
1	Revised pipe callout	C. H.	6-88
2	Revised General Notes	C. H.	4-92
3			
4			

DESIGN
DRAWN
CHECKED

CADD FILENAME= ZFA
VIEW NAME=

Registered Professional Engineer (Civil) CERTIFICATE NO. 5910 F. DANIEL DAVIS Arizona U.S.A.

DESIGN APPROVED

APPROVED FOR DISTRIBUTION

ARIZONA
DEPARTMENT OF TRANSPORTATION
HIGHWAYS DIVISION
STANDARD DRAWINGS

PEDESTRIAN FENCE DETAILS WITH PARAPET

REVISION 4-92

STANDARD NO. B-22.60

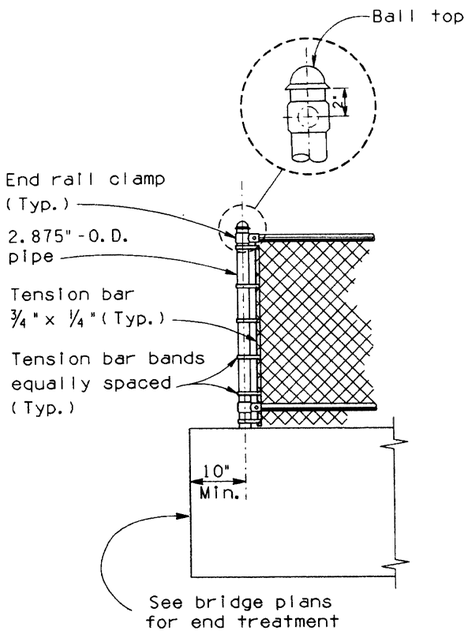

TYPICAL END POST ELEVATION

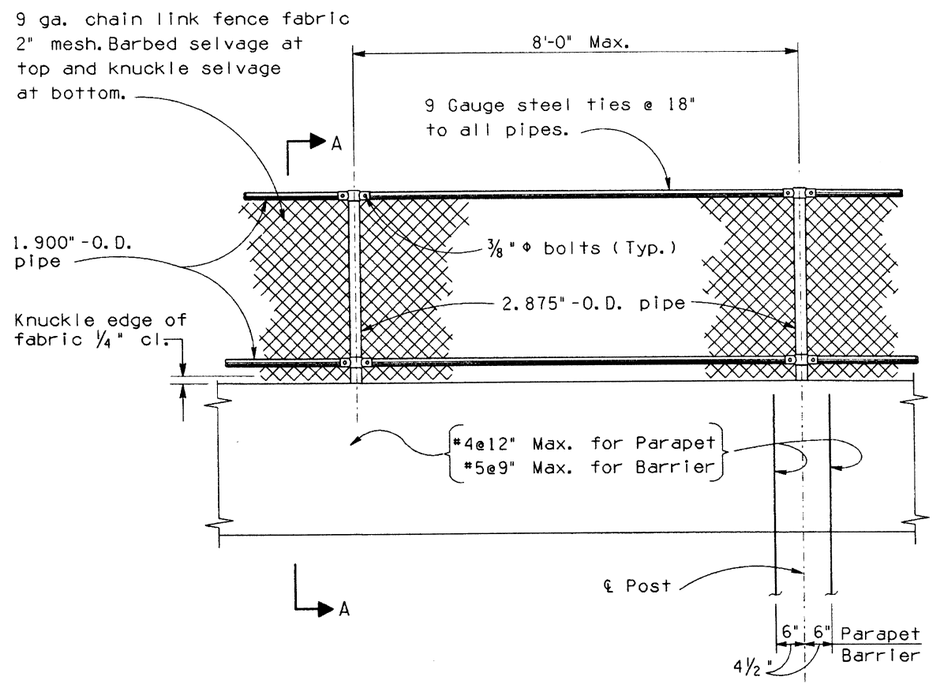

TYPICAL PANEL ELEVATION

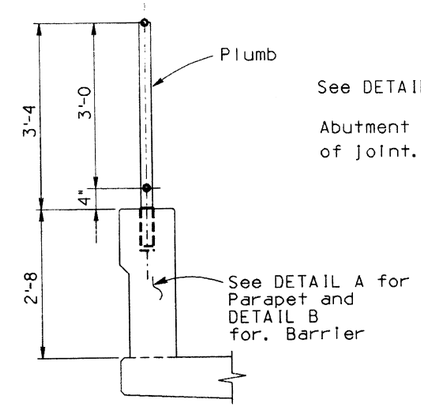

SECTION A-A
(Typical interior post)

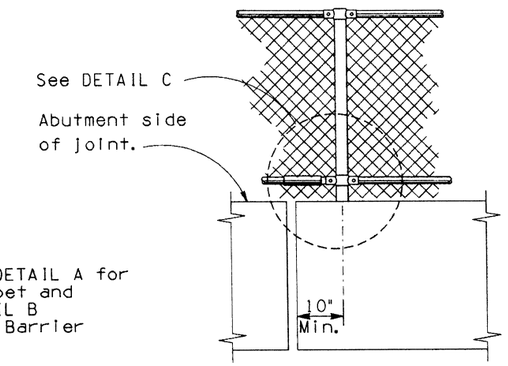

DETAIL AT EXPANSION JOINT

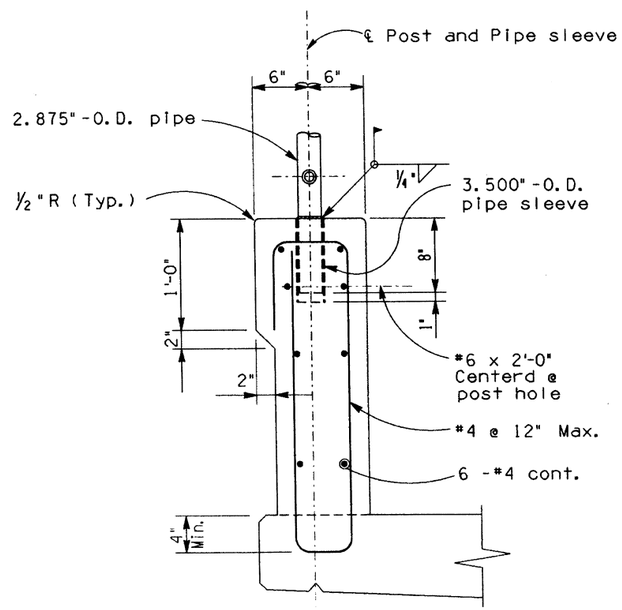

DETAIL A

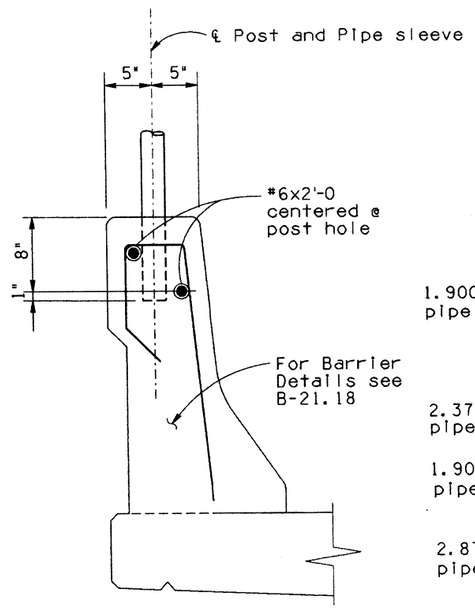

DETAIL B

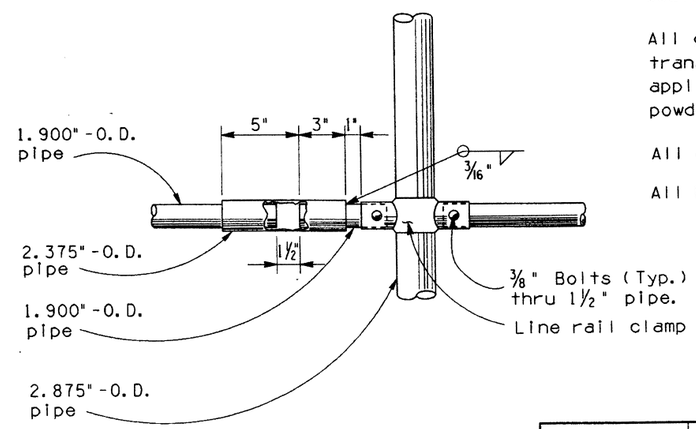

DETAIL C

NOTES:

Chain link fence fabric, posts, fittings and hardware shall conform to AASHTO M 181 - Grade I or Grade II. The zinc coated fabric shall be Class C or D.

All galvanizing that has been damaged in handling, transportation or welding shall be repaired by the application of a paste compound of an approved zinc powder and flux.

All exposed edges shall be smooth.

All bolt heads shall be to the inside.

DESIGN			NO	DESCRIPTION OF REVISIONS	MADE BY	DATE
DRAWN	C. H.	4-92	1			6-88
CHECKED	K. W.	4-92	2			
			3			
			4			

Registered Professional Engineer (Civil) 9910 F. DANIEL DAVIS Arizona U.S.A.	DESIGN APPROVED	ARIZONA DEPARTMENT OF TRANSPORTATION HIGHWAYS DIVISION STANDARD DRAWINGS	REVISION
	APPROVED FOR DISTRIBUTION	6'-0 HIGH FENCE DETAILS WITH PARAPET OR BARRIER	STANDARD NO. B-22.70

CADD FILENAME= ZFA
VIEW NAME=

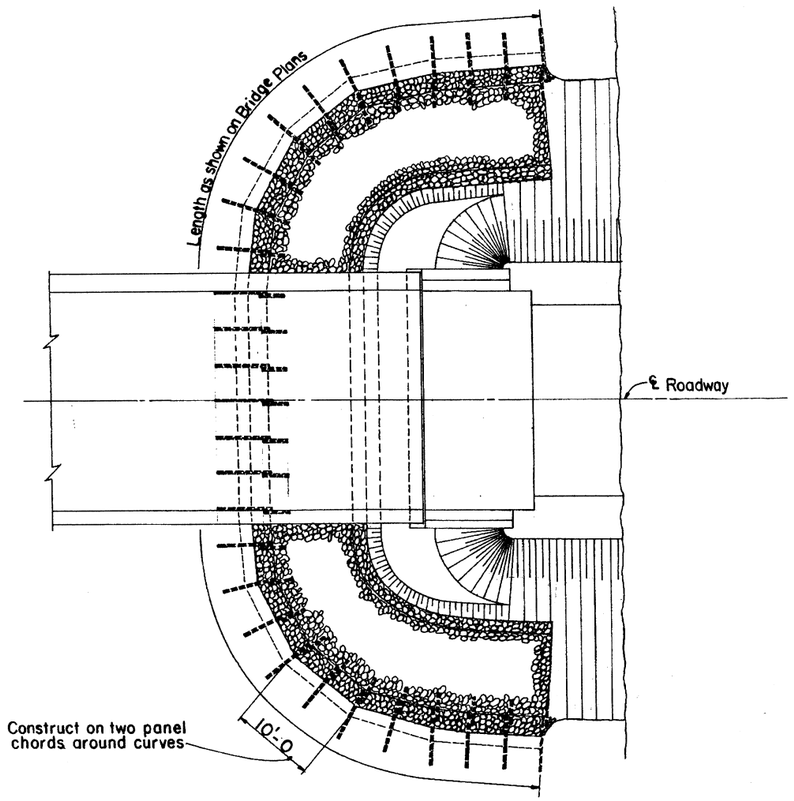

PLAN OF BANK PROTECTION AT ABUTMENT
Scale: 1" = 10'

RAIL CONNECTION DETAIL
Scale: 1 1/2" = 1'-0
Burn holes through rails in field and bolt together as shown

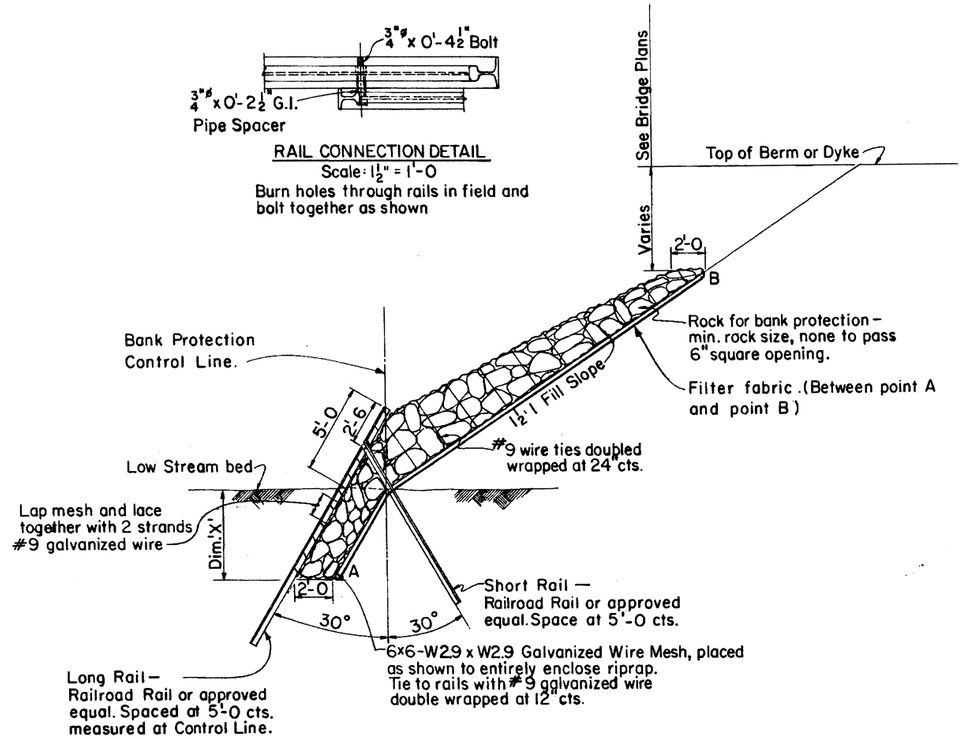

TYPICAL SECTION
Scale: 1/4" = 1'-0

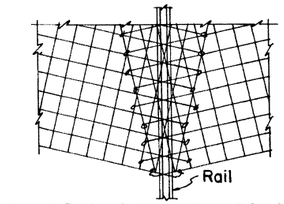

ELEVATION AT CHORD POINT ON CURVE
Scale: 1/2" = 1'-0

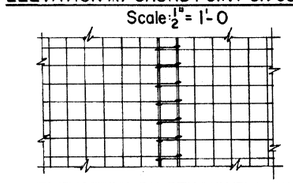

ELEVATION ON STRAIGHT A-WAY
Scale: 1/2" = 1'-0

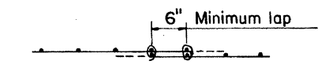

SECTION
Scale: 1" = 1'-0
WIRE MESH SPLICE DETAILS

Type	Dim. 'X'	Min. Rail Length	
		Long Rail	Short Rail
A	5'-0	22'	10'
B	7'-6	25'	13'
C	10'-0	28'	16'

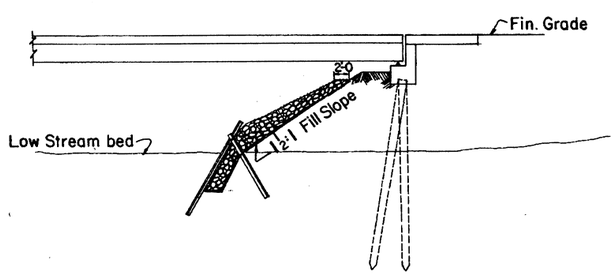

SECTION ON ℄ ROADWAY

GENERAL NOTES

Construction – St'd. Spec's. Ariz. Dept. of Transportation Edition of 1982, revised to date.

Rails may be either new or used. If used rails are furnished they shall be free from severe corrosion and equal to 95% of original section. Rails shall have a minimum weight per yard of 50 pounds.

All wire mesh, bolts, pipe spacers and tie wire shall be galvanized.

DESIGN	KST	2-73	NO.	DESCRIPTION OF REVISIONS	MADE BY	DATE	NO.	DESCRIPTION OF REVISIONS	MADE BY	DATE
DRAWN	JRM	3-73	1	Removed 2:1 Rock Slope note	JTW	7-76	4	Removed Detail B, Add Table	JEM	10-86
CHECKED			2	Add Filter fabric.	CH	8-82	5			
			3	Changed R.R. Rail Description	JEM	3-85	6			

Registered Professional Engineer (Civil) Certificate No. 9 Ben C. Gerwick Jr. Dec 31, 19 Arizona U.S.A.

DESIGN APPROVED	ARIZONA DEPARTMENT OF TRANSPORTATION HIGHWAYS DIVISION STANDARD DRAWINGS	REVISION
R.C. Brechler		10-86
APPROVED FOR DISTRIBUTION	RAIL BANK PROTECTION FOR BRIDGES	STANDARD NO.
E.R. Snadlin		B-23.10

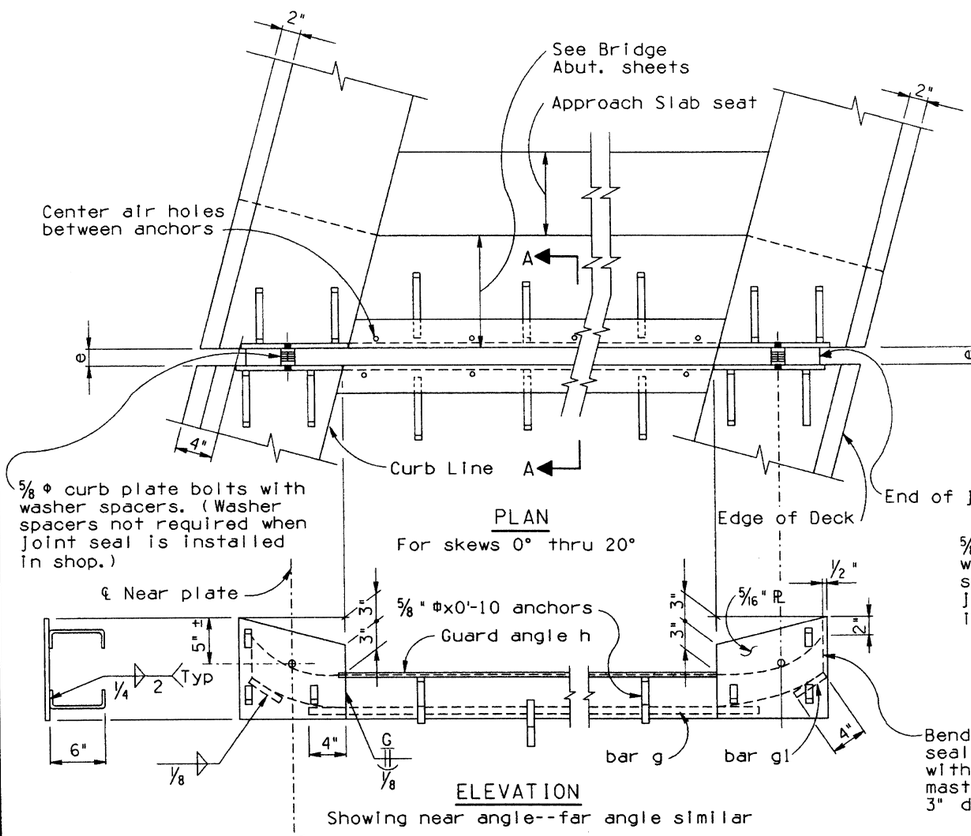

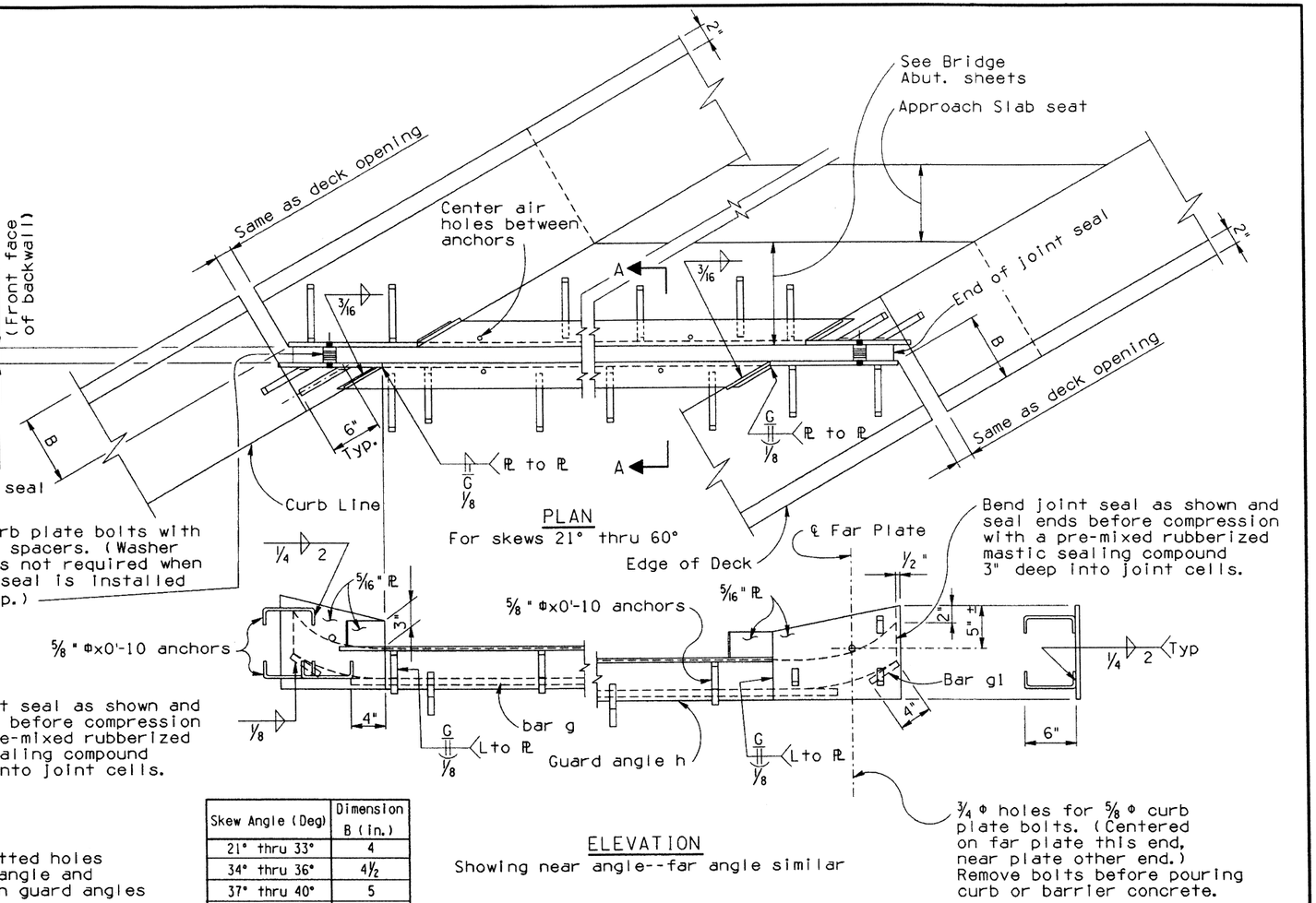

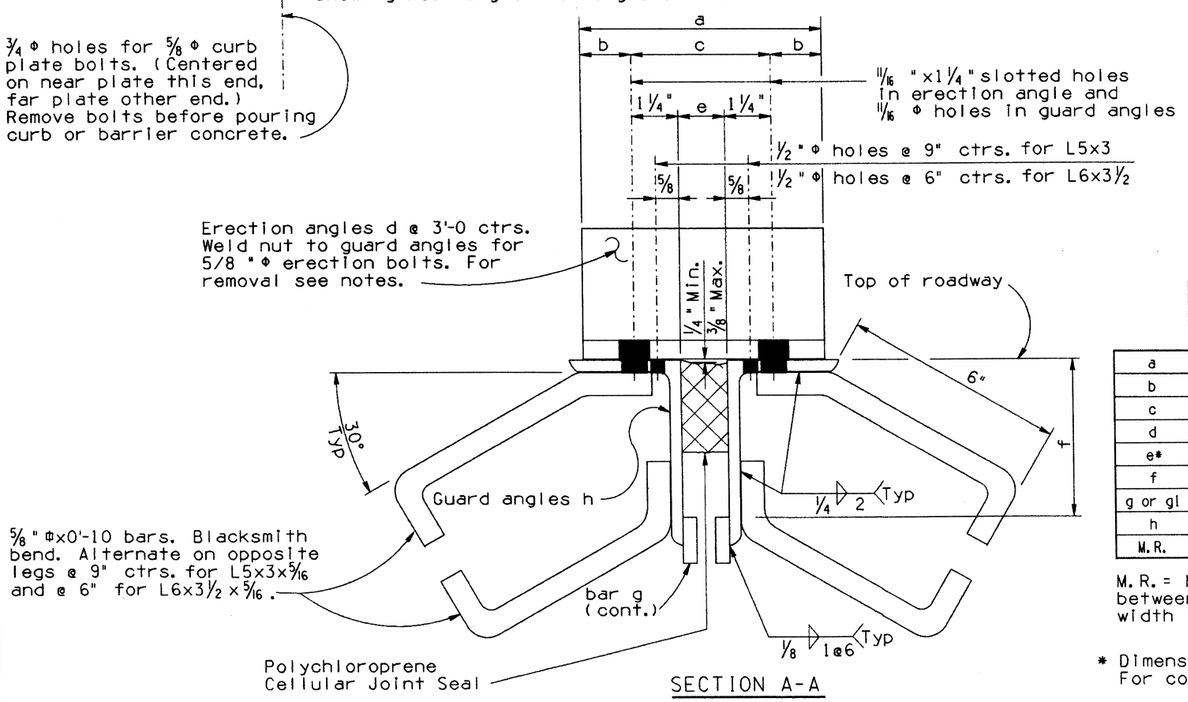

Skew Angle (Deg)	Dimension B (in.)
21° thru 33°	4
34° thru 36°	4 1/2
37° thru 40°	5
41° thru 43°	5 1/2
44° thru 47°	6
48° thru 51°	6 1/2
52° thru 54°	7
55° thru 57°	7 1/2
58° thru 60°	8

	Polychloroprene Cellular Joint Seal (Nominal Dimension)			
	2 x 2	3 x 3	4 x 4	5 x 5
a	6 1/2	7	7 1/2	8
b	1 3/8	1 5/16	1 1/4	1 1/4
c	3 3/4	4 3/8	5	5 1/2
d	L 2x2x1/4	L 3x3x3/8	L 3 1/2 x3 1/2 x3/8	L 4x4x3/8
e*	1 1/4	1 7/8	2 1/2	3
f	3 1/4	4 5/8	5 1/2	6 3/8
g or gl	1/4 x3/4 bar	3/8 x3/4 bar	1/2 x3/4 bar	5/8 x3/4 bar
h	L 5x3x5/16	L 5x3x5/16	L 6x3 1/2 x5/16	L7x4x1/2
M.R.	3/4	1 3/8	1 3/4	2 1/2

M.R. = Movement rating. The difference between the smallest and the largest width of seal in place.

* Dimension Shown for Steel Bridges. For concrete bridges see Bridge Plans.

NOTES:

Guard angles and cellular seal shall be one piece, without splices, for lengths 60 feet or less. For over 60 feet, guard angles and cellular seal may be two pieces butted together, without splicing, at the crown or another location away from drainage.

Paint and painting shall conform to Std. Specs. of ADOT, current edition. One prime coat on all surfaces not in contact with concrete, two coats of paint on surfaces of guard angles, bar g, bar gl and 5/16" plates not in contact with joint seal or concrete.

Joint opening e shall be adjusted in the field for any variation of temperature above or below the mean temperature. See bridge sheets for the mean temperature and temperature correction.

Material - Structural Steel A.S.T.M. A36.

Erection angles and curb plate bolts shall not be removed until joint is fully encased in concrete (except curbs) and such concrete has attained its initial set.

Holes for curb plate bolts shall be plugged before placing curb concrete.

NO	DESCRIPTION OF REVISIONS	MADE BY	DATE
1	Revised joint callouts	C.H.	6-88
2	Revised 'g' bars, f dimensions & Miscellaneous	C.H.	4-92
3			
4			

DESIGN
DRAWN
CHECKED

Registered Professional Engineer (Civil) Certificate No. 9910 F. DANIEL DAVIS Arizona U.S.A.

DESIGN APPROVED

APPROVED FOR DISTRIBUTION

ARIZONA
DEPARTMENT OF TRANSPORTATION
HIGHWAYS DIVISION
STANDARD DRAWINGS

COMPRESSION SEAL JOINT

REVISION 4-92

STANDARD NO. B-24.20

CADD FILENAME= ZFA
VIEW NAME=

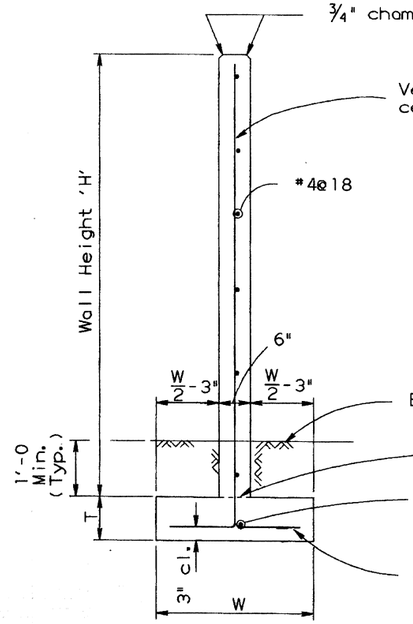

H <= 7'-0

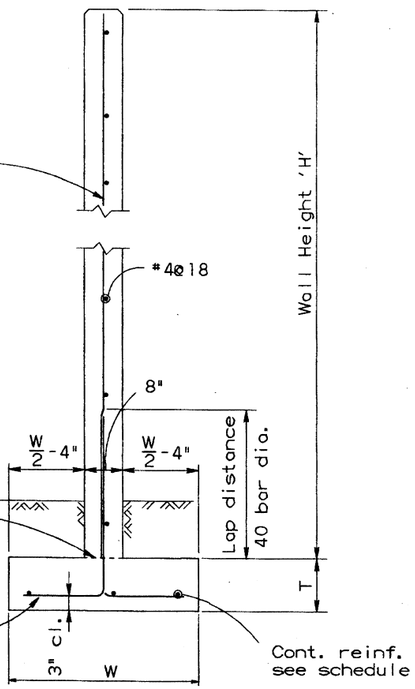

H > 7'-0 &
H <= 12'-0

TYPICAL WALL SECTIONS

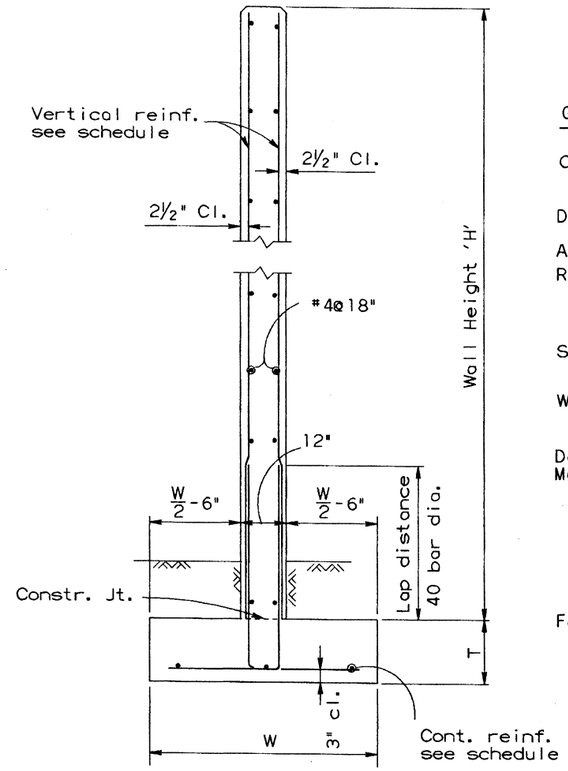

H > 12'-0

GENERAL NOTES

Construction - Arizona Department of Transportation Standard Specifications for Road and Bridge Construction, Edition of 1982 and 1985 Supplemental.

Design - AASHTO Standard Specifications for Highway Bridges. 1983 Edition and 1984 and 1985 Supplements.

All concrete shall be class 'S' unless noted otherwise.

Reinforcing Steel shall conform to ASTM Specification A615. Bar sizes #6 and smaller shall be designed as Grade 40 and furnished as Grade 40 or Grade 60.

Bar sizes #7 and larger shall be Grade 60.

Stresses
Concrete ---------- f'c = 2,500 psi.
Grade 40 Reinforcing Steel ------ fs = 20,000 psi.
Grade 60 Reinforcing Steel ------ fs = 24,000 psi.

Wind Load as per 1985 Uniform Building Code. Wind Velocity 80 MPH. Wind Pressure 18.4 psf for heights <= 12'-0 and 24.5 psf for heights > 12'-0.

Design requires a minimum allowable Soil Pressure of 1,500 psf. Maximum allowable backfill variation shall be shown as below:

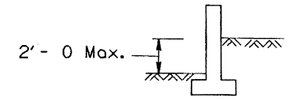

For wall treatment see Project Plans. Increase thickness of wall for any treatment with a depth greater than 1/2".

WALL SCHEDULE

Wall Height 'H'	Ftg. Depth 'T'	Ftg. Width 'W'	Reinforcing	
			Wall & Dowel	Cont. Ftg.
4'	10"	1'-10	#4@9"	1-#7
5'	10"	2'-0	#4@9"	1-#7
6'	10"	2'-2	#4@9"	1-#7
7'	10"	2'-4	#4@9"	1-#7
8'	10"	2'-8	#4@12"	3-#4
9'	10"	2'-10	#4@12"	3-#4
10'	1'-0	3'-0	#5@12"	3-#5
11'	1'-0	3'-4	#5@12"	3-#5
12'	1'-0	3'-6	#5@12"	3-#6
13'	1'-2	4'-2	#5@12"	3-#6
14'	1'-4	4'-6	#5@12"	3-#7

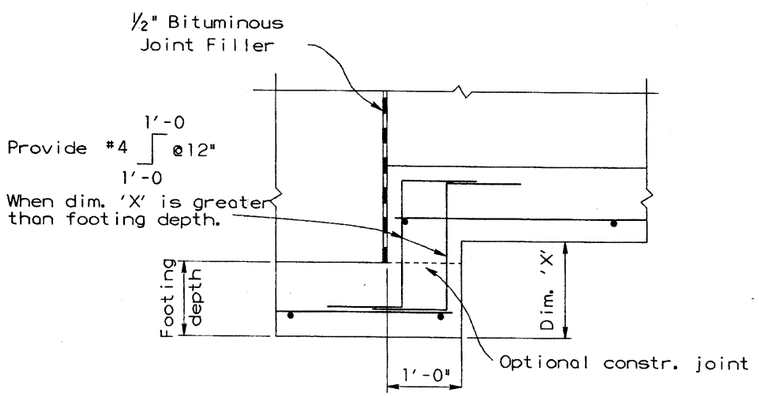

FOOTING STEP DETAIL

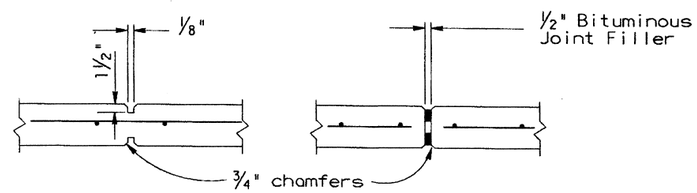

Weakened Planes
Max. Spacing 30'

Expansion Joint
Max. Spacing 90'

TYPICAL JOINT DETAILS
Detail drawn for 8" thick wall

NO	DESCRIPTION OF REVISIONS	MADE BY	DATE
1			
2			
3			
4			

DESIGN
DRAWN KW
CHECKED VL

Registered Professional Engineer (Civil) CERTIFICATE NO. 9910 F. DANIEL DAVIS Date Signed 2/13/87 Arizona U.S.A.

DESIGN APPROVED
F. D. Davis

APPROVED FOR DISTRIBUTION
James C. McGee
2-13-87

ARIZONA
DEPARTMENT OF TRANSPORTATION
HIGHWAYS DIVISION
STANDARD DRAWINGS

CONCRETE SOUND BARRIER WALLS

REVISION

STANDARD NO.
B-30.10

CADD FILENAME= ZFA 1:[51, 1]B30010.DGN
VIEW NAME= B3010

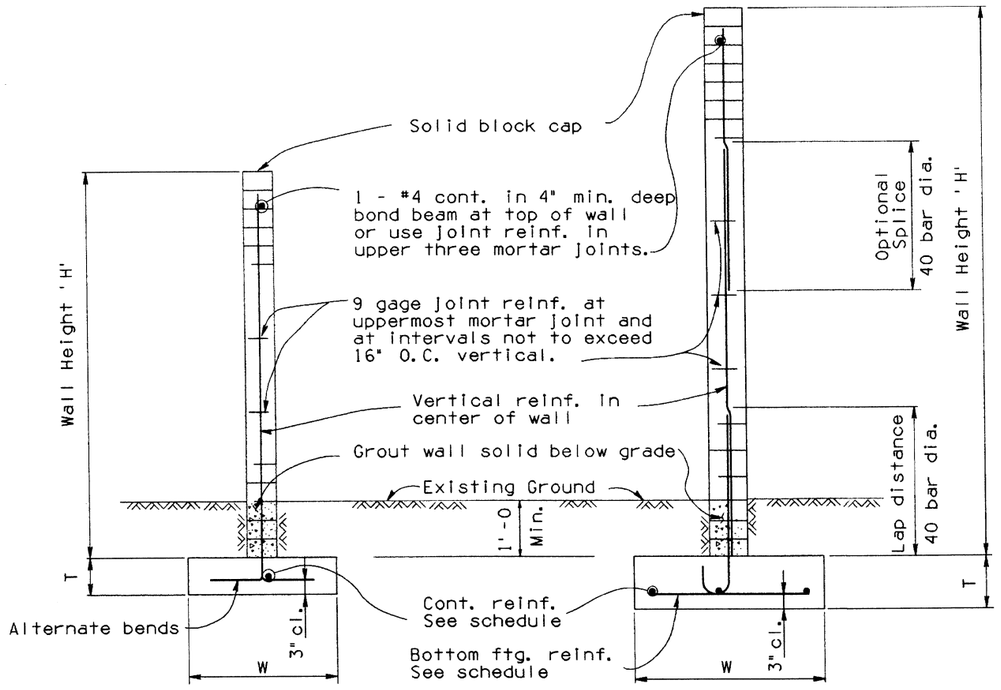

TYPICAL WALL SECTION

WALL SCHEDULE						
Wall Height 'H'	Wall Thick *	Ftg. Depth 'T'	Ftg. Width 'W'	Reinforcing		
				Wall & Dowel	Bottom Ftg.	Cont. Ftg.
4'	6"	10"	1'-10	#5@32"	———	1-#6
5'	6"	10"	2'-0	#5@32"	———	1-#6
6'	6"	10"	2'-2	#5@32"	———	1-#6
7'	6"	1'-0	2'-4	#6@40"	———	1-#6
8'	8"	1'-0	2'-8	#6@40"	#5@40"	3-#4
9'	8"	1'-0	2'-10	#6@32"	#5@32"	3-#4
10'	8"	1'-0	3'-0	#6@24"	#5@24"	3-#5
11'	8"	1'-6	3'-4	#7@40"	#6@40"	3-#5
12'	8"	1'-6	3'-6	#7@24"	#6@32"	3-#6
13'	12"	1'-6	4'-2	#7@40"	#6@40"	3-#6
14'	12"	1'-6	4'-6	#7@24"	#6@32"	3-#7

NOTES:
* Nominal Dimension
Height of wall may vary ± 2".

GENERAL NOTES

Construction - Arizona Department of Transportation Standard Specifications for Road and Bridge Construction, latest Edit.
Design - AASHTO Standard Specifications for Highway Bridges. 1983 Edition and 1984 and 1985 Supplements.
All concrete shall be class 'S' unless noted otherwise.
Reinforcing Steel shall conform to ASTM Specification A615.
Bar sizes #6 and smaller shall be designed as Grade 40 and furnished as Grade 40 or Grade 60.
Bar sizes #7 and larger shall be Grade 60.
9 Gage joint Reinforcing : Standard weight, Fy = 33,000 psi.
Masonry block, mortar, grout and wind load as per 1985 Uniform Building Code.
Stresses - Concrete ---------- f'c = 2,500 psi.
Masonry ---------- f'm = 1,350 psi.
Grade 40 Reinforcing Steel ------ fs = 20,000 psi.
Grade 60 Reinforcing Steel ------ fs = 24,000 psi.
Wind Load - Wind Velocity 80 MPH. Wind Pressure 18.4 psf for heights <= 12'-0 and 24.5 psf for heights > 12'-0.
Design requires a minimum allowable Soil Pressure of 1,500 psf.
Control joints shall occur at intervals not to exceed 24'-0.
Maximum allowable backfill variation shall be shown as below:

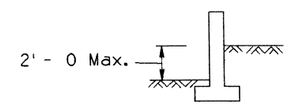

For wall treatment and type of block see Project Plans.
This drawing compatible with block types shown on Arizona Masonry Guild Standard #1080-80, #1090-80, #2000-80 and #2010-80.

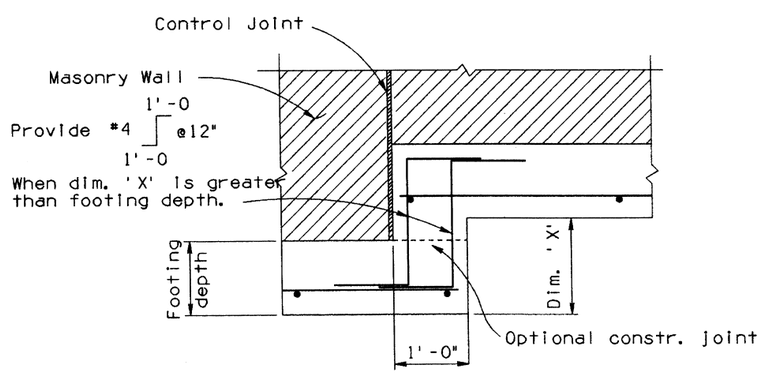

FOOTING STEP DETAIL

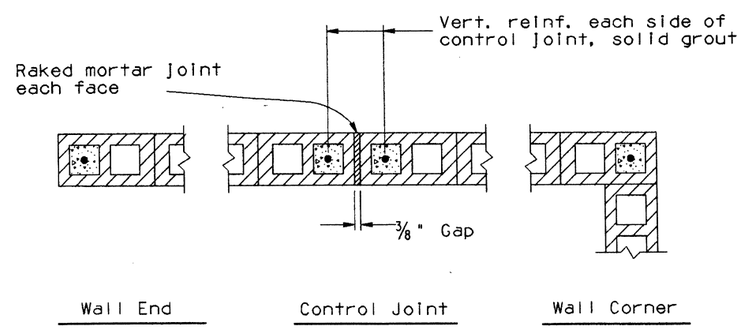

TYPICAL WALL DETAILS

NO	DESCRIPTION OF REVISIONS	MADE BY	DATE
1	Added Optional Splice	J.M.	3-88
2	Added height of wall ± 2'	J.M.	4-92
3			
4			

DESIGN	KW
DRAWN	VL
CHECKED	

Registered Professional Engineer (Civil) Certificate No. 9910 F. DANIEL DAVIS Date Signed 5-14-92 Arizona U.S.A.	DESIGN APPROVED	ARIZONA DEPARTMENT OF TRANSPORTATION HIGHWAYS DIVISION STANDARD DRAWINGS	REVISION 4-92
	APPROVED FOR DISTRIBUTION	MASONRY SOUND BARRIER WALLS	STANDARD NO. B-30.20

CADD FILENAME= ZFA 1:#51,1#B3020.DGN
VIEW NAME= B3020

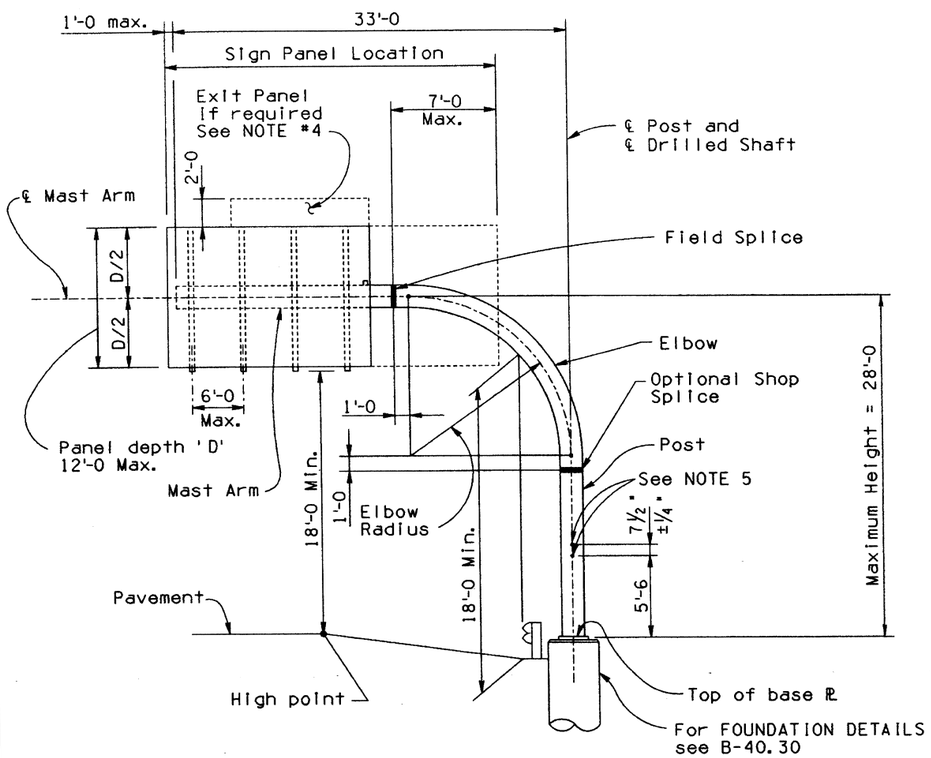

TUBULAR CANTILEVER SIGN STRUCTURE ELEVATION

TYPE	TUBULAR FRAME		PIPE WALL THICKNESS INCHES			ELBOW RADIUS	CAMBER		∡ 'A'
	Nominal Pipe Dia.	Max. Area Sq. Ft.	Post	Elbow	Mast Arm		"X"	"Y"	
1	16"	160	1.219	1.219	.500	12'-0	1½"	3⅛"	0° 40' 44"
2	18"	230	1.156	1.156	.625	12'-0	1¼"	2⅝"	0° 34' 11"

CANTILEVER SIGN NOTES

1. Wind Loading: 80 MPH Velocity.
2. Maximum Height: 50'-0 from original ground to center of sign panel (Regardless of post height).
3. The maximum sign panel overlap onto elbow shall not exceed 7'-0 from field splice.
4. The sum of the sign panel area plus the exit panel area shall not exceed the maximum area shown in table. All signs shall be placed within Sign Panel Location.
5. Drill and tap for 1½" chase nipples and plug with recessed pipe plugs. Place perpendicular to sign panel axis and away from approaching traffic.
6. If the tubular cantilever structure is erected as one unit the pipe assembly shall be adequately suspended to avoid distortions.
7. During sign erection the post shall be raked as necessary with the use of leveling nuts to make the sign panel level. See Traffic Signing Plans for specific locations and elevations.

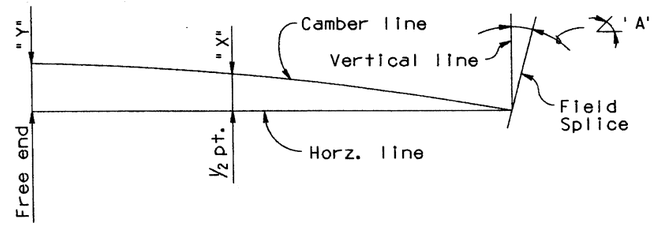

CAMBER DIAGRAM

Camber shown is required to be built into mast arm. Members shall be erected so that camber is provided above the horizontal line thru the field splice.

Calculated camber provides for deflections due to dead loads of tubular cantilever structure and dead loads due to sign panels and attachments.

Pipe flange of mast shall be perpendicular to its longitudinal axis. Pipe flange of elbow shall be tilted from the vertical line at the angle given in table.

GENERAL NOTES:

Construction Specification - Arizona Department of Transportation Standard Specifications for Road and Bridge Construction, latest Edition.

Design Specifications - AASHTO Standard Specifications for Structural Supports for Highway Signs, Luminaires and Traffic Signals, Edition of 1985 and 1986 through 1991 Interim Specifications.

All concrete shall be Class "S".

Reinforcing steel shall conform to ASTM Specification A615 (Grade 60).

Structural Steel shall conform to ASTM Specification A36 unless noted otherwise.

Stresses:

Class "S" concrete	f'c	=	3500 psi
Grade 60 reinforcing steel	fs	=	24000 psi
Structural steel	fs	=	20000 psi

All bolts shall conform to ASTM Specification A325. All bolts, nuts and washers shall be galvanized in accordance with the requirements of ASTM A153. All other steel shall be galvanized after fabrication in accordance with ASTM A123.

Welding of structural tubing shall conform to the requirements of the American Welding Society, Structural Welding Code, D1.1-80, as modified by the AASHTO Standard Specifications for Welding of Structural Steel Highway Bridges, 1981. All other welding shall conform to the requirements of the American Welding Society, ANSI/AASHTO/AWS D1.5-88 Bridge Welding Code. All welding shall be continuous unless noted otherwise. All butt welds shall be full penetration using prequalified welding procedures and shall be tested by ultrasonic testing. All butt welds shall be ground flush, full width. Grinding striations shall be parallel to length of member.

The Column to base plate weld shall be tested by ultrasonic testing.

All tubular structural frame pipe shall be welded or seamless steel pipe and shall conform to ASTM Specification; A-53, Grade B, Type E or S; A252 Grade 2, Type E or Type S; A106, Grade B. Type S only; API 5L, Grade B, Type E or Type S; API5LX, Grade X42, Type E or Type S.

Dimensions shall not be scaled from drawings.

NOTE:

For Frame Details see B-40.40.
For Sign Connection Details see B-40.50.
For Overhead Light Details see B-40.60.

DESIGN	G.K.	1-92
DRAWN	J.W.	2-92
CHECKED	S.H.	2-92

NO	DESCRIPTION OF REVISIONS	MADE BY	DATE
1			
2			
3			
4			

DESIGN APPROVED: F. Daniel Davis

APPROVED FOR DISTRIBUTION: Eugene T. Hardt

ARIZONA
DEPARTMENT OF TRANSPORTATION
HIGHWAYS DIVISION
STANDARD DRAWINGS

TUBULAR SIGN STRUCTURES
TUBULAR CANTILEVER

REVISION

STANDARD NO. B-40.10

ZFLD\B1B2B3B4B10.DGN42 VIEW NAME:
11-MAY-1992 08:57

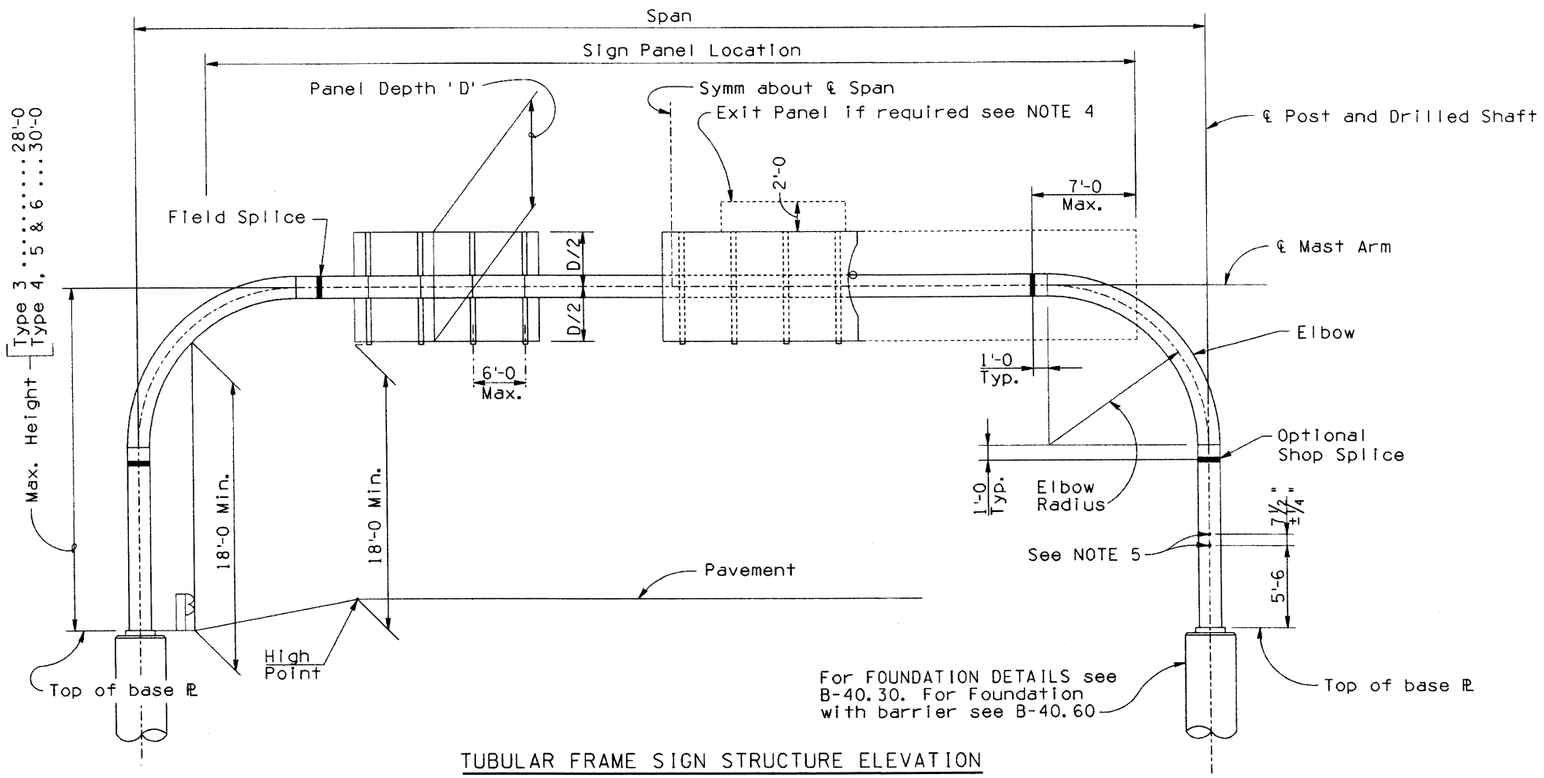

TUBULAR FRAME SIGN STRUCTURE ELEVATION

OVERHEAD SIGN NOTES

1. Wind Loading: 80 MPH Velocity
2. Maximum Height: 50'-0 from original ground to center of sign panel (Reguardless of post height).
3. The maximum sign panel overlap onto elbow shall not exceed 7'-0 from field splice.
4. The sum of the sign panel area plus the exit panel area shall not exceed the maximum area shown in table. All signs shall be placed within Sign Panel Location.
5. Drill and tap for 1½" chase nipples and plug with recessed pipe plugs. Place perpendicular to sign panel axis and away from approaching traffic. Install nipples on shoulder posts only.
6. Maximum difference between post heights for an individual frame = 5'-0.
7. For Standard pipe mast arms with lengths greater than 60'-0 an optional field splice will be permitted at the third points of mast arm length to facilitate hauling operations.
8. Before any portion of the tubular frame is assembled in its final position, the Contractor shall demonstrate to the Engineer by preassembly or other approved methods that the span length of the frame in the no load condition is equal to (± ½ inch) the field measured span length between foundations.
9. If the tubular frame is erected as one unit the frame shall be adequately suspended to avoid distortions or changes in span length between base plates.

TYPE	TUBULAR FRAME			PIPE WALL THICKNESS INCHES			90° ELBOW RADIUS	Max. Depth 'D'
	Span	Nominal Pipe Dia.	Max. Area Sq. Ft.	Post	Elbow	Mast Arm		
3	20'-90'	12"	250	1.312	1.312	1.000	10'-0	8'
4	40'-70'	16"	690	1.219	1.219	.500	10'-0	12'
5	71'-110'	20"	920	1.280	1.280	.625	12'-0	12'
6	111'-142'	22"	920	1.125	1.125	.875	12'-0	12'

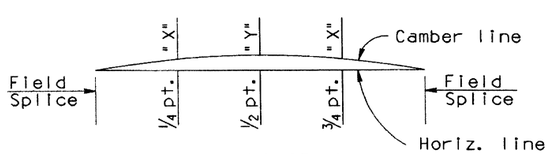

CAMBER DIAGRAM

Camber shown is required to be built into horizontal members. Members shall be erected so that camber is provided above the Horizontal line.

CAMBER			
FRAME NUMBER	Max. Span	"X"	"Y"
3	70'	1"	1¼"
3	90'	2"	2¾"
4	46'	¼"	⅜"
4	58'	½"	⅝"
4	70'	¾"	1"
5	82'	⅞"	1⅛"
5	94'	1¼"	1¾"
5	106'	1¾"	2⅜"
6	118'	2"	3"
6	130'	3"	4⅛"
6	142'	3⅞"	5⅝"

NOTE:

Calculated camber provides for deflections due to dead load of tubular structure and dead loads due to sign panels and attachments.
For spans other than shown interpolate for X and Y dimensions.

NOTE:

For General Notes see B-40.10.
For Frame Details see B-40.40.
For Sign Connection Details see B-40.50.
For Overhead Light Details see B-40.60.

DESIGN	G.K.	1-92	NO	DESCRIPTION OF REVISIONS	MADE BY	DATE
DRAWN	J.M.	2-92	1			
CHECKED	S.H.	2-92	2			
			3			
			4			

Registered Professional Engineer (Civil) Certificate No. 9910 F. DANIEL DAVIS Date Signed 5-14-92 Arizona U.S.A.	DESIGN APPROVED F. Daniel Davis	ARIZONA DEPARTMENT OF TRANSPORTATION HIGHWAYS DIVISION STANDARD DRAWINGS	REVISION
	APPROVED FOR DISTRIBUTION	TUBULAR SIGN STRUCTURES TUBULAR OVERHEAD	STANDARD NO. B-40.20

ZF1:(051020)SB4020.DGN;2 VIEW NAME:
11-MAY-1992 08:59

NOTE:
Provide 2 Hardened Steel washers, 2 Hex nuts and one Leveling nut for each bolt.
At final position of post all top and bottom nuts of anchor bolts shall be wrench tightened against base plate.

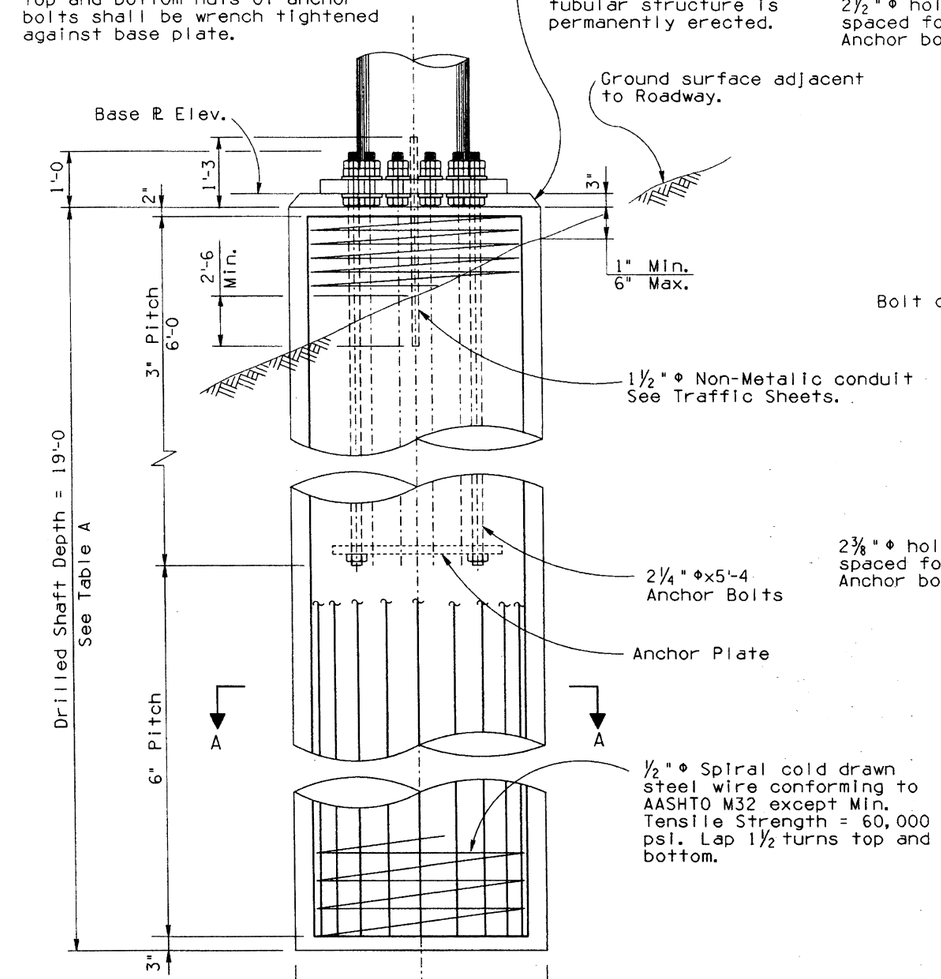

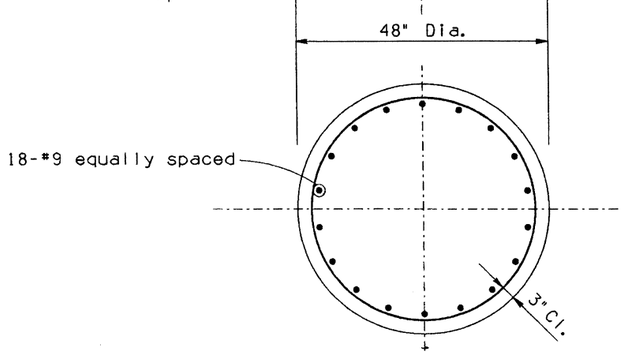

SECTION A-A

DRILLED SHAFT DETAILS

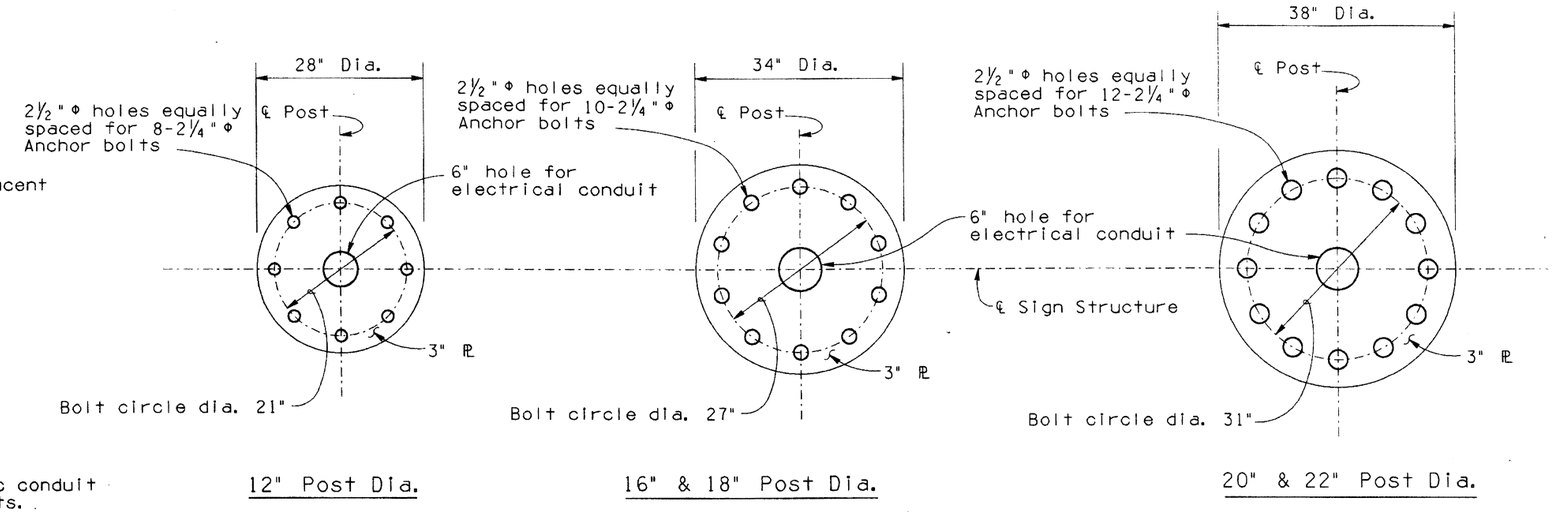

12" Post Dia. 16" & 18" Post Dia. 20" & 22" Post Dia.

BASE PLATE DETAILS

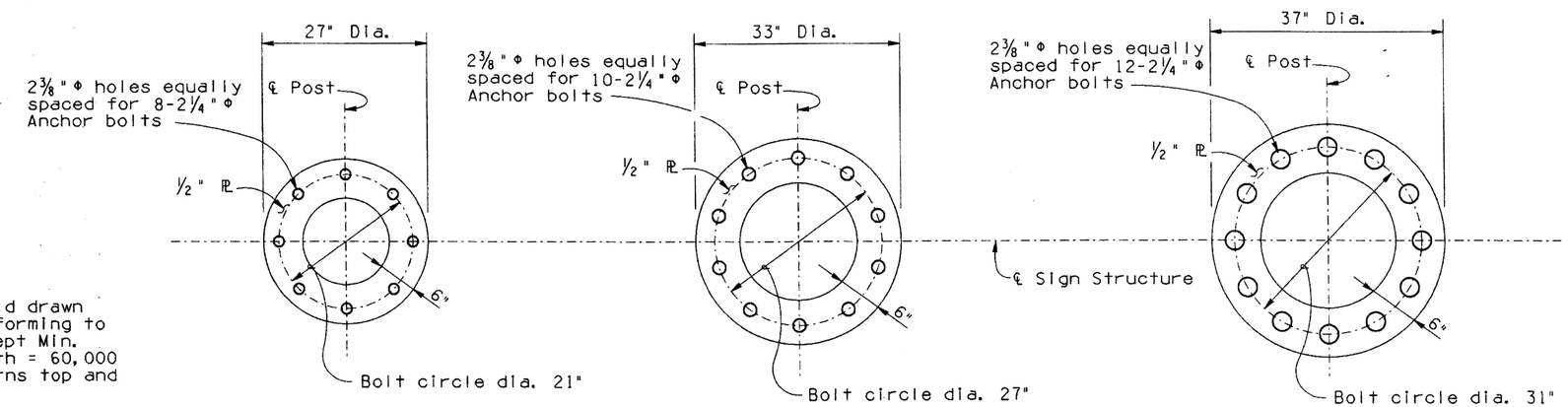

12" Post Dia. 16" & 18" Post Dia. 20" & 22" Post Dia.

ANCHOR PLATE DETAILS

NOTE:

All anchor bolts shall conform to ASTM A36 Specifications. The upper 1'-0 shall be threaded and the upper 1'-2 galvanized in accordance with the requirements of ASTM A153.

Drilled shaft shall be class 'S' concrete and placed against undisturbed material or compacted embankment.

Provide bolt template during installation of anchor bolts. The bolt template shall be fabricated of ¼" thick (Min.) steel plate, similar to anchor plate details, and shall be match drilled to each base plate.

Drilled shafts shall be formed 6" Min. below ground surface.

Compacted backfill shall be in place prior to erecting post.

TABLE A	
Max. Slope	'X'
8:1	0'
6:1	1'
4:1	2'
2:1	4'
1½:1	5'
1:1	8'

Drilled Shaft Depth shall be adjusted for ground slope. Add value of 'X' in Table 'A' to the DRILLED SHAFT DEPTH to obtain total length of shaft.

DESIGN	G.K.	1-92	NO	DESCRIPTION OF REVISIONS	MADE BY	DATE
DRAWN	C.H. & J.M.	2-92	1			
CHECKED	S.N.	2-92	2			
			3			
			4			

	DESIGN APPROVED	ARIZONA DEPARTMENT OF TRANSPORTATION HIGHWAYS DIVISION STANDARD DRAWINGS	REVISION
	APPROVED FOR DISTRIBUTION	TUBULAR SIGN STRUCTURES FOUNDATION DETAILS	STANDARD NO. B-40.30

ZF1:(051020)SB4030.DGN;2
11-MAY-1992 09:01
VIEW NAME:

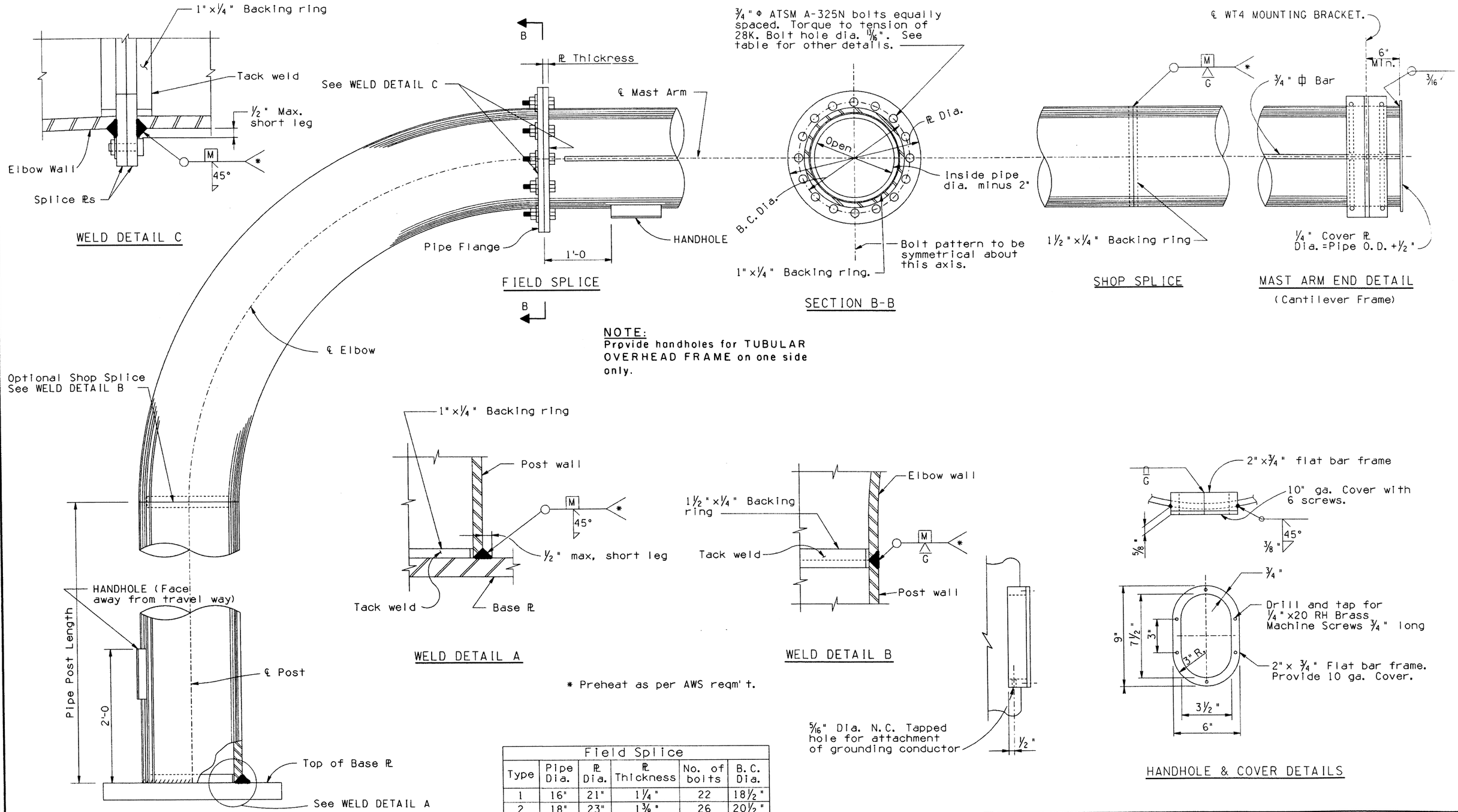

Field Splice					
Type	Pipe Dia.	PL Dia.	PL Thickness	No. of bolts	B.C. Dia.
1	16"	21"	1 1/4"	22	18 1/2"
2	18"	23"	1 3/8"	26	20 1/2"
3	12"	18"	1"	16	15 1/2"
4	16"	21"	1 1/4"	22	18 1/2"
5	20"	25"	1 3/8"	29	22 1/2"
6	22"	27"	1 1/2"	31	24 1/2"

NOTE:
For Base PL Details see B-40.30

DESIGN	G.K.	1-92	NO	DESCRIPTION OF REVISIONS	MADE BY	DATE
DRAWN	J.M.	2-92	1			
CHECKED	S.H.	2-92	2			
			3			
			4			

Registered Professional Engineer (Civil) 9910 F. DANIEL DAVIS Arizona U.S.A.	DESIGN APPROVED	ARIZONA DEPARTMENT OF TRANSPORTATION HIGHWAYS DIVISION STANDARD DRAWINGS	REVISION
	APPROVED FOR DISTRIBUTION	TUBULAR SIGN STRUCTURES FRAME DETAILS	STANDARD NO. B-40.40

ZF1:(051020)SB4040.DGN;2 VIEW NAME:
11-MAY-1992 09:03

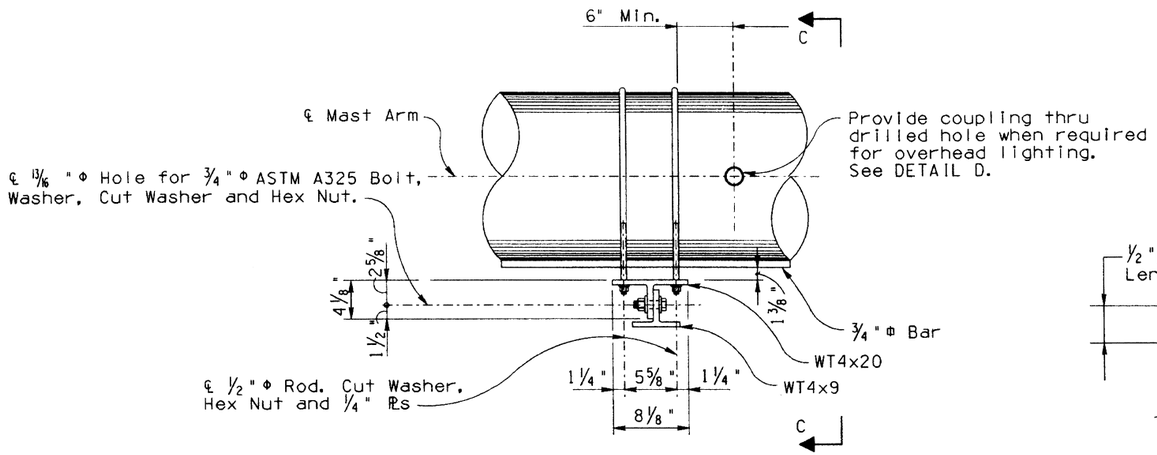

PLAN

SIGN MOUNTING BRACKET

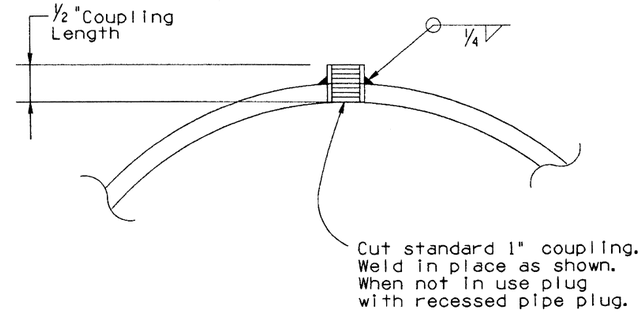

DETAIL D

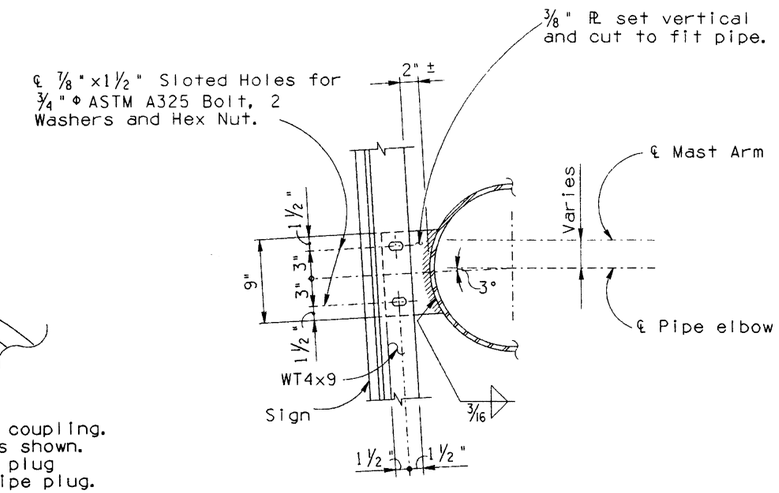

ELEVATION

SIGN MOUNTING BRACKET AT ELBOW

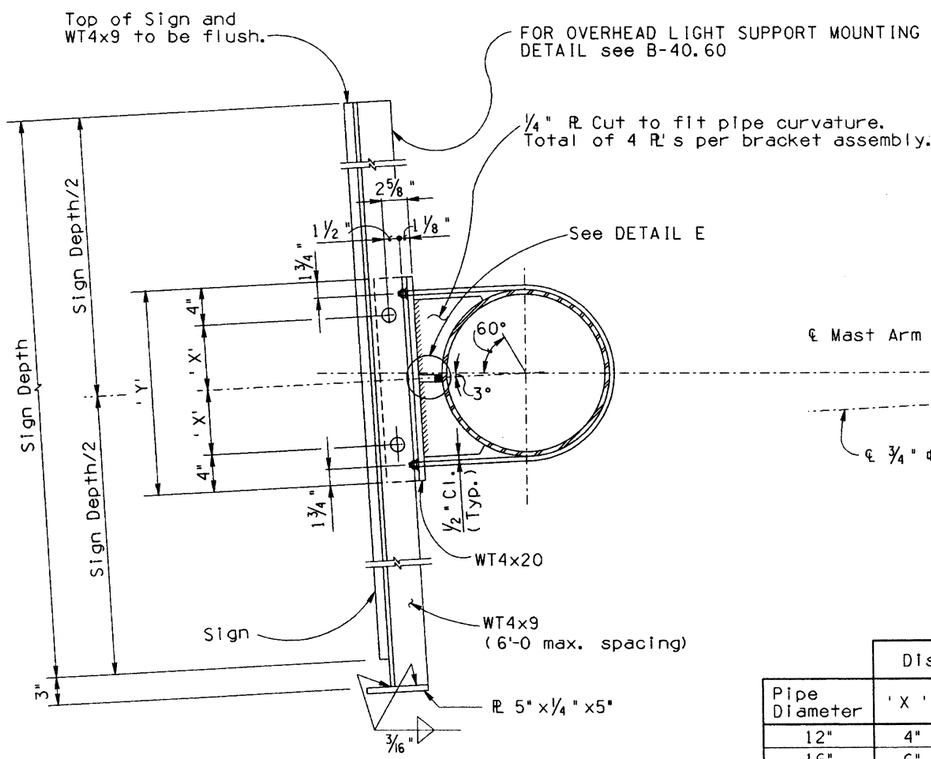

ELEVATION C-C

	Distance	
Pipe Diameter	'X'	'Y'
12"	4"	1'-4
16"	6"	1'-8
18"	7"	1'-10
20"	8"	2'-0
22"	9"	2'-2

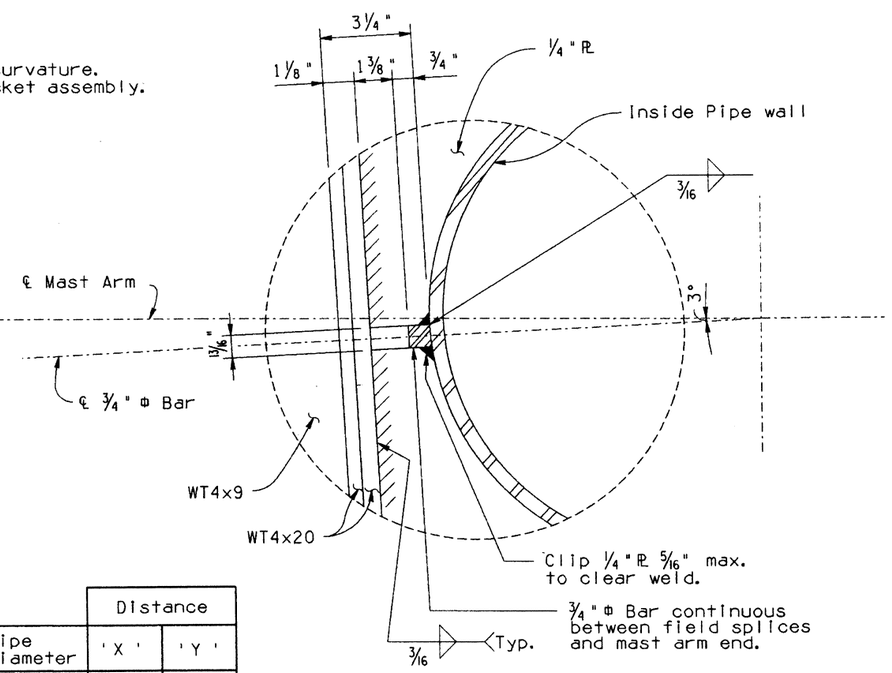

DETAIL E

DESIGN	G.K.	1-92
DRAWN	C.H.	2-92
CHECKED	S.H.	2-92

NO	DESCRIPTION OF REVISIONS	MADE BY	DATE
1			
2			
3			
4			

ZF1:(051020)SB4050.DGN;1
11-MAY-1992 09:07
VIEW NAME:

DESIGN APPROVED

APPROVED FOR DISTRIBUTION

ARIZONA
DEPARTMENT OF TRANSPORTATION
HIGHWAYS DIVISION
STANDARD DRAWINGS

TUBULAR SIGN STRUCTURES
SIGN CONNECTION DETAILS

REVISION

STANDARD NO.
B-40.50

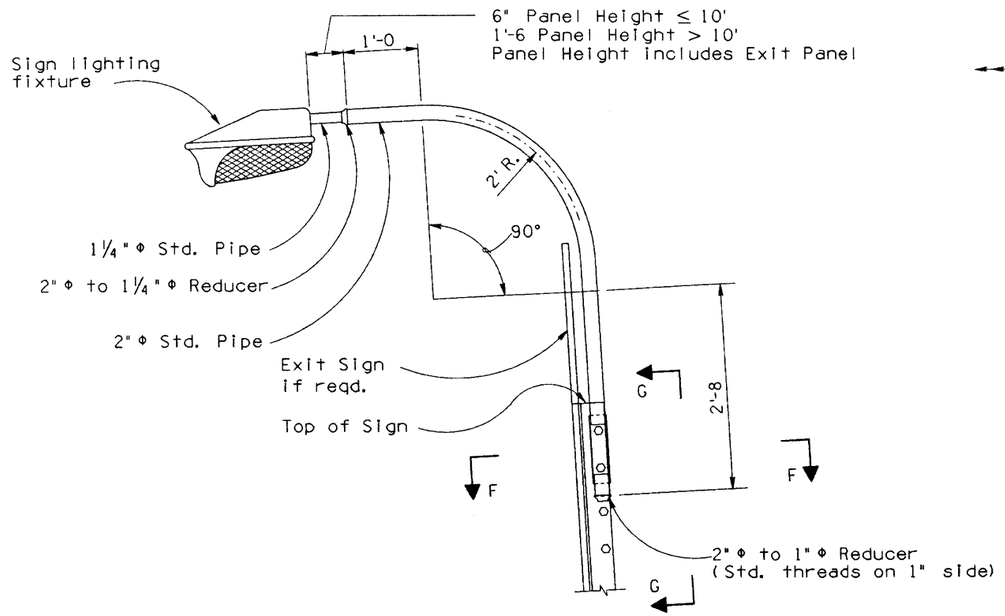

OVERHEAD LIGHT SUPPORT MOUNTING DETAIL

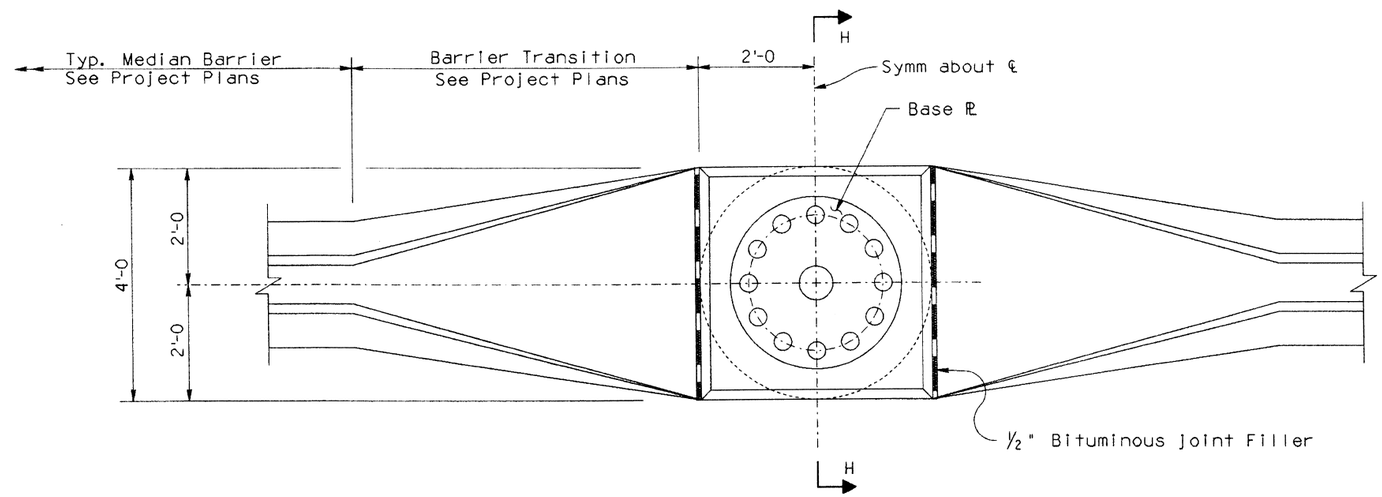

PLAN - TUBULAR POST ON BARRIER

NOTE:

For drilled shaft, base plate and anchor bolt details see B-40.30.

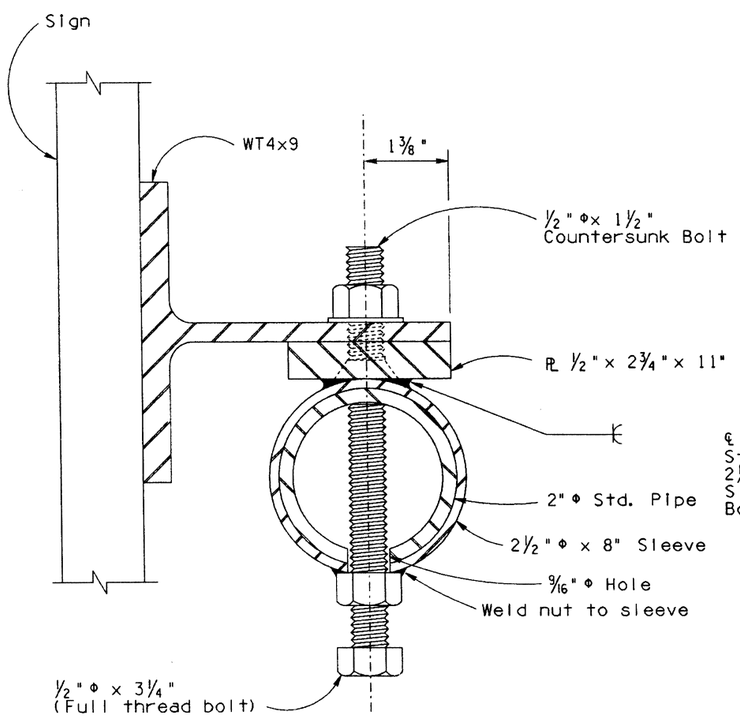

SECTION F-F

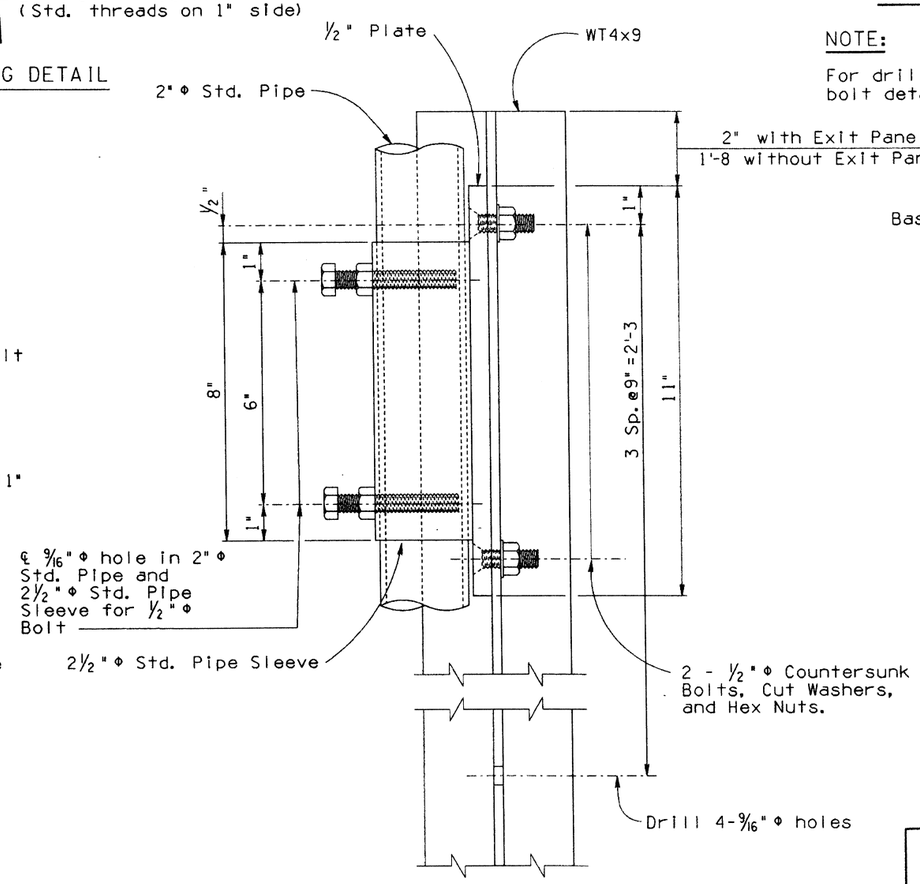

ELEVATION G-G

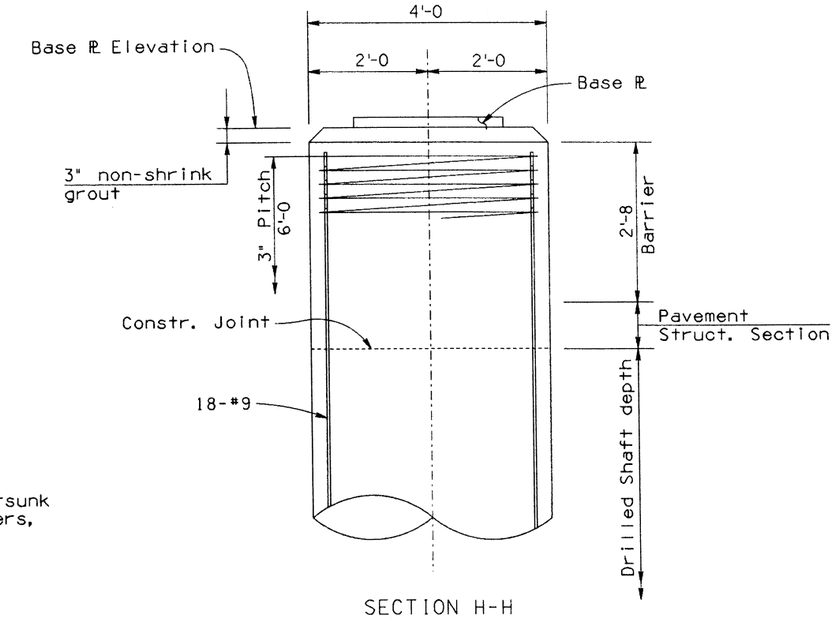

SECTION H-H

DESIGN	G.K.	1-92	NO	DESCRIPTION OF REVISIONS	MADE BY	DATE
DRAWN	C.H. & J.N.	2-92	1			
CHECKED	S.H.	2-92	2			
			3			
			4			

REGISTERED PROFESSIONAL ENGINEER (CIVIL) CERTIFICATE NO. 9910 F. DANIEL DAVIS DATE SIGNED 6-14-92 ARIZONA U.S.A.	DESIGN APPROVED F. Daniel Davis	ARIZONA DEPARTMENT OF TRANSPORTATION HIGHWAYS DIVISION STANDARD DRAWINGS
	APPROVED FOR DISTRIBUTION August Scott	TUBULAR SIGN STRUCTURES MISC. DETAILS

REVISION

STANDARD NO. B-40.60

ZF1:(051020)SB4060.DGN;1
11-MAY-1992 09:07
VIEW NAME: