Skew ∡	Θ_1	Θ_2
25°	65°	45°
30°	60°	40°
35°	55°	35°
40°	50°	30°
45°	45°	25°

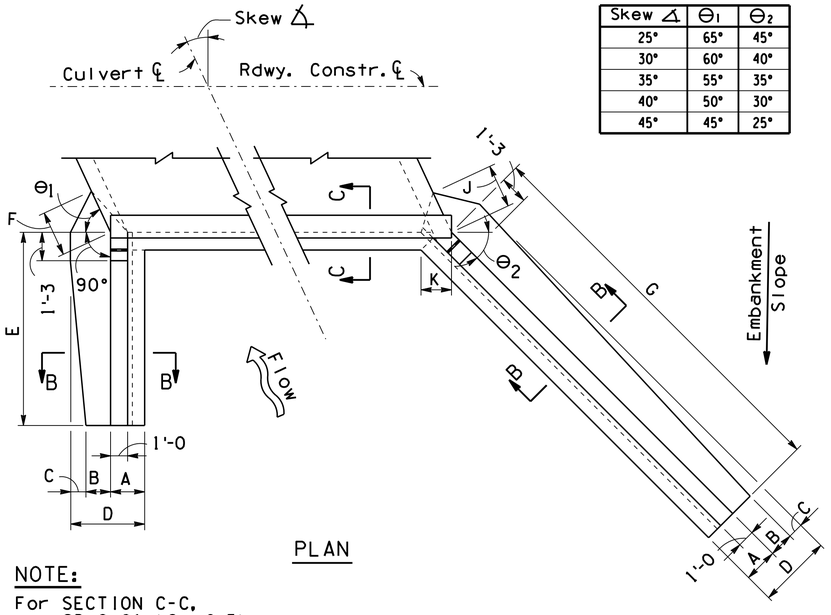

PLAN

NOTE:

For SECTION C-C, see SD 6.01 (2 of 5).

	Skew ∡	25°					30°					35°					40°					45°				
	Height H	8'	9'	10'	11'	12'	8'	9'	10'	11'	12'	8'	9'	10'	11'	12'	8'	9'	10'	11'	12'	8'	9'	10'	11'	12'
2 : 1 Slope Dimensions	A	2'-0	2'-1	2'-2	2'-3	2'-4	2'-0	2'-1	2'-2	2'-3	2'-4	2'-0	2'-1	2'-2	2'-3	2'-4	2'-0	2'-1	2'-2	2'-3	2'-4	2'-0	2'-1	2'-2	2'-3	2'-4
	B	1'-4	1'-5	1'-6	1'-7	1'-8	1'-4	1'-5	1'-6	1'-7	1'-8	1'-4	1'-5	1'-6	1'-7	1'-8	1'-4	1'-5	1'-6	1'-7	1'-8	1'-4	1'-5	1'-6	1'-7	1'-9
	C	2'-2	2'-7	3'-0	3'-8	4'-5	2'-3	2'-8	3'-1	3'-9	4'-7	2'-4	2'-9	3'-2	3'-11	4'-9	2'-5	2'-10	3'-4	4'-1	4'-11	2'-6	2'-11	3'-5	4'-2	5'-0
	D	5'-6	6'-1	6'-8	7'-6	8'-5	5'-7	6'-2	6'-9	7'-7	8'-7	5'-8	6'-3	6'-10	7'-9	8'-9	5'-9	6'-4	7'-0	7'-11	8'-11	5'-10	6'-5	7'-1	8'-0	9'-1
	E	13'-0	14'-6	15'-6	17'-0	18'-6	12'-0	13'-6	15'-0	16'-0	17'-6	11'-6	13'-0	14'-0	15'-6	16'-6	11'-0	12'-6	13'-6	15'-0	16'-0	11'-0	12'-0	13'-0	14'-6	15'-6
	F	4'-4	5'-0	5'-8	6'-8	7'-9	4'-7	5'-3	5'-11	7'-0	8'-3	4'-10	5'-6	6'-2	7'-4	8'-8	5'-0	5'-8	6'-6	7'-8	9'-0	5'-1	5'-10	6'-8	7'-10	9'-3
	G	17'-6	19'-6	21'-0	23'-0	25'-0	18'-6	20'-6	22'-6	24'-6	26'-6	20'-0	22'-0	24'-6	26'-6	28'-6	21'-6	24'-0	26'-6	29'-0	31'-0	24'-0	26'-6	29'-0	31'-6	34'-6
	J	4'-2	4'-10	5'-5	6'-5	7'-6	4'-3	4'-11	5'-7	6'-6	7'-8	4'-5	5'-0	5'-8	6'-9	7'-11	4'-6	5'-2	5'-11	6'-11	8'-2	4'-7	5'-3	6'-0	7'-1	8'-4
	K	2'-0⅞	2'-2⅜	2'-3¾	2'-5⅛	2'-6⅝	2'-2⅝	2'-4⅛	2'-5¾	2'-7¼	2'-8⅞	2'-5	2'-6¾	2'-8½	2'-10¼	3'-0	2'-8⅜	2'-10⅜	3'-0⅜	3'-2⅜	3'-4⅜	3'-1½	3'-3⅞	3'-6¼	3'-8⅝	3'-11
	L	2'-7	2'-10	3'-4	3'-7	3'-10	3'-1	3'-4	3'-7	4'-1	4'-4	3'-4	3'-7	4'-1	4'-4	4'-10	3'-7	3'-10	4'-4	4'-7	5'-1	3'-7	4'-1	4'-7	4'-10	5'-4
	M	2'-11	3'-2	3'-8	3'-11	4'-3	3'-1	3'-6	3'-10	4'-2	4'-7	3'-4	3'-9	4'-0	4'-6	4'-11	3'-8	4'-1	4'-5	4'-10	5'-4	4'-0	4'-6	4'-11	5'-5	5'-9

	Skew ∡	25°					30°					35°					40°					45°				
	Height H	8'	9'	10'	11'	12'	8'	9'	10'	11'	12'	8'	9'	10'	11'	12'	8'	9'	10'	11'	12'	8'	9'	10'	11'	12'
4 : 1 Slope Dimensions	A	2'-0	2'-1	2'-2	2'-3	2'-4	2'-0	2'-1	2'-2	2'-3	2'-4	2'-0	2'-1	2'-2	2'-3	2'-4	2'-0	2'-1	2'-2	2'-3	2'-4	2'-0	2'-1	2'-2	2'-3	2'-4
	B	1'-4	1'-5	1'-6	1'-7	1'-8	1'-4	1'-5	1'-6	1'-7	1'-9	1'-4	1'-5	1'-6	1'-9	1'-11	1'-4	1'-6	1'-9	1'-11	2'-2	1'-6	1'-9	2'-0	2'-3	2'-5
	C	1'-10	2'-2	2'-6	3'-1	3'-9	1'-10	2'-2	2'-7	3'-1	3'-8	1'-11	2'-3	2'-7	2'-11	3'-7	1'-11	2'-2	2'-4	2'-10	3'-4	1'-9	1'-11	2'-1	2'-6	3'-2
	D	5'-2	5'-8	6'-2	6'-11	7'-9	5'-2	5'-8	6'-3	6'-11	7'-9	5'-3	5'-9	6'-3	6'-11	7'-10	5'-3	5'-9	6'-3	7'-0	7'-10	5'-3	5'-9	6'-3	7'-0	7'-11
	E	20'-0	22'-0	24'-0	22'-6	28'-6	18'-6	20'-6	22'-6	24'-6	26'-6	17'-0	19'-0	20'-6	22'-6	24'-6	16'-0	17'-6	19'-6	21'-0	23'-0	15'-0	17'-0	18'-6	20'-0	22'-0
	F	3'-11	4'-5	5'-0	5'-11	6'-11	4'-0	4'-7	5'-3	6'-1	7'-1	4'-3	4'-10	5'-5	6'-2	7'-4	4'-3	4'-10	5'-5	6'-5	7'-5	4'-3	4'-10	5'-6	6'-5	7'-7
	G	26'-0	29'-0	32'-0	35'-0	37'-6	27'-6	30'-6	33'-6	36'-6	39'-6	29'-0	32'-0	35'-6	38'-6	41'-6	30'-6	34'-0	37'-6	41'-0	44'-0	33'-0	36'-6	40'-0	43'-6	47'-6
	J	3'-9	4'-3	4'-10	5'-8	6'-8	3'-9	4'-3	4'-11	5'-8	6'-8	3'-10	4'-5	4'-11	5'-8	6'-9	3'-10	4'-5	4'-11	5'-9	6'-9	3'-10	4'-5	4'-11	5'-9	6'-10
	K	2'-0⅞	2'-2⅜	2'-3¾	2'-5⅛	2'-6⅝	2'-2⅝	2'-4⅛	2'-5¾	2'-7¼	2'-8⅞	2'-5	2'-6¾	2'-8½	2'-10¼	3'-0	2'-8⅜	2'-10⅜	3'-0⅜	3'-2⅜	3'-4⅜	3'-1½	3'-3⅞	3'-6¼	3'-8⅝	3'-11
	L	4'-1	4'-7	5'-1	5'-5	5'-11	4'-5	4'-11	5'-5	5'-11	6'-5	4'-10	5'-4	5'-11	6'-5	6'-11	5'-1	5'-8	6'-2	6'-10	7'-4	5'-4	5'-10	6'-5	7'-1	7'-7
	M	4'-6	4'-11	5'-5	5'-11	6'-5	4'-8	5'-2	5'-8	6'-2	6'-9	4'-11	5'-6	6'-0	6'-7	7'-1	5'-3	5'-10	6'-5	6'-11	7'-7	5'-7	6'-2	6'-10	7'-6	8'-1

	Skew ∡	25°	30°	35°	40°	45°
	Height H	8'	8'	8'	8'	8'
6 : 1 Slope Dimensions	A	2'-0	2'-0	2'-0	2'-0	2'-0
	B	1'-4	1'-4	1'-6	1'-8	1'-10
	C	1'-9	1'-9	1'-7	1'-5	1'-3
	D	5'-1	5'-1	5'-1	5'-1	5'-1
	E	24'-0	22'-0	20'-0	18'-6	17'-6
	F	3'-9	3'-11	4'-0	4'-0	4'-1
	G	31'-6	32'-6	34'-0	35'-6	37'-6
	J	3'-8	3'-8	3'-8	3'-8	3'-8
	K	2'-0⅞	2'-2⅝	2'-5	2'-8⅜	3'-1½
	L	5'-1	5'-5	5'-9	6'-0	6'-2
	M	5'-4	5'-7	5'-10	6'-1	6'-5

Skew ∡	'e' Bars Span 8'	10'	12'
25° to 30°	#6	#6	#7
35°	#6	#7	#8
40° & 45°	#6	#7	#9

Height H	Short Wing 'a' Bars	'b' Bars	Long Wing 'a' Bars	'b' Bars
8'	#4	#5	#6	#5
9'	#5	#5	#6	#5
10'	#6	#5	#6	#5
11'	#6	#5	#6	#5
12'	#6	#6	#7	#7

	Height H	'c' Bars Long Wing Skew ∡ 25°	30°	35°	40°	45°	Dim 'X'	Short Wing All Skew ∡	Dim. 'X'	•'d' Bars Long Wing All	Short Wing Skew ∡
2 : 1 Slope	8'	4 -#5	4 -#5	5 -#5	5 -#5	6 -#5	2'-3	-	-	-	-
	9'	6 -#5	7 -#5	8 -#5	9 -#5	10 -#5	3'-3	2 -#5	2'-3	4 -#5	-
	10'	9 -#7	10 -#7	11 -#7	13 -#7	15 -#7	6'-0	4 -#5	3'-3	8 -#5	-
	11'	11 -#7	12 -#7	14 -#7	16 -#7	19 -#7	7'-0	6 -#6	4'-3	13	3 -#5
	12'	7 -#7	8 -#7	9 -#7	10 -#7	12 -#7	5'-3	6 -#6	4'-6	9 -#7	5 -#5
4 : 1 Slope	8'	3 -#5	4 -#5	4 -#5	5 -#5	5 -#5	2'-3	-	-	-	-
	9'	8 -#5	9 -#5	10 -#5	11 -#5	13 -#5	2'-6	4 -#5	2'-3	-	-
	10'	14 -#6	15 -#6	17 -#6	19 -#6	23 -#6	3'-9	8 -#5	3'-3	-	-
	11'	19 -#7	21 -#7	24 -#7	27 -#7	31 -#7	6'-3	12 -#6	4'-3	10 -#5	5 -#5
	12'	10 -#5	11 -#5	12 -#5	14 -#5	16 -#5	2'-9	12 -#6	4'-6	8 -#5	8 -#5

• 'd' bars alternate with 'a' bars at high end of wall.

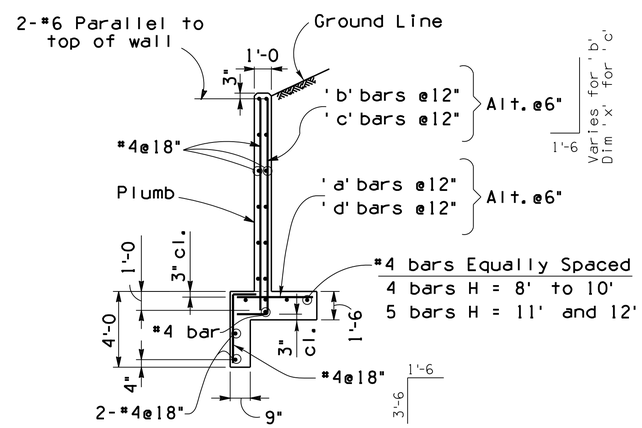

SECTION B-B

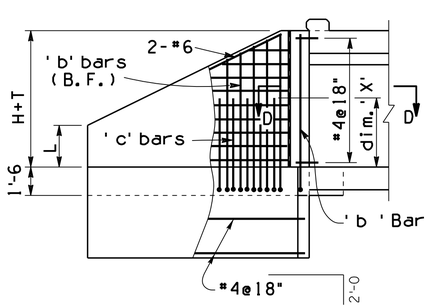

SHORT WING ELEVATION

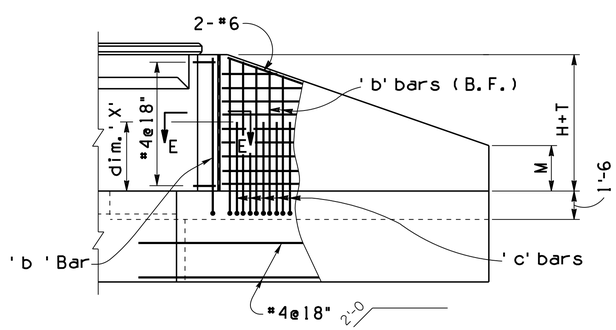

LONG WING ELEVATION

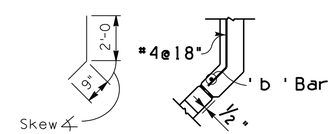

SECTION D-D

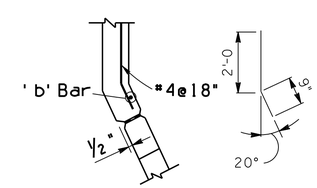

SECTION E-E

NOTE:

For General Notes, Dimensions, and additional Details, see SD 6.01 (2 of 5). For Headwall Quantities see SD 6.09 (1 to 3).

Note to Designer:
The information presented in this Standard Detail has been prepared in accordance with recognized engineering principles and is for general use. It should not be used for specific application without competent professional examination and verification of its suitability and applicability by a licensed professional engineer. Contents within the Inner border line shall not be altered.

NO	DESCRIPTION OF REVISIONS	MADE BY	DATE
1	Original Issue	S.J.H.	2-12
2			
3			
4			

DESIGN APPROVED: Shafi U. Hasan

APPROVED FOR DISTRIBUTION: Jean A. Nehme

ARIZONA DEPARTMENT OF TRANSPORTATION
INFRASTRUCTURE DELIVERY AND OPERATIONS DIVISION
BRIDGE GROUP STRUCTURE DETAIL

REINFORCED CONCRETE BOX CULVERTS
INLET WINGS - SKEW 25° to 45°
CULVERT HEIGHT 8' to 12'

ROUTE | PROJECT NO. | FA NO. | DRAWING NO. SD 6.08 (8 of 8)

LOCATION | SHEET NO. OF