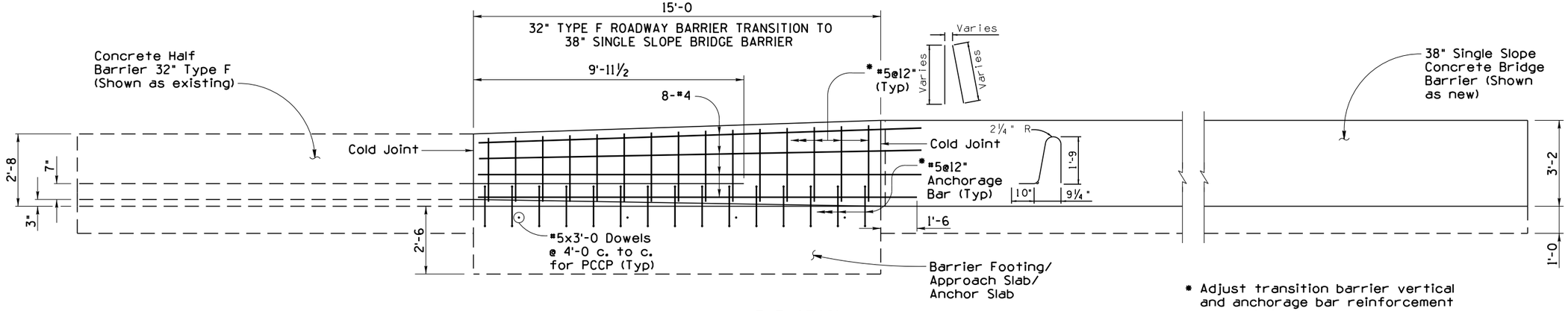

* Adjust transition barrier vertical and anchorage bar reinforcement as needed

ELEVATION

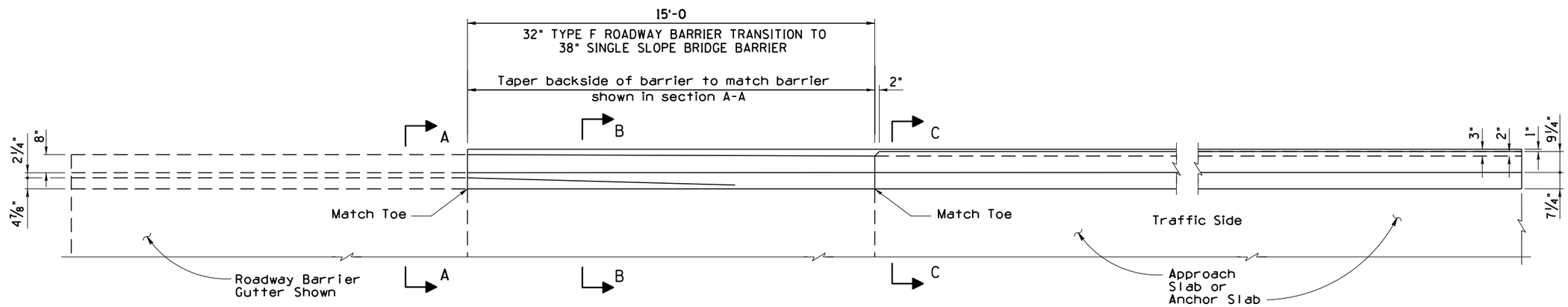

PLAN

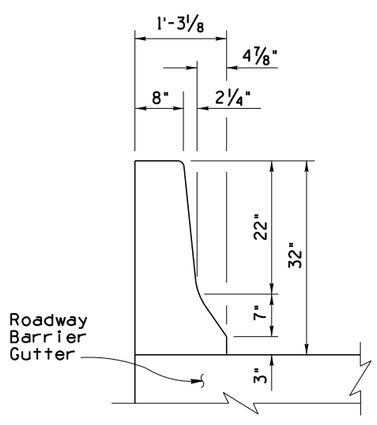

SECTION A-A

See Roadway Standards for reinforcement

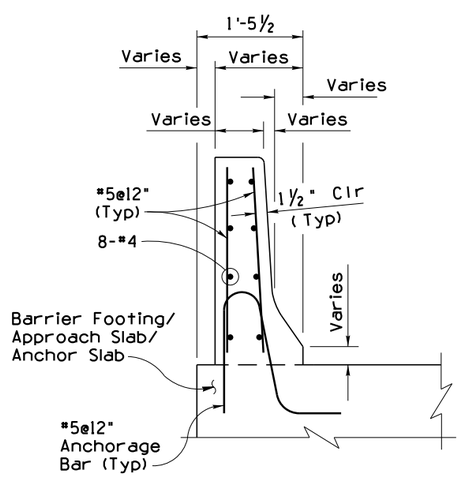

SECTION B-B

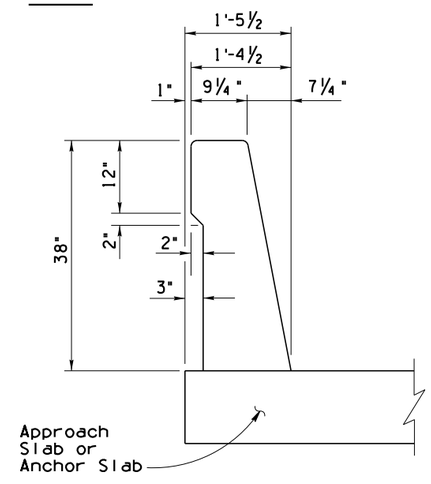

SECTION C-C

See SD 1.10 (1 of 2) for reinforcement

Item	32" Type F Roadway Barrier Transition To 38" Single Slope Bridge Barrier
Item No.	6011142
Measurement	Linear Foot

STANDARDS ENGINEER
A. ALZUBI
RECOMMENDED FOR APPROVAL
GROUP MANAGER
D. EBERHART
APPROVED
STANDARDS COMMITTEE APPROVED FOR DISTRIBUTION 01/20 DATE

ARIZONA DEPARTMENT OF TRANSPORTATION
INFRASTRUCTURE DELIVERY AND OPERATIONS DIVISION
BRIDGE GROUP STANDARD DRAWING

32" TYPE F ROADWAY BARRIER TRANSITION TO 38" SINGLE SLOPE BRIDGE BARRIER

DRAWING NO. SD 1.20

PRIOR DISTRIBUTION DATE

Note to Designer:
The information presented in this Standard Drawing has been prepared in accordance with recognized engineering principles and is for general use. It should not be used for specific application without competent professional examination and verification of its suitability and applicability by a licensed professional engineer. Contents within the inner border line shall not be altered.