OWNERSHIP RECORD / ACQUISITION RECORD

PARCEL NUMBER	OWNER	DESCRIPTION	TOTAL AREA	AREA REQUIRED: GROSS INCLUDING EXISTING R/W	AREA REQUIRED: NET EXCLUDING EXISTING R/W	EASEMENT AREA	REMAINDER: LEFT	REMAINDER: RIGHT	SHEET NO.	CHIEF R/W AGENT APPROVAL	INSTRUMENT: TYPE	INSTRUMENT: DATE	RECORDED: DATE	RECORDED: DOCUMENT
14-0966	CIRCLE K STORES INC.	PT OF THE S.W.1/4, OF THE S.W1/4SEC 27 T8S, R22W	31,650 ±	9,308 ±	158 ±		22,342 ±		1		FOC	2-27-01	6-11-04	2004-21302
14-0967	SHAY OIL COMPANY, INC.	PT OF THE S.E.1/4, OF THE S.E.1/4, OF SEC 28, T8S, R22W	103,528 ±	16,759 ±	351 ±		86,769 ±		1		WD	8-23-00	2-15-01	2001-03966
14-0968	MARK R. AND CAROLINE L. SMITH	PT OF THE N.E.1/4, OF THE N.E.1/4 SEC 33 T8S, R22W	1,701,882 ±	66,358 ±	480 ±			1,635,524 ±	1		WD	8-24-00	7-10-01	2001-19057
14-0969	ESTHER B. WHITMAN, CO-TRUSTEE	PT N.W.1/4, N.W1/4, AND THE S.W.1/4 OF SEC 34, T8S, R22W	16,836,143 ±	397,241 ±	82 ±			16,438,902 ±	1		WD	8-22-00	5-23-01	2001-14055

UPDATED ACQ. RECORD. PM-15-088, (TSS) 2/1/16

INDEX TO EXISTING R/W

IND.	SUBDIVISION	SEC.	TWP.	R.	ACQ. FROM	TYPE	F/E	BK./DKT.	PAGE	WIDTH	YEAR	PARCEL NO.
1	Pt SW1/4, SW1/4	27	8S	22W	NOT DISCLOSED IN DOCUMENT	ESMT	--	BK. 8 OF MISC.	208	33	1913	667
2	Pt SW1/4, SW1/4	27	8S	22W	N. H. AND LEE SEE LEONG	ESMT	--	DKT-185	271	17	1956	667
3	Pt SW1/4, SW1/4	27	8S	22W	NOT DISCLOSED IN DOCUMENT	ESMT	--	DKT-641	301	33	1956	667
4	Pt of SE1/4, SE1/4	28	8S	22W	H.C. & GERTURE HAUPT	ESMT	--	BK. 39 OF DDS	172	33	1914	666
5	Pt of SE1/4, SE1/4	28	8S	22W	JAMES H. & MARY L. DUNN	ESMT	--	DKT-648	280	33	1971	666
6	Pt of SE1/4, SE1/4	28	8S	22W	HERMAN D. & MILLIE ENGLER	ESMT	--	DKT-182	214	17	1956	666
7	Pt NE1/4, NE1/4	33	8S	22W	NOT DISCLOSED IN DOCUMENT	ESMT	--	BK. 39 OF DDS	173	33	1914	666
8	Pt NE1/4, NE1/4	33	8S	22W	JOHN BRITZ, JR.	ESMT	--	DKT-191	78	17	1957	684
9	Pt NE1/4, NE1/4	33	8S	22W	A.R.S. 28-7041-C	ESMT	--	FEE NO. 3120	---	30	1924	666
10	Pt NW1/4, NW1/4	34	8S	22W	A.R.S. 28-7041-C	ESMT	--	BK. 8 OF MISC.	376	33	1913	683
11	Pt NW1/4, NW1/4	34	8S	22W	SHATTUCK & WHITMAN	ESMT	--	DKT-182	220	17	1956	683
12	Pt NW1/4, NW1/4	34	8S	22W	A.R.S. 28-7041-C	ESMT	--	FEE NO. 3120	---	30	1924	683

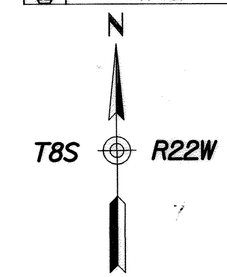

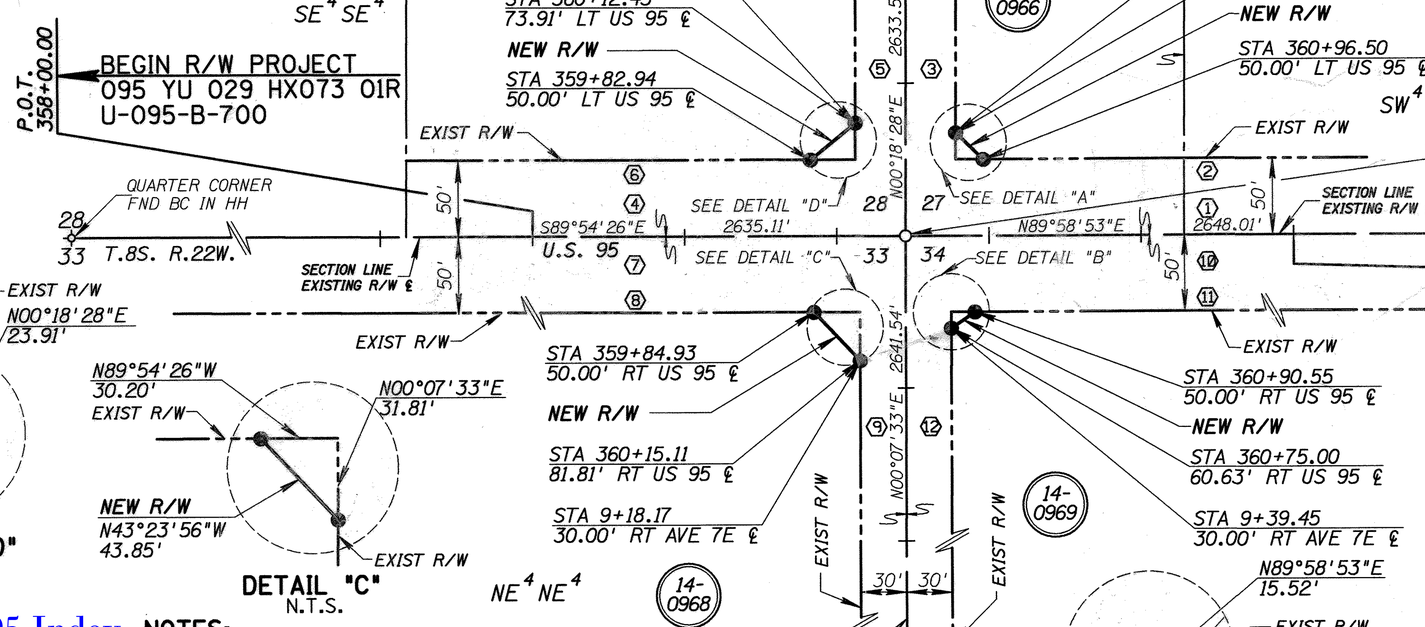

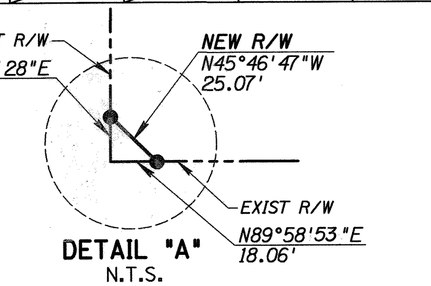

DETAIL "A"
N.T.S.

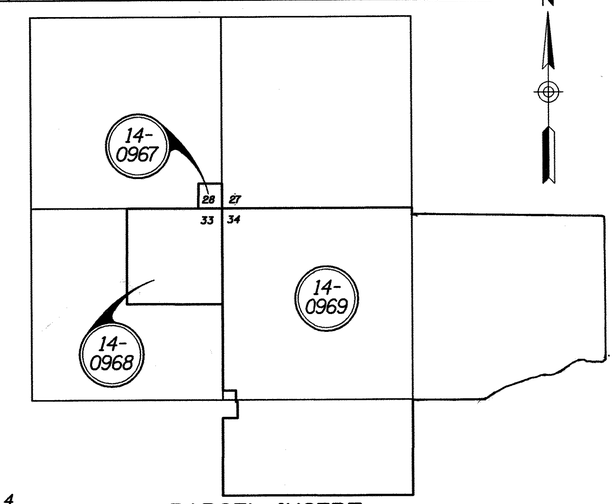

PARCEL INSERT
N.T.S.

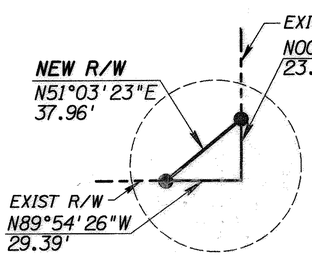

DETAIL "D"
N.T.S.

DETAIL "C"
N.T.S.

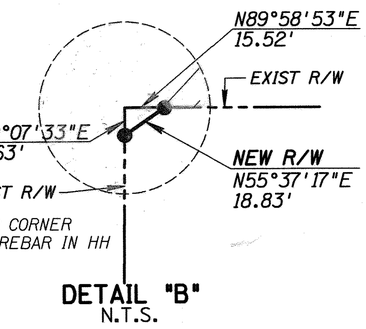

DETAIL "B"
N.T.S.

ARIZONA DEPARTMENT OF TRANSPORTATION BOARD APPROVED FOR RIGHT OF WAY ACQUISITION IN ACCORDANCE WITH RESOLUTION 2000-06-A-051 DATED 5-22-2000
EDWARD DICK WRIGHT STATE ENGINEER

E. Hansen — CHIEF R/W AGENT — 1-22-01 DATE

DETAIL SHEET

Click here for US 95 Index

NOTES:

1. THE BOUNDARIES SHOWN ON THESE PLANS ARE BASED UPON RECORD DATA, THEREFORE, ALL BOUNDARY LINES MUST BE CONSIDERED AS APPROXIMATE. AN ACTUAL FIELD SURVEY MAY PRODUCE DIFFERENT RESULTS THAN SHOWN ON THESE PLANS.

2. TOTAL AREA IS CALCULATED FROM TITLE INFORMATION, HENCE IT IS AN APPROXIMATION. AREAS SHOW IN OWNERSHIP RECORD ARE ROUNDED AND APPROXIMATE VALUES.

3. SECTION CORNER, BEARING AND DISTANCE INFORMATION OBTAINED FROM AZTEC ENGINEERING DESIGN PLANS.

PUBLIC HEARING REQUIREMENTS CERTIFIED	N/A
ENVIRONMENTAL CLEARANCE	7/17/2000
C & S REVIEW	
BID SET REVIEW	

DRAWING NO.	D-14-T-381
HARD COPY	
DRAWN/DATE	GDS,DR/JULY, 2000
CHECKED	D. SCHLIEF
ROUTE	U.S. 95

RBF CONSULTING — PLANNING ■ DESIGN ■ CONSTRUCTION — 16605 NORTH 28TH AVENUE, SUITE 100, PHOENIX, ARIZONA 85053-7640, 602.957.2050 • FAX 602.957.2051 • www.RBF.com

ARIZONA DEPARTMENT OF TRANSPORTATION
INTERMODAL TRANSPORTATION DIVISION
RIGHT OF WAY PLANS SECTION

HIGHWAY: YUMA-QUARTZSITE HIGHWAY
PROJECT NO.: U-095-B-700
TRACS NO.: 095 YU 029 HX073 01R
SECTION: US 95 @ AVENUE 7E

REGISTERED LAND SURVEYOR — CERTIFICATE NO. 31034 — DAVID M. SCHLIEF — ARIZONA, U.S.A. — 11/17/00

SHEET 1 OF 1

07 NOV 2000 09:11:45 h:\pdata\45100443\dgn\dlv\443-w002.dgn