OWNERSHIP RECORD / ACQUISITION RECORD

PARCEL NUMBER	OWNER	DESCRIPTION	TOTAL AREA	AREA REQUIRED: GROSS INCLUDING EXISTING R/W	AREA REQUIRED: NET EXCLUDING EXISTING R/W	EASEMENT AREA	REMAINDER: LEFT	REMAINDER: RIGHT	SHEET NO.	CHIEF R/W AGENT APPROVAL	INSTRUMENT: TYPE	INSTRUMENT: DATE	RECORDED: DATE	RECORDED: DOCUMENT
14-0970	MARK R. SMITH, ET UX	PT OF N.E. 1/4 & N.W. 1/4 SEC 33	17,704.413±	523.578 ±	650 ±			17,180.835±	1		WD	8/24/00	8/21/01	2001-23044

INDEX TO EXISTING R/W

IND.	SUBDIVISION	SEC.	TWP.	R.	ACO. FROM	TYPE	F/E	BK./DKT.	PAGE	WIDTH	YEAR	PARCEL NO.
1	Pt of NE¼, NE¼	33	8S	22W	NOT DISCLOSED IN DOCUMENT	ESMT	--	DKT-39	173	33	1913	684
2	Pt of NE¼, NE¼	33	8S	22W	JOHN BRITZ, J.R.	ESMT	--	DKT-405	198	17	1957	684
3	Pt of NE¼, NE¼	33	8S	22W	YUMA COUNTY BOARD OF SUPERVISORS	ESMT	--	DKT-405	198	33	1965	684
4	Pt of NW¼, NW¼	33	8S	22W	YUMA COUNTY BOARD OF SUPERVISORS	ESMT	--	DKT-405	198	33	1965	684
5	Pt of NW¼, NW¼	33	8S	22W	NOT DISCLOSED IN DOCUMENT	ESMT	--	DKT-39	173	33	1913	684
6	Pt of NW¼, NW¼	33	8S	22W	JOHN BRITZ, J.R.	ESMT	--	DKT-405	198	17	1957	684

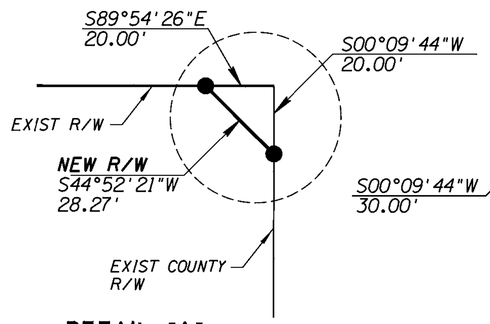

DETAIL "A"
N.T.S.

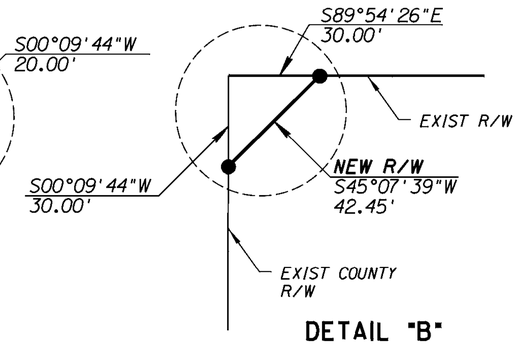

DETAIL "B"
N.T.S.

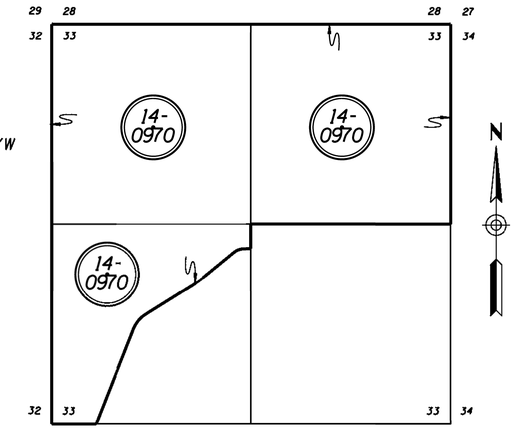

PARCEL INSERT
N.T.S.

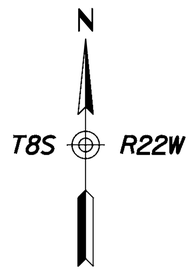

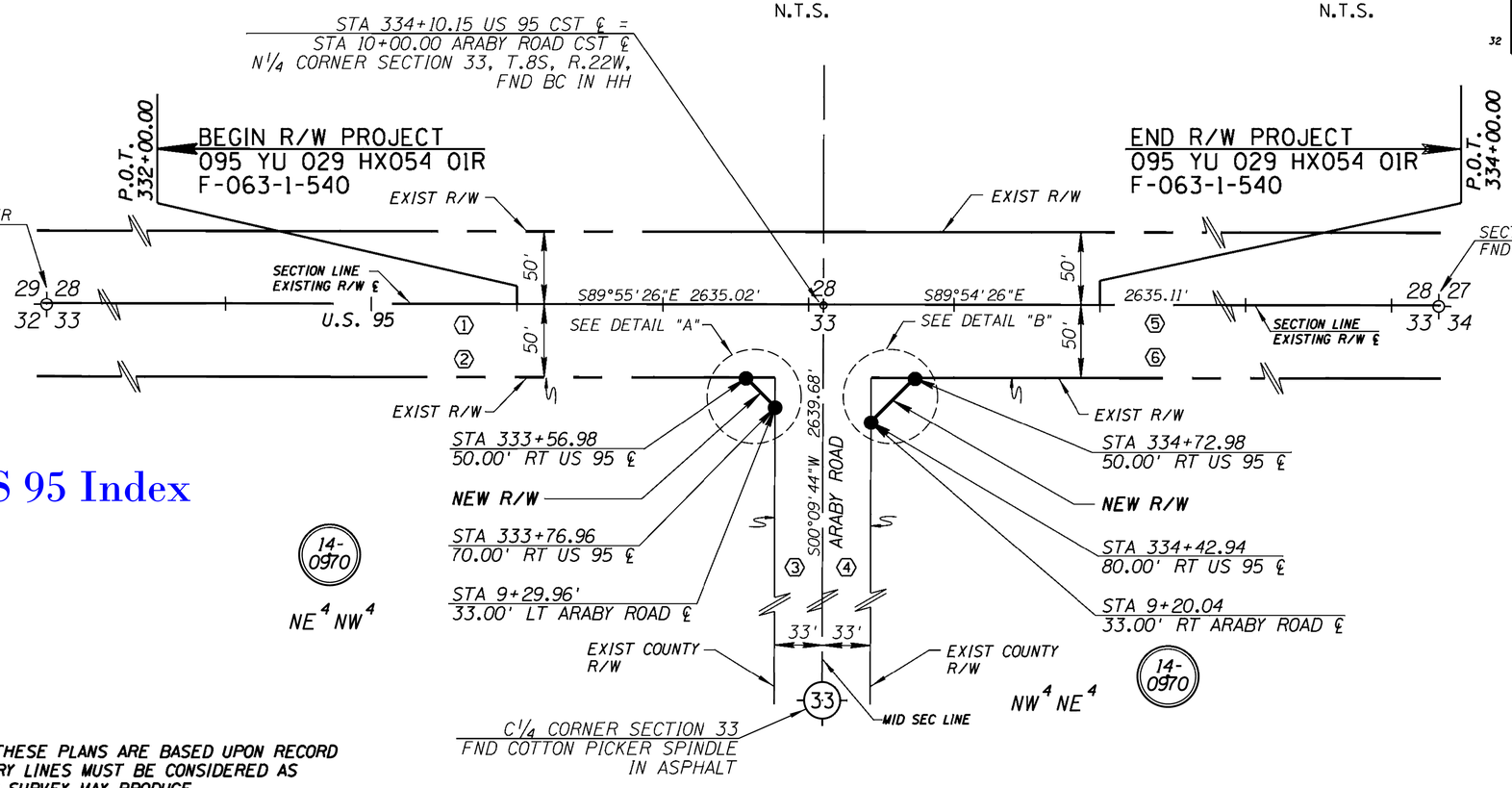

Click here for US 95 Index

PUBLIC HEARING REQUIREMENTS CERTIFIED	N/A
ENVIRONMENTAL CLEARANCE	12/17/1998
C & S REVIEW	
BID SET REVIEW	

ARIZONA DEPARTMENT OF TRANSPORTATION BOARD
APPROVED FOR RIGHT OF WAY ACQUISITION IN ACCORDANCE
WITH RESOLUTION 2000-07-A-062 DATED 7-21-2000
EDWARD DICK WRIGHT STATE ENGINEER

CHIEF R/W AGENT DATE

DETAIL SHEET

NOTES:

1. THE BOUNDARIES SHOWN ON THESE PLANS ARE BASED UPON RECORD DATA, THEREFORE, ALL BOUNDARY LINES MUST BE CONSIDERED AS APPROXIMATE. AN ACTUAL FIELD SURVEY MAY PRODUCE DIFFERENT RESULTS THAN SHOWN ON THESE PLANS.

2. TOTAL AREA WAS SCALED AND DIGITIZED BASED ON AN ASSESSOR'S MAP, HENCE IT IS AN APPROXIMATION. AREAS SHOW IN OWNERSHIP RECORD ARE ROUNDED AND APPROXIMATE VALUES.

3. SECTION CORNER, BEARING AND DISTANCE INFORMATION OBTAINED FROM NICKLAUS ENGINEERING RIGHT OF WAY ACQUISTION MAP ROTATED TO MATCH AZTEC ENGINEERING DESIGN PLANS.

CHANGE ORDER REVISIONS

C.O. NO.	DATE	BY	DESCRIPTION OF REVISIONS
PM-15-088	2/1/16	TSS	UPDATED ACQ. RECORD AND CHANGED
"	"	"	DRAWING NUMBER.

DRAWING NO.	D-14-T-382
HARD COPY	
DRAWN/DATE	DR JULY 2000
CHECKED	D. SCHLIEF
ROUTE	U.S. 95
SECTION	US 95 @ ARABY ROAD

RBF CONSULTING — PLANNING ■ DESIGN ■ CONSTRUCTION
16666 NORTH 28TH AVENUE, SUITE 100 PHOENIX, ARIZONA 85053-7550
602.467.2200 • FAX 602.467.2205 • www.RBF.com

ARIZONA DEPARTMENT OF TRANSPORTATION
INTERMODAL TRANSPORTATION DIVISION
RIGHT OF WAY PLANS SECTION

HIGHWAY: YUMA-QUARTZSITE HIGHWAY
PROJECT NO. F-063-1-540
TRACS NO. 095 YU 029 HX054 01R

REGISTERED LAND SURVEYOR — CERTIFICATE 31034 — DAVID M. SCHLIEF — ARIZONA, U.S.A.

SHEET 1 OF 1

$DATE$ $TIME$ $FILE$

ccccccSYSTIMEccccc cccccDGNcSPECIFICATIONccccc