Click here for SR 80 Index

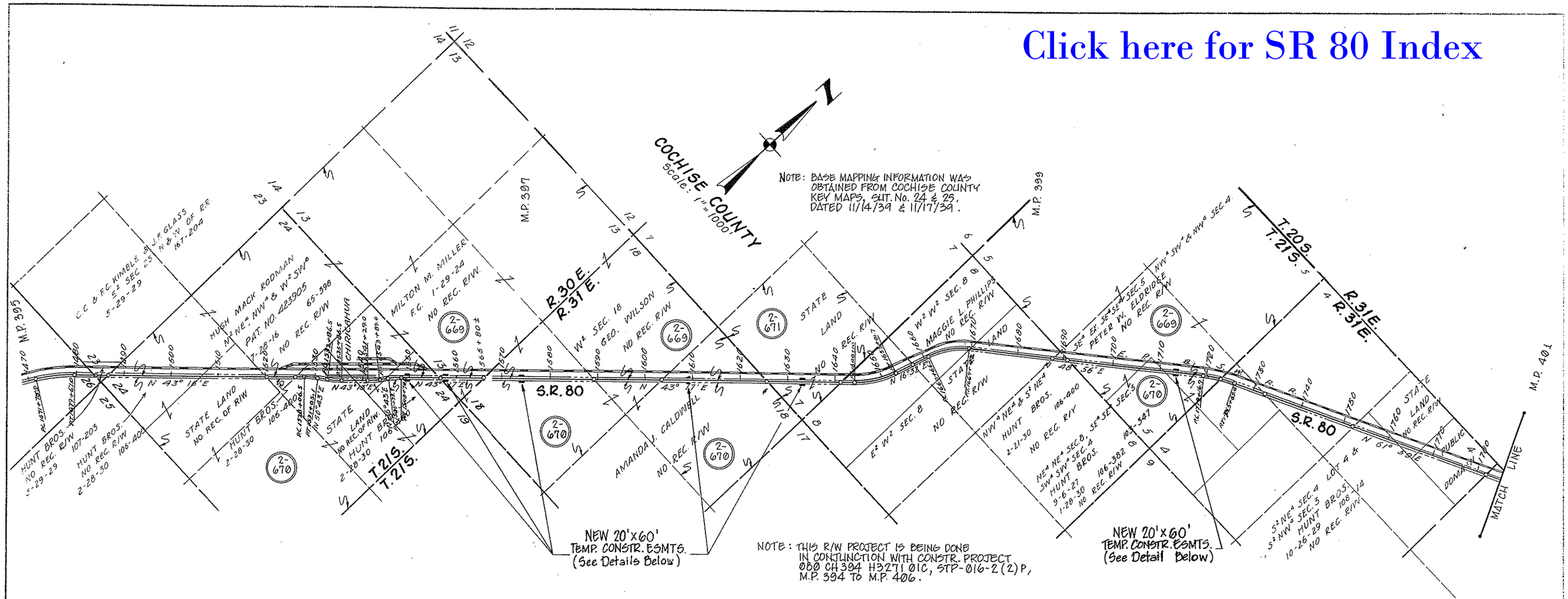

NOTE: THIS R/W PROJECT IS BEING DONE IN CONJUNCTION WITH CONSTR. PROJECT 080 CH 394 H3271 01C, STP-016-2(2)P, M.P. 394 TO M.P. 406.

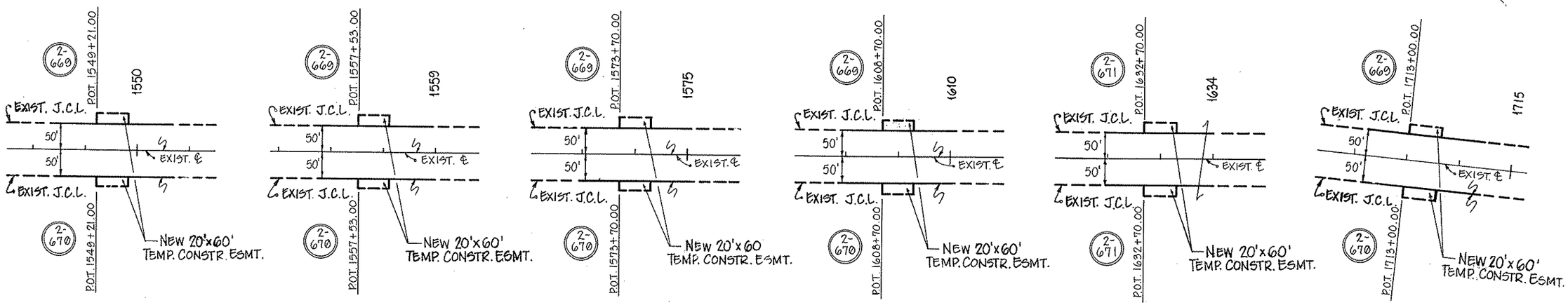

Details
Scale: 1" = 100'

BID SET REVIEW 4-15-94.

APPROVED FOR RIGHT OF WAY ACQUISITION
Robert Helmen Dalton 2-7-94
CHIEF RIGHT OF WAY AGENT DATE

Exist. J.C.L. = Existing Jurisdictional Control Limits

REVISIONS					
C.O. NO.	DATE	BY	DESCRIPTION	DRAWING NO.	D-2-T-469
				HARD COPY	—
				DRAWN	H.C.V.
				CHECKED	LME
				COUNTY	COCHISE
				SCALE	(See Above)
				ROUTE S.R.80	LOCATION M.P. 394 - APACHE

TRACS NO. 080 CH 394 H3271 01R
ARIZONA DEPARTMENT OF TRANSPORTATION
HIGHWAYS DIVISION
RIGHT OF WAY PLANS SERVICES
HIGHWAY DOUGLAS - RODEO HWY. (S.R.80)
PROJECT NO. F-016-2-602
SHEET 1 OF 2

ZF1245.143TEST.DGN:1
16-FEB-1989 20:55

OWNERSHIP RECORD / ACQUISITION RECORD

PARCEL NUMBER	OWNER	DESCRIPTION	TOTAL AREA	AREA REQUIRED: GROSS INCLUDING EXISTING R/W	AREA REQUIRED: NET EXCLUDING EXISTING R/W	EASEMENT AREA	REMAINDER: LEFT	REMAINDER: RIGHT	SHEET NO.	BOARD APPROVAL	INSTRUMENT: TYPE	INSTRUMENT: DATE	RECORDED: DATE	RECORDED: DOCUMENT
2-669	JOHNSTON'S FUEL LINERS, INC.	PT. NE4 SEC. 24, T. 21S. R. 30 E.				T.C.E. 1200 ☐			1					
		PT. SE4 SEC. 13, T. 21S. R. 30 E.				T.C.E. 1200 ☐			1					
		PT. SW4 & NE4 SEC. 18, T. 21S. R. 31 E.				T.C.E.'s 2400 ☐			1					
		PT. SE4 SEC. 5, T. 21S. R. 31 E.				T.C.E. 1200 ☐			1					
		PT. NW4 SEC. 13, T. 20S. R. 31 E.				T.C.E. 1200 ☐			2					
2-670	I V BAR RANCH, INC.	PT. NE4 SEC. 24, T. 21S. R. 30 E.				T.C.E. 1200 ☐			1					
		PT. SE4 SEC. 13, T. 21S. R. 30 E.				T.C.E. 1200 ☐			1					
		PT. SW4 & NE4 SEC. 18, T. 21S. R. 31 E.				T.C.E.'s 2400 ☐			1					
		PT. SE4 SEC. 5, T. 21S. R. 30 E.				T.C.E. 1200 ☐			1					
2-671	STATE OF ARIZONA (S.L.D.)	PT. SE4 SEC. 7 T. 21S. R. 31 E.				T.C.E. 2400 ☐			1					
2-672	BEN P. SNURE, JR.	PT. W2 SEC. 13, T. 20S. R. 31 E.				T.C.E. 1200 ☐			2					

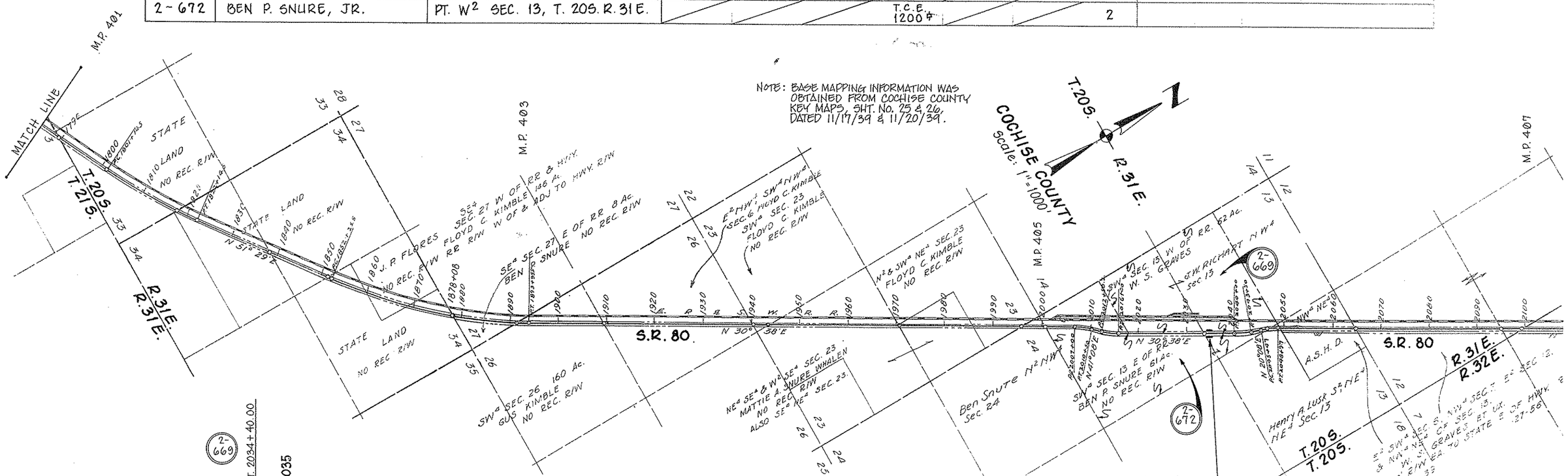

NOTE: BASE MAPPING INFORMATION WAS OBTAINED FROM COCHISE COUNTY KEY MAPS, SHT. No. 25 & 26, DATED 11/17/39 & 11/20/39.

NOTE: THIS R/W PROJECT IS BEING DONE IN CONJUNCTION WITH CONSTR. PROJECT 080 CH 394 H3271 01C, STP-016-2 (2) P, M.P. 394 TO M.P. 406.

NEW 20' x 60' TEMP. CONSTR. ESMTS. (See Detail Below)

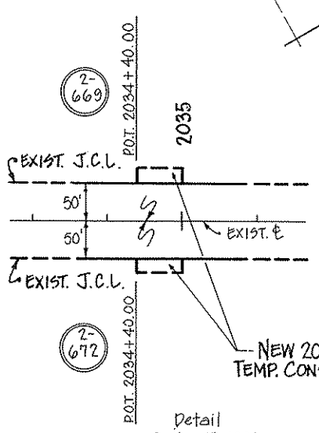

Detail
Scale: 1" = 100'

Exist. J.C.L. = Existing Jurisdictional Control Limits

Click here for SR 80 Index

REVISIONS		
C.O. NO.	DATE	DESCRIPTION

DRAWING NO.	D-2-T-469
HARD COPY	
DRAWN	H.C.V.
CHECKED	LMF
COUNTY	COCHISE
SCALE	(SEE ABOVE)
ROUTE	S.R. 80
LOCATION	M.P. 394 - APACHE

TRACS No. 080 CH 394 H3271 01R

ARIZONA DEPARTMENT OF TRANSPORTATION
HIGHWAYS DIVISION
RIGHT OF WAY PLANS SECTION

HIGHWAY: DOUGLAS - RODEO HWY. (S.R.80)
PROJECT NO. F-016-2-602

SHEET 2 OF 2