Grand Canyon National Park Airport
Drainage Master Plan and Water Use Study
Data Collection and Existing Conditions Analysis Report

ADOT Project No.: ADOT18-00007491
Dibble Engineering Project No.: 1017095

July 30, 2018

Prepared For:

Arizona Department of Transportation

Dibble Engineering

7878 North 16th Street
Suite 300
Phoenix, Arizona 85020
P. 602.957.1155
F. 602.957.2838
www.dibblecorp.com

Table of Contents

SECTION 1.0: EXECUTIVE SUMMARY 1

SECTION 2.0: INTRODUCTION 2

2.1 PROJECT LOCATION 2
2.2 AIRPORT DESCRIPTION 3
2.3 STUDY AUTHORIZATION 3
2.4 STUDY PURPOSE AND SCOPE 3
2.5 PUBLIC OUTREACH PROGRAM 4
2.6 CHRONOLOGY OF PAST WATER AND DRAINAGE SYSTEM IMPROVEMENT PROJECTS 5

SECTION 3.0: DRAINAGE MASTER PLAN DATA COLLECTION 8

3.1 INTRODUCTION 8
3.2 WATERSHED 8
3.3 TOPOGRAPHIC AND AERIAL MAPING 9
3.4 EXISTING LAND USE 9
3.5 HISTORIC DRAINAGE AND FLOODING ISSUES 10
3.6 PREVIOUS STUDIES 12
3.7 FEMA FLOODPLAIN INFORMATION 12
3.8 EXISTING DRAINAGE INFRASTRUCTURE 13

SECTION 4.0: WATER USE STUDY DATA COLLECTION 19

4.1 HISTORIC / EXISTING WATER RIGHTS 19
4.2 EXISTING WATER SUPPLY 19
4.3 EXISTING WATER USE INFORMATION 19
4.4 EXISTING WATER TREATMENT FACILITIES 25
4.5 EXISTING WATER STORAGE FACILITIES 34
4.6 EXISTING RECLAIMED WATER SUPPLY 36
4.7 EXISTING RECLAIMED WATER USE INFORMATION 38

SECTION 5.0: ENVIRONMENTAL DATA COLLECTION 39

5.1 DRAINAGE INFRASTRUCTURE EVALUATION 39
5.2 WATER FACILITIES REGULATORY OBLIGATIONS 40

SECTION 6.0: EXISTING CONDITION ANALYSIS - DRAINAGE 46

6.1 METHOD DESCRIPTION 46
6.2 COMPUTATIONAL DOMAINS AND FLO-2D GRIDS 46
6.3 RAINFALL 46
6.4 INFLOW 47
6.5 RAINFALL LOSSES 47
6.6 AREA REDUCTION FACTOR (ARF) 50
6.7 HYDRAULIC STRUCTURES 50
6.8 MODELING RESULTS 50
6.9 CALIBRATION 52
6.10 DRAINAGE INFRASTRUCTURE PERFORMANCE EVALUATION 54
6.11 RSA AND TSA ENCROACHING DRAINAGE INFRASTRUCTURE 54
6.12 ESTIMATED ANNUAL WATER BUDGET 59

SECTION 7.0: EXISTING CONDITION ANALYSIS – WATER 63

7.1 WATER TREATMENT FACILITIES EVALUATION 63

List of Figures

FIGURE 2.1.1 - LOCATION MAP 2
FIGURE 2.1.2 - VICINITY MAP 3
FIGURE 3.2.1 - STUDY WATERSHED LOCATION AND 10 FOOT CONTOURS 9
FIGURE 3.5.1 - STREAM LINES BASED ON TOPOGRAPHY SHOWS THE TWO MAJOR SUBBASINS WITHIN THE STUDY WATERSHED 10
FIGURE 3.5.2 - STREAM LINES BASED ON TOPOGRAPHY 10
FIGURE 3.5.3 - DRAINAGE CONCERN AREAS NOTED DURING SITE VISIT ON JANUARY 11, 2018 ILLUSTRATES THE LOCATION OF THESE AREAS: 10
FIGURE 3.5.4 - DRAINAGE CONCERN AREAS NOTED DURING SITE VISIT ON JANUARY 11, 2018 11
FIGURE 3.7.1 - FEMA HAZARD ZONES 13
FIGURE 3.8.1 - HYDRAULICALLY SIGNIFICANT HYDRAULIC STRUCTURES AT GCN 14
FIGURE 3.8.2 - DRAINAGE STRUCTURE LOCATIONS 17
FIGURE 4.3.1 - 2014-2017 ANNUAL WATER USAGE BY USER GROUP 22
FIGURE 4.3.2 - MONTHLY WATER USE BY USER GROUP 23
FIGURE 4.3.3 – MONTHLY WATER USE BY USER GROUP (2014-2017) 24
FIGURE 4.3.4 - TOTAL MONTHLY WATER USE 24
FIGURE 4.3.5 - TOTAL ANNUAL WATER USE 25
FIGURE 4.4.1 - EXISTING SYSTEM GENERAL PROCESS FLOW DIAGRAM 26
FIGURE 4.4.2 - CURRENT PROCESS FLOW DIAGRAM 27
FIGURE 4.4.3 - EXISTING STORAGE TANK YARD PIPING 29
FIGURE 4.4.4 - HYDRANT LOCATION & VAULT 8 TIE-IN 31
FIGURE 4.4.5 - VAULT 8, DISTRIBUTION SYSTEM CONNECTION TO STORAGE TANKS 33
FIGURE 4.4.6 - TRIM CHLORINATION SYSTEM 34
FIGURE 4.5.1 - WATER STORAGE TANK LOCATIONS 35
FIGURE 4.6.1 - GCN UTILITY CONNECTIONS LOCATION 36
FIGURE 4.6.2 - GCN UTILITY CONNECTIONS 37
FIGURE 6.5.1 - SPATIAL DISTRIBUTION OF LAND USE CLASSIFICATIONS 48
FIGURE 6.5.2 - SPATIAL DISTRIBUTION OF SOIL CLASSIFICATIONS 49
FIGURE 6.8.1 - DRAINAGE CONCERN AREAS WITH 1-YEAR, 24-HOUR STORM MAXIMUM FLOW DEPTHS 51
FIGURE 6.8.2 - UPSTREAM DRAINAGE AND HIGH DISCHARGE AREAS WITH 10-YEAR, 24-HOUR MAXIMUM FLOW DEPTHS AND CROSS SECTION PEAK DISCHARGES 52
FIGURE 6.9.1 - MAXIMUM FLOW DEPTH CONCERN AREAS IN AIRPORT DOMAIN FOR 10-YEAR 24-HOUR STORM EVENT 53
FIGURE 6.11.1 - CULVERTS REQUIRING RELOCATION (NORTH) 55
FIGURE 6.11.2 - CULVERTS REQUIRING RELOCATION (SOUTH) 57
FIGURE 6.11.3 - MAXIMUM FLOW DEPTHS AROUND RUNWAY AND TAXIWAY FOR 5-YEAR 24-HOUR STORM EVENT 59
FIGURE 6.12.1 - POTENTIAL HARVESTING AREA WITH MAXIMUM DISCHARGE FOR 1-YEAR 24-HOUR STORM EVENT TO SHOWN GENERAL FLOW PATTERN 60
FIGURE 6.12.2 - RAINFALL EVENTS AT GRAND CANYON NATIONAL PARK AIRPORT (NETWORK: GHCND, STATION ID: USW00003195) 62
FIGURE 7.1.1 - GENERAL PROCESS FLOW DIAGRAM 63
FIGURE 7.1.2 - ORIGINAL PROCESS FLOW DIAGRAM 64
FIGURE 7.1.3 - OWS BODY AND PVC BAFFLE 67
FIGURE 7.1.4 - PACKAGE TREATMENT SYSTEM 70
FIGURE 7.1.5 - GAC FILTER AND ASSOCIATED EQUIPMENT 72

List of Tables

TABLE 2.6.1 - PAST POTABLE WATER & DRAINAGE SYSTEM IMPROVEMENTS PROJECTS (1964 - PRESENT).....6
TABLE 3.8.1 - DRAINAGE STRUCTURE INVENTORY 14
TABLE 4.3.1 - MONTHLY WATER USE BY USER GROUP (GALLONS/MONTH) 22
TABLE 4.3.2 - ANNUAL WATER USE BY USER GROUP (GALLONS/YEAR) 22
TABLE 4.3.3 - MAXIMUM MONTHLY WATER USE BY USER GROUP (GALLONS/MONTH) 22
TABLE 4.3.4 - AVERAGE MONTHLY WATER USE BY USER GROUP (GALLONS/MONTH).....23
TABLE 4.5.1 - WATER STORAGE TANK CAPACITIES 35
TABLE 5.2.1 - REGULATIONS GOVERNING THE EXISTING GCN WATER SYSTEM 42
TABLE 5.2.2 - REGULATIONS GOVERNING SURFACE WATER TREATMENT FACILITIES.....43
TABLE 6.3.1 - MODELED MAXIMUM RAINFALL DEPTH OVER BOTH DOMAINS.....47
TABLE 6.5.1 - LAND USE DESCRIPTIONS AND PARAMETERS FOR BOTH DOMAINS.....48
TABLE 6.5.2 - SOIL CLASSIFICATIONS AND PARAMETERS FOR BOTH DOMAINS.....50
TABLE 6.9.1 - INFILTRATION LOSS COMPARISON TO HEC-1 MODELS FOR BOTH DOMAINS 53
TABLE 6.11.1 – AIRSIDE CULVERTS REQUIRING RELOCATION.....54
TABLE 6.12.1 – POTENTIAL WATER AVAILABLE FOR CAPTURE AT GCN 60

Appendices

Appendix A: Referenced Documents

A.1 Grand Canyon National Park Airport Water Supply, Treatment Facility and De-icing System, Operations & Maintenance Manual, March 1999
A.2 Safe Drink Water Act Summary and Statute, US Environmental Protection Agency
A.3 Treatment Rules Regulating the Existing Facility, US Environmental Protection Agency
A.4 ADOT Airport Grand Canyon Water System Violations, Arizona Department of Environmental Quality
A.5 Additional Rules Governing Surface Water Treatment Facilities, US Environmental Protection Agency
A.6 Stormwater Pollution Prevention Plan for Grand Canyon National Airport, October 2017

Appendix B: Field Photography Records

Appendix C: Hydrologic/Hydraulic Analysis Supporting Documentation

(On Compact Disk)

C.1 Hydrology Analysis
C.1.1 USGS Domain – Hydrology Data
C.1.2 Airport Domain – Hydrology Data
C.2 Hydraulic Analysis
C.2.1 USGS Domain – Hydraulic Data
C.2.2 Airport Domain – Hydraulic Data
C.3 FLO-2D Inputs and Outputs
C.3.1 USGS Domain – FLO-2D Inputs and Outputs
C.3.2 Airport Domain – FLO-2D Inputs and Outputs

(Hard Copy)

C.4 FLO-2D Modeling Results Maps
C.5 Water Rights Adjudication Memorandum, March 8, 2018

Appendix D: Existing Water Use Information

D.1 Water Use Tables and Figures
D.2 Water User Location Maps

Appendix E: Planning Advisory Committee

Section 1.0: EXECUTIVE SUMMARY

On behalf of the Arizona Department of Transportation (ADOT) Dibble Engineering (Dibble) is developing a Drainage Master Plan and Water Use Study for the Grand Canyon National Park Airport (Airport or GCN). This first phase in the development of the Drainage Master Plan and Water Use Study is the collection and review of pertinent project information, development of hydrologic/hydraulic surface water modeling, estimation of past potable water use, and the evaluation of the existing water treatment and storage systems at GCN. The completion of these tasks has resulted in the development of this Data Collection and Existing Conditions Analysis Report. This report serves as the basis for the development of the required drainage improvements at GCN to meet current Federal Aviation Administration (FAA) requirements. It will also inform ADOT as to the most appropriate means for providing the additional potable water required for implementation of GCN's new Airport Master Plan.

The hydrologic/hydraulic modeling of GCN and its upstream watershed indicates that a small amount of stormwater runoff flows onto GCN property for storm recurrence intervals less than a 5-year event. The modeling also indicates that flow capacities of the existing GCN's onsite drainage infrastructure complies with current FAA requirements with a few exceptions. However, the location of some infrastructure, notably specific infield drainage culverts, are located within the existing runway and taxiway safety areas and will require relocation.

Based on the hydrologic/hydraulic modeling, an expected annual surface water budget (including rainfall and snowfall) has been developed for three surface water harvesting scenarios. The results indicate that there is sufficient annual precipitation to feasibly capture, store and treat surface water for consumption as potable water to offset additional potable water needs to implement GCN's Airport Master Plan.

GCN's existing (inactive) surface water treatment facility was also evaluated by reviewing original documents, regulatory information, and on-site observations. This review indicates that it may be feasible to restart the facility, but capital improvements will likely be needed from inactivity and changes to its original configuration over time. Methods to properly collect and pre-treat surface water would also be needed. However, the evaluation did not include re-starting the facility; therefore, a more in-depth assessment is needed to develop likely costs for re-activating the facility. If re-activated, GCN water treatment system will require the services of a Grade 3 or Grade 4 Certified Operator.

Finally, a review of the water rights associated with GCN and the upstream watershed was conducted to determine who owns the primary water rights at GCN. A Water Rights Adjudication was conducted which concludes that ADOT has primary rights to all surface water at GCN as well as those that flows to the Rain Tank, a man-made retention basin located at the south end of the GCN runway. A memorandum of this adjudication is included in the **Appendix C** of this report.

Section 2.0: INTRODUCTION

2.1 PROJECT LOCATION

The project is located at the Grand Canyon Nation Park Airport, seven miles from the South Rim of the Grand Canyon and two miles from Grand Canyon National Park Entrance, on approximately 859 acres of land in the Kaibab National Forest, adjacent to the Town of Tusayan in Coconino County, Arizona. **Figure 2.1.1 - Location Map** is provided below.

Figure 2.1.1 - Location Map
Source: Google Earth

GCN's airfield elevation is 6,608.7 feet above Mean Sean Level (MSL) according to the Airport Master Record (form 5010). **Figure 2.1.2 - Vicinity Map** below shows the study area.

Figure 2.1.2 - Vicinity Map

2.2 AIRPORT DESCRIPTION

GCN is owned by the State of Arizona and operated by ADOT and maintained by ADOT's Administrative Services Division. GCN is classified in the FAA's National Plan of Integrated Airport System (NPIAS) as a non-hub primary commercial service airport and maintains a 14 CFR Part 139 Airport Operating Certificate (AOC). The Airport serves a wide range of aviation needs locally, regionally, nationally, and occasionally internationally. GCN is not currently served by a scheduled passenger service airline; however, several airlines have served the airport at different times in the past. The Airport serves as a major air transportation hub for tourism due to its proximity to Grand Canyon National Park and accommodates significant air charter traffic as well as general aviation traffic.

2.3 STUDY AUTHORIZATION

This study has been authorized by ADOT with the contract number ADOT18-189526, effective date 12-01-2017.

2.4 STUDY PURPOSE AND SCOPE

The analysis and design documented herein supports construction plans for the current phase of the airport facility. Design parameters are as outlined in the most current versions of the Federal Aviation Administration (FAA) Advisory Circulars (AC) as well as other pertinent project-specific guidance documents including the following:

AC 150/5200-33B	Hazardous Wildlife Attractants on or Near Airports
AC 150/5300-13A	Airport Design
AC 150/5320-5D	Airport Drainage Design
AC 150/5370-2G	Operational Safety on Airports during Construction
AC 150/5370-10G	Standards for Specifying Construction of Airports
U.S. EPA	Safe Drinking Water Act
U.S. EPA	Various Rules Regulating Water Treatment
U.S. EPA	Various Rules Governing Surface Water Treatment

2.5 PUBLIC OUTREACH PROGRAM

An effective public outreach program is important to the success of the GCN Airport Drainage Master Plan and Water Use Study. ADOT – Grand Canyon National Park Airport and Dibble Engineering are working together to provide information to key stakeholders and the public to obtain meaningful input that will ultimately inform the Study.

The public outreach program for the Study includes the following advisory committee, meetings, and workshops:

- Planning Advisory Committee (PAC) Meetings (2)
- Stakeholder Meetings
- Public Information Workshops (2)

2.5.1 PAC Meetings

The PAC will meet two times at key points in the Study to review draft reports and provide input.

The original PAC was developed during the GCN Airport Master Plan process which was recently completed. To continue the continuity of the committee from the Airport Master Plan, the project team recommended retaining a majority of the PAC members to leverage their knowledge and experience to provide the same guidance to this Study. Committee membership changed slightly to reflect the focus of the new Study. Representatives from the following entities will comprise the PAC:

Arizona Department of Transportation
Arizona Game & Fish
Arizona State Land Department
Coconino County
Federal Aviation Administration
Grand Canyon Airlines
Grand Canyon National Park Airport
Havasupai Tribe
Hydro Resources
Maverick Airlines
National Park Service
Papillon Grand Canyon Helicopters
Sierra Club, Grand Canyon Chapter
Town of Tusayan
USDA Forest Service – Kaibab Nat'l Forest

2.5.2 *Stakeholder meetings*

Stakeholder meetings will be held periodically to provide an update on the progress of the Study and seek feedback regarding the technical recommendations and the overall direction of the Study.

2.5.3 *Public Information Workshops*

To gather input from the public, two information workshops will be conducted to to provide information regarding the objective of the Study and gather feedback.

2.6 *CHRONOLOGY of PAST WATER and DRAINAGE SYSTEM IMPROVEMENT PROJECTS*

For both the potable water and drainage systems at GCN, many projects have been conducted since the airport was first built. To better understand how GCN's potable water and drainage infrastructure has changed from 1964 to present, available record documents including study reports and construction plans have been reviewed. The following table is the current understanding of this chronology.

Table 2.6.1 - Past Potable Water & Drainage System Improvements Projects (1964 - Present)

Year	Engineer of Record	Project Name	Drainage/Water System-Pertinent Improvements
1964	Clyde M. Stauffer Consulting Engineer	Grand Canyon National Park Airport	Drop inlet and transfer pump station installed in infield catchment area 8-inch Cast Iron Pipe (CIP) installed to a new Raw Water Reservoir (375,000-Gallon Underground Storage Tank) 8-inch Asphaltic Concrete Pipe (ACP) raw water reservoir overflow line to north 30,000-gallon Treated Water Reservoir built beneath Mechanical/Electrical Building 75 hp, 440v, 1,000 gpm @ 85 psi fire pump 6-inch ACP Fire Main w/ Hydrants
1986	Greiner Engineering	Construction Plans for New Apron, Service Road, Catchment Basin, Signing, Pavement Overlay & Related Work	Hypalon synthetic liner installed in infield catchment area
1991	Gilbertson Associates, Inc.	Improvement Plans for Grand Canyon National Park Airport	Expansion of the potable water distribution system Expansion of the reuse (reclaimed) water distribution system 375,000-gallon Underground Raw Water Storage Tank now shown as used for potable water 10-inch raw water forcemain to 125,000-gallon Uphill Storage Tank shown
1996	Damon S. Williams Associates, LLC	Water Supply & Treatment Study	Planning level documents for: Expansion of the water distribution system Expansion of the reuse (reclaimed) distribution system Infield culvert improvements
1997	Damon S. Williams Associates, LLC	Water Supply and Treatment Facility Upgrades, Phase 1	Repaired the Hypalon catchment area lining Refurbished the transfer pump station in the catchment area Replaced the raw water forcemain Installed the water treatment system Improved the water reuse (reclaimed) distribution system Added two 1.4M gallon (each) Uphill Raw Water Storage Tanks Refitted the existing 125,000-gallon Uphill Storage Tank to be used as a pre-sedimentation tank prior to the two 1.4M Gallon Uphill Storage Tanks Installed an oil/water separator Installed an 8-inch raw water forcemain to the 125,000-Gallon Uphill Storage Tank Installed a 6-inch raw water line from the Uphill Storage Tanks Installed a 6-inch overflow line from the Uphill Storage Tanks Installed a 6-inch reuse (reclaimed) water transmission main from the Town of Tusayan Installed a 6-inch potable water transmission main from the Town of Tusayan Abandoned the 10-inch raw water forcemain to the 125,000-gallon uphill storage tank Booster pump station, hydro tank & equipment shown to be installed by others Water Treatment Facility is fed from the uphill storage tanks (via oil/water separator and 30,000-gallon underground raw water storage tank). Discharges into the 375,000-Gallon Underground Potable Storage Tank. Booster pumps draw from the 375,000-gallon Underground Potable Water Storage Tank and discharges to the distribution system
1997	Kimley-Horn & Associates, Inc.	Apron Pavement Reconstruction, Storm Drainage Modifications and Expanded Apron Site Grading	Infield and apron drainage improvements
1999	Unknown	Connection to Hydro Resources	Potable water connection made to Hydro Resources at north end of Airport
2010	Sacra Engineering		Construction of 11-ft x 5ft-3in arch culvert south end of Taxiway 'P'
2012	Dibble & Associates, Inc.	Airport Catchment Basin Removal	Disconnected the water system from the infield catchment area. Removed transfer pump station. Drop inlet filled. 8-inch raw water forcemain from catchment area abandoned. Removed Hypalon liner

This Page Intentionally Left Blank

Section 3.0: DRAINAGE MASTER PLAN DATA COLLECTION

3.1 INTRODUCTION

Due to the lack of previous offsite hydrologic/hydraulic studies in the study area, a new 2-dimensional surface water model (using FLO-2D software) was developed for the GCN property as well as the upstream offsite watershed to estimate storm flow patterns, peak flow rates and depths, runoff volumes, etc. The 2, 5, 10, 50, and 100-year storm events were selected as recurrence intervals. The model focused on estimating runoff characteristics for both the mitigation of onsite flooding and identifying possible surface water harvesting collection and storage areas.

Following is a list of the record documents collected and reviewed.

1. Airport Catchment Basin Removal, Dibble Engineering, November 2012
2. Con-Arch Details, Sacra Engineering/Hunter Contracting, February 2010
3. Airport Safety Area and Drainage Improvements/Runway 3 Hold Apron, Stantec, November 2008
4. Apron Pavement Reconstruction, Storm Drainage Modifications, and Expanded Apron Site Grading, Kimley-Horn and Associates, May 1997
5. Improvement Plans, Gilbertson Associates, January 1991
6. Construction Plans for New Apron, Service Road, Catchment Basin, Signing, Pavement Overlay and Related Work, Greiner Engineering, May 1986
7. Construction Plans (Drainage structures – Runway, Culvert details), Clyde M. Stauffer, April 1964

3.2 WATERSHED

The study watershed encompasses Grand Canyon National Park Airport and is located within the Town of Tusayan and the Kaibab National Forest in Coconino County, Arizona (Figure 3.2.1). The total study area is approximately 16.03 square miles. Arizona State Highway 64 runs north-south through the watershed, along with other smaller paved roads and numerous dirt roads providing access to both the Airport and a nearby campground. Forest cover is the primary land use surrounding GCN.

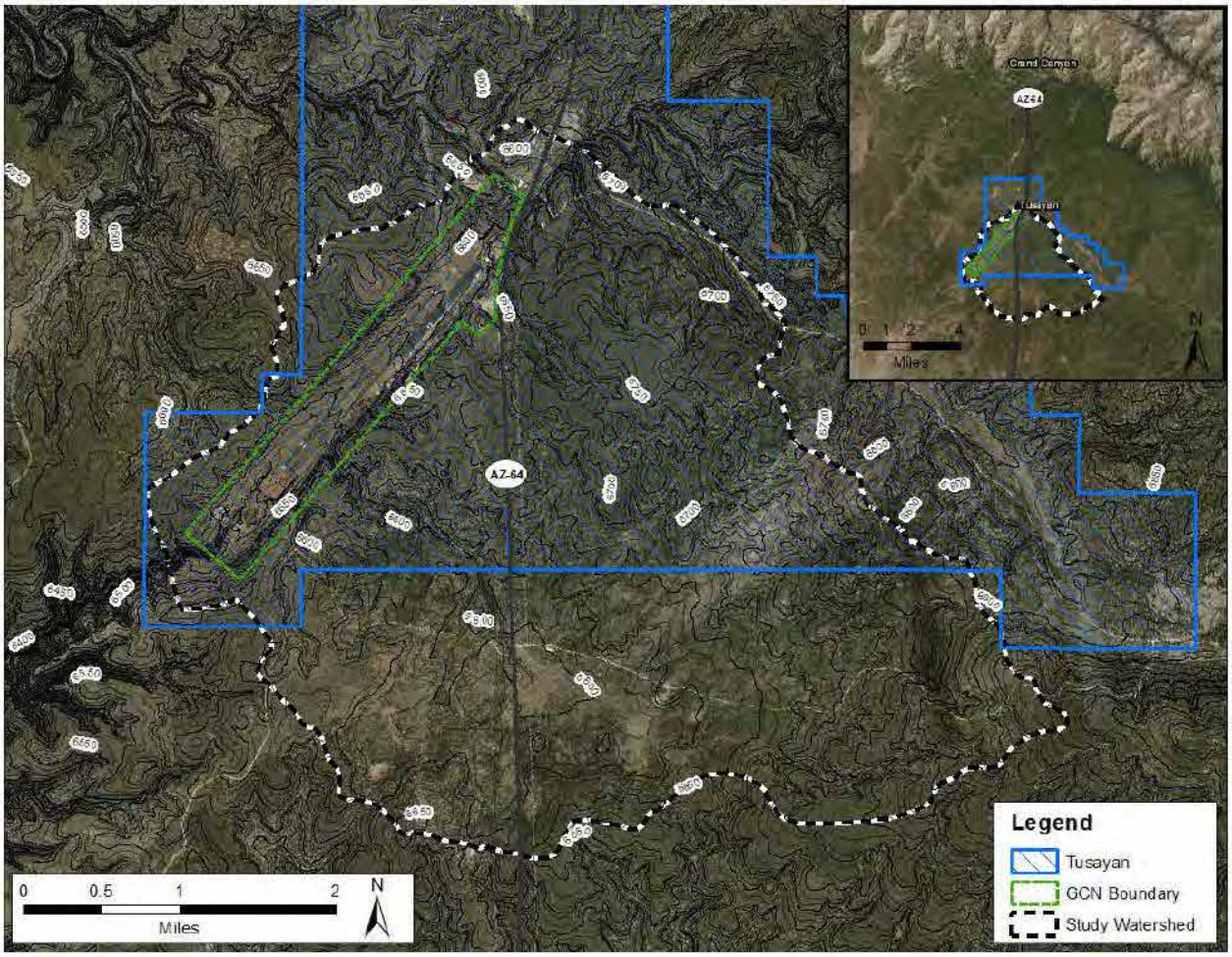

Figure 3.2.1 - Study Watershed Location and 10 Foot Contours

3.3 TOPOGRAPHIC AND AERIAL MAPING

Topographic and planimetric data developed as part of the recently completed GCN Airport Master Plan were provided by ADOT for use in this study. The horizontal datum for the dataset is NAD83 (2007) and the vertical datum is NAVD88. The data was developed by the GCN Airport Master Plan surveyor to State Plane Arizona Central US Foot. The topographic data provided consisted of 1-foot contours and a digital terrain model dataset. This was then processed using ArcGIS 10.5.1 software to create a 1-foot digital elevation model (DEM) raster.

For the watershed upstream (east) of GCN, a 10-meter DEM from the United States Geological Survey (USGS) was obtained. The topographic data from both sources was combined to create an elevation raster covering the entire watershed (further details are discussed in **Section 6.2**). Based on this topography, the elevation ranges from 6,505 ft to 6,885 ft within the study area (see **Figure 3.2.1**).

3.4 EXISTING LAND USE

Land use information for GCN was derived using the planimetric data developed for the GCN Airport Master Plan and aerial imagery obtained from USGS and Google Earth. Building information was obtained from Coconino County. Current land use classifications for GCN, Tusayan, and surrounding areas consists

of: grasslands, forest cover, burned forest cover, open space developed, pavement, buildings, high density residential, low density residential, commercial, RV park, and water. Further details may be found in **Section 6.5.1**.

3.5 HISTORIC DRAINAGE AND FLOODING ISSUES

Offsite drainage comes from the east, across Highway 64, and towards GCN. Drainage from the majority of GCN (central and southern portions) generally flow south-southwest to a man-made retention basin known as the Rain Tank reservoir. Drainage from the northern part of the Airport drains to the north, continuing to the Coconino Wash.

Figure 3.5.1 - Stream Lines Based on Topography shows the two major subbasins within the study watershed.

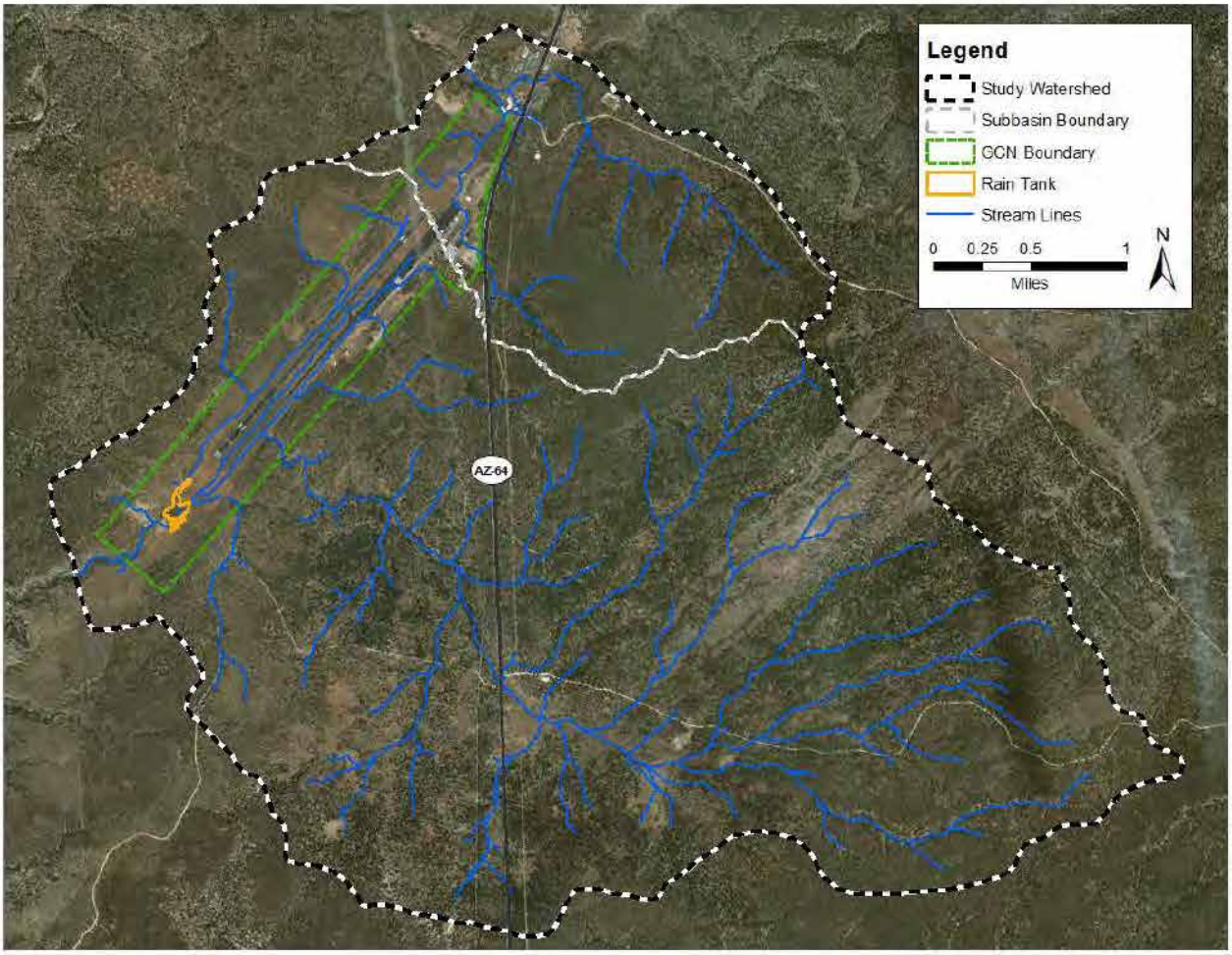

Figure 3.5.2 - Stream Lines Based on Topography

During a January 11, 2018 site visit, the GCN operations staff indicated several areas where surface water ponds. These ponding areas create a potential hazard by attracting wildlife.

Figure 3.5.3 - Drainage Concern Areas noted During Site Visit on January 11, 2018 illustrates the location of these areas:

- The area northwest of the aircraft parking area (reference **Figure 3.5.4a**) accumulates larger quantities of water and ponds, partially due to snow being plowed to this area.
- Near the southeast corner of the aircraft parking area, ponding occurs during and after storm events (**Figure 3.5.4b**) before entering the existing culvert.
- Ponding and clogging at the outlet of a culvert was noted by GCN staff which crosses a road near the northeast corner of the aircraft parking area (**Figure 3.5.4c**). The culvert is also in poor condition.
- There is a large culvert which outfalls to the northwest corner of the Highway 64 and Airport Road intersection (**Figure 3.5.4d**). GCN staff noted large amounts of water ponding in this area.
- In addition to **Figure 3.5.4**, the GCN operations staff stated the infield areas between the taxiway and runway accumulate stormwater and may serve as a potential wildlife hazard due to ponding. A series of culverts drain the infield areas; however, the culvert end sections are located within the Runway Safety Area (RSA) and should be extended. The FAA requires the RSA to have positive drainage by grading or storm sewers, as described in the GCN Airport Master Plan, and therefore considers the locations of these culverts to be non-compliant (see **Figure 3.8.2 - Drainage Structure Locations**).

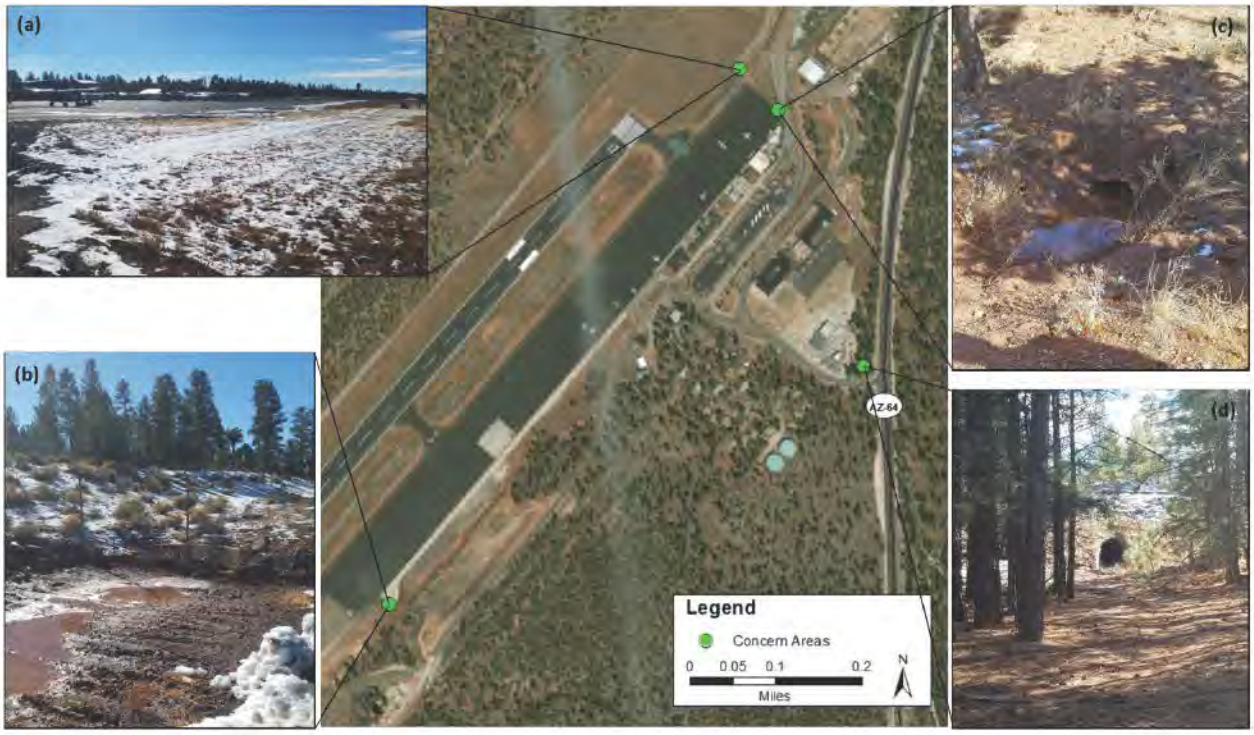

Figure 3.5.4 - Drainage Concern Areas noted During Site Visit on January 11, 2018

3.6 PREVIOUS STUDIES

The draft GCN Airport Master Plan was made available to the Study team by ADOT for reference. With respect to drainage, it recommends the need for an Airport Drainage Master Plan and notes the need to relocate the airfield culverts to outside the existing RSA.

To identify the existing drainage infrastructure and better understand past drainage improvements at the site, numerous design plans were obtained from GCN. These are listed in **Section 3.1**.

To evaluate the existing drainage infrastructure (as well as potable water systems discussed later on in this report) and better understand past drainage improvements at the Airport, applicable historical design documents were obtained from ADOT. The following were reviewed for pertinent information:

1. Airport Catchment Basin Removal, Dibble Engineering, November 2012
2. Con-Arch Details, Sacra Engineering/Hunter Contracting, February 2010
3. Airport Safety Area and Drainage Improvements/Runway 3 Hold Apron, Stantec, November 2008
4. Apron Pavement Reconstruction, Storm Drainage Modifications, and Expanded Apron Site Grading, Kimley-Horn and Associates, May 1997
5. Improvement Plans, Gilbertson Associates, January 1991
6. Construction Plans for New Apron, Service Road, Catchment Basin, Signing, Pavement Overlay and Related Work, Greiner Engineering, May 1986
7. Construction Plans (Drainage structures – Runway, Culvert details), Clyde M. Stauffer, April 1964
8. Grand Canyon National Park Airport, Clyde M. Stauffer Consulting Engineer, April 1, 1964
9. Grand Canyon National Park Airport Storm Drain System, Z&H Engineering, May 1996
10. Grand Canyon National Park Airport Water Supply, Treatment Facility and Deicing System Operations and Maintenance Manual, March 1999
11. Grand Canyon National Park Airport Water Supply and Treatment Facility Upgrades (Phase 1), Damon S. Williams Associates, June 3, 1997
12. Grand Canyon National Park Airport Water Supply and Treatment Study Master Reference Manual, Z&H Engineering, May 1996
13. Stormwater Pollution Prevention Plan (Exhibit B), Date Unknown
14. Water & Fire Systems Grand Canyon Airport Operation and Maintenance Manual (Volume 1), D.L. Norton General Contracting, April 15, 1998
15. Water & Fire Systems Grand Canyon Airport Operation and Maintenance Manual (Volume 2), D.L. Norton General Contracting, April 15, 1998

3.7 FEMA FLOODPLAIN INFORMATION

The Federal Emergency Management Agency (FEMA) hazard zones for the study area are delineated in **Figure 3.7.1 – FEMA Hazard Zones**. The Coconino Wash (shown in blue) runs through the Town of Tusayan and is determined to be a Special Flood Hazard Area subject to inundation by the 1% annual chance flood

(100-year flood). Coconino Wash is classified as Zone A, which means no base flood elevations have been determined and the limits are approximate. The wash is in the north-northwest section of the model domain and flows westward, thus it does not impact the GCN property. The remaining watershed area lies within Zone X, which is defined as areas determined to be outside the 0.2% annual chance floodplain (i.e., the 500-year flood).

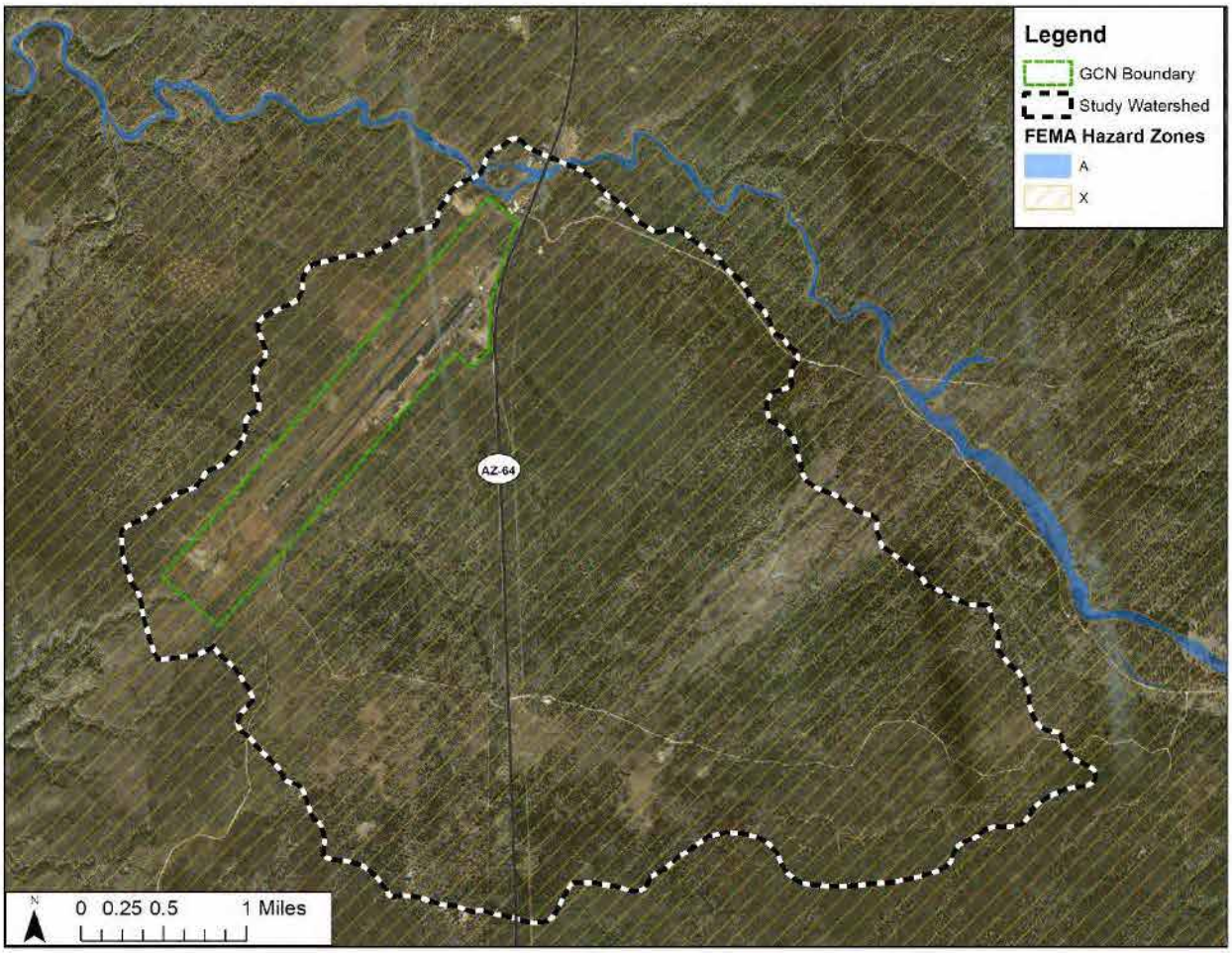

Figure 3.7.1 - FEMA Hazard Zones

3.8 EXISTING DRAINAGE INFRASTRUCTURE

The existing hydraulic structures on GCN property were identified through historical design documents from GCN records (described in **Section 3.1**), aerial imagery, and photos from a site visit on January 11, 2018. In total, 25 culverts and 32 catch basins were identified and considered hydraulically significant based upon the magnitude of the drainage discharge and extent of impact (**Figure 3.8.2 – Drainage Structure Locations**). The culvert and catch basin existence and relevancy were verified with GCN operations staff. In **Figure 3.8.1a**, culverts are represented by their inlet and outlet location. Culverts range in size and type from a 14-inch diameter corrugated metal pipe (CMP) to an 11' x 5'3" concrete arch pipe. Most of the infrastructure (2 culverts and 30 catch basins) flow south-southwest to a storm drain which outfalls near the southern end of the runway (**Figure 3.8.1e**). The flow continues in a southwest

direction via an earthen swale (**Figure 3.8.1d**), through a box culvert and to Rain Tank reservoir (**Figure 3.8.1c**).

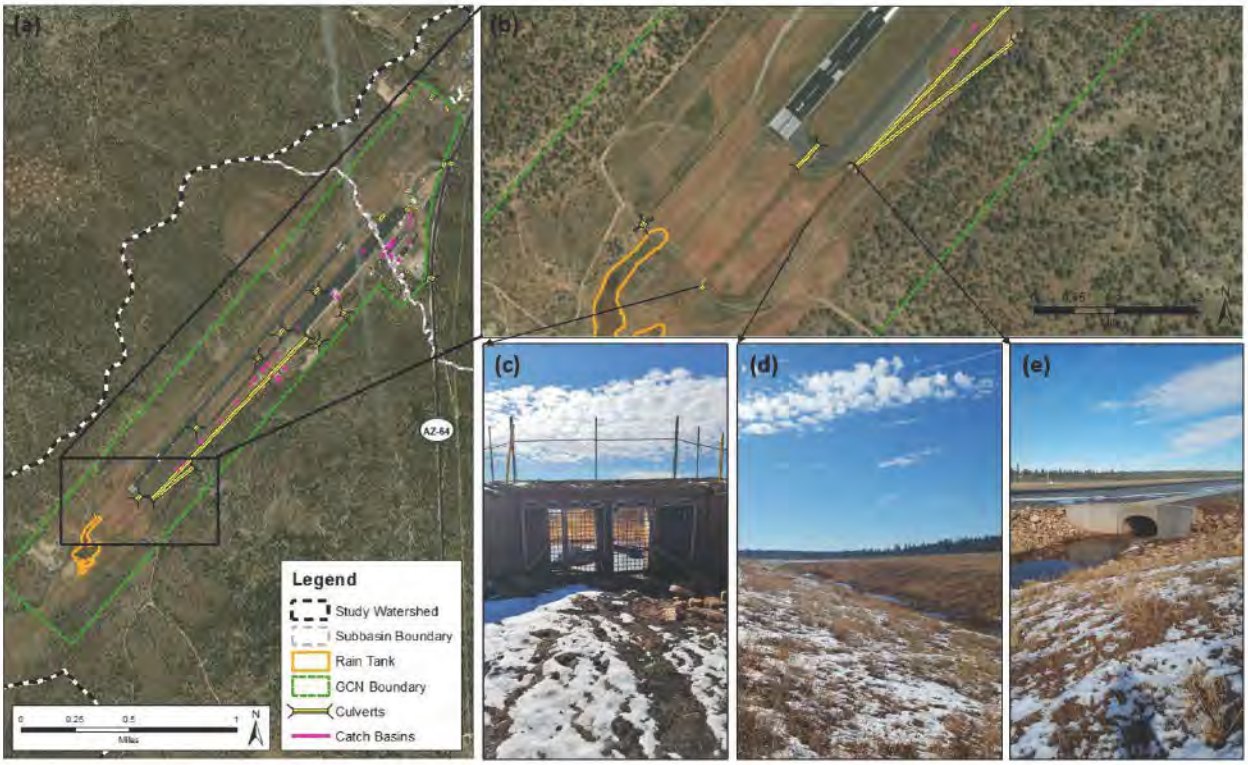

Figure 3.8.1 - Hydraulically Significant Hydraulic Structures at GCN

An inventory of GCN's drainage infrastructure based on record documents is shown in **Table 3.8.1** and **Figure 3.8.2**.

Table 3.8.1 - Drainage Structure Inventory

Name	Material	Dia. (in)	Peak Flow Rates (cfs)					
			1-year	2-year	5-year	10-year	50-year	100-year
Culv_001	Corrugated Steel	42	0.0	0.3	4.6	26.0	102.2	108.6
Culv_002	Corrugated Steel	24	1.9	3.8	7.5	12.2	18.3	18.7
Culv_003	Concrete	72x60	14.2	33.0	86.5	151.0	529.3	587.4
Culv_004	Corrugated Steel	24	0.0	0.0	1.6	4.0	11.1	14.8
Culv_005	Concrete	90	0.0	0.0	0.0	24.7	232.0	285.7
Culv_006	Corrugated Steel	24	0.3	1.4	8.4	20.1	23.9	24.7
Culv_007	Corrugated Steel	24	0.3	1.4	8.4	20.1	23.9	24.8
Culv_008	Corrugated Steel	15	0.8	1.0	1.4	1.7	2.1	2.2
Culv_009	Corrugated Steel	24	2.0	2.7	4.0	5.1	8.0	9.4
Culv_010	Corrugated Steel	24	0.4	0.9	1.5	1.9	4.0	5.8
Culv_011	Corrugated Steel	24	0.1	0.2	0.7	1.4	3.0	3.9
Culv_012	Concrete	24	1.6	4.9	11.8	14.0	15.8	16.2

Name	Material	Dia. (in)	Peak Flow Rates (cfs)					
			1-year	2-year	5-year	10-year	50-year	100-year
Culv_013	Corrugated Steel	24	1.1	2.3	5.2	8.5	16.8	20.2
Culv_014	Corrugated Steel	24	0.0	0.0	0.4	2.4	11.6	15.9
Culv_015	Corrugated Steel	24	0.0	0.0	1.2	2.9	27.4	30.0
Culv_016	Corrugated Steel	24	0.3	0.8	3.8	11.2	17.8	18.4
Culv_017	Corrugated Steel	24	0.2	0.4	2.6	5.9	12.4	13.3
Culv_018	Corrugated Steel	21	1.8	4.9	10.5	13.7	15.5	16.1
Culv_019	Corrugated Steel	21	2.0	5.5	11.4	14.7	21.6	23.9
Culv_020	Concrete	15	1.8	3.9	5.1	5.6	6.2	6.8
Culv_021	Corrugated Steel	21	1.4	4.7	6.9	7.6	8.5	8.6
Culv_022	Concrete	30	0.0	0.2	1.5	3.2	5.9	6.9
Culv_023	Corrugated Steel	24	0.1	0.3	0.9	1.9	4.4	5.3
Culv_024	Concrete	72x84	0.2	0.5	4.8	23.1	74.0	108.3
CB_001			0.3	1.7	7.1	15.9	100.0	100.0
CB_002			0.0	0.0	3.0	8.7	77.7	100.0
CB_003			0.0	0.0	1.2	3.0	10.7	19.7
CB_004			0.0	0.0	0.1	0.8	9.8	18.4
CB_005			0.0	0.0	0.1	0.9	12.9	21.0
CB_006			0.1	0.2	0.3	0.4	3.1	9.7
CB_007			2.0	2.9	4.7	6.0	9.7	11.6
CB_008			0.1	0.8	4.8	9.6	16.1	17.5
CB_009			1.6	2.9	6.5	11.2	32.6	48.2
CB_010			0.1	0.5	1.2	2.1	26.5	41.4
CB_011			4.1	9.1	20.9	33.2	53.3	59.7
CB_012			6.7	8.7	11.6	14.2	26.0	31.8
CB_013			1.2	2.3	4.1	5.7	10.3	12.9
CB_014			0.1	0.3	1.4	3.2	7.9	10.6
CB_015			0.1	0.2	1.0	2.1	4.1	4.9
CB_016			0.3	0.5	1.2	2.1	7.0	9.1
CB_017			0.0	0.1	0.4	0.7	1.9	2.6
CB_018			0.4	1.0	2.1	3.8	7.6	9.6
CB_019			0.3	0.7	1.4	2.1	4.9	6.7
CB_020			0.0	0.1	0.4	0.6	1.2	1.4
CB_021			0.6	0.8	1.1	1.5	3.2	3.9
CB_022			0.3	0.5	0.7	1.0	1.9	2.3
CB_023			0.4	0.6	0.8	1.1	2.1	2.8
CB_024			0.5	0.9	1.4	1.8	2.7	3.1
CB_025			1.7	2.2	3.8	5.0	7.9	9.5
CB_026			0.0	0.2	0.6	0.8	8.9	12.5
CB_027			0.5	2.0	4.1	11.2	24.6	26.9

Name	Material	Dia. (in)	Peak Flow Rates (cfs)					
			1-year	2-year	5-year	10-year	50-year	100-year
CB_028			0.0	0.0	0.0	0.4	1.2	1.5
CB_029			0.4	0.6	1.0	1.4	2.6	3.3
CB_030			0.3	0.5	0.7	1.0	1.9	2.6
CB_031			0.3	0.4	0.9	1.5	3.4	4.9
CB_032			0.2	0.7	4.7	9.7	21.9	25.5

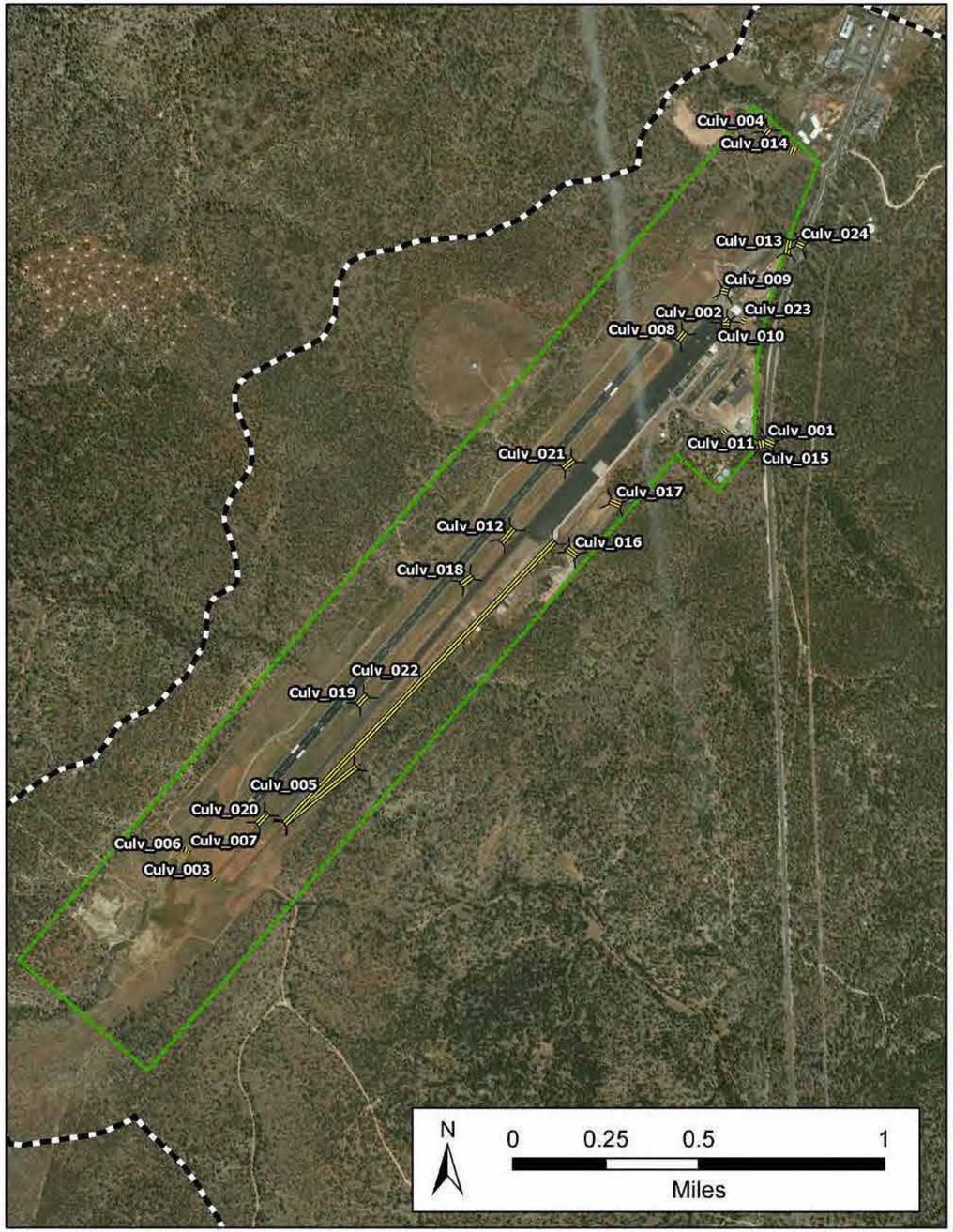

Figure 3.8.2 - Drainage Structure Locations

This Page Intentionally Left Blank

Section 4.0: WATER USE STUDY DATA COLLECTION

4.1 HISTORIC / EXISTING WATER RIGHTS

Through researching imaged records and applications from Arizona Department of Water Resources (ADWR), it is determined that ADOT owns the surface water rights of, and all water that flows to, the Rain Tank Reservoir, a man-made retention basin located at both the outfall of the GCN watershed and the southwest end of the GCN runway (see **Figure 3.5.2**). ADOT obtained these rights through an assignment to Claim Number 36-65512 from Marvin R. Hatch. The quantity of water assigned to this claim is 7,678.78 acre-feet per year and the priority date is recorded as 8/23/1895. There is a smaller surface water claim for Gregg Gibbons on the Rain Tank Overflow Dam Reservoir (Claim Number 38-15265), which is just downstream of Rain Tank. The quantity of water assigned to this claim is 1.2 acre-feet per year, with a priority date of 12/31/1960.

Regarding offsite surface water draining onto GCN, rainwater harvesting is legal in the State of Arizona. Rainwater is not appropriable before it reaches a channel; therefore, its harvesting would not encroach on any existing surface water right appropriations. See **Appendix C.5** for more detailed information regarding water rights adjudication at GCN.

4.2 EXISTING WATER SUPPLY

The Airport's current potable water demand is supplied from Hydro Resources in nearby Tusayan, AZ. From a connection north of the Airport, water is conveyed to a 375,00-gallon underground storage tank unit associated with the existing passenger terminal building. Water is also stored in two 1.4 million-gallon above ground steel storage tanks, which are generally filled annually or semi-annually by Hydro Resources. The two tanks are located east of the existing passenger terminal building on the south end of Beacon Drive (see **Figure 4.5.1 - Water Storage Tank Locations**). GCN's current water demand is supplied from these storage tanks by means of chlorination and a booster pump station located at the existing passenger terminal building.

GCN built and operated the original surface water collection, storage and treatment system to provide potable water to airport tenants and users. Due to potential safety hazards related to ponding surface water and the potential for wildlife in the infield areas at GCN, the FAA required the closure of the surface water collection and treatment systems. The closure led to the current arrangement of purchasing of potable water from Hydro Resources and repurposing of some of the water storage tanks (e.g. 1.4 million-gallon uphill tanks) from untreated surface water to potable water storage.

4.3 EXISTING WATER USE INFORMATION

Dibble conducted an evaluation of GCN's past water use to ascertain the likely average annual water consumption. The evaluation was intended to establish a baseline for estimating the likely total current and future annual water consumption as it pertains to the goals set forth in the GCN Airport Master Plan. This report is limited to the evaluation of current water usage and estimations of future water demands will be included in a separate report.

The basis for the evaluation is water usage data (flow meter records) from 2008 until present as provided by GCN and ADOT. The water users at GCN consist of the following 4 groups:

Tenants – defined as facilities associated with the following:

- FAA
- Grand Canyon Airlines, Grand Canyon Helicopters
- Maverick Helicopters main & additional buildings
- Papillon Helicopters
- Town of Tusayan
- Town Res #1 & #2

Additional Users – defined as the following facilities:

- Air Rescue & Firefighting (ARFF)
- Administration Building
- Airport Terminal
- South Ramp Fire Hydrant

Housing – defined as residential users generally located along Airport Circle, south of Airport Road

Non-Employed Residential – defined as miscellaneous users such as:

- #1 Maverick
- #2 Westwind
- 205 Airport Circle (EMPTY EFF 7/27/16)
- Tusayan Fire Department #22 Brush
- #5 CCSO (empty 8/1/2015)
- #15 Cox/Lynch
- Empty House #18
- Empty House 3717 #10
- Empty House #7 3718

Maps of the locations of individual water users are included in **Appendix D – Existing Water Use Information**.

4.3.1 Additional Flow Meters

While the available water usage data starts in 2008, the raw data indicated a large increase in usage in 2014. However, this was later corrected to account for the installation of individual flow meters in the Housing areas at GCN. Prior to 2014, usage was measured at only a few "regional" meter locations in that area. This resulted in usage being metered multiple times at both the regional and individual meters after 2014. However, the installation of individual meters now allows the identification of water usage for each user group (and individuals within those groups).

Additionally, GCN operations staff indicated that an overflow event at the 125,000-gallon uphill storage tank occurred in 2016. While the amount of the water loss was not quantified in the meter data, it can be seen in **Figure 4.3.2** thru **Figure 4.3.5**. No correction to the data from the overflow event was performed.

4.3.2 Seasonal Water Usage

As a matter of procedure, Hydro Resources fills the 1.4-million-gallon uphill water storage tanks annually (usually in the summer months). Water consumption, as measured at individual meters, also increases in the summer months. This effect is represented as seasonal spikes on the graphics.

4.3.3 Water Use Metrics

Based on the meter reading information provided, the following water use parameters have been derived for each user group as well as for GCN as a whole:

- Maximum Monthly Water Use
- Average Monthly Water Use
- Annual Water Use

More detailed water usage information by user group can be found in **Appendix D**.

4.3.4 Past Water Use Findings

Table 4.3.1 thru **Table 4.3.4** show the summarized water usage for each user group at GCN. These peak values can also be seen in **Figure 4.3.2 - Monthly Water Use by User Group**.

The distribution of the water usage among the user groups in 2017 is shown in **Figure 4.3.1**. The Tenants user group has the largest portion of the water use with approximately 56%.

The average annual water use is 1,417,467 gallons per year with a maximum usage of 1,967,806 gallons (2015). However, the maximum annual usage (1.97 million gallons) appears to be at least in-part due to the non-typical overflow event previously discussed and should be disregarded for future planning purposes. Based on the review of this data, an average historical water usage of 1.5 million gallons per year can be inferred.

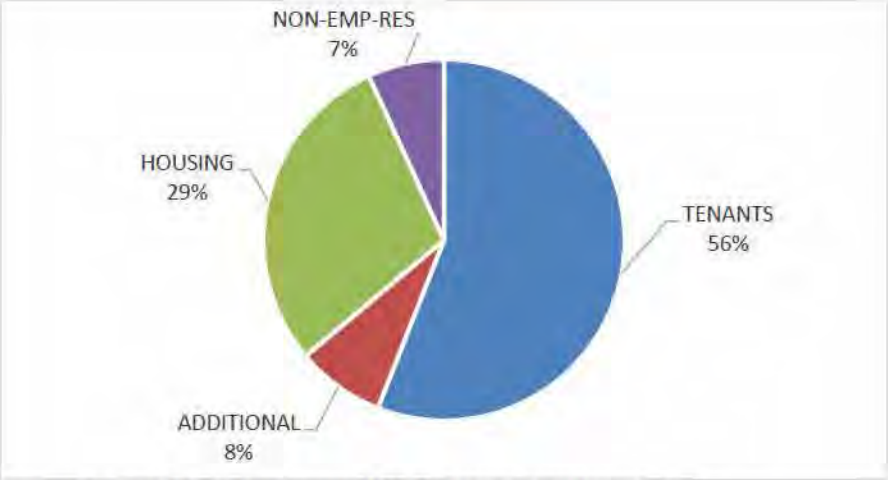

Figure 4.3.1 - 2014-2017 Annual Water Usage by User Group

Table 4.3.1 - Monthly Water Use by User Group (gallons/month)

User Group	Average	Maximum	Minimum
TENANTS	95,071	262,800	32,604
ADDITIONAL BUILDINGS	11,419	28,125	-
HOUSING	51,662	313,700	-
NON-EMPLOYED RESIDENTIAL	11,444	34,150	-

Table 4.3.2 - Annual Water Use by User Group (gallons/year)

User Group	2008	2009	2010	2011	2012	2013	2014	2015	2016	2017
TENANTS	1,411,187	1,304,311	1,635,567	1,182,600	1,024,688	809,790	979,500	1,104,053	906,780	815,455
ADDITIONAL BUILDINGS	-	-	-	-	-	3,017	110,189	132,813	119,243	177,511
HOUSING	-	-	-	-	-	-	141,730	563,540	753,140	534,600
NON-EMPLOYED RESIDENTIAL	-	-	-	-	-	-	84,005	167,400	120,950	92,600
TOTAL	**1,411,187**	**1,304,311**	**1,635,567**	**1,182,600**	**1,024,688**	**812,807**	**1,315,424**	**1,967,806**	**1,900,113**	**1,620,166**

Table 4.3.3 - Maximum Monthly Water Use by User Group (gallons/month)

User Group	2008	2009	2010	2011	2012	2013	2014	2015	2016	2017
TENANTS	262,800	162,585	207,719	152,253	134,753	97,690	124,460	144,036	89,738	121,242
ADDITIONAL BUILDINGS	-	-	-	-	-	1,515	28,125	18,731	25,259	25,324
HOUSING	-	-	-	-	-	-	51,450	75,800	313,700	107,750
NON-EMPLOYED RESIDENTIAL	-	-	-	-	-	-	34,150	20,800	19,600	16,100
TOTAL	**262,800**	**162,585**	**207,719**	**152,253**	**134,753**	**99,205**	**238,185**	**259,367**	**448,297**	**270,416**

Table 4.3.4 - Average Monthly Water Use by User Group (gallons/month)

User Group	2008	2009	2010	2011	2012	2013	2014	2015	2016	2017
TENANTS	156,799	108,693	136,297	98,550	85,391	67,483	81,625	92,004	75,565	67,955
ADDITIONAL BUILDINGS	-	-	-	-	-	251	9,182	11,068	9,937	14,793
HOUSING	-	-	-	-	-	-	11,811	46,962	62,762	44,550
NON-EMPLOYED RESIDENTIAL	-	-	-	-	-	-	7,000	13,950	10,079	7,717
TOTAL	**156,799**	**108,693**	**136,297**	**98,550**	**85,391**	**67,734**	**109,619**	**163,984**	**158,343**	**135,014**

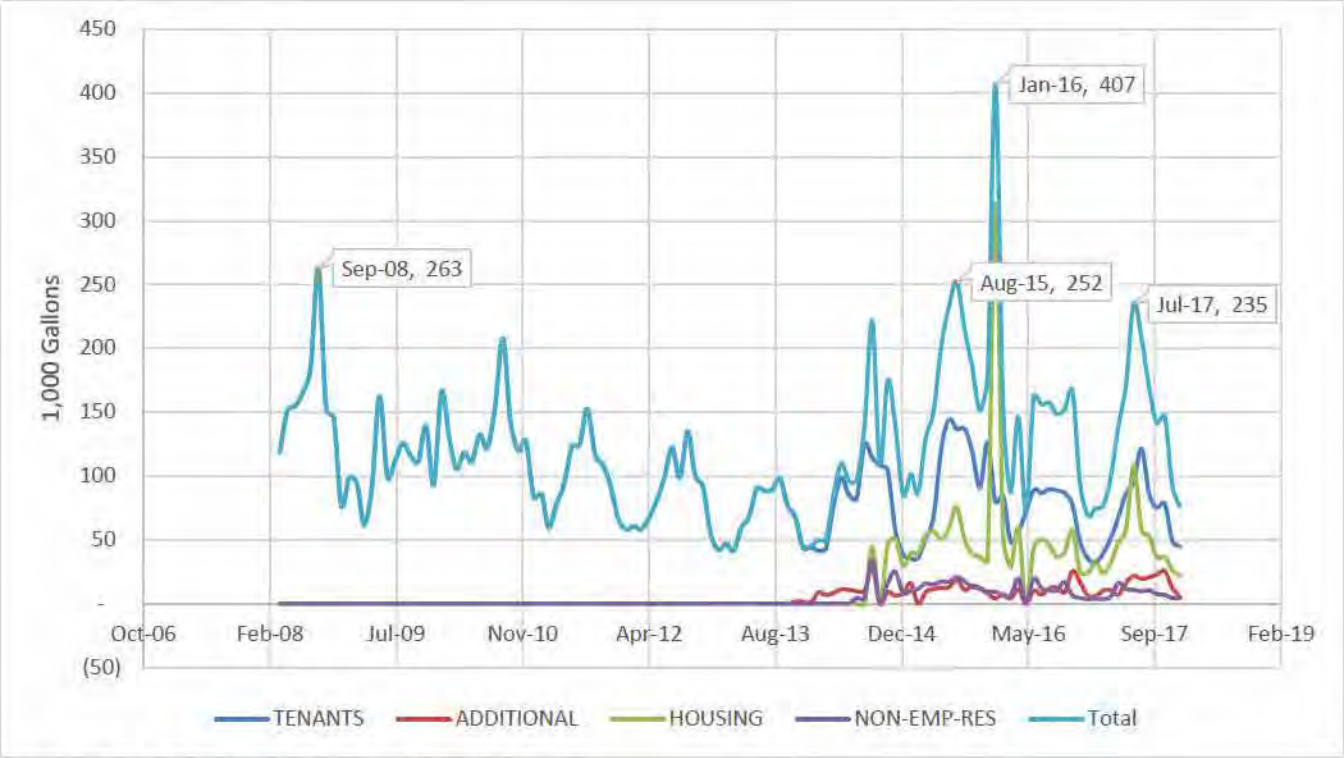

Figure 4.3.2 - Monthly Water Use by User Group

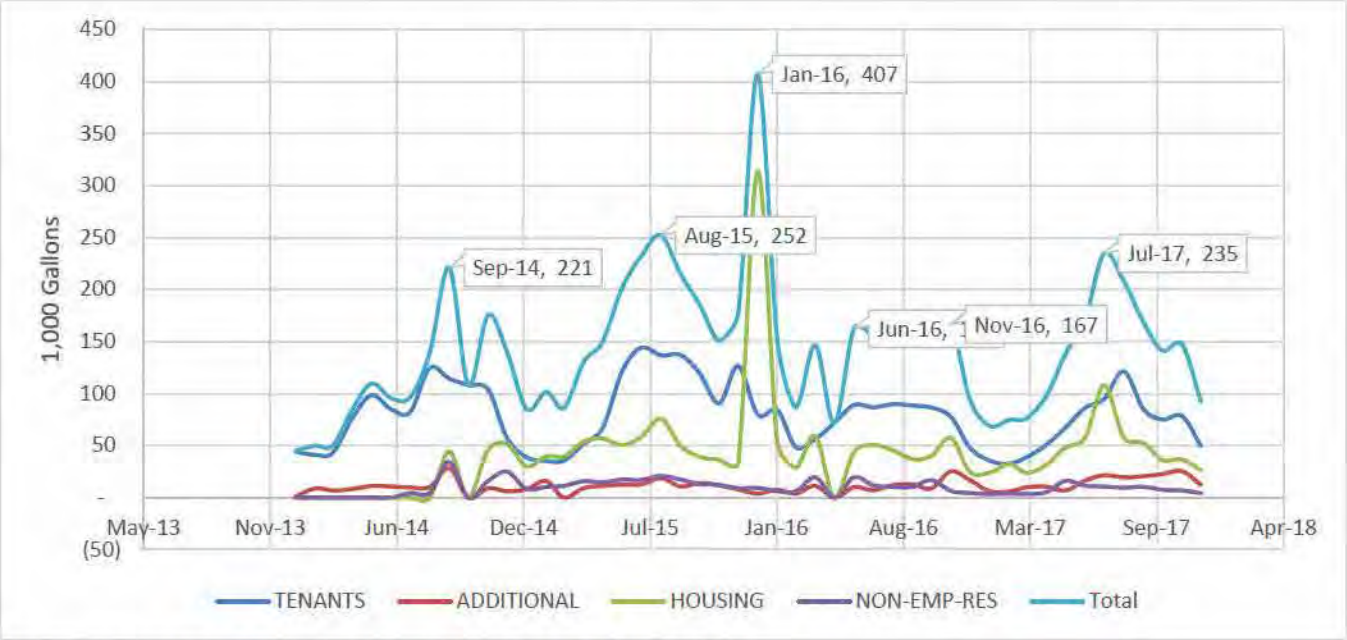

Figure 4.3.3 – Monthly Water Use by User Group (2014-2017)

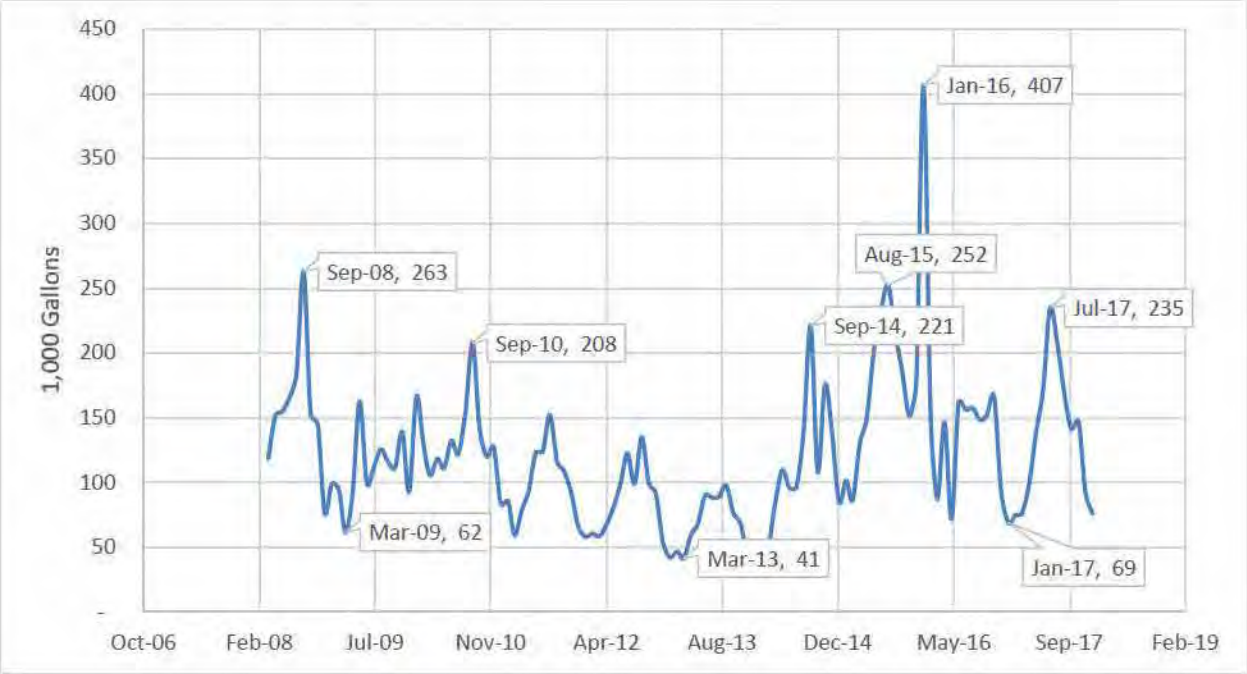

Figure 4.3.4 - Total Monthly Water Use

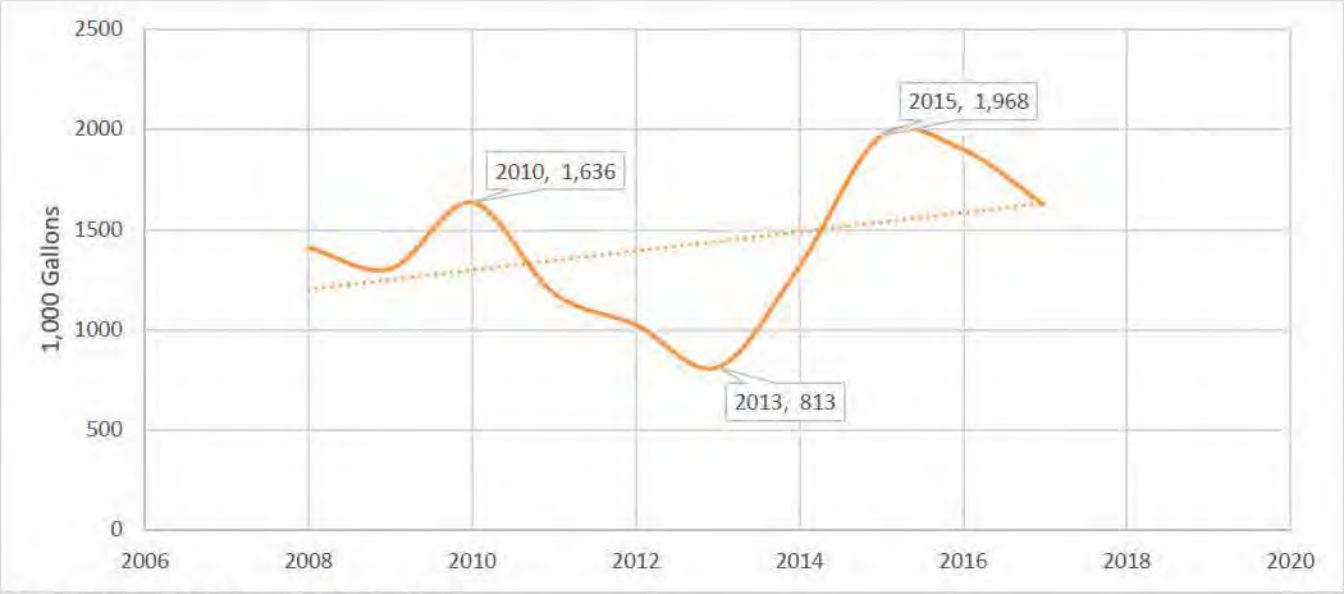

Figure 4.3.5 - Total Annual Water Use

4.4 EXISTING WATER TREATMENT FACILITIES

The *Grand Canyon National Park Airport Water Supply, Treatment Facility and Deicing System Operations and Maintenance Manual* (GCN SWTF O&M) produced in 1999, provides a thorough description of the original surface water treatment system design parameters and equipment. The GCN SWTF O&M manual has been provided in digital format for reference in **Appendix A.1.** Though the current system operates in a significantly different manner than the original system, the current system still utilizes distribution and storage components described in the GCN SWTF O&M manual. This evaluation of the current water treatment system is in no way a commentary on the original design, nor is it a commentary on the current operation of the facilities. The intent of this evaluation is to describe the current operations of the facility and to compare this mode of operation to the original surface water treatment plant design, for the purposes of estimating if using surface water as a source for potable is feasible.

4.4.1 General Operation

Though the Grand Canyon National Park Airport did at one time treat surface water, it currently does not. The facility now operates as a potable water storage and distribution system with trim chlorination. Figure 4.4.1- **Existing System General Process Flow Diagram,** was taken from Chapter 1 of the GCN SWTF O&M manual and modified to show current operations. Modifications to the general process flow diagram have been shown in red to illustrate the change in functionality and operation from the original SWTF design.

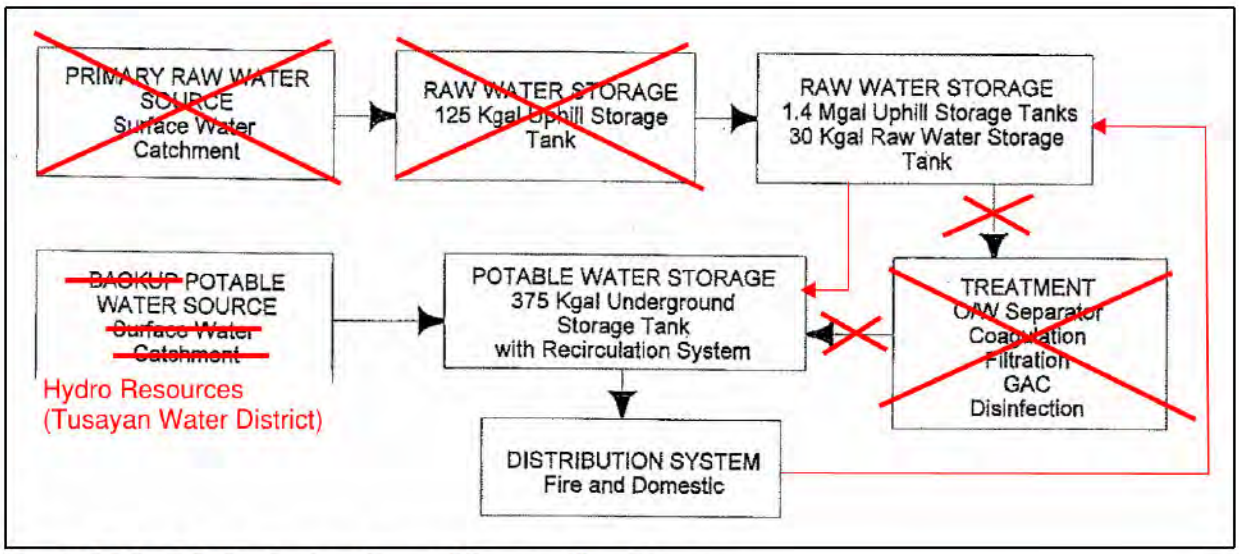

Figure 4.4.1 - Existing System General Process Flow Diagram

Figure 4.4.2 – Current Process Flow Diagram, displays the original process flow diagram for the treatment, disinfection, potable water storage and distribution systems. The original design and associated equipment evaluation are discussed further in **Section 7.1**. **Figure 4.4.2** comes from Chapter 3 of the GCN SWTF O&M manual. The process flow diagram has been modified to indicate how the facility currently operates. The equipment inside the dashed red line represents the entire surface water treatment system. None of the equipment inside the red box is currently being used, nor is it readily available to be used. The blue line represents the potable water supply line from Hydro Resources (which serves the nearby Town of Tusayan).

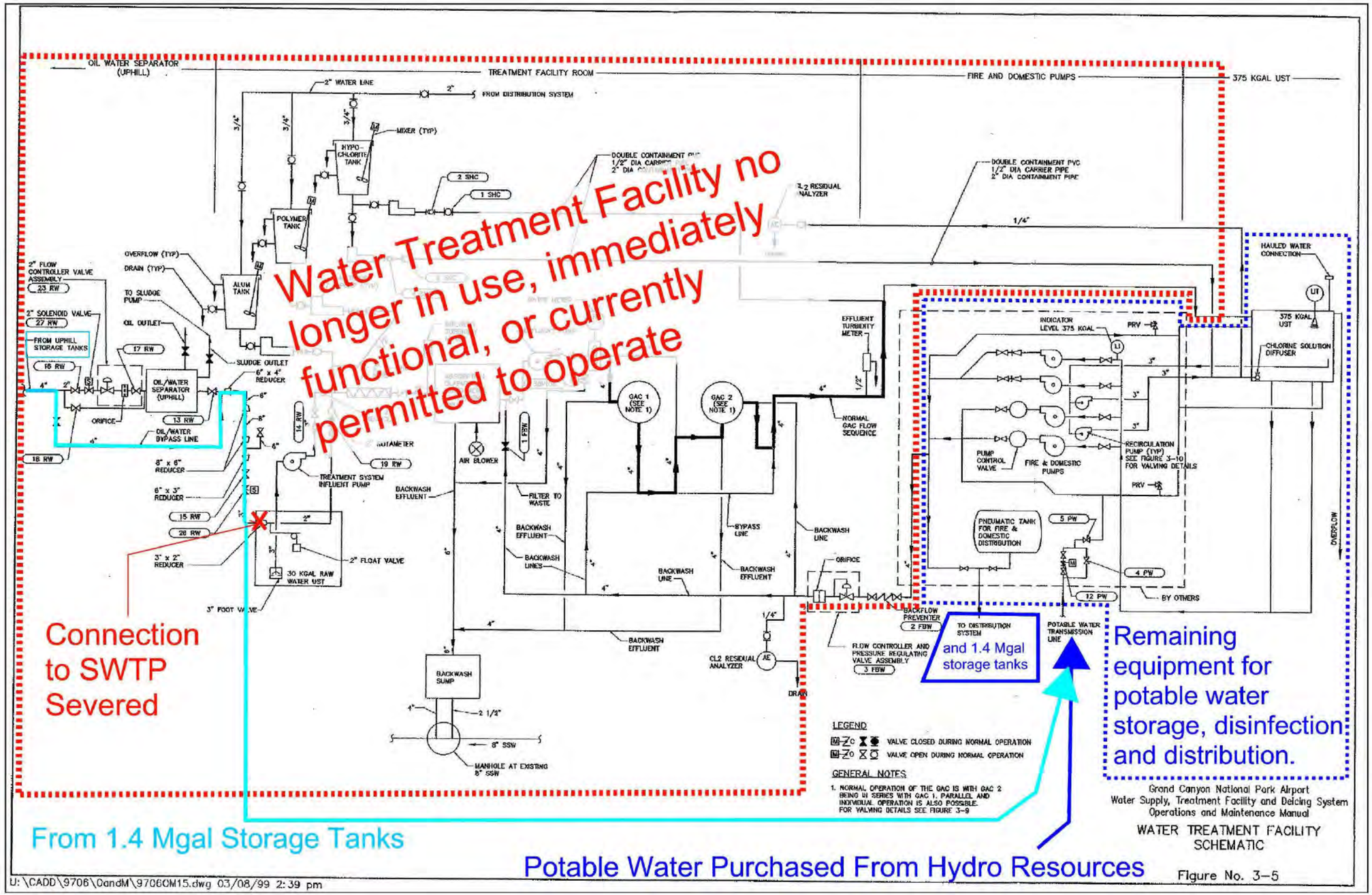

Figure 4.4.2 - Current Process Flow Diagram

This Page Intentionally Left Blank

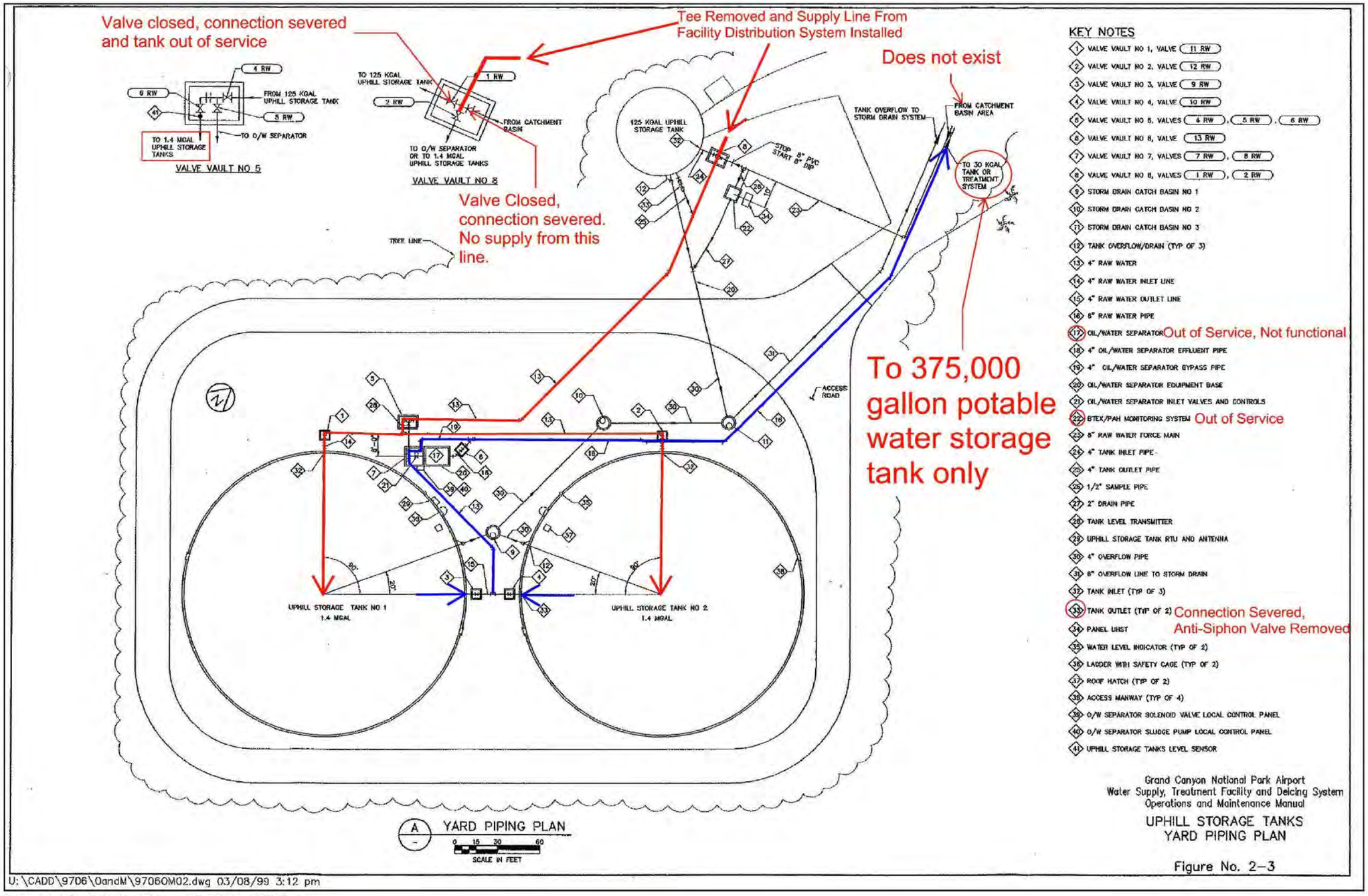

Figure 4.4.3 - Existing Storage Tank Yard Piping

This Page Intentionally Left Blank

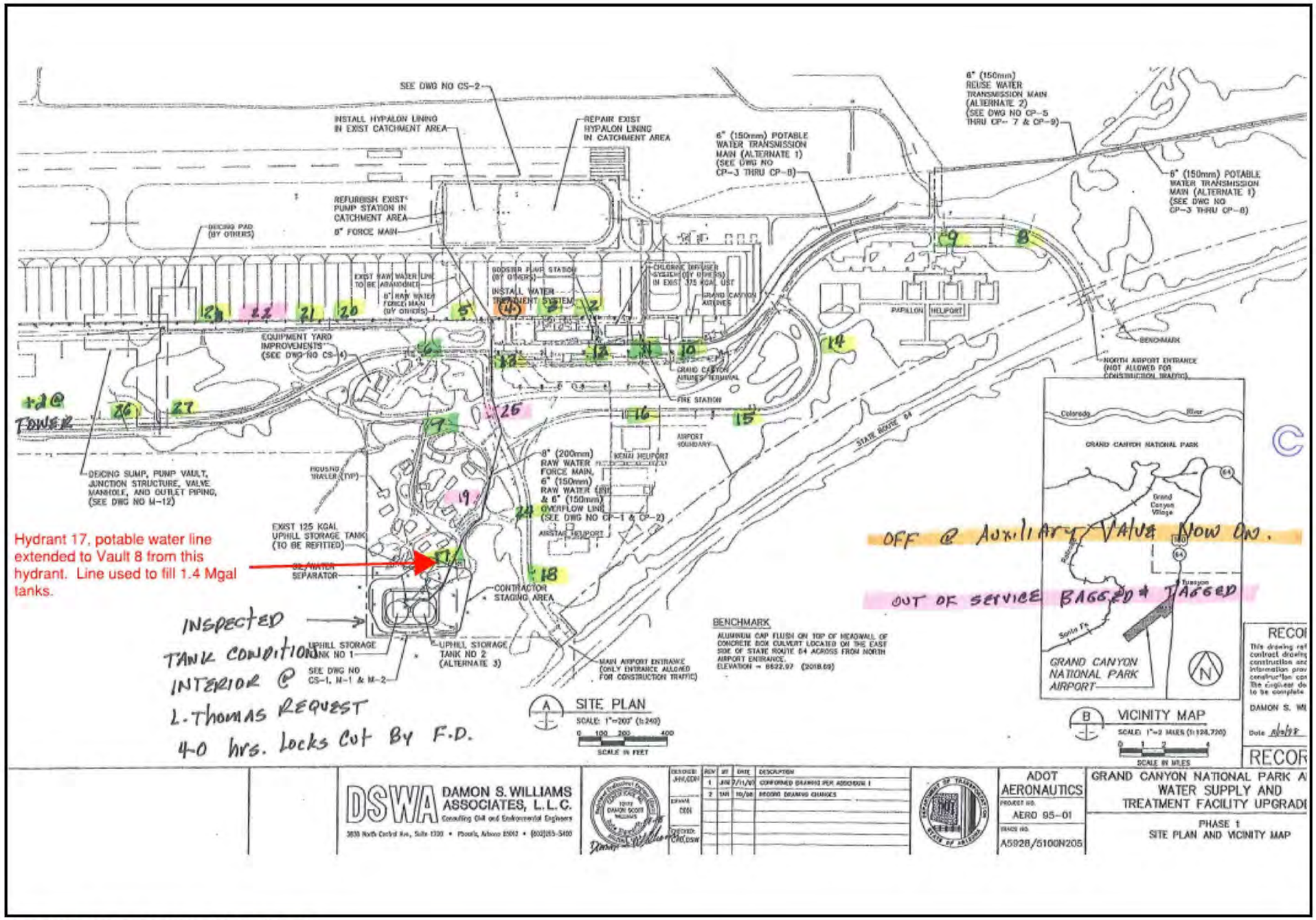

Figure 4.4.4 - Hydrant Location & Vault 8 Tie-In

This Page Intentionally Left Blank

As indicated on **Figure 4.4.2**, once the potable water from Hydro Resources has been delivered to the 375,000-gallon underground potable water storage tank near the terminal building, the distribution system may be used to convey water to the two uphill 1.4 million-gallon storage tanks for later use. The connection to the storage tank system can be found on **Figure 4.4.3 – Existing Storage Tank Yard Piping**, in the "Valve Vault No. 8" detail. According to John Rueter with Hydro Resources, who was involved with much of the work transitioning the facility away from a SWTF and into its current operation, the connection in Vault 8 can be traced back to a nearby fire hydrant. **Figure 4.4.4 – Hydrant Location & Vault 8 Tie-In**, was taken from a hydrant and valve testing and maintenance project report performed in May 2016. The fire hydrant Mr. Rueter is referring to is Hydrant 17 in **Figure 4.4.4**. From the tie-in location in Vault No. 8, water is conveyed to one or both of the 1.4 million-gallon potable water storage tanks. To fill the tanks, a manual valve in Vault No. 8 must be opened. See **Figure 4.4.5 – Vault 8, Distribution System Connection to Storage Tanks,** which displays a current picture of Vault 8.

Figure 4.4.5 - Vault 8, Distribution System Connection to Storage Tanks

When desired, water can be released from the storage tanks and routed back down the hill via an 8-inch Ductile Iron Pipe (DIP) line (originally in place to convey raw water from the tanks to the treatment facility, see **Section 7.1** for further discussion) to the 375,000-gallon underground potable water storage tank near the existing passenger terminal building. According to John Rueter, at the time of delivery the chlorine residual ranges from 0.03 mg/l to 0.06 mg/L. This residual degrades during the storage period in the 1.4 million-gallon potable water storage tanks and is lower than required for entry into the distribution

system (see **Section 5.2** for further discussion on disinfectant residual requirements). In route to the 375,000-gallon underground potable water storage basin, the flow is trim chlorinated to achieve the proper chlorine residual concentration. **Figure 4.4.6 – Trim Chlorination System** shows the current trim chlorination system.

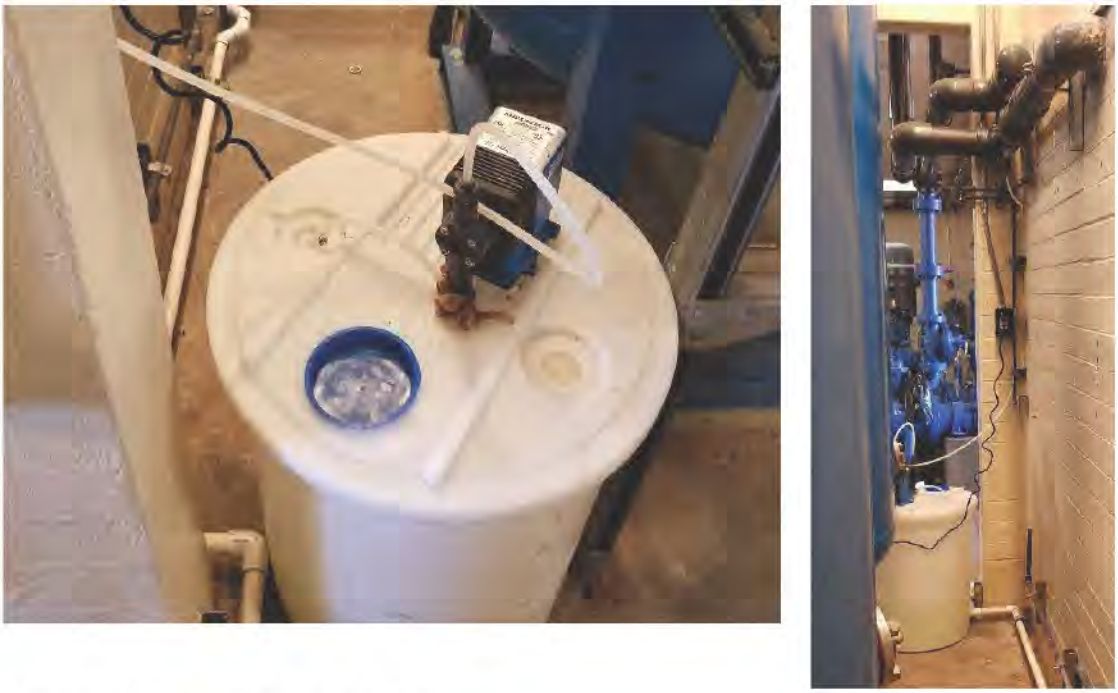

Figure 4.4.6 - Trim Chlorination System

Once contained in the 375,000-gallon underground potable water storage tank, the chlorine residual is continually monitored at the discharge of the distribution pumps. If needed, sodium hypochlorite is injected into the storage tank through a diffuser system on the tank floor. The basin is serviced by two recirculation pumps. Recirculation pumps are activated to circulate the water in the storage basin and disperse chlorine equally throughout the tank.

The domestic and fire pumps draw from the 375,000-gallon underground potable water storage tank as needed to maintain distribution system pressure. The system pressure is monitored at the nearby 5,000-gallon hydropneumatic tank.

4.5 EXISTING WATER STORAGE FACILITIES

There are 5 water storage tanks at GCN the study area (See **Table 4.5.1 - Water Storage** Tank Capacities and **Figure 4.5.1 - Water Storage Tank Locations**). A general description of their original and current functions is included in **Section 7.0: EXISTING CONDITION ANALYSIS – WATER**.

Table 4.5.1 - Water Storage Tank Capacities

Description	Type	Storage Capacity (gallons)
Treated Water Reservoir for Booster Pumps Beneath Water Room at Terminal Bldg.	Concrete	30,000
Uphill Storage Tank (Pre-sedimentation)	Steel	125,000
Underground Potable Water Storage Tank Adjacent to Terminal Bldg.	Concrete	375,000
Uphill Storage Tank 1	Steel	1,400,000
Uphill Storage Tank 2	Steel	1,400,000
Total		**3,330,000**

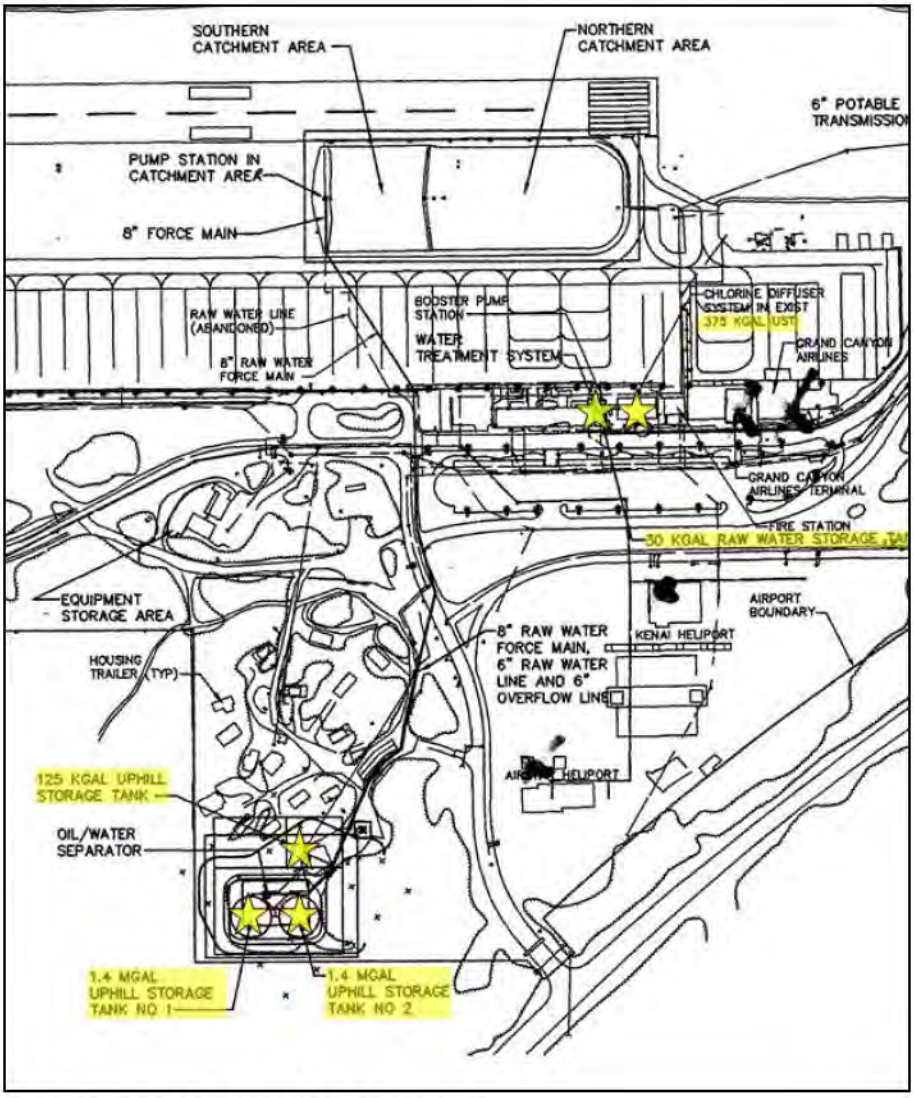

Figure 4.5.1 - Water Storage Tank Locations

4.6 EXISTING RECLAIMED WATER SUPPLY

The Tusayan Sanitary District (TSD) currently provides reclaimed (also known as reuse water) water to tenants at GCN. Reclaimed water is produced by converting wastewater into water that can be reused for other purposes. Reuse may include irrigation of landscaping areas or also be directed toward fulfilling certain needs in residences (e.g. toilet flushing), businesses, and industry.

Reclaimed water us provided to GCN tenants via a connection to the TSD system at the north end of the Airport at S. Long Jim Rd., west of AZ-64 (see **Figure 4.6.1** and **Figure 4.6.2**). The 4-inch reclaimed water pipe follows an alignment adjacent to GCN's existing 6-inch potable water supply pipe and 8-inch sanitary sewer service.

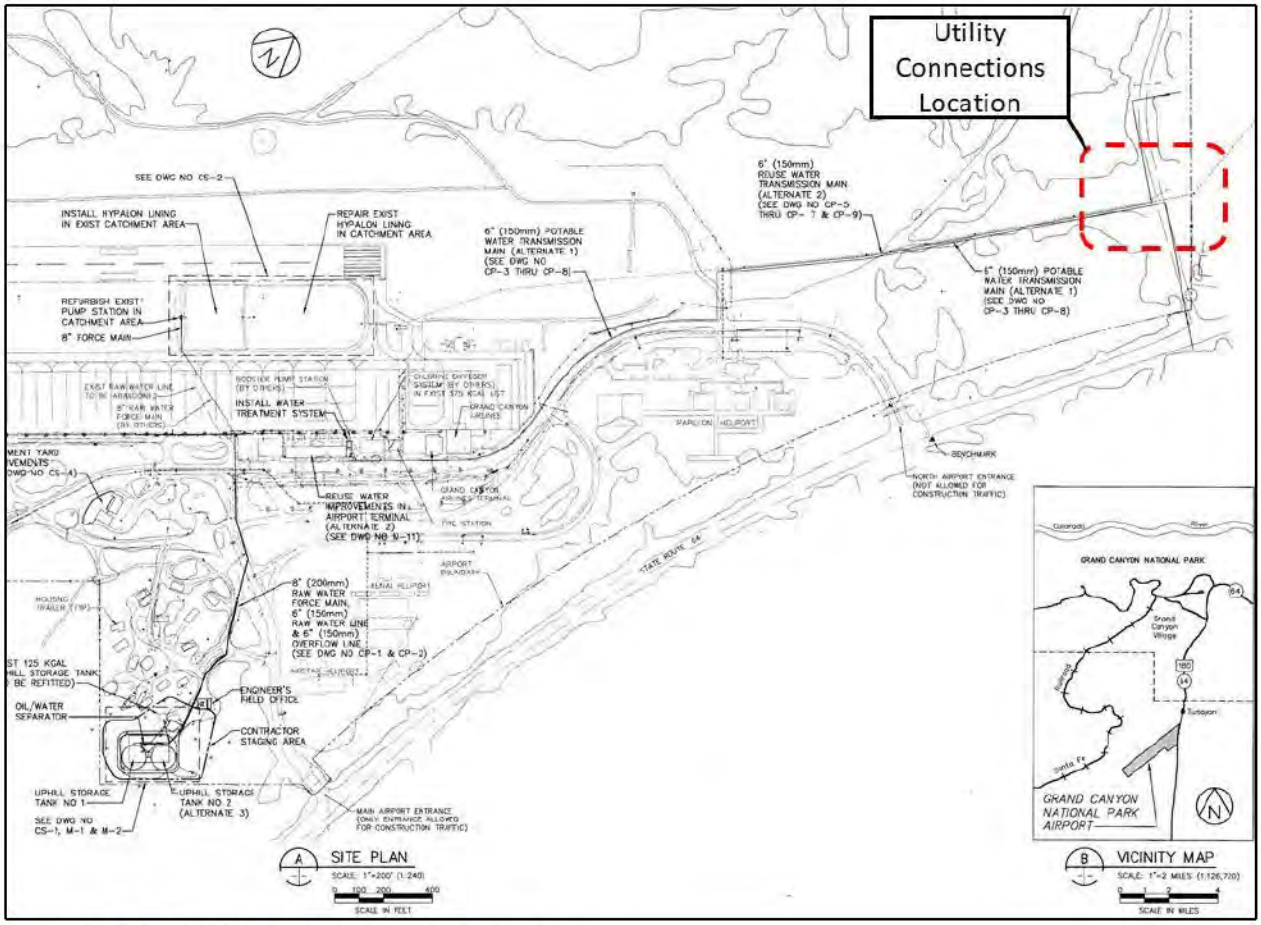

Figure 4.6.1 - GCN Utility Connections Location

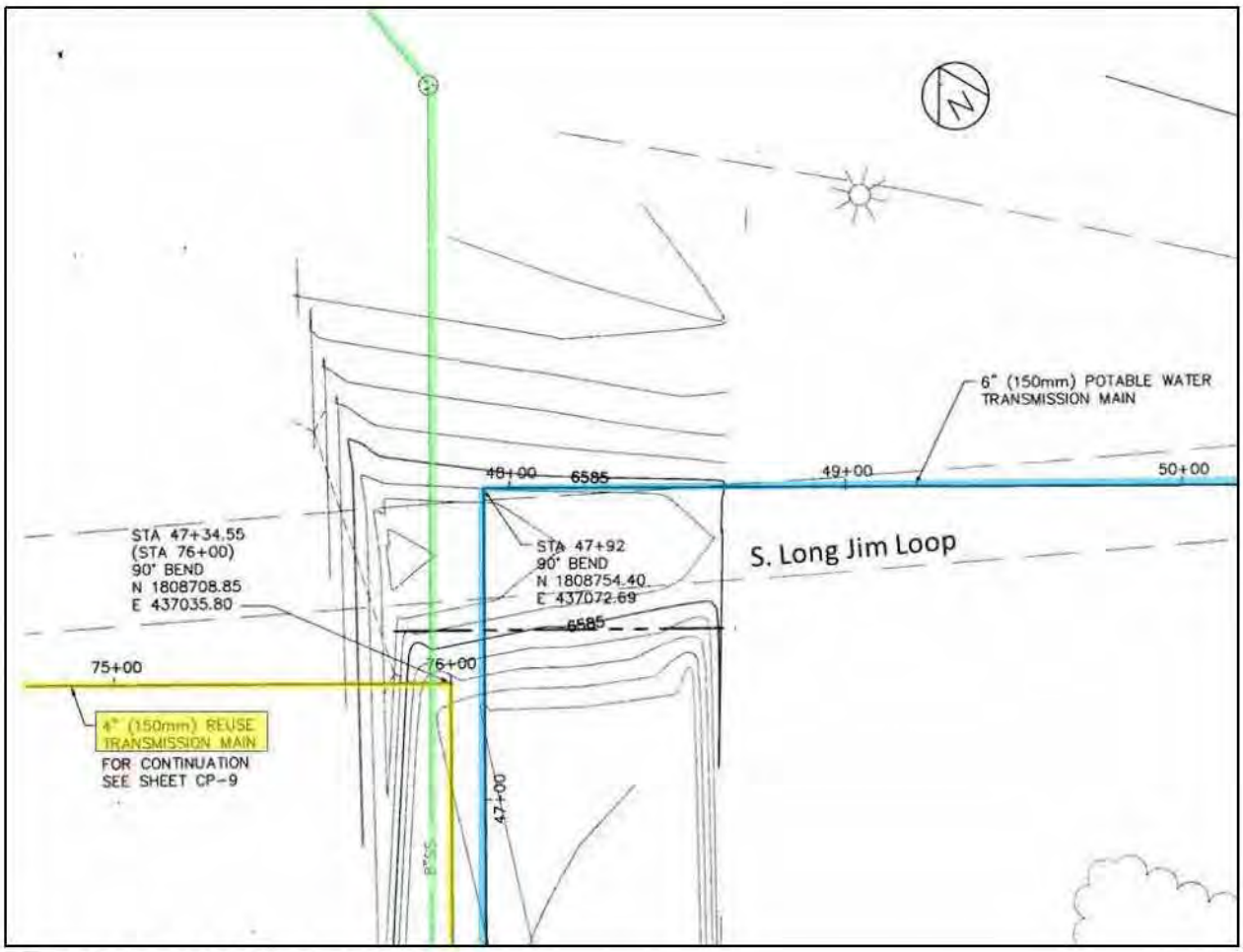

Figure 4.6.2 - GCN Utility Connections

Although reclaimed water is currently being supplied to GCN, only one tenant, Papillion, uses it largely for landscaping irrigation and grey water in restrooms. TSD currently generates approximately 67 million gallons of wastewater effluent per year. At least 30 million gallons is not sold as reclaimed water, which represents an opportunity for GCN to offset possible future increases in potable demands. Other information pertaining to TSD's wastewater/reclaimed water systems include:

- Reclaimed water from TSD is rated A+. Per EPA guidelines, A+ reclaimed water *"must be treated to Total Nitrogen < 10mg/L. Relatively high risk of human exposure."* For clarification, the term "relatively high risk" means that there is a high risk that the water will be in contact with humans, not that there is a high risk to humans due to contact.
- TSD rules dictate that for every 100,000 gallons of wastewater that a costumer generates, the costumer is guaranteed 100,000 gallons of reclaimed water to purchase.
- TSD has installed a portable backup power supply to ensure that reclaimed water can be provided during power outages.
- TSD is nearing completion of the construction of a 1.3 million gallon reclaimed water storage tank.
- TSD charges their customers $2.50 per 1,000 gallons of reclaimed water.

- All new (and many current) TSD customers are required to use reclaimed water for non-potable purposes.

Although reclaimed water piping has been installed throughout many portions of the landside portions of the airport, there is a break in the distribution piping just south of the Papillon facility. While the exact location of this break in not know, it results in reclaimed water not being available to other users without repairs or the installation of replacement piping. TSD has indicated that the costs for the installation of new/replacement piping may be negotiable.

4.7 EXISTING RECLAIMED WATER USE INFORMATION

As of the date of this report, past usage information has been requested from TSD but not yet received. However, TSD staff have indicated that the utility has the capacity to provide additional reclaimed water to GCN and its tenants. The final version of this report will include pertinent usage information.

Section 5.0: ENVIRONMENTAL DATA COLLECTION

5.1 DRAINAGE INFRASTRUCTURE EVALUATION

5.1.1 Current Airport SWPPP

The Stormwater Pollution Prevention Plan (SWPPP, see **Appendix A.6**) covers activities at GCN that may impact surface water. The SWPPP addresses the pollution prevention requirements of the Arizona Pollutant Discharge Elimination System (AZPDES) Stormwater Multi-Sector General Permit for Industrial Activities (MSGP) (AZMSGPXXXX-XXX) released by Arizona Department of Environmental Quality (ADEQ).

The Administrative Services Division is responsible for the overall operation and maintenance of the Airport. Permit requirements include SWPPP monitoring, implementing and maintaining BMPs, conducting inspections, and delivering training. ADOT, airport tenants, and other fixed-base operations under ADOT's control must comply with conditions of the SWPPP.

Facilities activities would be covered in the SWPPP under Sector S, Air Transportation Facilities, requiring discharges be authorized under a NPDES industrial stormwater permit. Sector S requirements apply to stormwater discharges from those portions of an airport where vehicle maintenance, equipment cleaning operations, or deicing operations are conducted.

The airport is situated mostly on the Rain Tank Wash and the very northern portion of the airport is on the Coconino Wash, neither of which contains impaired waters. The central and southern portions of the airport drainage is conveyed via earthen swales and concrete or pipe culverts south to the Rain Tank. This is part of the GCN approved SWPPP as part of its AZPDES industrial permit. Currently, the airport contains a freshwater pond, the Rain Tank, which is identified as a wetland on the Nation Wetland Inventory (NWI). The pond is fed by stormwater runoff, precipitation, and melted snow from GCN. According to FAA Advisory Circular 150/5200-33B, *Hazardous Wildlife Attractants on or near Airport*, the pond is considered a wildlife hazard attractant. Other water of the U.S. may also occur on the premises and these issues would be addressed in the SWPPP.

The current SWPPP addresses airport requirements for all fuel storage and distribution facilities on GCN property. Pollutants associated with airport activities at GCN are: fueling, helicopter operations, aircraft maintenance and repair, and de-icing.

5.1.1.1 Fueling

The fuel farm at the airport is in the northern premises of the airport property and includes two 20,000-gallon tanks, one each for Avgas (100LL) and Jet A fuel, plus a 6,000-gallon tank for diesel fuel and a 2,000-gallon tank for unleaded aviation fuel.

5.1.1.2 Helicopter Operator Facilities

Three helicopter tour operators have facilities east of the existing passenger terminal and airport access road. Each facility operator maintains fuel storage in above ground containers totaling more than 50,000 gallons of Jet A Fuel. Each facility operator is covered under the SWPPP.

5.1.1.3 Airport Maintenance and Facilities and Equipment

Four maintenance facilities exist on site totaling more than 5,000 square feet and are used mainly for storage of maintenance equipment and materials. There is also an airport office for office management and operations. The SWPPP covers these facilities.

5.1.1.4 De-icing

Some tenants do participate in aircraft de-icing as part of their operations. When this occurs, they are required to perform the activities in designated areas that would discharge to an oil/water separator and lined basin.

5.1.2 Other Current Airport Stormwater Regulatory Obligations

Beginning with the 2015 permit, ADOT must obtain coverage for stormwater discharges associated with specific construction activities under the construction general permit (CGP) or industrial activities under MSGPs. For construction activities at GCN, ADOT will continue to assign the highway construction work performed on behalf of the agency to outside contractors. ADOT's responsibilities under the new permit include ensuring that work done by outside contractors on their behalf complies with the AZPDES program of the Clean Water Act. ADOT's contractors are required to obtain coverage under, and comply with, the CGP when working on any ADOT-sponsored highway construction project.

5.2 WATER FACILITIES REGULATORY OBLIGATIONS

All water systems in the United States (except private wells serving less than 25 people) are governed by the Safe Drinking Water Act (SDWA), first established in 1974 and modified in 1986, 1996, 2005, 2011, and 2015. Prior to 1974 the States were in control of their own water quality standards. Chemical and microbial contamination was common in drinking water throughout the United States. Because drinking water contamination was so prevalent, the SDWA focused on identifying contaminants, treatment methods and treatment goals based on scientific principles which would be enforced by the federal government. In the future modifications, the scope of the SDWA broadened to include, among other things, source water protection and monitoring, distribution system monitoring, consumer rights, operator certification requirements, and funding for improvements to small water systems.

5.2.1 Importance of Source Water Type

Prior to the 1970's, most drinking water produced in the United States came from groundwater sources. For a variety of reasons, such as land subsidence for example, a shift in policy was made to start using surface water as the primary source for new drinking water systems. After the original SDWA was implemented, it was apparent that ground water sources and surface water sources should be managed separately in terms of treatment technologies and source monitoring. Groundwater sources are more frequently impacted by inorganic chemical contaminants such as arsenic or fluoride. Surface waters are generally impacted by microbial contaminants, such as Cryptosporidium. Furthermore, groundwater contaminants are generally more stable in their concentrations than surface water contaminants. When contaminant concentrations remain steady, the treatment process also remains steady. Surface Water Treatment Plants may see wide variations in microbial contaminants and turbidity due to seasonal rains, fires, and other environmental factors. **Because of the potential for wide fluctuations of contaminant**

concentrations in surface waters, and the need for process modifications based on those fluctuations, surface water treatment plants have more rigorous treatment requirements and require Grade 4 operators. If the Grade 4 operator is remote, then a Grade 3 operator would be required.

5.2.2 Existing Facility Regulatory Requirements

Currently, the GCN Water System (GCNWS) is considered a "consecutive connection" distribution system with storage facilities because it stores and redistributes potable water purchased from another entity (Hydro Resources). Because the water purchased is already potable, the only treatment required before distribution is trim chlorination to raise the chlorine concentration to the minimum required by code within the distribution system. To further define the GCNWS, it should be noted that the potable water purchased from Hydro Resources is groundwater. This is an important designation as it allows the system to operate under groundwater treatment rules rather than surface water treatment rules. The existing system is governed by the following U.S. Environmemtal Protection Agency (EPA) rules as modified by the ADEQ.

- Safe Drinking Water Act
- Ground Water Rule
- Disinfection Byproduct Rule (1 & 2)
- Lead and Copper Rule
- Total Coliform Rule
- Radionuclides
- Lead and Copper Rule

5.2.2.1 Purpose of Governing Rules

The broadest rule governing the GCNWS is the SDWA. Since its inception, the scope of the SDWA has broadened significantly. However, the core purpose of the SDWA is to establish a list of contaminants and their maximum allowed concentrations, treatment methods, and to protect source waters from contamination. The SDWA also establishes sampling/monitoring requirements to ensure Public Water Systems are achieving the treatment requirements set forth in the rule. The complete SDWA statute and an SDWA summary document has been included in **Appendix A.2**. Many rules listed in **Section 5.2.2** could be considered minor addendums to the SDWA and are summarized in **Table** 5.2.1. Complete statues including summary documents for all these rules are included in **Appendix A.3 – Treatment Rules Regulating the Existing Facility**.

Table 5.2.1 - Regulations Governing the Existing GCN Water System

Rule	Purpose
Ground Water Rule	Groundwater treatment systems are typically more simple than surface water treatment plants and design assumes a light microbial contaminant concentration. This rule requires treatment plant effluent disinfectant concentration monitoring. GCNWS currently conducts required monitoring.
Lead and Copper	Lead and copper in water cause a variety of health problems. This rule intends to reduce the exposure of consumers to these harmful contaminants by controlling materials used in water systems and controlling water corrosivity.
Total Coliform Rule	To protect consumers from the impacts of microbial contamination in drinking water. This rule requires distribution system sampling to confirm treatment efficacy and identify where microbial contaminants enter the distribution system.
Radionuclides	To protect consumers from the impact of radiation emitting particles. Monitoring frequency dependent on initial monitoring results.

The Disinfection Byproduct Rule (DBPR) is also a sub-component of the SDWA; however, it will be discussed separately due to the impact of this rule on current facility operation and possible conversion to a SWTF.

Historically, many water systems add disinfectant at elevated concentrations with the goal of meeting required distribution system residual and to protect consumers from microbial contaminants that may be present in the distribution system. Though illnesses related to microbial contaminants were reduced by doing this, unfortunately the interaction between liquid disinfectants and organic materials were found to produce a variety of carcinogenic byproducts. The DBPR was developed to balance the beneficial aspects of chemical disinfection with the detrimental effects. The facility currently is required to monitor the distribution system for the presence of DBP's and report those results to the State.

5.2.2.2 Current Regulatory Standing

The GCNWS is currently in good standing with the ADEQ. The complete violations history has been included in **Appendix A.4 – ADOT Airport Grand Canyon Water System Violations**. The facility routinely fails to monitor, and report results required by the DBP rule. However, these violations appear to be resolved in a timely manner. The facility has failed to produce consumer confidence documents on time, but also appears to remedy that in a timely manner. The most significant violation which has occurred in the last five years is failure to report a positive E. coli sample. Compliance with the Total Coliform Rule was subsequently achieved via repeat sampling and sampling at nearby service connections.

5.2.3 Current Regulatory Requirements for SWTF's

Rules regulating surface water treatment plants include the previously discussed rules except the Ground Water Rule. In addition, modern surface water treatment plants must also conform to the rules listed in **Table 5.2.2**. Documents defining the requirements of these rules have been included in **Appendix A.5 – Additional Rules Governing Surface Water Treatment Facilities.**

Table 5.2.2 - Regulations Governing Surface Water Treatment Facilities

Rule	Purpose
Surface Water Treatment Rule (SWTR)	To limit consumer exposure to microbial contaminants, in particular viruses, Giardia and Cryptosporidium require the SWTF to include filtration and monitor filter effluent turbidity.
LT1 Enhanced Surface Water Treatment rule (LT1ESWTR)	Modifies the SWTR to require filter effluent turbidity to be less than 0.3 NTU is 95% of samples taken.
LT2 Enhanced Surface Water Treatment Rule (LT2ESWTR)	Requires source water monitoring to determine if a SWTF is likely to receive heavier than expected microbial concentrations in the source water.

How these rules impact the existing SWTF equipment is discussed further in **Section 7.1**. Additional monitoring requirements related to these rules is described in **Section 5.2.4**.

5.2.4 Meeting with ADEQ

On April 20, 2018 a meeting was held with ADEQ staff to discuss bringing the GCN SWTF back online. The ADEQ staff had some concern with this concept due to the large increase in monitoring and operator requirements for SWTFs. Much of what has been summarized in this report was stated more concretely in a follow up email from Carling Olsen of the ADEQ. The following is the email received from Ms. Olsen:

> *Good Afternoon,*
> *It was a pleasure meeting you this morning and discussing the ADOT Grand Canyon Airport (AZ0403010) public water system. We discussed, among other things that if the rain water collection was reactivated that it would require many additional monitoring requirements. I have attempted to list out all of the additional requirements AZDEQ would require of this system, should they bring their rain water collection and thus their surface water treatment plants online.*
>
> *Currently the system is listed as a consecutive system only, buying its water from Hydro Resources – Tusayan (AZ0403312). Therefore, the current monitoring requirements for the Grand Canyon Airport system consist of only distribution system samples, as follows:*
> - *Revised Total Coliform Rule (RTCR): 2 routine samples per month in the distribution system, based on the system's Microbiological Sample Siting Plan (MSSP)*
> - *Chlorine Residuals (MRDLs): taken at the same time and place as all RTCR samples (both routine and repeats)*
> - *Disinfection Byproducts Stage 2:*
>   - *TTHM samples taken at Site T annually in September*
>   - *HAA5 samples taken at Site P annually in September*
> - *Lead and Copper Rule: 10 routine samples every 3 years taken in the distribution system based on the Lead and Copper Sample Plan.*
>
> *If the rain collection Inlet and surface water treatment plant was reactivated, since the source and plant have been off line for over five years, ADEQ would require a New Source Approval and for the system to show that any contaminants found above the MCL would be satisfactorily removed by the Surface water treatment plant prior to use for human consumption. Any changes that*

needed to be made to remove additional contaminants not permitted in the original ATC/AOC would need a new ATC/AOC permit. Based on the schematics shown in the meeting, it is likely that the treatment plant would require a grade 3 or grade 4 operator, either of which requires an on-site operator.

As far as monitoring requirements, the system would no longer be considered just a consecutive system, but a surface water system. The requirements would be as follows:

- *Nitrate – 1 routine sample per year at each EPDS (Entry Point of Distribution System)*
- *Nitrate – 1 routine sample per 9 years at each EPDS*
- *Inorganic Chemicals (IOCs) – 1 routine sample at each EPDS per year*
- *Synthetic Organic Chemicals (SOCs) – 1 routine sample at each EPDS for 4 consecutive quarters in a 3 year period (Initials). After initials if there are no detects, you may be moved to routine monitoring of 1 routine sample at each EPDS per 3 years.*
- *Volatile Organic Chemicals (VOCs) – 1 sample at each EPDS per quarter (Initials). After initials if there are no detects, you may be moved to routine monitoring of 1 routine sample at each EPDS per year.*
- *Radionuclides (RADs) – 1 sample at each EPDS per quarter (Initials). After initials depending on the average of the quarterly results, you may be moved to reduced monitoring of 1 routine sample at each EPDS per 3, 6, or 9 years.*
- *Asbestos – 1 sample at each EPDS per 9 years*
- *Revised Total Coliform Rule – same monitoring schedule as before –2 samples in the distribution system per month (follow your MSSP)*
- *Chlorine Residuals/Maximum Residual Disinfectant Limit (MRDLs) – sample taken in the field at the same time and location of each Total Coliform sample (routine and any repeats).*
- *Disinfection Byproducts (DBPs) – aka TTHM and HAA5 –2 samples at sites within the distribution system as specified in your DBP compliance monitoring plan per quarter in a specified month.*
- *Lead and Copper – 20 samples taken at specific sites as listed in your Lead and Copper Plan for 2 consecutive 6-month periods, to makes sure that the distribution system isn't affected by the new source.*
- *Additionally, you would have to comply with the Surface Water Treatment Rule (SWTR) and the Turbidity limits (0.3 in 95% of samples based on the Conventional Filtration Process) and the minimum residual chlorine of 0.2 mg/L at the EPDS and distribution system. The turbidity and EPDS minimum chlorine residual are required to be sampled continuously (every 15 minutes) and would likely require some type of SCADA system.*
- *The system would also have to begin LT2 sampling. Based on the size of the system this would require E. coli samples taken at the RAW water inlet every 2 weeks for a 12 month period. If the E. Coli results exceed the limit specified, the system will need to begin Cryptosporidium monitoring to ensure proper Log removal of the treatment plant.*
- *The Conventional Treatment of this Surface Water Treatment Plant would also require the monitoring of Total Organic Carbon removal ratios, aka the Disinfection Byproduct Precursor rule.*

If the system choses to move forward with reactivating the Rain Water Collection and Surface Water treatment plant, they are not required to enroll in the Monitoring Assistance Program (MAP), but I would recommend it to off-set the cost of the additional monitoring. This program cost a base fee of $250 + $2.57/service connection per year. Contracted MAP samplers will come out to your system and take all initial and routine EPDS monitoring samples required and send the results to the owner on file of the system. The system must have an EPDS and know where it is located to show the MAP sampler where it is. Any triggered increased monitoring of the contaminants that MAP samples for at the EPDSs, will become the responsibility of the system. This can occur as a result of a sample results exceeding the MCL (for RADs or IOCs), the trigger limit for Nitrate and Nitrates, or the detection limits for SOCs and VOCs.

I believe this is everything we covered in our meeting, as far as monitoring and reporting requirements. All of these monitoring requirements can be found outlined in the Code of Federal Regulations (CFR) 40 § 141, if you would like to research them more. If you have any questions please feel free to contact me.

Thank you,
Carling Olson
Compliance Assistance Coordinator
Drinking Water Monitoring & Protection Unit
Arizona Department of Environmental Quality

(602) 771-4638
olson.carling@azdeq.gov
ADEQ Website: www.azdeq.gov"

Section 6.0: EXISTING CONDITION ANALYSIS - DRAINAGE

6.1 METHOD DESCRIPTION

To evaluate existing flow conditions at GCN, a two-dimensional hydrologic and hydraulic model was developed using FLO-2D Pro, Build Number 16.06.16 with an executable file dated 2/28/2017, which is a rainfall-runoff model. The FLO-2D model uses NOAA Atlas 14 rainfall data and the Green and Ampt method for rainfall losses, following methodology outlined in the ADOT hydrology manual. The analysis was performed for the 1-year, 2-year, 5-year, 10-year, 50-year, and 100-year, 24-hour duration storm events, which is discussed further in **Section 6.3**. Input files for the model were developed using ArcGIS version 10.5.1 software. The model utilizes the following components:

- Rainfall – RAIN.DAT
- Topography – FPLAIN.DAT
- Infiltration – INFIL.DAT
- Area Reduction Factors – ARF.DAT
- Hydraulic Structures (Culverts and Catch Basins) – HYSTSRUC.DAT
- Model Inflows – INFLOW.DAT
- Model Outflows – OUTFLOW.DAT
- Floodplain Cross-Sections – FPXSEC.DAT
- Model Control File – CONT.DAT

Model input file details and input file development is discussed in the following sections.

6.2 COMPUTATIONAL DOMAINS AND FLO-2D GRIDS

Two modeling domains were developed to reflect the differences in available topography data. An 'Airport' model was developed using the detailed data from the GCN Airport Master Plan, and the model domain consists of 10 x by 10-foot grid cells. The Airport model is 3.15 square miles and contains 876,646 grid elements. The USGS DEM data was used to develop the 'USGS' model, representing the watershed upstream of GCN. FLO-2D grid cell sizes for the USGS model are 30 x 30 feet. The USGS model is 12.88 square miles and consists of 399,166 grid elements.

The detailed topography data for the Airport model was used to create a 1-foot raster grid in ArcGIS. The USGS topography data is a 10-meter raster grid. Elevation data was interpolated between the two datasets at the boundary of the higher quality topography data to ensure the surface was represented smoothly across the transition from coarser to finer spatial resolution of the datasets.

6.3 RAINFALL

Point precipitation data was sampled from the watershed centroid and obtained from the NOAA Atlas 14 dataset, downloaded from the NOAA website. Storm events include 1-, 2-, 5-, 10-, 50-, and 100-year return periods for 24-hour durations. The 6-hour duration storm events were analyzed and compared to the 24-hour events for the 2- and 100-year FLO-2D models, and it was determined that flow depth and discharge were greater for the 24-hour duration models. Therefore, modeling efforts were focused on the 24-hour durations. HEC-1 was utilized with the hypothetical point precipitation frequency estimates to develop site-specific rainfall temporal distributions for each storm event. This follows the methodology listed for temporal rainfall distribution for HEC-HMS modeling in the ADOT hydrology manual as there is no methodology specified for FLO-2D temporal rainfall distributions. Modeled rainfall is spatially

distributed across each model domain. The modeled maximum rainfall depth for each storm event and each domain is summarized in **Table 6.3.1**.

Table 6.3.1 - Modeled Maximum Rainfall Depth over Both Domains

Domain	Modeled Maximum Rainfall Depth (in)					
	1-Year	2-Year	5-Year	10-Year	50-Year	100-Year
Airport	1.47	1.84	2.31	2.70	3.65	4.10
USGS	1.53	1.91	2.40	2.80	3.80	4.27

6.4 INFLOW

To account for flow from one domain to another, the inflow file (INFLOW.DAT) is used to input outflow from the upstream model (USGS) to the downstream model (Airport) using hydrographs. The INFLOW.DAT file is created from the upstream model for select grid elements in the downstream model. The USGS model grid size is 30 feet, while the Airport model grid size is 10 feet. Therefore, the outflow hydrographs from the USGS model are divided by 3 (as one 30-foot grid cell flows to three 10-foot grid cells) to input the correct volume and flow to the Airport model. In other words, the outflow hydrograph from one USGS grid cell is divided by 3 to represent the inflow to three Airport grid cells and stored in the INFLOW.DAT file.

6.5 RAINFALL LOSSES

Rainfall losses in the FLO-2D models are simulated using the Green and Ampt method, following methodology from the ADOT hydrology manual. The Green and Ampt parameters are developed using spatially distributed land use and soils data, and input to FLO-2D with the INFIL.DAT input file, which specifies the parameters for each grid cell in each domain. The spatially distributed land use and soils data are further described below.

6.5.1 LAND USE

The land use classifications were developed using planimetries from the GCN Airport Master Plan, vegetation information from the United States Forest Service (USFS), and aerial imagery (**Figure 6.5.1 - Spatial Distribution of Land Use Classifications**). The land use codes and associated land use parameters (initial abstraction, percent impervious, Manning's n-value, etc.) are summarized in **Table 6.5.1 - Land Use Descriptions and Parameters for Both Domains**.

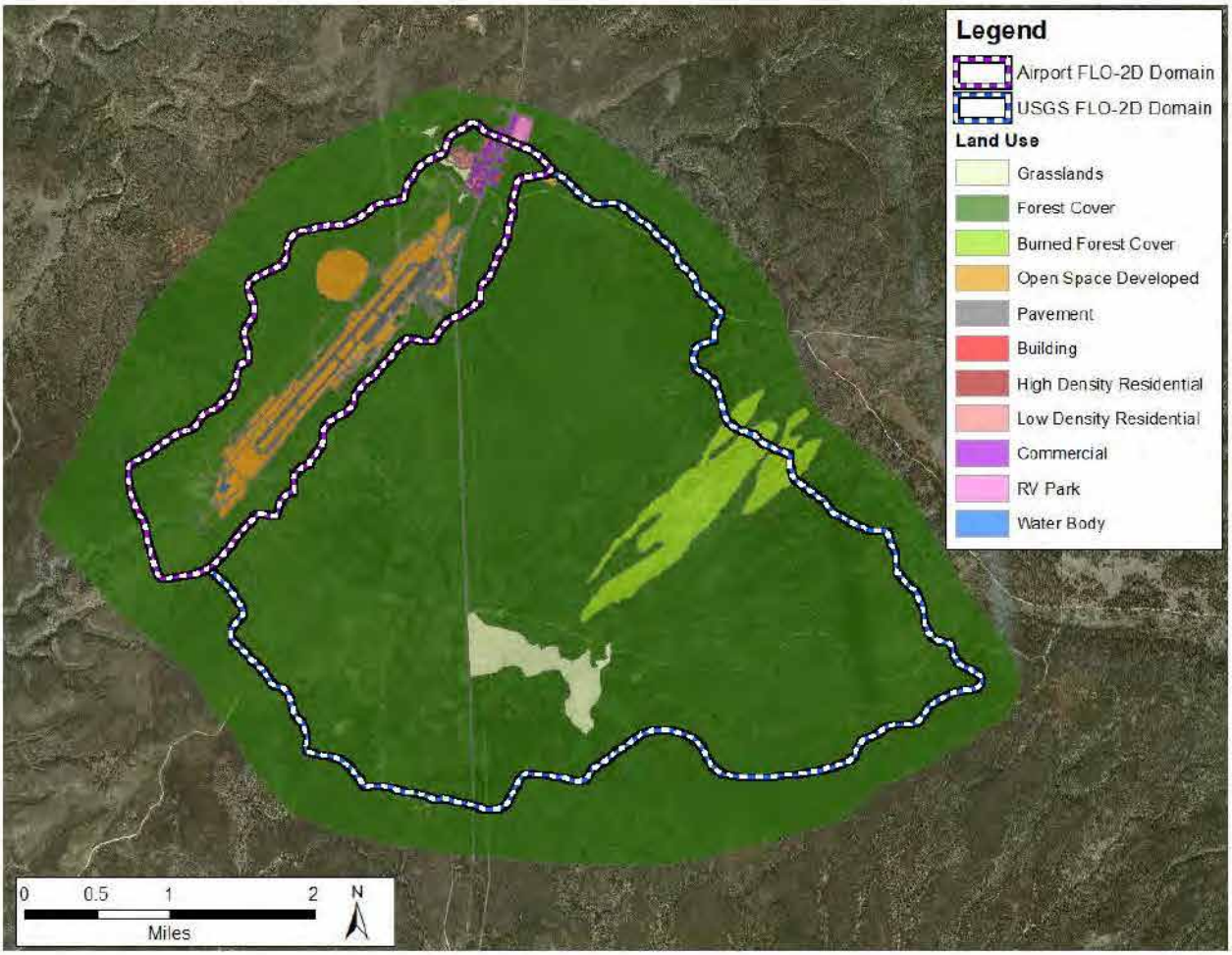

Figure 6.5.1 - Spatial Distribution of Land Use Classifications

Table 6.5.1 - Land Use Descriptions and Parameters for Both Domains

LU Code	Land Cover Description	Initial Abstraction (in)	Percent Impervious (%)	Initial Moisture Condition	Manning's n-Value
150	Grasslands	0.2	0	DRY	0.035
200	Forest Cover	0.35	0	DRY	0.045
220	Burned Forest Cover	0.15	0	DRY	0.03
300	Open Space Developed	0.1	10	NORMAL	0.03
310	Pavement	0.05	95	NORMAL	0.025
320	Building	0.05	95	NORMAL	0.025
330	High Density Residential	0.25	40	NORMAL	0.035
340	Low Density Residential	0.25	30	NORMAL	0.04
350	Commercial	0.1	80	NORMAL	0.03
380	RV Park	0.1	60	NORMAL	0.03
400	Water Body	0.05	100	NORMAL	0.025

6.5.2 SOIL TYPE [HELM]

NRCS Soils Survey data is unavailable for this area, thus, the Terrestrial Ecosystem Survey (TES) of the Kaibab National Forest was obtained from the USFS and is used to represent the spatial soil distribution across the model domains (**Figure 6.5.2 - Spatial Distribution of Soil Classifications**). The soil texture classifications were identified for each TES soil unit. The ADOT hydrology manual was used to determine the XKSAT (hydraulic conductivity (in/hr)), PSIF (wetting front capillary suction (in)), and DTHETA (volumetric soil moisture deficit at the start of rainfall (in): DTHETA Normal is based on field capacity and DTHETA Dry is based on wilting point) values, summarized in **Table 6.5.2 - Soil Classifications and Parameters for Both** Domains. The soil depth was set to 8 inches, which represents the limiting infiltration depth in the model. In general, the primary soil texture for the watershed is a Sandy Loam.

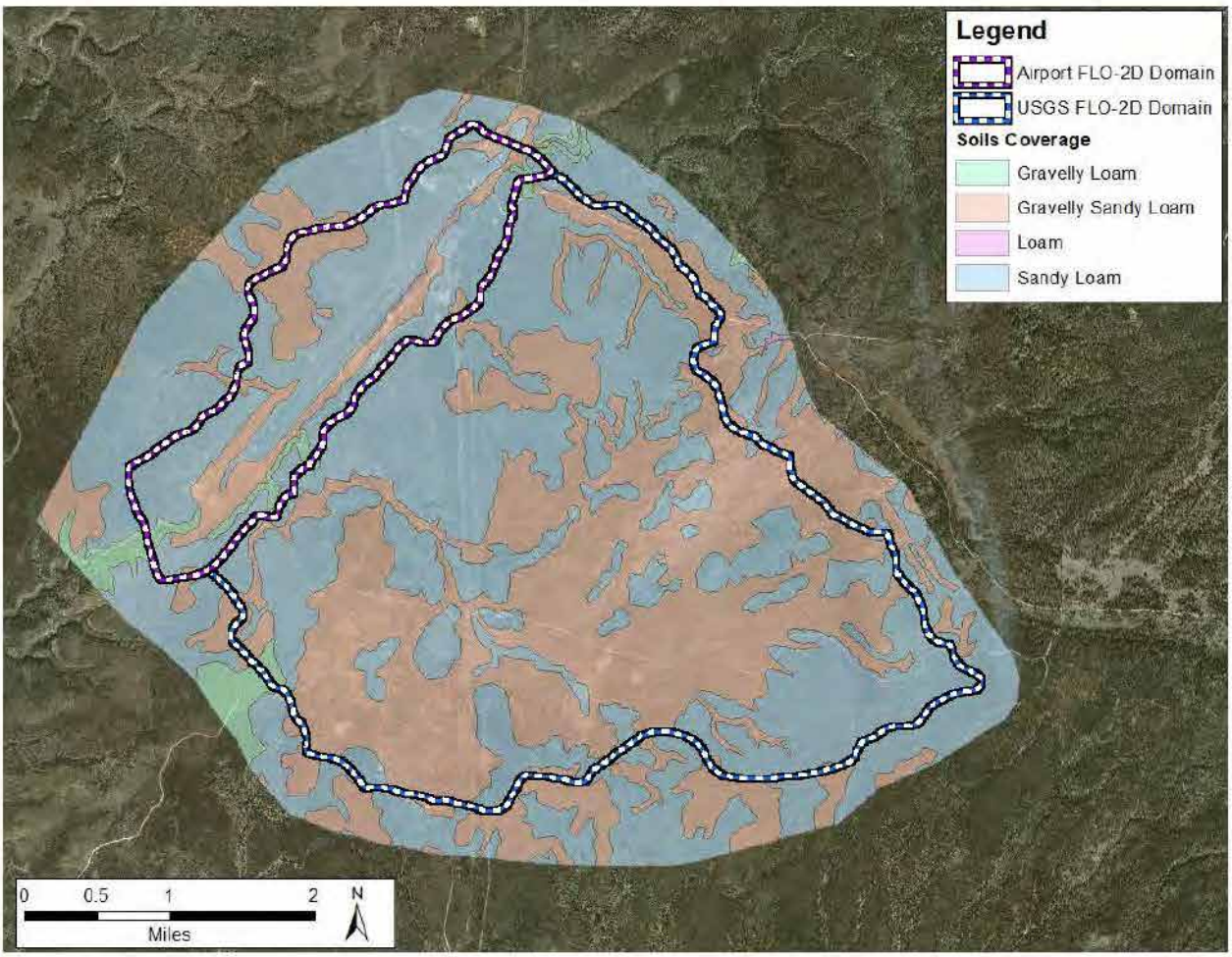

Figure 6.5.2 - Spatial Distribution of Soil Classifications

Table 6.5.2 - Soil Classifications and Parameters for Both Domains

Soil Code	Soil Description	PSIF (in)	XKSAT (in/hr)	Rock %	DTHETA Dry	DTHETA Normal	Limiting Infiltration Depth (ft)
1	Gravelly Loam	9.15	0.13	0	0.28	0.152	0.67
2	Gravelly Sandy Loam	4.71	0.49	0	0.326	0.24	0.67
3	Loam	8.19	0.19	0	0.28	0.152	0.67
4	Sandy Loam	2.97	0.74	0	0.326	0.24	0.67

6.6 AREA REDUCTION FACTOR (ARF)

Building classifications are obtained from the land use shapefile to represent area reduction factors. Area reduction factors are a reduction on the area in each grid cell available for floodplain storage and are represented in the Airport model using the ARF.DAT input file. The USGS model did not have any building footprints, thus no area reduction factors were applied.

6.7 HYDRAULIC STRUCTURES

To represent hydraulic structures in the FLO-2D model, a rating table is developed for each structure and stored in the HYSTRUC.DAT data file. Hydraulic structures considered hydraulically significant within the Airport model domain include 25 culverts and 32 catch basins. Culvert rating tables were modeled using the HY-8 Culvert Hydraulic Analysis Program and culvert specifications were obtained from design drawings and field verification. Catch basin rating tables were developed using the inlet capacity for each inlet. Due to a large proportion of hydraulic structures flowing to one storm drain near the southern end of the runway, a maximum discharge capacitance was calculated using the dimensions of the storm drain and assigned in FLO-2D. The collective inflow to the storm drain is then limited to the maximum allowable discharge through the pipe.

6.8 MODELING RESULTS

Exhibits of FLO-2D model results are shown for each model domain in **Appendix C.4**. Exhibits include Maximum Flow Depth, Maximum Combined Discharge, and Maximum Flow Velocity for each storm event, with floodplain cross-section peak discharges shown at 155 locations.

Generally, the USGS watershed does not generate substantial runoff for the 1-year and 2-year storm events; however, there are a few areas in the Airport domain with significant flow depth, even for the 1-year storm event. These areas are identified in **Figure 6.8.1 – Drainage Concern Areas with 1-year, 24-hour Storm Maximum Flow Depths**. As the storm event size increases, more flow from the upstream watershed is generated. Significantly greater discharges and flow depths are modeled in the USGS watershed for the 50-year and 100-year storm events.

The largest proportion of upstream flow into the Airport domain is in the southeast section, just north of the apron, where flow is directed to a 11'x 5'3" concrete arch culvert (**Figure 6.8.2**). High discharge is modeled at the outfall of the main storm drain near the southeast corner of the taxiway for all storm events. This is expected as a large proportion of hydraulic structures and the largest amount of upstream flow drains to this outfall.

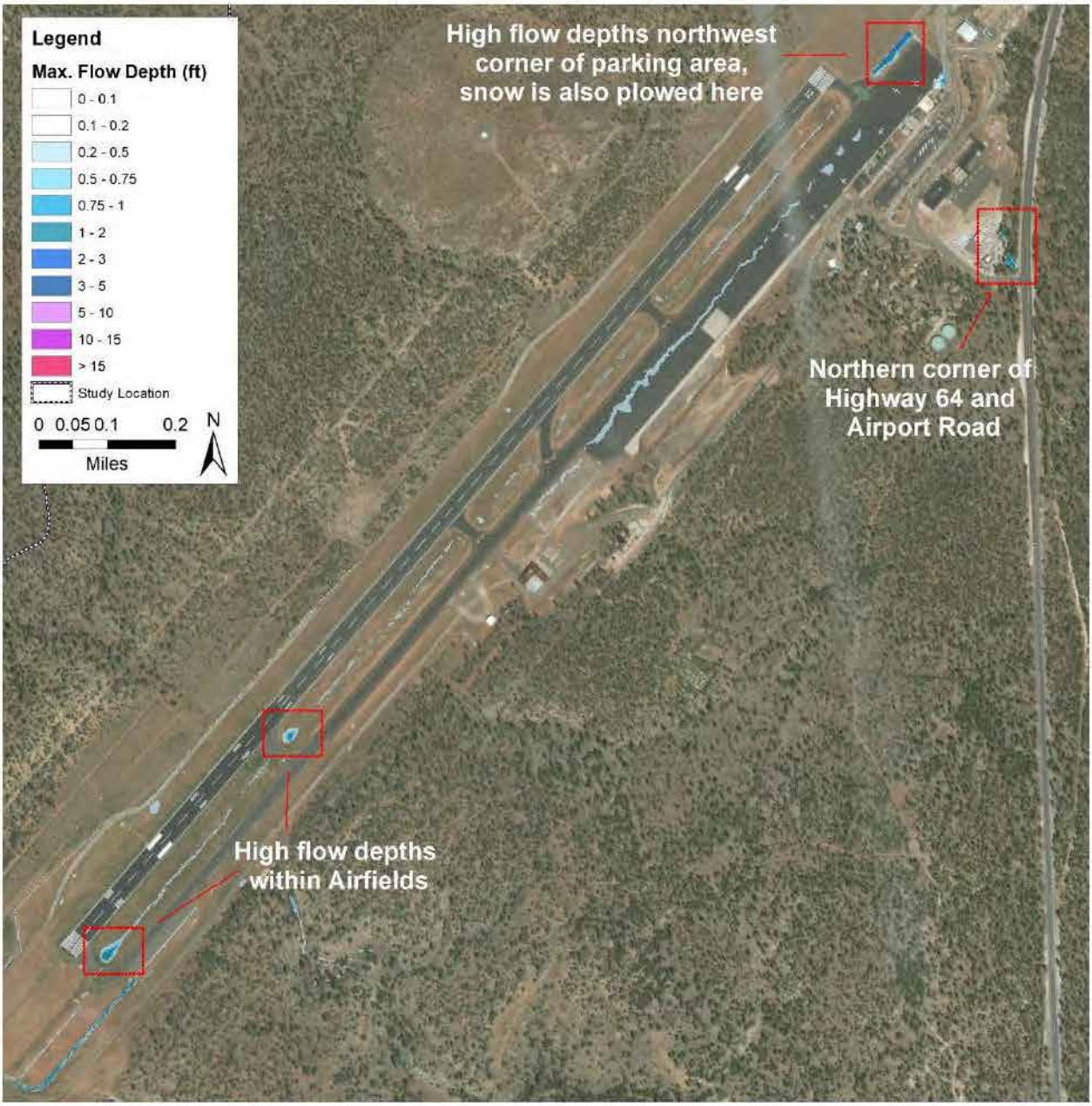

Figure 6.8.1 - Drainage Concern Areas with 1-year, 24-hour Storm Maximum Flow Depths

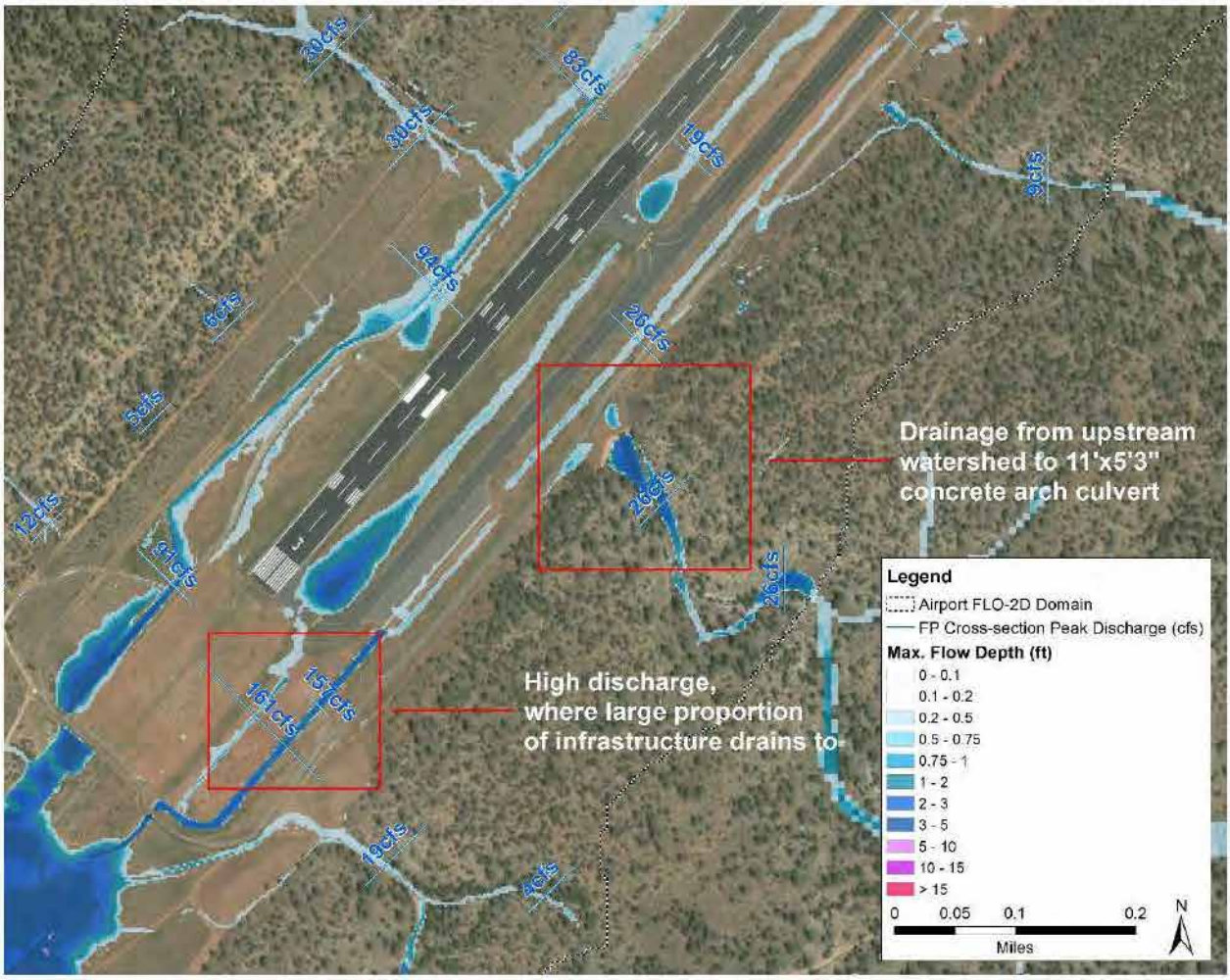

Figure 6.8.2 - Upstream Drainage and High Discharge Areas with 10-year, 24-hour Maximum Flow Depths and Cross Section Peak Discharges

6.9 CALIBRATION

To validate the FLO-2D models, a HEC-1 model was developed for each computational domain (Airport and USGS) to estimate total infiltration loss. The losses that occur in the HEC-1 models over each study area are compared to the losses computed in each FLO-2D model. The comparison helps to validate the estimated FLO-2D limiting infiltration depth. The HEC-1 models were developed as a single basin model for each domain for the 100-year 24-hour storm event. Temporal distribution and average rainfall depth, XKSAT, PSIF, IA, DTHETA, and RTIMP from each FLO-2D model were used for each HEC-1 model. **Table 6.9.1** summarizes infiltration loss percentage for each model domain in HEC-1 and FLO-2D. The infiltration loss percentages compare well between the two models, validating the 8-inch limiting infiltration depth set for the FLO-2D models.

Table 6.9.1 - Infiltration Loss Comparison to HEC-1 Models for Both Domains

Domain	HEC-1 Infiltration Loss %	FLO-2D Infiltration Loss %
Airport	64.0%	60.0%
USGS	72.1%	71.1%

6.9.1 MODEL RESULTS COMPARED TO HISTORIC FLOODING

Model results indicate high flow depths and high discharge in areas where flooding or ponding had previously been noted by operations staff (**Section 0**). Specifically, the airfields exhibit higher flow depths, especially the southern airfield (see Exhibits in **Appendix C**). The northern corner of Highway 64 and Airport Road exhibits some of the largest flow depths in both modeling domains for each of the storm events. Another area of high flow depth is at the northwest corner of the aircraft parking area, which is also used to stockpile snow.

As an example, FLO-2D modeling results for the 10-year, 24-hour storm event show: (1) Up to 3 feet of flow depth occurs in the north and central airfields, (2) approximately 4.25 feet occurs in the most southern airfield, and (3) up to 6 inches occurs on the taxiway due to overflow from the airfields (**Figure 6.9.1**). Additionally, the area northwest of the aircraft parking area, where snow is plowed, sees significant water depth (about 3.5 feet). The northern corner of Highway 64 and Airport Road has up to 13 feet of maximum flow depth (**Figure 6.9.1**) for the 10-year, 24-hour storm event.

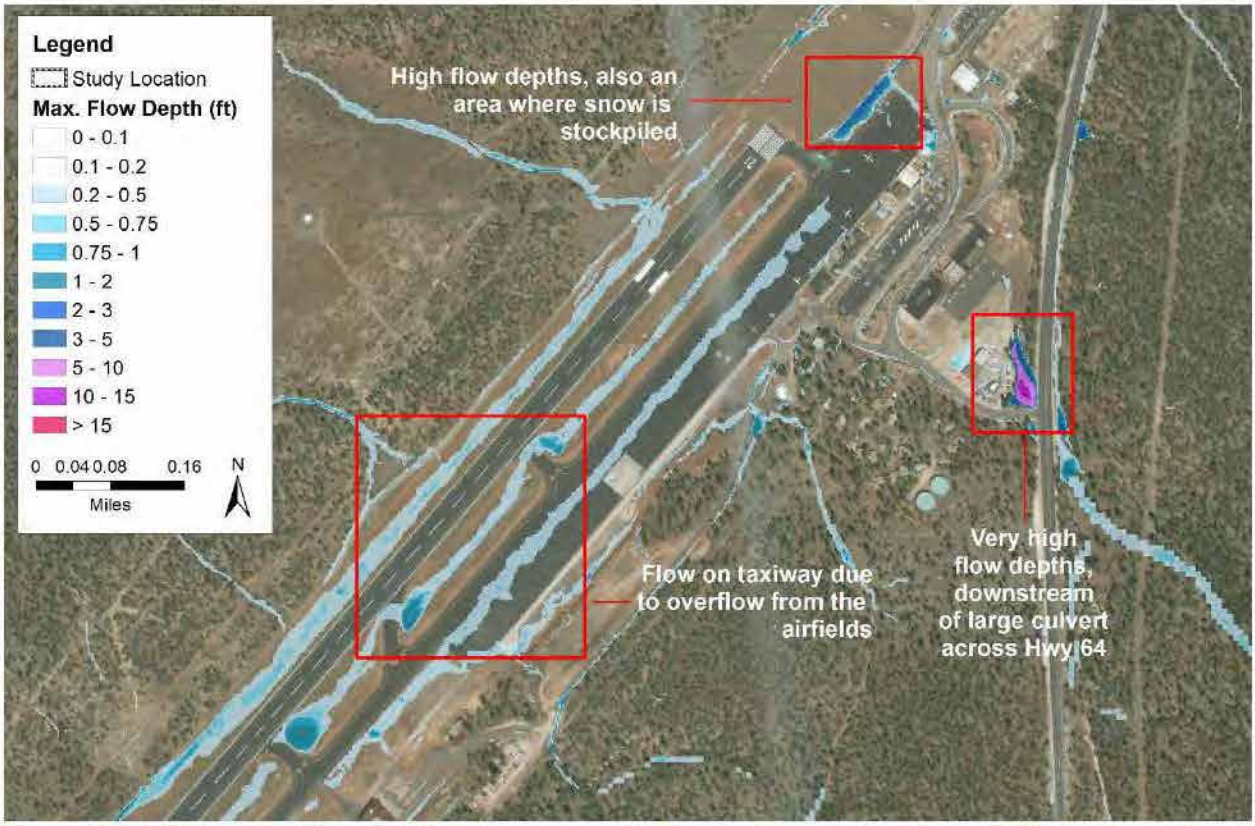

Figure 6.9.1 - Maximum Flow Depth Concern Areas in Airport Domain for 10-year 24-hour Storm Event

6.10 DRAINAGE INFRASTRUCTURE PERFORMANCE EVALUATION

6.10.1 Existing Drainage Infrastructure

The FAA recommends that the 5-year design storm event be used with no encroachment of runoff on taxiway and runway pavements. There is one taxiway (Taxiway C) on the north side of the GCN runway, serviced by a 21-inch culvert, 021, that has flow depths of approximately 0.25 feet on the taxiway during that storm event (**Figure 6.11.3**). The airfield generally exhibits larger flow depths and spills onto the taxiway for the 10-year and larger storm events (**Figure 6.9.1**). However, the center 50% of taxiway is free from flow for the 10-year storm event, which is acceptable by FAA standards. Future drainage improvements to be included in the upcoming Drainage Master Plan will need to evaluate this location further.

There are appreciable flow depths through the aircraft parking area for all storm events, which eventually drains southwest to a 2.5' concrete culvert and catch basins. The large flow depths at the Highway 64 and Airport Road intersection, is at the outfall of a 3.5' culvert from across the highway and a 2' culvert from across Airport Road. If this area is a potential wildlife hazard, the drainage may need to be improved. For the larger storm events (50-year and 100-year), there is considerable spillover near many of the hydraulic structures. The culverts or catch basins are unable to capture all the flow for these significant events.

6.11 RSA and TSA ENCROACHING DRAINAGE INFRASTRUCTURE

As mentioned in the new GCN Airport Master Plan, *"Certain portions of the airfield between Runway 3-21 and parallel Taxiway P do not meet RSA grading standards due to a series of culverts that aid in airfield drainage."* This standard is specified in FAA Advisory Circular AC 150/5300-13A which precludes culvert headwalls from being in either RSAs or TSAs. The general intent of the circular is to allow aircraft to transverse the RSA and TSA in case of emergencies without encountering such features as drainage ditches or *"...hazardous ruts, humps, depressions, or other surface variations."*

At GCN the RSA is defined as being 250 feet each side of the runway centerline. The TSA is defined as being 59 feet each side of the taxiway centerlines. Based on these dimensions, nearly all the culverts that are currently located in the airport infield areas do not meet the requirements of Advisory Circular AC 150/5300-13A. **Table 6.11.1** lists the culverts which will require relocation of their headwalls or replacement of the culverts. Also see **Figure 6.11.1** and **Figure 6.11.2**.

Table 6.11.1 – Airside Culverts Requiring Relocation

Name	Dia. (in)	Relocation Required?
Culv_002	24	No
Culv_003	72x60	No
Culv_006	24	No
Culv_007	24	No
Culv_008	15	Yes
Culv_010	24	No
Culv_012	24	Yes

Name	Dia. (in)	Relocation Required?
Culv_018	21	Yes
Culv_019	21	Yes
Culv_020	15	Yes
Culv_021	21	Yes
Culv_022	30	No
Culv_023	24	No

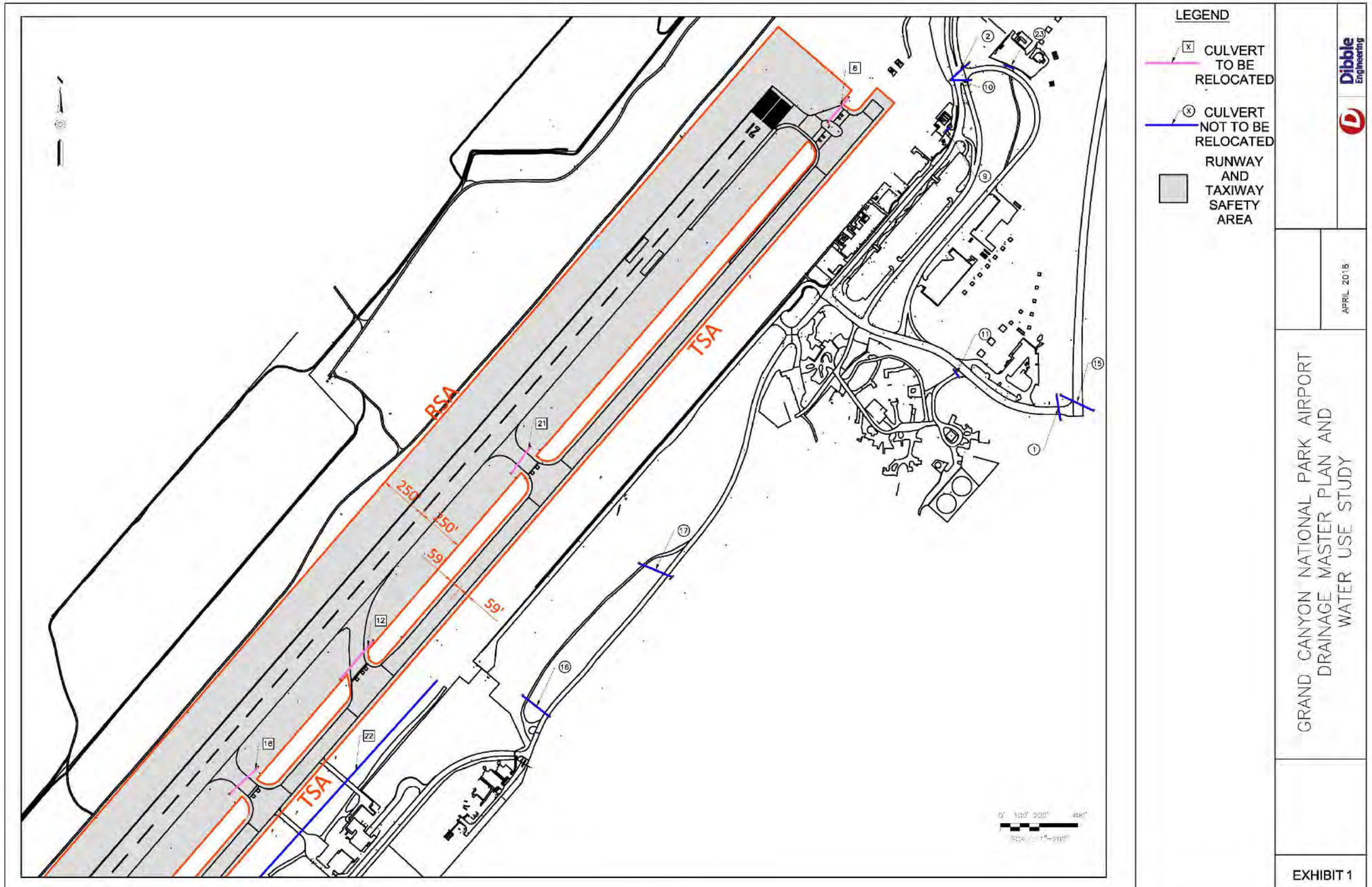

Figure 6.11.1 - Culverts Requiring Relocation (North)

This Page Intentionally Left Blank

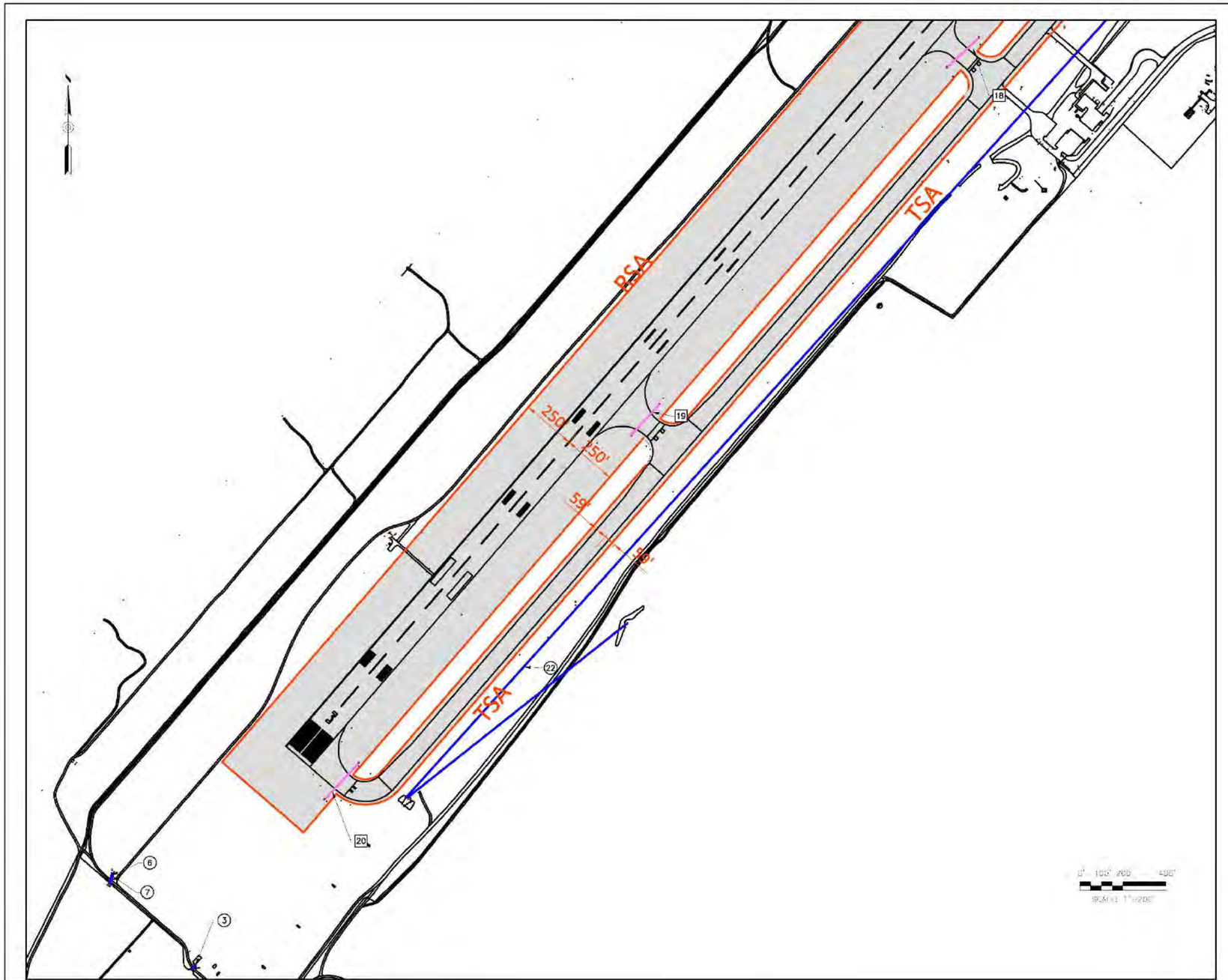

LEGEND

- CULVERT TO BE RELOCATED
- CULVERT NOT TO BE RELOCATED
- RUNWAY AND TAXIWAY SAFETY AREA

Dibble Engineering

APRIL 2018

GRAND CANYON NATIONAL PARK AIRPORT
DRAINAGE MASTER PLAN AND
WATER USE STUDY

EXHIBIT 2

Figure 6.11.2 - Culverts Requiring Relocation (South)

This Page Intentionally Left Blank

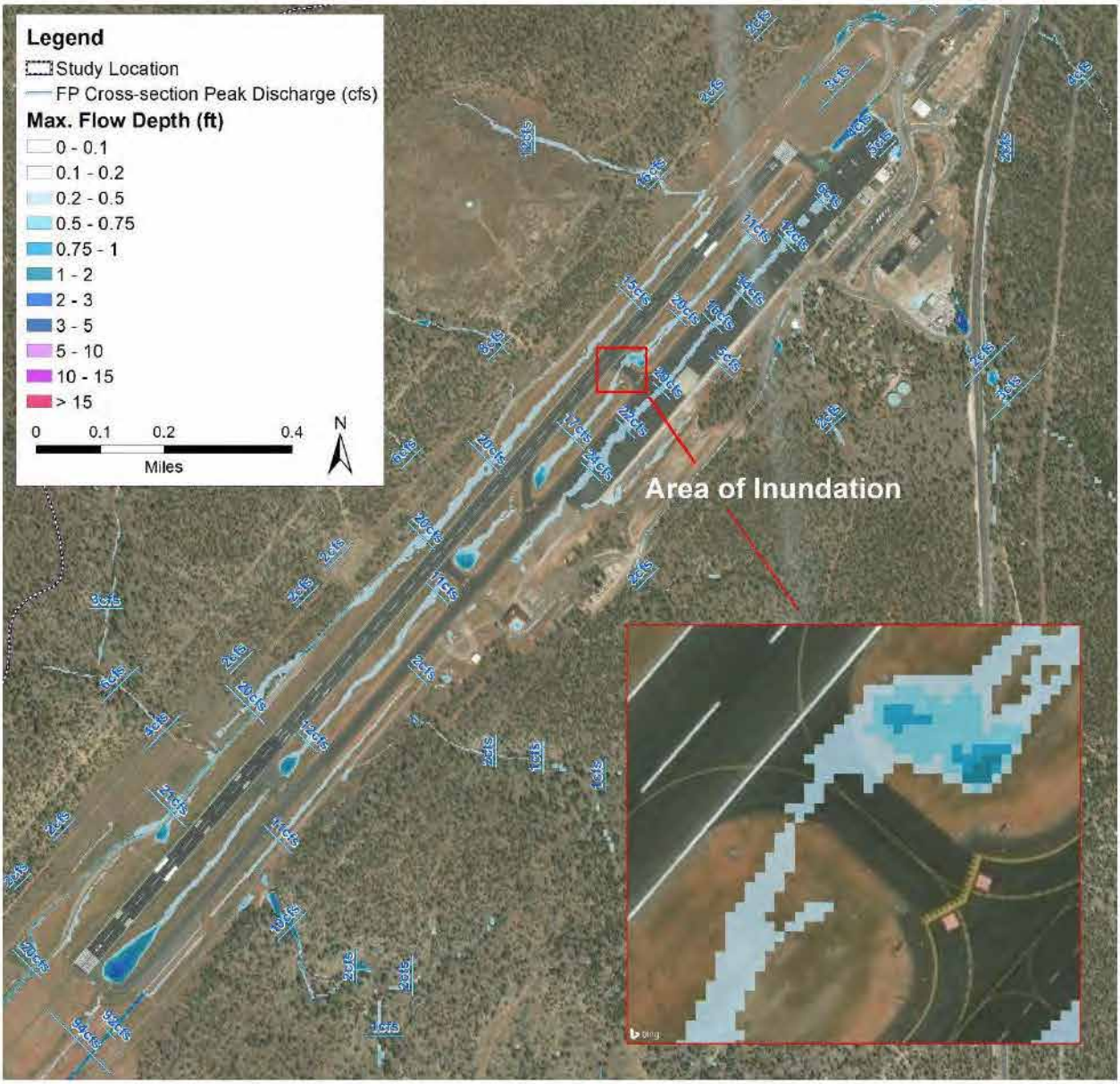

Figure 6.11.3 - Maximum Flow Depths around Runway and Taxiway for 5-year 24-hour Storm Event

6.12 ESTIMATED ANNUAL WATER BUDGET

One goal for this study is to estimate the amount of surface water that may be feasible for capture, storage, treatment and distribution as potable water at GCN. Therefore, an expected annual surface water budget has been developed. Three alternatives for capturing potential surface water at GCN have been developed and are summarized in

Table 6.12.1. A more detailed description of each alternative is also provided.

Table 6.12.1 – Potential Water Available for Capture at GCN

Capture Scenario	Description	Area (acres)	Annual Water Available for Capture (ac-ft)	Annual Water Available for Capture (gal)
1	Aircraft parking apron only	29.7	35.5	11,567,711
2	All impervious areas within GCN	113.6	135.8	44,250,566
3	Airport model domain includes all land use types	2012.5	462.2	150,608,332

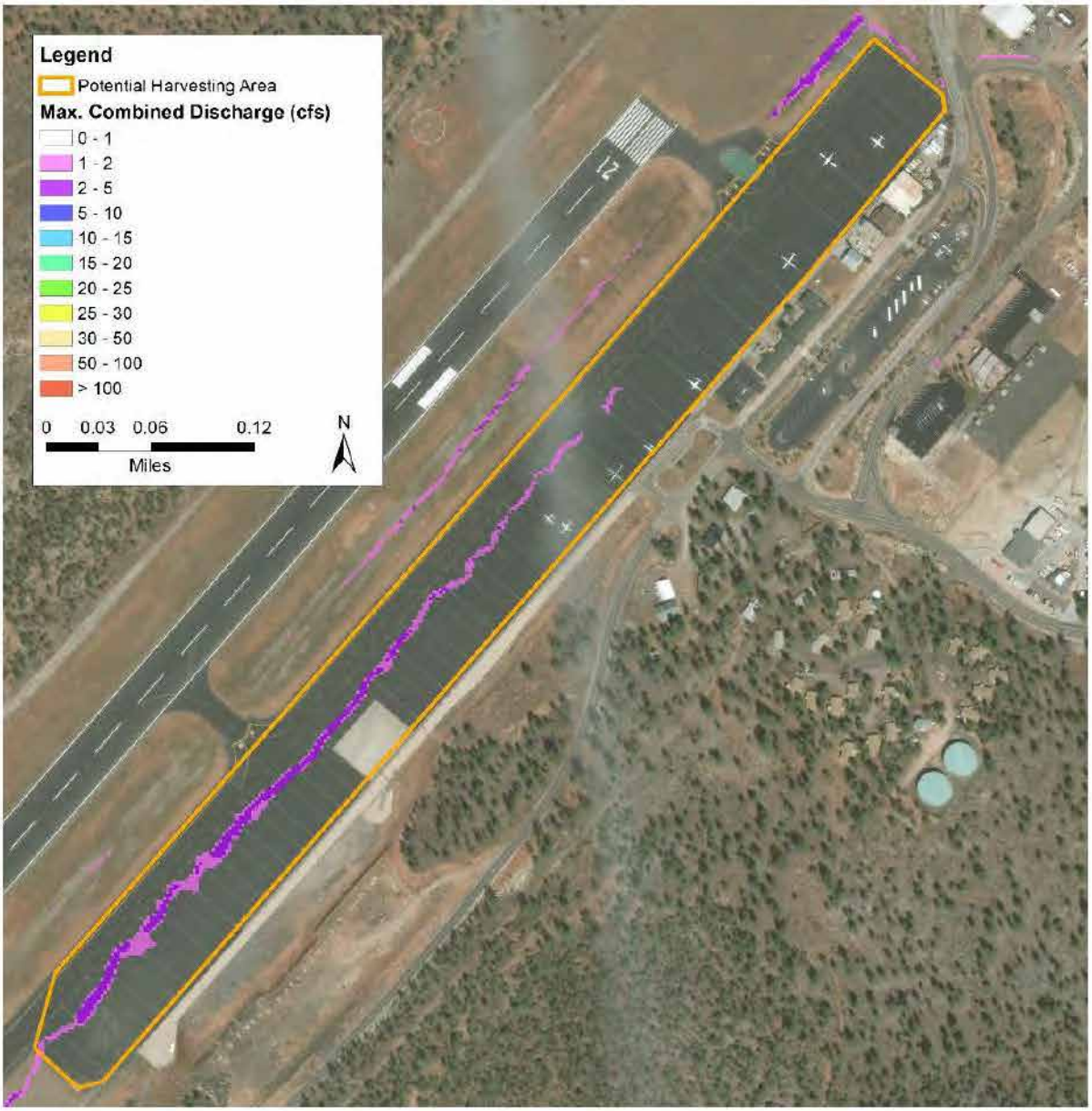

Figure 6.12.1 - Potential Harvesting Area with Maximum Discharge for 1-year 24-hour Storm Event to shown General Flow Pattern

The average annual precipitation at GCN is 15.94 inches (NOAA Grand Canyon National Park #2, Network: GHCND, Station ID: USC00023596, approximately seven miles north of GCN). A direct approach to estimate water available for capture is to consider only impervious areas within GCN, where most rainfall events would generate runoff.

6.12.1 CAPTURE SCENARIOS 1 & 2 – AVERAGE ANNUAL RUNOFF ON PAVENT ONLY

For Capture Scenario 1, the amount of water available for capture was calculated for the aircraft parking apron, which has an area of approximately 29.7 acres (shown in **Figure 6.12.1**). A runoff coefficient of 0.90 is used (pavement surface). With an annual precipitation of 15.94 inches, approximately 35.5 acre-feet of water will be available for capture. This value exceeds the current water use of 8 acre-feet per year at GCN.

Capture Scenario 2 also uses this direct approach and considers all impervious surfaces within the GCN boundary, which is approximately 113.6 acres. Based on an annual precipitation of 15.94 inches and a runoff coefficient of 0.90, approximately 135.8 acre-feet of water will be available for capture per year. This value easily exceeds current annual water use of 8 acre-feet.

6.12.2 CAPTURE SCENARIO 3 – CONSIDER INITIAL ABSTRACTION FOR ENTIRE AIRPORT

Another approach to estimate water available for capture is to only consider rainfall events that are greater than initial abstraction, thus ensuring runoff is generated and allowing for a broader estimate of water available for capture from all surface types. For Capture Scenario 3, an initial abstraction of 0.35 inches is used as it is the largest, most conservative value among the land cover types (Table 6.12.1). Historical rainfall records (NOAA Grand Canyon National Park Airport, Network: GHCND, Station ID: USW00003195) were evaluated from 1998 to 2017. Outliers were calculated as events greater than 1.23 inches, based on the average rainfall event size ± 3 standard deviations, and omitted for this analysis.

The annual total precipitation from rainfall events that were greater than 0.35 inches and less than 1.23 inches was computed for each year, with initial abstraction subtracted out from each event. The average annual precipitation for these events is 2.76 inches, which is equivalent to the amount of water that is expected to runoff. **Figure 6.12.2** shows the historical rainfall record. The gray area indicates the precipitation events that were identified to generate runoff (greater than initial abstraction = 0.35 inches) yet aren't considered outliers (less than 1.23 inches). Using an annual precipitation of 2.76 inches, the amount of water that would be available for capture per year is 462.2 acre-feet from the airport domain. This value is less than the surface water allocation of 7,678.78 acre-feet per year and far greater than the annual water uses of 8 acre-feet.

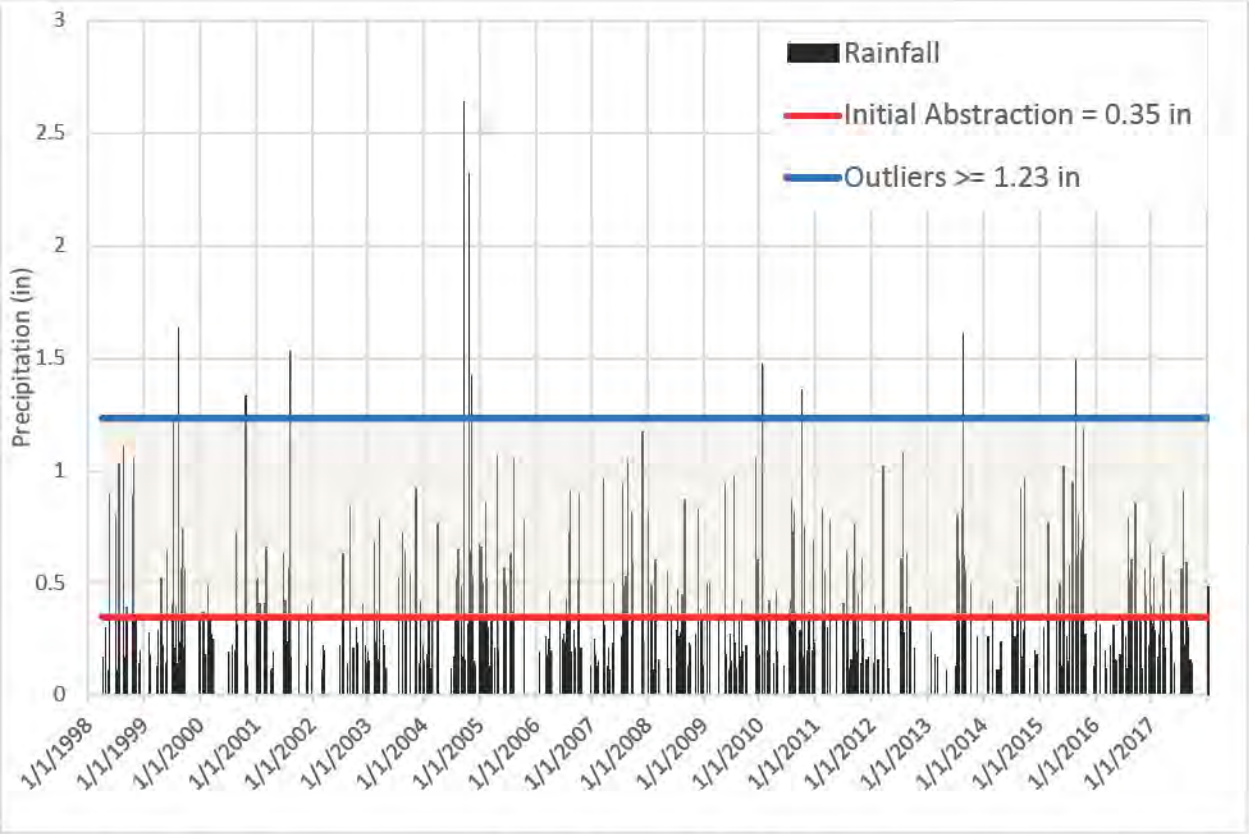

Figure 6.12.2 - Rainfall Events at Grand Canyon National Park Airport (Network: GHCND, Station ID: USW00003195)

Modeling results indicate that no runoff occurs from the USGS domain to the Airport domain for the 1-year 24-hour storm event. Thus, water available for capture from the USGS domain was not considered as the events that would be targeted for capture are smaller than the 1-year 24-hour storm event depth of 1.47 inches. It is also worth noting that snowfall was not considered during estimation of available water for capture.

Section 7.0: EXISTING CONDITION ANALYSIS – WATER

7.1 WATER TREATMENT FACILITIES EVALUATION

The GCN SWTF O&M produced in 1999 provides a thorough description of the original system design conditions and equipment. The GCN SWTF O&M manual has been provided in digital format for reference in **Appendix A.1**. This study serves as an overview and evaluation of the existing equipment with the intent of returning the system to the original design conditions. This evaluation is not intended to redesign the facility to increase capacity, efficiency or to recommend technological upgrades. However, treatment elements which do not meet modern code requirements have been identified, and modifications have been recommended.

This Section refers heavily to Chapter 3 of the original GCN SWTF O&M manual (**Appendix A.1**) and follows the general outline of Chapter 3 of the original design report and comments on all major equipment identified in that chapter. Please refer to Chapter 3 of that document for a detailed description of material selections and design parameters.

7.1.1 Process Flow

Though an atypical design, the Grand Canyon Water Treatment Facility was a complete surface water treatment facility; complete with all major surface water treatment components. See **Figure 7.1.1 - General Process Flow Diagram** below. This figure was taken from Chapter 1 of the GCN SWTF O&M manual.

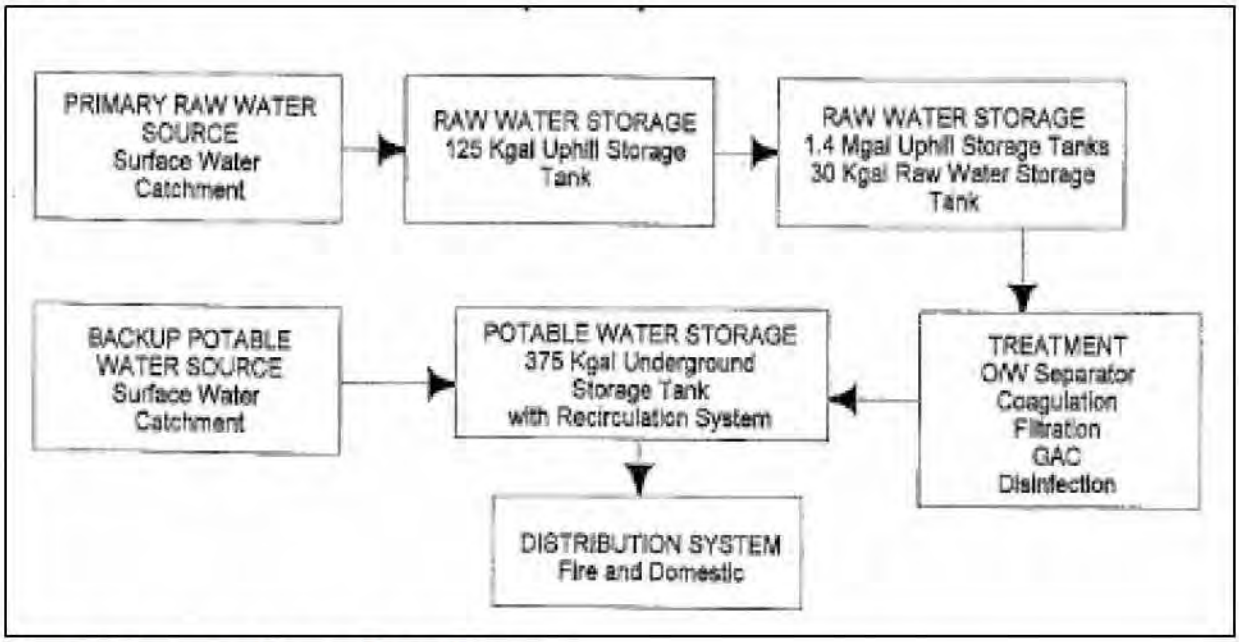

Figure 7.1.1 - General Process Flow Diagram

Also see **Figure 7.1.2** for a more detailed view of the system flow diagram. **Figure 7.1.2** was taken from Chapter 3 of the GCN SWTF O&M Manual.

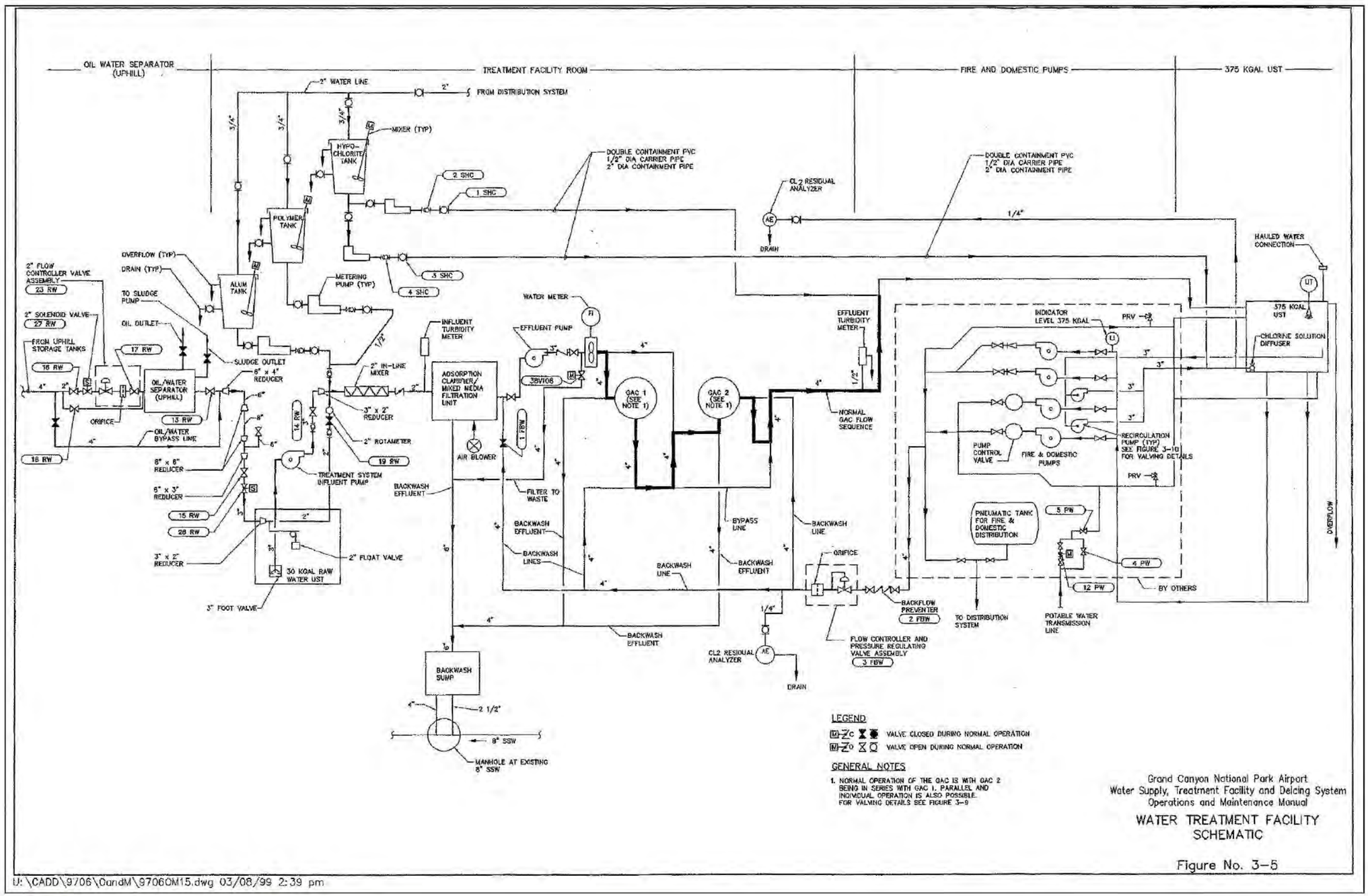

Figure 7.1.2 - Original Process Flow Diagram

This Page Intentionally Left Blank

7.1.2 *Pretreatment Facilities*

Pretreatment Facilities consist of the following elements:

- 125,000-gallon Uphill Storage Tank (Chapter 2.3.1.1 from GCN SWTF O&M)
- BTEX/PAH Monitoring System (Chapter 2.3.1.1 from GCN SWTF O&M)
- Oil Water Separator (Chapter 3.2.1 from GCN SWTF O&M)

7.1.2.1 General Operation – Original Configuration

Untreated surface water was conveyed from the Catchment Area (airport infield) Pump Station via an 8-inch DIP line to the uphill 125,000-gallon storage tank. Before discharging into the 125,000-gallon storage tank, the surface water was continuously tested for the presence of BTEX/PAH. BTEX is benzene, toluene, ethylbenzene and xylene. PAH is polyaromatic hydrocarbons. These families of chemicals are most commonly associated with oil/petroleum products and are known carcinogens. Presence of these compounds was under constant monitoring since the source water for the system originated in the catchment area located between the airport runways, which could have become impacted by jet fuel or deicing chemicals. If BTEX/PAH was detected in the untreated surface water, the Catchment Area Pump Station pump was shut down automatically. Should this occur, impacted water stored in the Catchment Area and in the 125,000-gallon storage tank would then be drained manually to the onsite stormwater or sanitary sewer system.

The 125,000-gallon tank was designed as a pre-sedimentation (Presed) tank to trap heavy materials and floatable materials which entered the tank. For this report, this tank will be referred to as the Presed Tank. After passing through the Presed Tank, water was conveyed to the two (2) Raw Water Uphill Storage Tanks (1.4 Million gallons each). From the Raw Water Storage Tanks, raw water was conveyed by an 8" DIP line to the 30,000-gallon underground raw water storage tank beneath the treatment facility at the terminal building. In route to the 30,000-gallon underground raw water storage tank, the raw water passed through an oil water separator.

7.1.2.2 Oil Water Separator

The Oil Water Separator (OWS) is a simple gravity driven device which is discussed in detail in Chapter 3.2.1 of the GCN SWTF O&M Manual. The OWS serves to protect the treatment system from floating contaminants such as grease or oil as well as other floating materials. Oil and grease could have a serious impact on the clarifier/filter media. The clarifier/filter unit will be discussed in greater detail in **Section 7.1.3.2**.

Per the original plant operation, as the untreated surface water was conveyed from the two 1.4-million-gallon uphill raw water storage tanks by gravity to the 30,000-gallon raw water storage tank, it passed through the OWS. The flow rate was maintained at 85 gallons per minute (gpm) by a flow control valve at the inlet of the OWS. As contaminants built up in the OWS, they were pumped from the bottom of the OWS hopper by a progressive cavity pump into a bin on a weight scale/switch. When a predetermined weight of material had been collected, the operator was alerted to a full container.

Today, the body of the stainless-steel Ellis Corporation OWS Model OWS-048 appears in good condition. The unit's internal PVC baffle is brittle to the touch and will require replacement. The OWS would also require emptying, a thorough cleaning and disinfection prior to bringing it back online. Please see **Figure 7.1.3 – OWS Body and PVC Baffle** below which displays current pictures of the OWS.

Figure 7.1.3 - OWS Body and PVC Baffle

7.1.2.3 Observations and Recommendations

Beyond the body, all other equipment including piping, flow control valve, the dumpster and pump are no longer present or are non-operational. However, replacements for all these items would be readily available today.

As stated previously, the PVC baffle is brittle to the touch and will require replacement.

The radio communications system appears to be operational, therefore, it is likely that all the equipment related to the OWS could be readily replaced and tied into the communication system if needed.

7.1.3 Water Treatment Facility

The Water Treatment Facility Consists of the following elements:

- Package Treatment Plant and Associated Chemical Facilities (Section 3.3.1 from GCN SWTF O&M)
- Granular Activated Carbon (GAC) Filters (Section 3.3.2 from GCN SWTF O&M)
- Backwash System (Section 3.3.1.6 from GCN SWTF O&M)

7.1.3.1 30,000 Gallon Underground Raw Water Storage Tank

Beneath the Water Treatment Facility (SWTF) at the terminal building is a 30,000-gallon underground raw water storage tank that the SWTF pumps drew from. In essence, it is a very large day tank for the SWTF. To note, this basin was observed to the best of our ability as it is a confined space. There are floor hatches located in the SWTF which were opened for visual observation. The tank contained approximately 6-inches of water. The source of water is unknown; however, no foul odors were noticeable upon opening

the hatch and the water seemed clear. Though uncertain, it is likely that the source of water can easily be identified, and the tank repaired to a serviceable condition. It should also be noted that this tank can be bypassed and the SWTF be fed directly from the two 1.4-million-gallon uphill raw water storage tanks.

7.1.3.2 Package Treatment System

The first stage of the SWTF treatment train design is the Package Treatment System. The Package Treatment System is a U.S. Filter Trimite Model TM-75A clarifier and mixed media adsorption. The Trimite 75 is designed to reduce effluent turbidity to under 0.5 NTU.

Particle removal through the clarifier/filter was facilitated by enhanced coagulation. The main coagulant used in this system was alum. A polymer was also added to increase the formation of flock, which increases clarifier/filter performance. The polymer used at this facility was polyacrylamide. Both chemicals were injected into the unit influent prior to a rapid mixer.

7.1.3.2.1 General Operation

As originally built and operated, the package system's influent pump drew 85 gpm from the 30,000-gallon underground raw water storage tank. Before reaching the package unit, alum and/or coagulant was injected into the raw water and it passed through a rapid mixer. The amount of alum/polymer dosed into the influent was based on the turbidity of the influent as measured continuously by a turbidity monitor. Once entering the unit, the raw water moves upward through the clarifier and over a weir. Once over the weir the water passed downward through a mixed media filter. The package unit's effluent pump pulled water from the bottom of the unit and conveyed the water to the Granular Activated Carbon (GAC) Adsorption Columns which are discussed later in this section.

As the filter removed particles from the water, the spaces between media particles became filled. This forced some water to channel around the media and allowed turbid waters through. This turbid water would eventually break through the following GAC adsorption columns (to be discussed later in this section) and be detected by the effluent turbidity monitor. When elevated levels of turbidity were detected at the effluent monitor, a backwash of the mixed media filter was initiated. The backwash water was supplied from the distribution system. The backwash pressure and flow rate were controlled by Cla-Val flow control valves. The backwash waste was conveyed to an underground stilling basin which controls the rate at which the backwash was added to the plant sanitary sewer system.

7.1.3.3 Observations and Recommendations

The package treatment plant vessel appears to be in excellent condition. No rust or structural issues were readily observable. Conditions of internal PVC or elastomeric components were not readily observable. However, it is anticipated that these components would have readily available replacements if needed.

A large amount of filter media is present. If the media observed in the unit is the original media installed, it is NSF 61 certified, very simple and is still the modern recommended media to be used with this unit according to the (manufacturer) U.S. Filter representatives. The volume of the media was not able to be determined. According to U.S. Filter, it is likely that this media is still in good condition. It is probable that a couple of backwashes would return the media to its original condition.

Without water or electricity, it was not possible to determine hydraulic integrity of the unit, or to operate the ancillary equipment such as pumps, actuated valves, or the air scour blower.

All associated equipment should be evaluated for NSF certification. Those components not meeting NSF requirements may need to be replaced with a modern NSF alternative.

All small diameter chemical piping will require replacement. Much of the chemical storage and dosing equipment and components would require replacement, including the metering pumps. Replacements for these components would be regularly available. **Figure 7.1.4** displays an image of the interior of a typical chemical line.

For a more thorough condition assessment of the unit, Dibble recommends engaging U.S. Filter to perform a unit condition report. For the most thorough evaluation, power and a water source must be available at the time of the assessment. A contractor would likely be required to provide these temporary power/water connections. Dibble spoke with U.S. Filter regarding this unit and they are interested in evaluating the unit as part of a maintenance agreement. A basic agreement for a one-day visit to evaluate the equipment would be on the order of $5,000.

Zane Wilsterman, an electrical engineer with Controlled Energy Engineers, was consulted regarding the condition of electrical and instrumentation equipment at GCN. Mr. Wilsterman has extensive experience with water and wastewater systems. Based on his review of the facility drawings, the GCN SWTF O&M manual, site photo's, conversations with maintenance personnel, and a desktop review of existing equipment, Mr. Wilsterman believes that the field instruments and analyzers will require replacement because they are antiquated or broken. Most of these instruments contain components made of rubber, plastics or elastomers that become brittle over time. Finding replacement components for these instruments may not be possible due to their age.

Plastics, rubbers and elastomers can become brittle and crack when left in the sun or in dry conditions for extended periods of time. It is probable that system components which contain any of these materials will not be fully functional when operated. That is not to say the equipment is not serviceable. Most equipment components made of these materials are intended to wear and be replaced.

Please see **Figure 7.1.4** for pictures of the Package Treatment System.

Mixed Media Filter

Chemical Storage Area

Controls

Rapid Mixer Interior

Figure 7.1.4 - Package Treatment System

7.1.3.4 Granular Activated Carbon (GAC) Filters

The next step in the SWTF treatment train were the GAC filters. Typically, a GAC filter is included as a polishing system in treatment facilities for the removal of taste and odor compounds. In this instance, the GAC filters were for the removal of trace levels of chemicals that were not removed by the previous treatment steps, such as trihalomethane precursors (THM's).

7.1.3.4.1 General Operation

The GAC filters were designed to run in series, though they could be run in parallel or individually with full flow. The filters were only operated in parallel or individually when one unit was in backwash or to facilitate maintenance. After the GAC filters, the filtered effluent is chlorinated and conveyed to the 375,000-gallon underground potable water storage tank.

Like all filters, GAC filters also require backwash to remove accumulated particulate materials. In the GAC columns, backwash was initiated based upon differential pressure (headloss) from the inlet to the outlet of the GAC columns. Backwash water was supplied from the distribution system and was controlled by Cla-Val flow control valves. The GAC filters have an automated system for backwash which was conducted using multiple automated ball valves. Backwash waste water was conveyed outside to a backwash catchment basin where it was slowly metered to the sanitary sewer system to keep from overloading the system with high flows. See **Figure 7.1.5** which displays current photos of the GAC units.

7.1.3.4.2 Observations and Recommendations

The GAC vessels appear to be in excellent condition. No rust or structural issues were readily observable. Internal conditions of the vessels were not readily observable. However, these units are relatively simple and it's likely that internal components are also in good condition. If the units were not drained prior to being shut down, then it is expected that the internal epoxy coating system would need to be sandblasted and reapplied. This is a typical O&M practice required approximately every 10 years.

It is assumed that the units are still filled with the original media. Unlike the media in the clarifier/filter, the GAC in these units is very likely spent and will require replacement according to U.S. Filter representative, David Leblanc. Each GAC unit contains 78.5 cubic feet (cu ft) of activated carbon media. Budgetary costs have been requested and will be provided upon receipt.

Without water or electricity, Dibble was unable to determine hydraulic integrity of the units, or to operate the associate equipment such as the actuated valves.

All associated equipment should be evaluated for NSF certification. Those components not meeting NSF requirements may need to be replaced with a modern NSF alternative.

The controls and electrical enclosures appear to be in good condition and are likely still functional.

For a more thorough condition assessment of the unit, Dibble recommends engaging U.S. Filter (or another entity regularly engaged in assessing GAC systems) to assess the equipment. For the most thorough evaluation, power and a water source must be available at the time of the assessment.

A Note:

Plastics, rubbers and elastomers can become brittle and crack when left in the sun or in dry conditions for extended periods of time. It is probable that system components which contain any of these materials will not be fully functional when operated. That is not to say the equipment is not serviceable. Most equipment components made of these materials are intended to wear and be replaced.

Filters and Valve Stack

Controller

Behind Units and Chlorinator

Figure 7.1.5 - GAC Filter and Associated Equipment

7.1.3.5 Backwash System

As discussed as part of the Package Treatment Plant and GAC Filter sections, backwash water for these units was provided by the distribution system. Cla-Val flow control valves in association with a flow meter controlled the backwash rates and pressures. Backwash for both units were conducted for 15 minutes at 20 gpm/sq ft. This results in 600 gallons of backwash waste for the mixed media filter and 1,350 gallons of backwash waste for GAC units. Backwash waste from each unit is conveyed to an underground catchment basin where it is slowly metered to the sanitary sewer system.

7.1.3.5.1 Observations and Recommendations

The backwash water supply components and piping are largely in place, though some piping modifications have been performed to accommodate the current facility design and operation.

Backwash waste components were more difficult to evaluate as they were buried/inaccessible. However, the fiberglass lid of the existing catchment basin was observed. It appeared in good condition, and based on experience with buried fiberglass components, it is likely the catch basin is in good condition as well.

A sanitary sewer manhole was also observed near the catchment basin. It is unknown if the catchment basin is still connected to the sanitary sewer; however, should a connection be desired it appears to be readily available.

7.1.3.6 General System Observations and Conclusion

Generally, the core elements of the SWTF are largely intact. However, much of the supporting ancillary equipment is in poor condition, has been removed, or has been substantially modified to operate the facility as a consecutive connection distribution system. Much of the piping within the water treatment facility has been severed or rerouted to accommodate other processes. Existing pumps, valves, mixers, and actuators will likely require rebuilds or replacement. Yard piping connecting the various storage tanks and treatment facilities has been abandoned, rerouted or repurposed. Piping abandoned in place may still be functional but will require video inspection and testing to determine if it may be used again.

Perhaps the most concerning issue with the existing system is the design and treatment capacity of the package treatment plant. The Trimite 75 was designed under older SWTF guidelines (prior to LT1ESWTR). At that time, the requirement for effluent turbidity was 0.5 NTU which is for the current rating of the Trimite 75. The current requirement for SWTF effluent turbidity is 0.3 NTU. This is not to say that the unit will not treat to this level. In fact, it is highly likely that by reducing flow rate slightly, by selecting modern coagulants, increasing coagulant dose, or increasing the frequency of backwashes, that this unit would meet modern treatment requirements should source water quality be similar to, or better than, the original design conditions. However, the real problem is accountability for performance. Typically, a treatment system is sold and guaranteed to perform at a certain level based on anticipated water quality parameters. If, after construction it appears that a treatment system is not meeting advertised treatment goals, the manufacturer will require an analysis of the actual water quality. Should the actual water quality differ substantially from the design criteria, the manufacturer of the equipment may be relieved of some liability related to system performance. In this instance, it is unlikely that anyone would officially rerate this unit to guarantee effluent turbidity of 0.3 NTU. Based on experience with similar situations, most government entities are uncomfortable with accepting equipment, or basing design on equipment, that does not carry a performance guarantee on some level.

As in the original design, the Engineer would expect to achieve required turbidity removal in the clarification/mixed media filtration steps. Any turbidity removal which occurs in subsequent treatment steps would be viewed as an unnecessary, but beneficial, situation. As discussed, following the clarifier/mixed media filters are two GAC columns that operate in series. These filters are designed to remove small amounts of chemical contaminants that may make it through the other treatment processes. The GAC filters are not "designed" to remove turbidity; however, they do remove turbidity.

The extent of turbidity removal accomplished is not defined in the GAC column design because that is not it's designed function; but, it is highly probable that the combined filtration provided by the mixed media filter and GAC columns would result in a treated effluent with turbidity below 0.3 NTU should the new source water have qualities similar to the original system design. Dibble would recommend engaging U.S. Filter and a contractor to provide water and power to test the units to determine the combined removal efficiency of the package treatment system and GAC filters.

Though not explicitly related to this section, it is apparent that source water capture, storage and pumping facilities would need to be designed and built as part of bringing the SWTF into service. There are many pretreatment elements that could be incorporated into the source water facilities which would greatly reduce the influent turbidity, and thus reduce the treatment load required of the package treatment plant. In fact, depending on the condition of the Presed Tank, it may be desirable to replace the uphill Presed Tank with other sedimentation and pretreatment facilities near the source water capture point. Should adequate pretreatment components be implemented, it is Dibble's belief that the existing package treatment plant in conjunction with the GAC filter columns would provide sufficient treatment to meet modern SWTF requirements.

To reiterate one finding from Section 5.2.1, bringing the GCN SWTF back online would require a Grade 4 operator. The Grade 4 operator may operate the facility remotely; however, a full time Grade 3 operator would be required locally.

Appendix A

Referenced Documents

APPENDIX A.1

Grand Canyon National Park Airport Water Supply, Treatment Facility and De-icing System, Operations & Maintenance Manual, March 1999

AERONAUTICS DIVISION

GRAND CANYON NATIONAL PARK AIRPORT
WATER SUPPLY, TREATMENT FACILITY
AND DEICING SYSTEM

PROJECT NO. AERO 95-01
TRACS NO. A5928/5100N205

OPERATIONS AND MAINTENANCE MANUAL

March 1999

DSWA **DAMON S. WILLIAMS ASSOCIATES, L.L.C.**
Consulting Civil and Environmental Engineers

And Associated Firms

ARIZONA DEPARTMENT OF TRANSPORTATION
AERONAUTICS DIVISION

GRAND CANYON NATIONAL PARK AIRPORT
WATER SUPPLY, TREATMENT FACILITY AND DEICING SYSTEM
PROJECT NO. AERO 95-01; TRACS NO. A5928/5100 N205

OPERATIONS AND MAINTENANCE MANUAL
March 1999

CONTENTS

1 INTRODUCTION 1-1
1.1 WATER SUPPLY AND TREATMENT FACILITY 1-1
1.2 WATER SUPPLY SYSTEM 1-1
1.3 WATER STORAGE FACILITIES 1-2
1.4 WATER DISTRIBUTION SYSTEM 1-2
1.5 WATER TREATMENT FACILITY 1-2
1.6 WASTE WATER COLLECTION SYSTEM 1-3
1.7 DESIGN CRITERIA 1-4
1.7.1 Water Supply 1-4
1.7.2 Water Treatment 1-4

2 DESCRIPTION OF WATER SUPPLY AND STORAGE FACILITIES 2-3
2.1 INTRODUCTION 2-3
2.2 RAW WATER SUPPLY 2-3
2.2.1 On-Site Catchment 2-3
2.2.2 Catchment Area Pump Station 2-3
2.3 RAW WATER STORAGE 2-3
2.3.1 Uphill Raw Water Storage Tanks 2-3
2.3.1.1 125 Kgal Uphill Storage Tank 2-4
2.3.1.2 1.4 Mgal Uphill Storage Tanks 2-6
2.3.2 Other Raw Water Storage Tanks 2-7
2.3.2.1 30 Kgal Raw Water Under Ground Storage Tank 2-7
2.3.2.2 Deicing and Backwash Flow Storage Sumps 2-8
2.4 POTABLE WATER STORAGE 2-8
2.4.1 375 Kgal Underground Storage Tank 2-8
2.5 BACKUP POTABLE WATER TRANSMISSION 2-10
2.6 REUSE WATER TRANSMISSION 2-11

3 DESCRIPTION OF TREATMENT FACILITY 3-1
3.1 ON-SITE CATCHMENT AREA - GOOD HOUSEKEEPING 3-1
3.2 PRETREATMENT 3-1
3.2.1 Oil/Water Separator 3-1

3.3 WATER TREATMENT FACILITY 3-3
3.3.1 Package Treatment System 3-4
3.3.1.1 Adsorption Clarifier 3-4
3.3.1.2 Mixed Media Filtration 3-5
3.3.1.3 Auxiliary Package Treatment System Equipment - Coagulant Feed System 3-5
3.3.1.4 Auxiliary Package Treatment System Equipment - Package Treatment System Influent Pump 3-8
3.3.1.5 Auxiliary Package Treatment System Equipment - Package Treatment System Effluent Pump 3-8
3.3.1.6 Auxiliary Package Treatment System Equipment - Backwash System 3-9
3.3.2 GAC Absorption Columns 3-11
3.4 DISINFECTION 3-12
3.5 CHEMICAL STORAGE AREAS 3-15
3.6 WATER QUALITY MONITORING 3-15
3.6.1 BTEX/PAH Monitoring System 3-15
3.6.2 Turbidity Meters 3-16
3.6.3 Chlorine Residual Analyzers 3-17
3.6.4 Analyzer Calibration 3-18

4. DESCRIPTION OF DISTRIBUTION SYSTEM 4-1

5 DETAILED OPERATION AND CONTROLS 5-1
5.1 INSTRUMENTATION AND CONTROL EQUIPMENT 5-1
5.1.1 Control Panel Descriptions and Locations 5-1
5.2 CATCHMENT AND CATCHMENT AREA PUMP STATION OPERATION 5-9
5.2.1 Normal Operation 5-9
5.2.2 Startup 5-9
5.2.3 Emergency Shut Down 5-9
5.2.4 Normal Shut Down 5-10
5.2.5 Shut-down Operation - Catchment Area Pump 5-11
5.3 UPHILL STORAGE TANKS OPERATION 5-11
5.3.1 Normal Operation 5-12
5.3.2 Start Up 5-12
5.3.3 Uphill Storage Tank Bypass and Shutdown 5-12
5.4 OIL/WATER SEPARATOR OPERATION 5-12
5.4.1 Normal Operation 5-13
5.4.2 Start Up 5-13
5.4.3 Normal Shut Down and Bypass Operation 5-13
5.4.4 Emergency Shut Down 5-13
5.5 30 KGAL REWATER STORAGE TANK OPERATION 5-14
5.5.1 Normal Operation 5-14
5.5.2 Start Up 5-15
5.5.3 Tank Shut Down 5-15
5.6 WATER TREATMENT FACILITY OPERATION 5-16
5.6.1 Package Treatment Plant Operation 5-16
5.6.1.1 Normal Operation (Automatic) 5-16
5.6.1.2 Alternate Operation (Manual) 5-17
5.6.1.3 Backwash Operation 5-17

5.6.1.4 Startup 5-17
5.6.1.5 Shutdown 5-18
5.6.2 GAC Column Operation 5-19
5.6.2.1 Normal Operation 5-19
5.6.2.2 Backwash Operation 5-19
5.6.2.3 Startup 5-19
5.6.2.4 Shut Down 5-19
5.7 DISINFECTION SYSTEM OPERATION 5-20
5.7.1 Normal Operation 5-20
5.7.2 Recirculation Pump Startup 5-20
5.7.3 Hypochlorite Feed Pump Startup 5-21
5.7.4 Recirculation Pump Shut Down 5-21
5.7.5 Hypochlorite Pump Shut Down 5-22
5.8 375 KGAL UNDERGROUND STORAGE TANK OPERATION 5-22
5.8.1 Normal Operation 5-22
5.8.2 Tank Compartment Start Up 5-23
5.8.3 Tank Compartment Shut Down 5-23
5.8.4 Off-site Potable Water Feed 5-25
5.8.4.1 Off-site Potable Water Feed Startup 5-25
5.8.4.2 Off-site Potable Water Feed Shutdown 5-25
5.8.5 Automatic Tank Inlet Feed Shutdown 5-25
5.9 MISCELLANEOUS SYSTEMS 5-26
5.9.1 Emergency Eyewash 5-26
5.9.2 Chemical Storage 5-26
5.9.3 Reuse Water Supply 5-26

6 LABORATORY CONTROLS 6-1
6.1 INTRODUCTION 6-1
6.2 SDWA REGULATIONS 6-1
6.3 SAMPLING AND ANALYSIS 6-5

7 RECORDS 7-1
7.1 INTRODUCTION 7-1
7.2 RECORDS TO BE SUBMITTED TO STATE AGENCIES 7-1
7.3 RECORDS TO BE KEPT ON FILE 7-2
7.3.1 Process Operation Records 7-2
7.3.2 Maintenance Records 7-2
7.3.3 Financial Records 7-2
7.3.4 Emergency Condition Records 7-2

8 MAINTENANCE 8-1
8.1 GENERAL 8-1
8.1.1 General Plant Maintenance 8-1
8.1.2 Scheduled Maintenance 8-2
8.1.3 Unscheduled Maintenance 8-2
8.1.4 Major Repairs 8-3
8.2 EQUIPMENT RECORD SYSTEM 8-3
8.3 STOREROOM AND INVENTORY RECORD 8-3

8.4 MAINTENANCE COSTS AND BUDGETS 8-3
8.5 EMERGENCY REPAIRS 8-5
8.6 MANUFACTURERS' OPERATION AND MAINTENANCE MANUALS 8-5
8.7 WARRANTY PROVISIONS 8-5
8.8 RECORD DRAWINGS 8-5
8.9 TROUBLESHOOTING 8-5
8.10 CHEMICAL PURCHASING 8-8
8.11 STORAGE AND DISPOSAL OF WASTE STREAMS 8-8

9 SAFETY 9-1
9.1 GENERAL 9-1
9.2 ELECTRICAL HAZARDS 9-1
9.2.1 Precautions 9-1
9.2.2 Work Procedures 9-2
9.2.3 First Aid for Electrical Shock 9-3
9.3 MECHANICAL HAZARDS 9-3
9.3.1 Housekeeping 9-4
9.3.2 Working with Mechanical Equipment 9-4
9.3.3 Guards 9-4
9.3.4 Railings and Safety Chains 9-4
9.3.5 Loud Noise 9-4
9.3.6 Tools 9-5
9.3.7 Lifting Equipment 9-6
9.4 CHEMICAL HAZARDS 9-7
9.4.1 Chemical Hazards 9-7
9.4.2 Sodium Hypochlorite 9-7
9.4.2.1 General 9-7
9.4.2.2 Storage and Handling 9-7
9.4.3 Aluminum Sulfate (Alum) 9-8
9.4.3.1 General 9-8
9.4.3.2 Storage and Handling 9-9
9.4.4 Polymer 9-9
9.4.4.1 General 9-9
9.4.4.2 Storage and Handling 9-9
9.4.5 Chemical Compatibility 9-10

10 UTILITIES 10-1
10.1 INTRODUCTION 10-1
10.2 POWER 10-1
10.3 TELEPHONE 10-1
10.4 BACKUP OFF-SITE POTABLE WATER SUPPLY 10-1
10.5 WASTEWATER COLLECTION 10-1
10.6 REUSE WATER 10-1

11 PERSONNEL 11-1

12 DEICING SYSTEM 12-1
12.1 INTRODUCTION 12-1

12.2 DESCRIPTION OF DEICING SYSTEM 12-1
12.2.1 Deicing Pad 12-2
12.2.2 Manholes 12-2
12.2.3 Deicing Sump 12-2
12.2.4 Pumps 12-3
12.3 DETAILED OPERATION AND CONTROLS 12-3
12.3.1 Normal Operation - No Deicing 12-3
12.3.2 Normal Deicing Operation 12-3
12.3.3 Maintenance and Repair of Deicing Pumps 12-3
12.3.4 Maintenance and Repair of Motorized Butterfly Valve 12-4
12.3.5 Emergency Fuel Spill 12-4

Appendices

PUMP CURVES
EQUIPMENT CUT SHEETS
ADEQ BULLETINS
REGULATORY
MANUFACTURERS' SAFETY DATA SHEETS (MSDS)

Tables

Page

Table 1-1. Annual Water Demand (gallons) 1-4
Table 1-2. Raw Water Quality Data 1-5
Table 2-1. Catchment Lining 2-1
Table 2-2. Catchment Area Pump Station 2-2
Table 2-3. 125 Kgal Uphill Storage Tank Design Details 2-3
Table 2-4. Vacuum Breaker Valve on Outlet of 125 Kgal Uphill Storage Tank 2-4
Table 2-5. 1.4 Mgal Uphill Storage Tanks 2-5
Table 2-6. 30 Kgal Underground Storage Tank 2-6
Table 2-7. 375 Kgal Underground Storage Tank 2-7
Table 2-8. Backup Potable Water Transmission Piping and Equipment 2-8
Table 3-1. Oil Water Separator 3-2
Table 3-2. Oil Water Separator Inlet Flow Control Valve 3-2
Table 3-3. Oil Water Separator Sludge Pump 3-3
Table 3-4. Package Treatment System General Information 3-4
Table 3-5. Adsorption Clarifier Information 3-5
Table 3-6. Mixed Media Filter Design Information 3-5
Table 3-7. In-Line Static Mixer 3-6
Table 3-8. Alum Storage Tanks And Mixer 3-6
Table 3-9. Chemical Feed Pump for Alum 3-7
Table 3-10. Polymer Storage Tank And Mixer 3-7
Table 3-11. Chemical Feed Pump for Polymer Addition 3-8
Table 3-12. Package Treatment System Influent Pump 3-8
Table 3-13. Package Treatment System Effluent Pump 3-9
Table 3-14. General Backwash System Design Information 3-9
Table 3-15. Backwash Pressure/Flow Control 3-10
Table 3-16. Backwash Backflow Preventer 3-10
Table 3-17. Package Plant Backwash Blower 3-11
Table 3-18. GAC Column Design Information 3-11
Table 3-19. 375 Kgal Underground Storage Tank Recirculation Pump (Typical of 2) 3-13
Table 3-20. Disinfection Design Parameters 3-13
Table 3-21. Sodium Hypochlorite Storage Tanks And Mixer 3-14
Table 3-22. Chemical Feed Pumps for Sodium Hypochlorite Addition 3-14
Table 3-23. BTEX/PAH Analyzer Information 3-15
Table 3-24. Turbidity Meter Design Information 3-16
Table 3-25. Chlorine Analyzer Design Information 3-17
Table 4-1. Domestic Service Pumps (Pump A and Pump B) Design Characteristics 4-2
Table 4-2. Fire Service Pumps (Pump C and Pump D) Design Characteristics 4-2
Table 5-1. Control Panel locations 5-2
Table 5-2. Circuit Breaker Panel Locations 5-3
Table 5-3. Equipment Control Panel List and Associated Alarms/Controls 5-3
Table 5-4. Tank Levels and Available Water with Both Compartments Operational 5-23
Table 5-5. Tank Levels and Available Water with One Compartment Out of Service 5-24
Table 6-1. Laboratory Sampling and Analyses Schedule 6-1
Table 8.1. Sample Equipment Record 8-4
Table 8-2. Troubleshooting List 8-6
Table 12-1. Deicing System Collection, Storage and Handling 12-1

Figures

		Follows Page
Figure 1-1.	Site Plan and Vicinity Map	1-1
Figure 1-2.	Collection and Treatment System Layout	1-2
Figure 2-1.	Catchment Area Plan, Section and Details	2-1
Figure 2-2.	Catchment Area Pump Station	2-1
Figure 2-3.	Uphill Storage Tanks Yard Piping Plan	2-2
Figure 2-4.	125 Kgal Tank Inlet and Outlet Details	2-4
Figure 2-5.	Uphill Storage Tank Inlet/Outlet and Overflow/Drain Details	2-4
Figure 2-6.	Plan and Section of Valve Controls	2-5
Figure 2-7.	30 Kgal Underground Storage Tank Section	2-5
Figure 2-8.	Plan and Sections for 375 Kgal Storage Tank	2-7
Figure 2-9.	Off Site Potable Water Connection Point	2-8
Figure 2-10.	Off-site Potable Water and Reuse Meter Details	2-8
Figure 2-11.	Backup Potable Water Connection to 375 Kgal Underground Storage Tank	2-8
Figure 2-12.	Future Connection Point for Airport Reuse Water System to SGCSD Distribution System	2-8
Figure 3-1.	Oil/Water Separator Details	3-1
Figure 3-2.	Oil/Water Separator Flow Control Valve	3-1
Figure 3-3.	Water Treatment Facility and Distribution System Pump Station Plan	3-4
Figure 3-4.	Water Treatment Facility Room Plan	3-4
Figure 3-5.	Water Treatment Facility Schematic	3-4
Figure 3-6.	Package Plan Influent Pump and Chemical Feed Point Sections	3-6
Figure 3-7.	Coagulant Chemical Feed System	3-6
Figure 3-8.	Backwash System Piping	3-9
Figure 3-9.	GAC Column Sections	3-11
Figure 3-10.	375 Kgal Underground Storage Tank Recirculation Pumps and Hypochlorite Feed	3-12
Figure 3-11.	BTEX Analyzer Details	3-15
Figure 5-1.	Catchment Basin and Uphill Storage Tanks P&ID	5-1
Figure 5-2.	Treatment System P&ID	5-1
Figure 5-3.	Catchment Area Pump Station Control Panels	5-1
Figure 5-4.	Uphill Storage Tanks Control	5-1
Figure 5-5.	Water Treatment System Control and Circuit Breaker Panel Locations	5-1
Figure 5-6.	Deicing System-Collection Storage and Disposal Control Panel Location	5-1
Figure 5-7.	Deicing System-Collection Storage and Disposal Panel DP Location	5-1
Figure 12-1.	Deicing System Plan	12-1
Figure 12-2.	Deicing System-Collection, Storage and Disposal Detailed Plan and Section	12-1

1 INTRODUCTION

1.1 WATER SUPPLY AND TREATMENT FACILITY

The Grand Canyon National Park Airport is located just south of the community of Tusayan, Arizona, and about six miles south of the Grand Canyon National Park at an elevation of 6,600 feet above Mean Sea Level (MSL). The Airport is surrounded by the Kaibab National Forest on the south, east and west, and by private land in the community of Tusayan on the north. State Highway 64 (SR 64) provides access from the east side. Originally constructed in 1967 by the State of Arizona, the Airport is operated and administered today by the Aeronautics Division of the Arizona Department of Transportation (ADOT).

The Airport sits on approximately 858 acres. It includes a full range of facilities that allow it to serve over 1.2 million passengers each year. In addition, three heliports have recently relocated to the Airport. Papillon Helicopters heliport is located north of the terminal area and south of the north access road. It consists of a 15,000 square feet (sf) terminal building, a 13,600 sf hangar, ten helipads, and a 73 car and 11 bus parking lot. Air Star Helicopters heliport, located adjacent to the south entrance to the Airport, consists of a terminal building, a 28 vehicle parking lot and two helipads. Kenai Helicopters heliport, located northwest of the Air Star heliport, consists of 4 helipads, 2 acres of parking and a terminal building.

A unique feature of the Airport is its user profile. It is the third busiest air carrier airport in the State, but almost all of its traffic occurs during daytime hours bringing tourists to visit the Grand Canyon National Park. The majority of the flights to and from the Airport are either scheduled airline flights off-loading or picking up tourists, or they are air tour operations taking tourists for air site-seeing trips. The air tours consist of both fixed wing and helicopters.

1.2 WATER SUPPLY SYSTEM

Current water sources serving the Airport are storm water runoff collected from the catchment area and the back-up potable water supply. The catchment area is located between the runway and the taxiway, as shown in Figure 1-1 Site Plan and Vicinity Map. It is protected from runoff generated by the adjacent area by a perimeter berm. The berm prevents runoff that could be potentially contaminated from polluting the catchment area. The catchment basin is divided into two compartments which are connected by a length of piping. The compartments are lined with hypalon and discharge to a wet well. Water collected in the wet well is pumped to a 125 thousand gallon (Kgal) above grade steel raw water storage tank or two 1.4 million gallon (Mgal) steel raw water tanks located on the hill side, adjacent to the housing area.

As a supplement to the runoff water during the dry season, a back-up potable water transmission pipe feeds into the 375K Gallon treated water underground storage tank. The back-up potable water is purchased from Hydro Resources, a private utility that supplies potable water to majority of residents and businesses in Tusayan, Arizona.

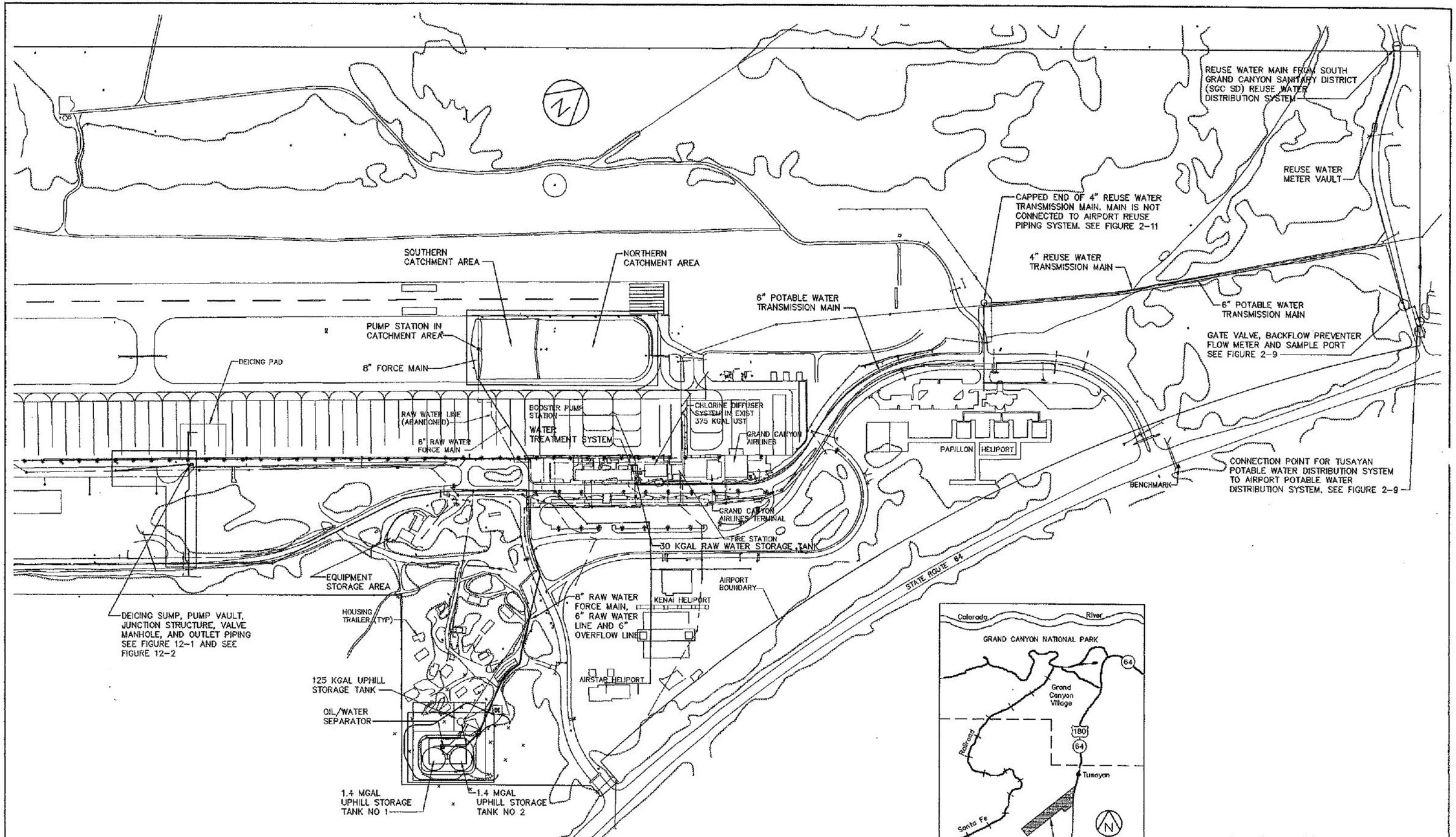

SITE PLAN

0 100 200 400

SCALE IN FEET

VICINITY MAP

0 1 2 4

SCALE IN MILES

Grand Canyon National Park Airport
Water Supply, Treatment Facility and Deicing System
Operations and Maintenance Manual

SITE PLAN AND VICINITY MAP

FIGURE NO. 1-1

U:\CADD\9706\OandM\97060M01.dwg 03/08/99 3:10 pm

1.3 WATER STORAGE FACILITIES

The storage facilities at the Airport can be lumped under two categories: raw water storage and treated (potable and fire) water storage facilities. The raw water storage reservoirs consists of a 125 Kgal and two 1.4 Mgal storage tanks located uphill from the terminal/runway area, near the employee housing area and a 30 Kgal downhill storage tank located in the terminal building directly below the water treatment room. Runoff water, intercepted in the catchment area, is pumped to the raw water reservoirs which feeds the water treatment system. Treated water is stored in the potable water reservoir which is a 375 Kgal underground storage tank located to the north of the terminal. A fire/domestic water pump station draws water from the reservoir and feeds the distribution system.

1.4 WATER DISTRIBUTION SYSTEM

The distribution system serves the employee housing area and Airport facilities including terminal, maintenance buildings, offices, fire station, and control tower. The distribution line is a combined domestic/fire flow system consisting of an 8-inch ductile iron pipe (DIP) main that conveys water to the above facilities, as well as to the fire hydrants.

1.5 WATER TREATMENT FACILITY

Under the normal operation, raw water from the catchment basin is pumped to the 125 Kgal Uphill storage tank which also serves as a roughing sedimentation basin. The raw water then flows from the 125 Kgal storage tank into the 1.4 Mgal storage tanks. Raw water from the 1.4 Mgal tanks flows by gravity either directly into the 30 Kgal raw water storage tank or flows through the oil/water separator. The raw water stored in the 30 Kgal storage tank is pumped into the water treatment system. A BTEX/Hydrocarbon analyzer is located on the inlet of the 125 Kgal uphill storage tank. The analyzer will alarm in the event high hydrocarbon concentrations are detected in the raw water and raw water flow to the treatment system is halted until the source is determined and the contamination is removed.

The water treatment system consists the following unit processes, starting at the inlet of the facility and moving to the outlet:

- coagulation and static mixing
- contact clarification
- multi media filtration
- granular activated carbon adsorption
- disinfection.

The water treatment system also includes an influent pump, effluent pump, backwash flow control system, an air blower and reservoir recirculation pumps. A schematic of the collection and treatment system layout is provided in Figure 1-2.

Figure 1-2. Collection and Treatment System Layout

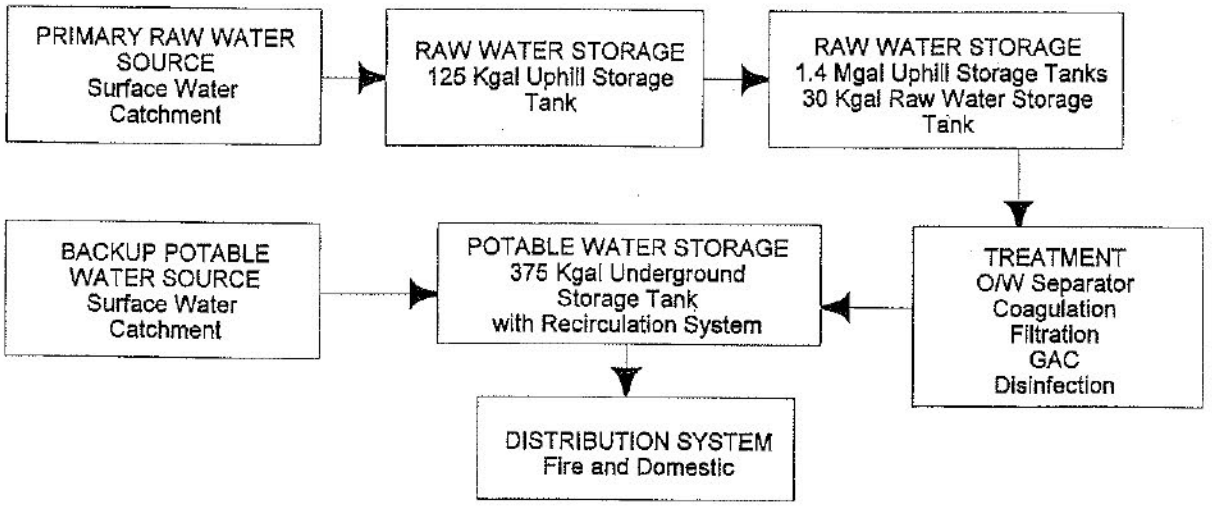

Coagulant alum and filter aid polymer are fed via metering pumps into the water treatment facility inlet raw water pipe. Using an in-line static mixer, added chemicals are mixed rapidly with raw water before entering a contact clarifier. The clarifier serves to remove a significant portion of the solids. Clarified water is then fed to a multi-media filter unit to provide additional turbidity removal. The multi media, rapid rate filter, with automatic backwash, provides filtered water with turbidity of less than 0.5 NTU. Granular activated carbon (GAC) adsorption follows the multi media filtration. The GAC columns remove trace amounts of organic material and trihalomethane precursors that remain in the clarified and filtered water. The two GAC columns are normally operated in series. Sodium hypochlorite is added to the GAC treated water for disinfection and then stored in 375 Kgal underground storage tank. The finished water in the 375 Kgal tank is continually circulated with recirculation pumps. Sodium hypochlorite is also added to the discharge end of the recirculation pumps to disinfect the recirculating finished water. Disinfected water is redistributed into the 375 Kgal tank by a submerged diffuser.

1.6 WASTE WATER COLLECTION SYSTEM

The wastewater system uses a central collection and treatment system. Wastewater is collected in lateral sewers and conveyed to an 8-inch polyvinyl chloride (PVC) sewer main which is routed to an offsite wastewater treatment facility owned by the South Grand Canyon Sanitary District (SGCSD) and operated by Citizens Utilities. The collection system also receives deicing flow as described in Section 12 of this document.

The storm drain system consists of one 54-inch main trunk, which has several smaller branches connecting to it. The main trunk begins at a manhole 135 feet southeast of the fire station where it carries the excess storm water southwest past the south side of all the Airport facilities and down along the southeast side of the runway and taxiway. The 54-inch line ends south of the apron area,

where it discharges the flow into an open ditch. This open ditch conveys the water to an impoundment at the southwest end of the Airport called the Rain Tank.

1.7 DESIGN CRITERIA

The design criteria for the Grand Canyon Airport water supply and treatment facility upgrade are based on the Recommended Alternative Implementation Schedule as defined in the Final Report of the Water Supply and Treatment Study conducted by DSWA and associated firms (May 1996).

1.7.1 Water Supply

The water supply and storage facilities are designed to meet the water demands for airport users, housing units, control tower, fire stations and restaurants. The total estimated demand for years 2010, 2015 and 2045 are summarized in Table 1-1.

Table 1-1. Annual Water Demand (gallons)

Year	2010	2015	Ultimate(2045)
Total	10,900,000	11,700,000	19,400,000

The fire storage requirements are estimated at 90,000 gallons. Year 2045 peak domestic demand is estimated at 120,000 gallons per day based on peaking factor of 2.25. The fire and domestic demand will be stored in the 375 Kgal finished water underground storage tank located between the terminal and the fire station.

1.7.2 Water Treatment

The airport water system is classified as a "Small Water System" and is designed to meet current and foreseeable future water regulations. To provide adequate water treatment, the treatment train includes spill control measures at the catchment area, an oil/water separator, pre-sedimentation, coagulation and rapid mix, filtration, granular activated carbon and disinfection.

The water supply and treatment system is designed to meet the United States Environmental Protection Agency (USEPA) Safe Drinking Water Act (SDWA), SDWA Rules and the Arizona state statutes in the Safe Drinking Water Regulations (Arizona Administrative Code, Title 18, Chapter 4, Safe Drinking Water). The SDWA Rules currently in effect are:

Total Coliform Rule (TCR)
Lead and Copper Rule (LCR)
Surface Water Treatment Rule (SWTR - NOTE: Volatile Organic Compounds (VOCs) and Synthetic Organic Compounds (SOCs) are regulated under this Rule)
Fluoride Rule
Standard Monitoring Framework (SMF)

Under the SMF, inorganic chemicals, Volatile Organic Compounds (VOCs) and Synthetic Organic Compounds (SOCs) are regulated. The water supply and treatment system is also designed to meet the SDWA "Rules" that are proposed or that may take effect in the foreseeable future and/or the planning horizon of the airport water system including:

Groundwater Disinfection Rule (GDR)
Enhanced Surface Water Treatment Rule (ESWTR)
Disinfectant/Disinfection Byproduct Rule (D/DBP)
Radio nuclides (Additional Limitations)
Sulfate Rule
Arsenic Rule

The water treatment system meets the USEPA, SDWA and the Arizona state safe drinking water regulations based on influent raw water quality data as shown in Table 1-2:

Table 1-2. Raw Water Quality Data

Parameter	Average	Maximum
Influent Flow Rate (gpm):	85	85
Influent Turbidity (NTU):	1.9	148
Total Alkalinity (mg/L as $CaCO_3$):	7	131
Total Hardness (mg/L as $CaCO_3$):	2	144
pH (standard units):	7	8
Specific Conductivity ($\mu mhos/cm^2$):	57	Not Available
Total Dissolved Solids (mg/L):	22	185
Calcium (mg/L):	0.7	38
Lead (mg/L):	<0.005	0.022
Magnesium (mg/L):	0.1	12
Manganese (mg/L):	0.01	2.1
Iron (mg/L):	0.09	8.8
Sulfate (mg/L):	< 0.08	59

2 DESCRIPTION OF WATER SUPPLY AND STORAGE FACILITIES

2.1 INTRODUCTION

This Section describes the water supply and storage facilities at the Grand Canyon National Park Airport. The water supply consists of a catchment area to collect storm precipitation and a backup potable water transmission line from Tusayan, Arizona. The water storage facilities consist of raw water storage tanks and potable water storage tanks.

2.2 RAW WATER SUPPLY

The raw water supply consists of storm precipitation caught in the catchment area. The catchment area is equipped with a pump station as described below.

2.2.1 On-Site Catchment

The catchment area is located between the runway and the taxiway as shown in Figure 1-1. The total area of the catchment is about 5 acres (212,000 sq ft). The catchment area is divided into two compartments, northern compartment and southern compartment as shown in Figure 2-1 Catchment Area Plan, Section and Details. The northern compartment is approximately 500 ft x 265 ft (or 132,500 sq ft) and the southern compartment is approximately 300 ft x 265 ft (or 79,500 sq ft). Each compartment has berms on all four sides sloped at 10:1. The lining consists of 10,000 sq. ft sheets of hypalon seamed together. Air/gas vents are located every 25 ft along the perimeter of catchment basins. Additional design details for the lining system are listed in Table 2-1.

Table 2-1. Catchment Lining

Parameter	Description
Manufacturer:	Burke Environmental Products (South Compartment)
Material:	Hypalon
Thickness:	45 mils
Seam:	Hypalon Adhesive (Xylene) and Hot Air Blower Type Heat Guns
Anchoring:	Soil Trenches

The precipitation collected in the northern compartment flows into the southern compartment through the connecting pipe. The precipitation collected in the southern compartment flows into a wet well referred to as a catch basin, that serves the catchment area pump station.

2.2.2 Catchment Area Pump Station

The pump station consists of a single pump that draws water from the catch basins through a 6-inch pipe and pumps it to the uphill storage tanks. A detailed drawing of the pump station is provided in Figure 2-2 Catchment Area Pump Station. The pump station consists of the following equipment listed in Table 2-2:

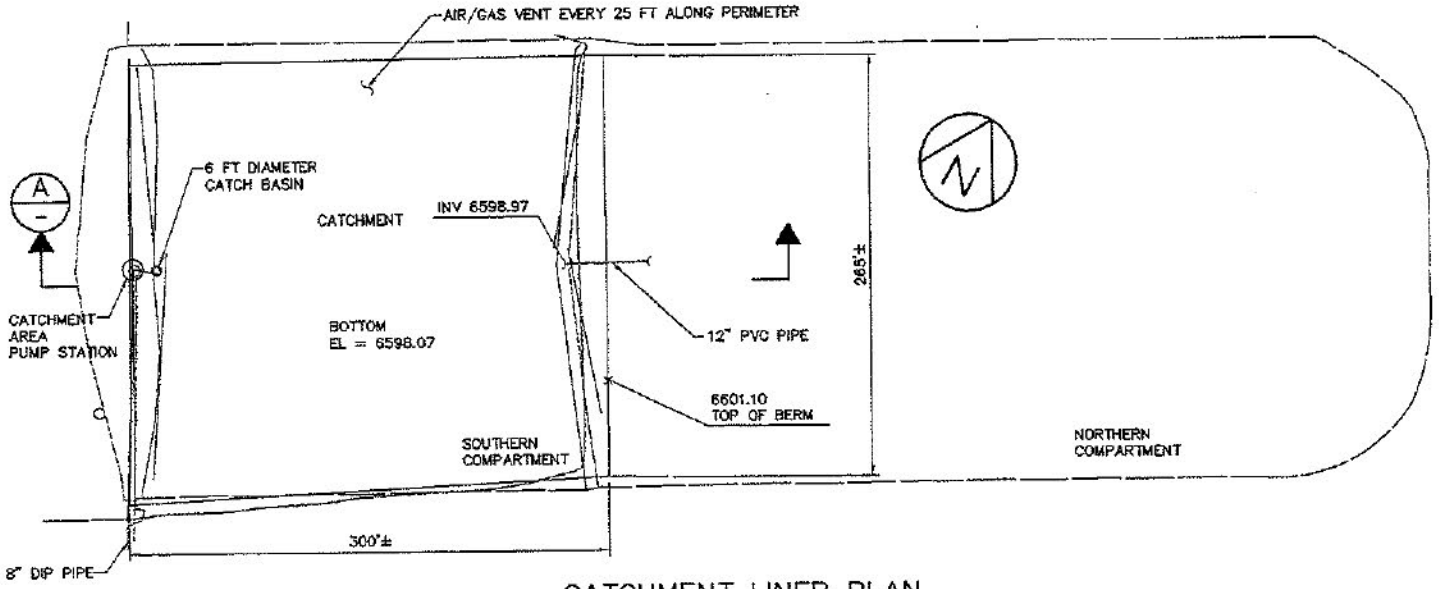

CATCHMENT LINER PLAN

NOT TO SCALE

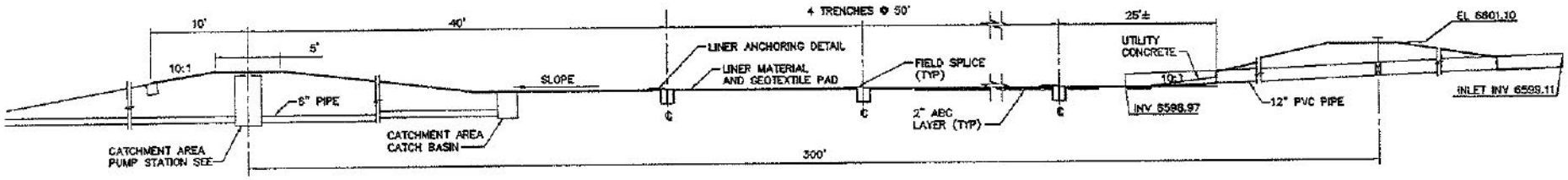

A

CATCHMENT LINER SECTION

NOT TO SCALE

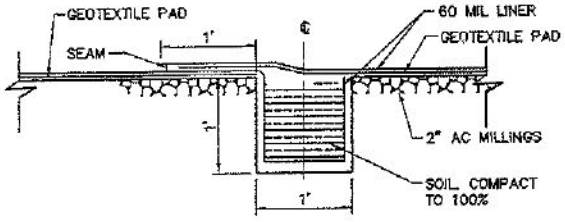

CATCHMENT LINER ANCHORING TRENCH DETAIL

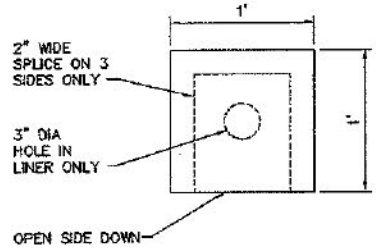

AIR/GAS VENT

Grand Canyon National Park Airport
Water Supply, Treatment Facility and Deicing System
Operations and Maintenance Manual

CATCHMENT AREA PLAN, SECTION AND DETAILS

Figure No. 2-1

U:\CADD\9706\OandM\97060M03.dwg 03/08/99 1:50 pm

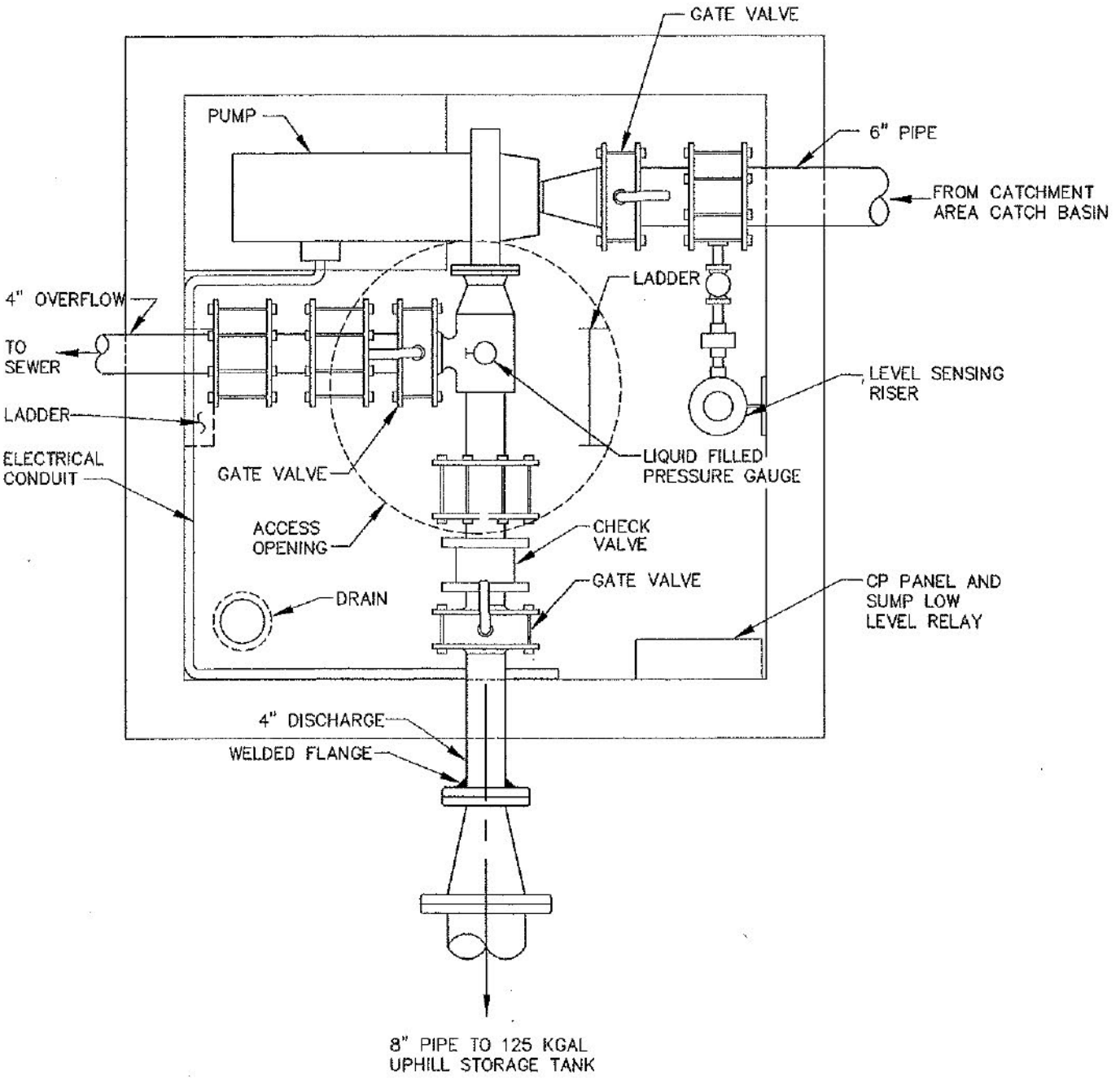

Grand Canyon National Park Airport
Water Supply, Treatment Facility and Deicing System
Operations and Maintenance Manual

CATCHMENT AREA PUMP STATION

Figure No. 2-2

U:\CADD\9706\OandM\97060M04.dwg 03/08/99 1:33 pm

Table 2-2. Catchment Area Pump Station

Parameter	Description
Check Valve:	4-inch
Catchment Area Pump: **Type:**	 Dry Pit Centrifugal
Manufacturer:	Crane Deming
Model:	4360-4200
RPM:	3500
Power:	20 HP
Electrical:	480 V, 3-Phase
Gate Valves: **Suction** **Discharge** **Overflow**	 6 inch 4 inch 4 inch

The water collected in the catch basin is pumped to the 125 Kgal uphill storage tank. The pump can be controlled by automatic or manual operation. Under automatic mode, the pump operation is controlled by a low level sensor in the catch basin and the liquid level in the uphill storage tanks. An overflow line allows the bypass of the uphill storage tanks.

2.3 RAW WATER STORAGE

Raw water collected in the catchment area is pumped to the uphill storage facilities consisting of above ground steel tanks and a below ground concrete storage tank located adjacent to the water treatment facility.

2.3.1 Uphill Raw Water Storage Tanks

Three above ground steel tanks are used to store raw water collected from the catchment area. A 125 Kgal uphill storage tank and two 1.4 Mgal steel tanks (Uphill Storage Tanks No. 1 and No.2) are located on a hill adjacent to an Airport housing area as shown in Figure 1-1. A yard piping plan for the three above ground storage tanks is provided in Figure 2-3 Uphill Storage Tanks Yard Piping Plan. The overflow and drains lines from all three tanks merge into a common 6-inch storm drain which flows downhill into the main storm drain. The three storage tanks have an access road and are located at a safe distance from the runaway. All tanks have one 24-inch x 24-inch square man way at the top which can be accessed by caged ladder. Also, each of the tanks has a 24-inch diameter man way at ground level. The coating systems used for the all three tanks is provided in the following tables.

VALVE VAULT NO 5

VALVE VAULT NO 8

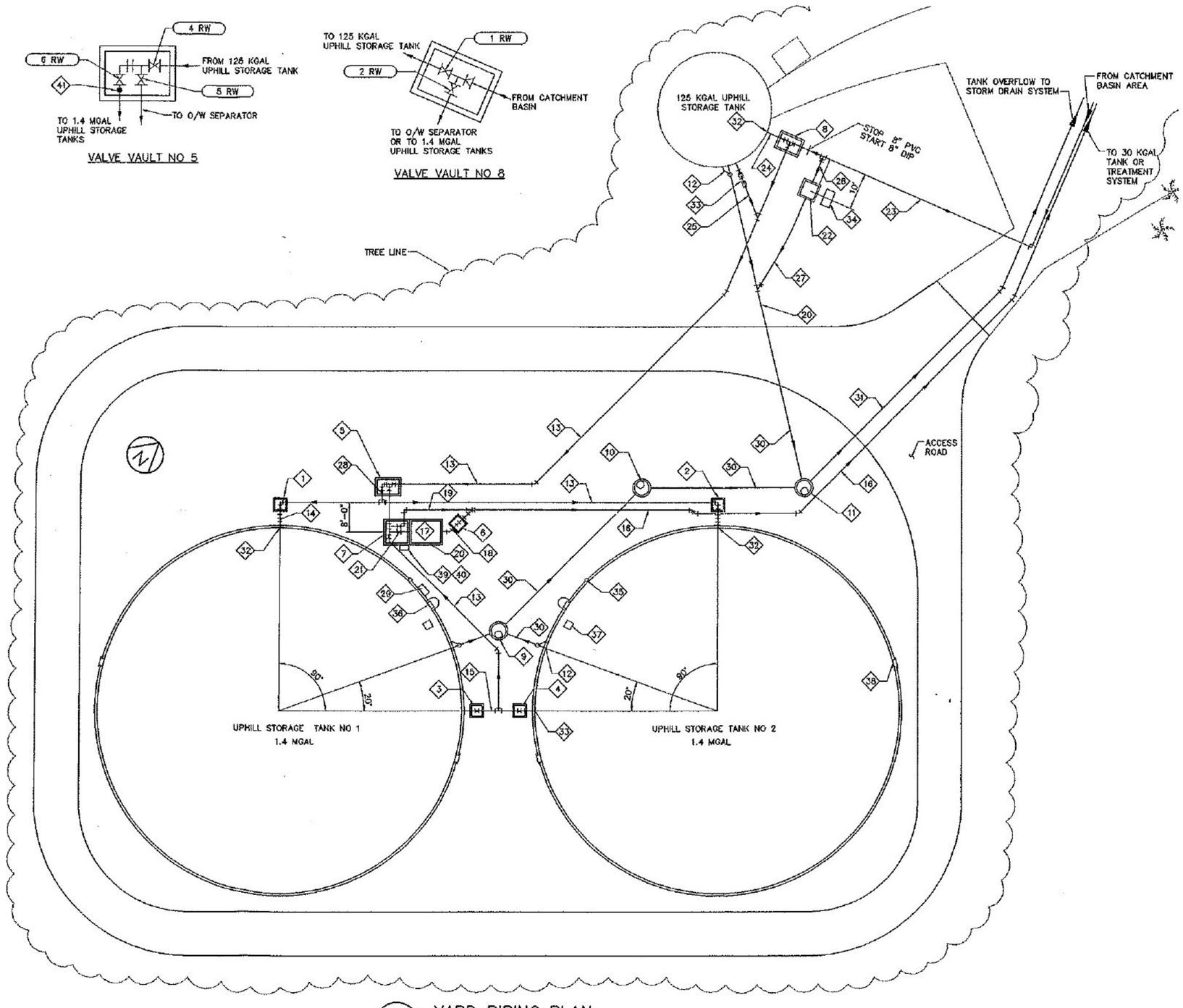

A YARD PIPING PLAN

0 15 30 60

SCALE IN FEET

KEY NOTES

1. VALVE VAULT NO 1, VALVE (11 RW)
2. VALVE VAULT NO 2, VALVE (12 RW)
3. VALVE VAULT NO 3, VALVE (9 RW)
4. VALVE VAULT NO 4, VALVE (10 RW)
5. VALVE VAULT NO 5, VALVES (4 RW), (5 RW), (6 RW)
6. VALVE VAULT NO 6, VALVE (13 RW)
7. VALVE VAULT NO 7, VALVES (7 RW), (8 RW)
8. VALVE VAULT NO 8, VALVES (1 RW), (2 RW)
9. STORM DRAIN CATCH BASIN NO 1
10. STORM DRAIN CATCH BASIN NO 2
11. STORM DRAIN CATCH BASIN NO 3
12. TANK OVERFLOW/DRAIN (TYP OF 3)
13. 4" RAW WATER
14. 4" RAW WATER INLET LINE
15. 4" RAW WATER OUTLET LINE
16. 6" RAW WATER PIPE
17. OIL/WATER SEPARATOR
18. 4" OIL/WATER SEPARATOR EFFLUENT PIPE
19. 4" OIL/WATER SEPARATOR BYPASS PIPE
20. OIL/WATER SEPARATOR EQUIPMENT BASE
21. OIL/WATER SEPARATOR INLET VALVES AND CONTROLS
22. BTEX/PAH MONITORING SYSTEM
23. 8" RAW WATER FORCE MAIN
24. 4" TANK INLET PIPE
25. 4" TANK OUTLET PIPE
26. 1/2" SAMPLE PIPE
27. 2" DRAIN PIPE
28. TANK LEVEL TRANSMITTER
29. UPHILL STORAGE TANK RTU AND ANTENNA
30. 4" OVERFLOW PIPE
31. 6" OVERFLOW LINE TO STORM DRAIN
32. TANK INLET (TYP OF 3)
33. TANK OUTLET (TYP OF 2)
34. PANEL UHST
35. WATER LEVEL INDICATOR (TYP OF 2)
36. LADDER WITH SAFETY CAGE (TYP OF 2)
37. ROOF HATCH (TYP OF 2)
38. ACCESS MANWAY (TYP OF 4)
39. O/W SEPARATOR SOLENOID VALVE LOCAL CONTROL PANEL
40. O/W SEPARATOR SLUDGE PUMP LOCAL CONTROL PANEL
41. UPHILL STORAGE TANKS LEVEL SENSOR

Grand Canyon National Park Airport
Water Supply, Treatment Facility and Deicing System
Operations and Maintenance Manual

UPHILL STORAGE TANKS
YARD PIPING PLAN

Figure No. 2-3

U:\CADD\9706\OandM\9706OM02.dwg 03/08/99 3:12 pm

2.3.1.1 125 Kgal Uphill Storage Tank

Raw water collected in the catchment area is pumped through an 8-inch raw water pipe to the 125 Kgal uphill storage tank. A ½-inch sample pipe draws a continuous raw water sample from the 8-inch catchment pipe just before the pipe reduces to 4-inch diameter and connects to the 125 Kgal uphill storage tank. The continuous raw water sample is analyzed by a Benzene, Toluene, and Xylene/Polyaromatic Hydrocarbons (BTEX/PAH) continuous monitoring system. This analyzer is described in further detail in Section 3.5. The 125 Kgal uphill storage tank serves as a roughing sedimentation tank to intercept the large solids and floatables in the raw water before it is transferred to the 1.4 Mgal uphill storage tanks. Design information on the 125 Kgal uphill storage tank is summarized as follows:

Table 2-3. 125 Kgal Uphill Storage Tank Design Details

Parameter	Value
Material of Construction:	Welded Steel
Capacity:	125 Kgal
Diameter:	30 ft
Height:	24 ft
Vents:	6 inches
Inlet, Outlet, Overflow, and Drain Pipe Size:	4 inch DIP
Elevation (ft): **Tank Top:** **Tank Floor:** **Outlet Pipe Invert Elevation:** **Drain Pipe Riser Elevation:** **Influent Pipe Invert Elevation:** **Overflow Pipe Invert:**	 6698.50 6674.50 6677.33 6675.25 6677.33 6698.17
Internal Wall Coatings:	Surface Preparation - SSPC-SP5 White Metal Abrasive Blast Cleaning Prime Coat - Tnemec Series FC20-WHO2 (tank white) Pota-Pox, 1 Coat, 4-6 mils dry film thickness (DFT) Intermediate Coat - Tnemec Series 20-1255 (beige) Pota-Pox Plus, 1 Coat, 4-6 mils DFT Finish Coat - Tnemec Series 140-1255 (tank white) Pota-Pox, 1 Coat, 4-6 mils DFT
External Wall Coatings 125 Kgal Tank:	Surface Preparation - High Pressure Water Blast Cleaning (3000 psi) to remove chalk and other contaminants Prime Coat - Tnemec Series 30 (balsam) Spra-Saf EN, 1 coat, 3 mils DFT Finish Coat - Tnemec Series 30 (balsam) Spra-Saf EN, 2 coat, 3 mils DFT per coat

A riser loop is installed on the pipe connecting the 125 Kgal uphill storage tank to the 1.4 Mgal uphill storage tanks. Detailed drawings of the 125 Kgal uphill storage tank inlet and outlet are shown in Figure 2-4 125 Kgal Tank Inlet and Outlet Details. The purpose of the loop is to prevent contaminated raw water in the 125 Kgal uphill storage tank from flowing to the 1.4 Mgal uphill storage tanks. A vacuum breaker valve has been placed at the high point of the loop to prevent siphoning from the 125 Kgal uphill storage tank. The loop and valve have been designed to prevent the top 2 ft layer and the bottom 1 ft layer in the 125 Kgal uphill storage tank from flowing into the 1.4 Mgal uphill storage tanks if the isolation valves to the these tanks are not closed during a BTEX analyzer alarm. The characteristics of the vacuum breaker valve are as follows:

Table 2-4. Vacuum Breaker Valve on Outlet of 125 Kgal Uphill Storage Tank

Inlet Flow Control Valve Type:	Combination Air Release and Vacuum Relief Valve
Manufacturer:	Val Matic
Model:	102
Equipment Tag Number:	25 RW
Float Material :	Stainless Steel
Valve Body Material :	Cast Iron
Seat Material :	Buna N
Inlet and Outlet Sizes (inches) :	2; NPT
Max. Valve Pressure (psi) :	150
Air Flow Capacity @ 5 psi (cfs):	13.5

2.3.1.2 1.4 Mgal Uphill Storage Tanks

The 1.4 Mgal and 125 Kgal uphill storage tanks are interconnected by buried pipes so that all three tanks will have the same water level under equilibrium conditions. The 1.4 Mgal uphill storage tank discharges are routed through a 4-inch pipe to the oil water separator. The 6-inch effluent pipe from the oil/water separator expands to an 8-inch pipe which conveys gravity flow from the 1.4 Mgal uphill storage tank area either into the 30 Kgal raw underground storage tank (underneath the water treatment facility) or directly to the water treatment facility. Inlet and outlet details for the 1.4 Mgal uphill storage tanks are shown in Figure 2-5 Uphill Storage Tank Inlet/Outlet and Overflow/Drain Details. Design information for the 1.4 Mgal uphill storage tanks are provided in Table 2-5.

2.3.2 Other Raw Water Storage Tanks

There are three additional underground tanks that store raw water.

Two underground tanks are associated with the water treatment system. A 30 Kgal storage tank is used to store raw water received from the uphill storage tanks. The raw water stored in this tank is then pumped to the water treatment facility. Backwash flows discharged from the water treatment facility are collected in a below ground 2,500 gallon sump.

Deicing flows are captured from the deicing pad and are stored in a 2,500 gallon underground sump.

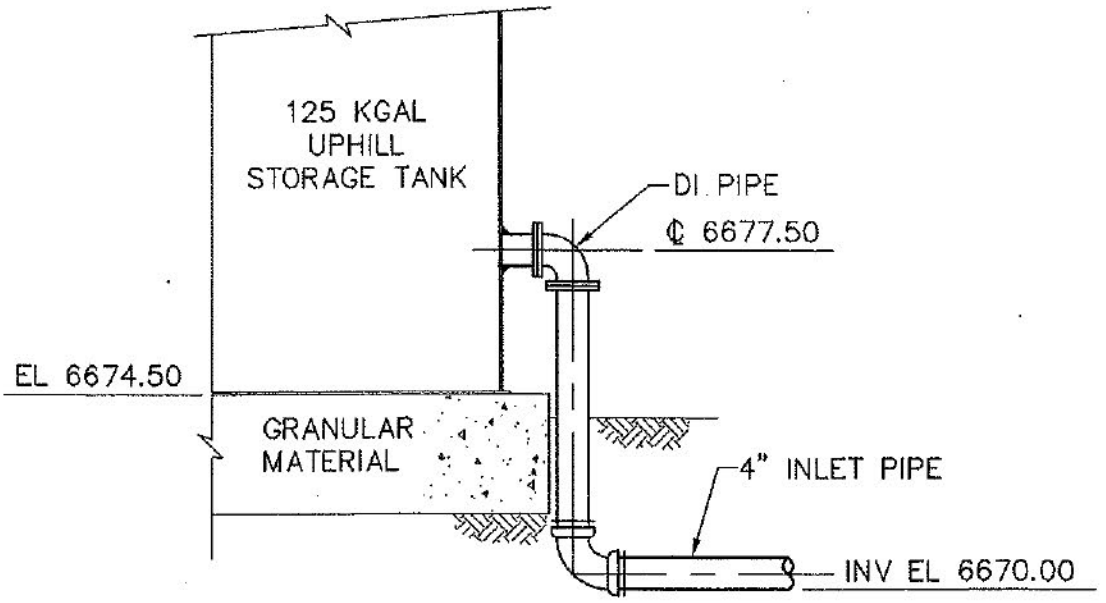

TANK INLET

NOT TO SCALE

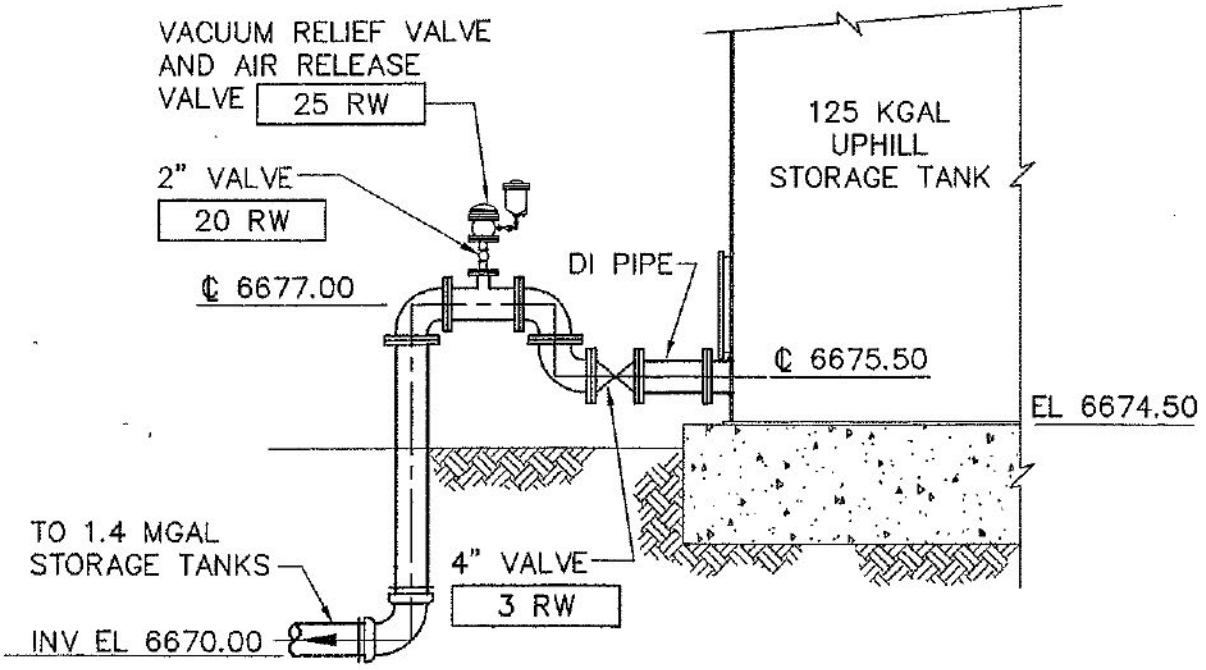

TANK OUTLET

NOT TO SCALE

Grand Canyon National Park Airport
Water Supply, Treatment Facility and Deicing System
Operations and Maintenance Manual

125 KGAL TANK
INLET AND OUTLET DETAILS

Figure No. 2-4

U:\CADD\9706\OandM\9706OM05.dwg 03/08/99 11:56 am

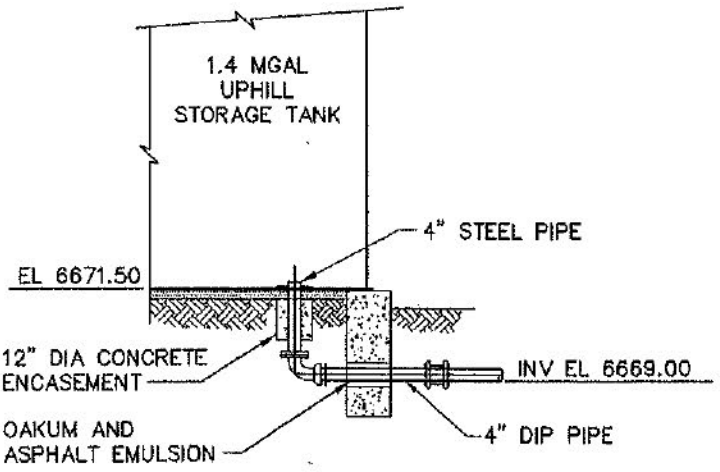

1.4 MGAL UPHILL STORAGE TANK INLET AND OUTLET DETAIL

NOT TO SCALE

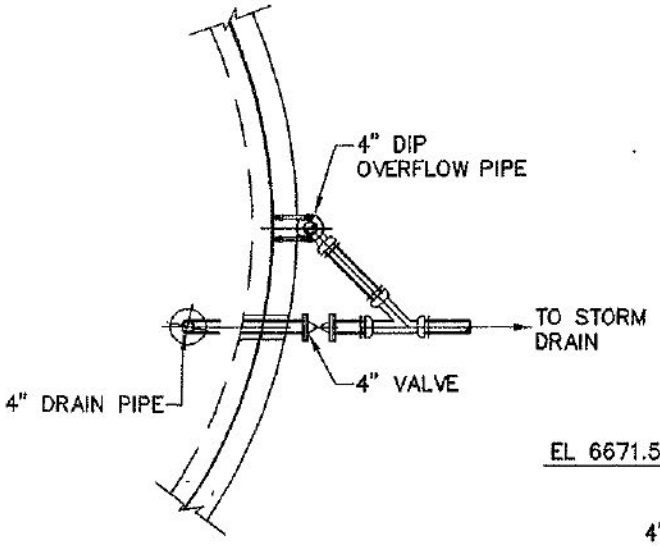

A – PLAN VIEW

NOT TO SCALE

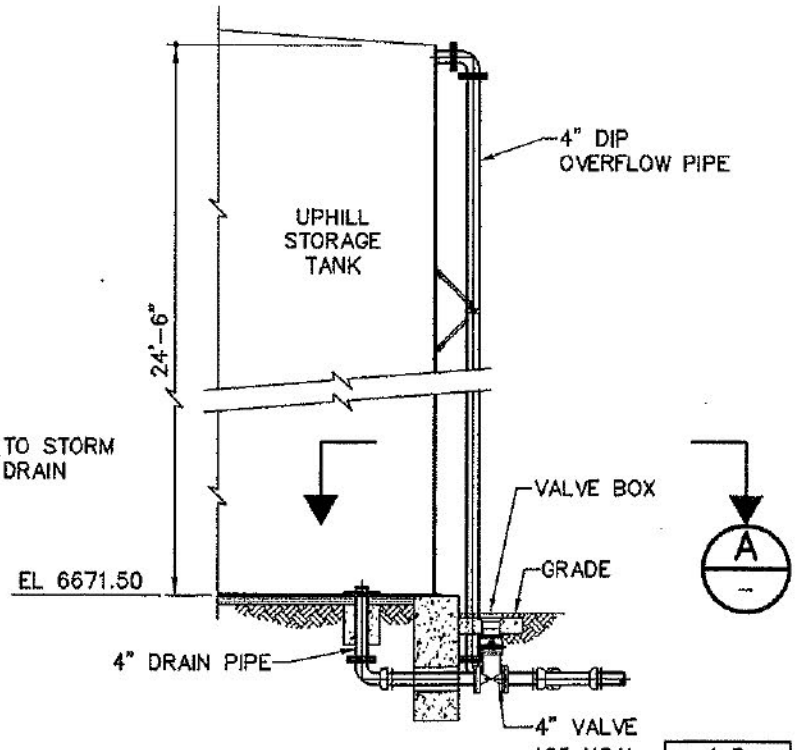

125 KGAL	1 D
TANK NO 1	2 D
TANK NO 2	3 D

ELEVATION OVERFLOW/DRAIN DETAIL

NOT TO SCALE

Grand Canyon National Park Airport
Water Supply, Treatment Facility and Deicing System
Operations and Maintenance Manual

UPHILL STORAGE TANK
INLET/OUTLET AND
OVERFLOW/DRAIN DETAILS
Figure No. 2-5

U:\CADD\9706\OandM\9706OM06.dwg 03/08/99 12:56 pm

Table 2-5. 1.4 Mgal Uphill Storage Tanks

Parameter	Description
Material of Construction:	Welded Steel
Number:	2
Capacity to Overflow:	1.44 Mgal
Diameter:	100 ft
Height:	26 ft
Elevation (ft): **Tank Top:** **Tank Floor:** **Outlet Pipe Riser Elevation:** **Drain Pipe Riser Elevation:** **Influent Pipe Riser Elevation:** **Overflow Pipe Invert:**	 6697.56 6671.50 6672.25 6672.25 6672.25 6695.33
Footing:	Reinforced Concrete Ringwall
Roof:	Sloped, 3/8-inch Rise per 12 ft Run
Vent Size :	6 inches
Inlet, Outlet, Overflow, and Drain Piping:	4 inch DIP
Internal Wall Coatings:	Surface Preparation - SSPC-SP5 White Metal Abrasive Blast Cleaning Prime Coat - Tnemec Series FC20-WHO2 (tank white) Pota-Pox, 1 Coat, 4-6 mils dry film thickness (DFT) Intermediate Coat - Tnemec Series 20-1255 (beige) Pota-Pox Plus, 1 Coat, 4-6 mils DFT Finish Coat - Tnemec Series FC20-WHO2 (tank white) Pota-Pox,1 Coat, 4-6 mils DFT
External Wall Coatings:	Surface Preparation - SSPC-SP5 Commercial Abrasive Blast Cleaning Prime Coat - Tnemec Series 4-55 (red) Vesare Primer, 1 Coat, 3 mils DFT Finish Coat - Tnemec Series 2H (balsam) Hi-Build Tneme-Gloss, 2 Coats, 1.5 mils DFT per coat.

2.3.2.1 30 Kgal Raw Water Under Ground Storage Tank

The 30 Kgal underground storage tank is located underneath the water treatment facility room. The tank is made of concrete and is 10 ft deep. Tank features and piping are listed in Table 2-6. Details of the valve controls are shown in Figure 2-6 Plan and Section of Valve Controls, for 30 Kgal Storage Tank. A section view of the tank is provided in Figure 2-7 30 Kgal Underground Storage Tank Section.

An inlet solenoid valve and level switch control the water level in the tank. Water from the 30 Kgal tank is pumped into the water treatment system inlet with an influent pump. The piping

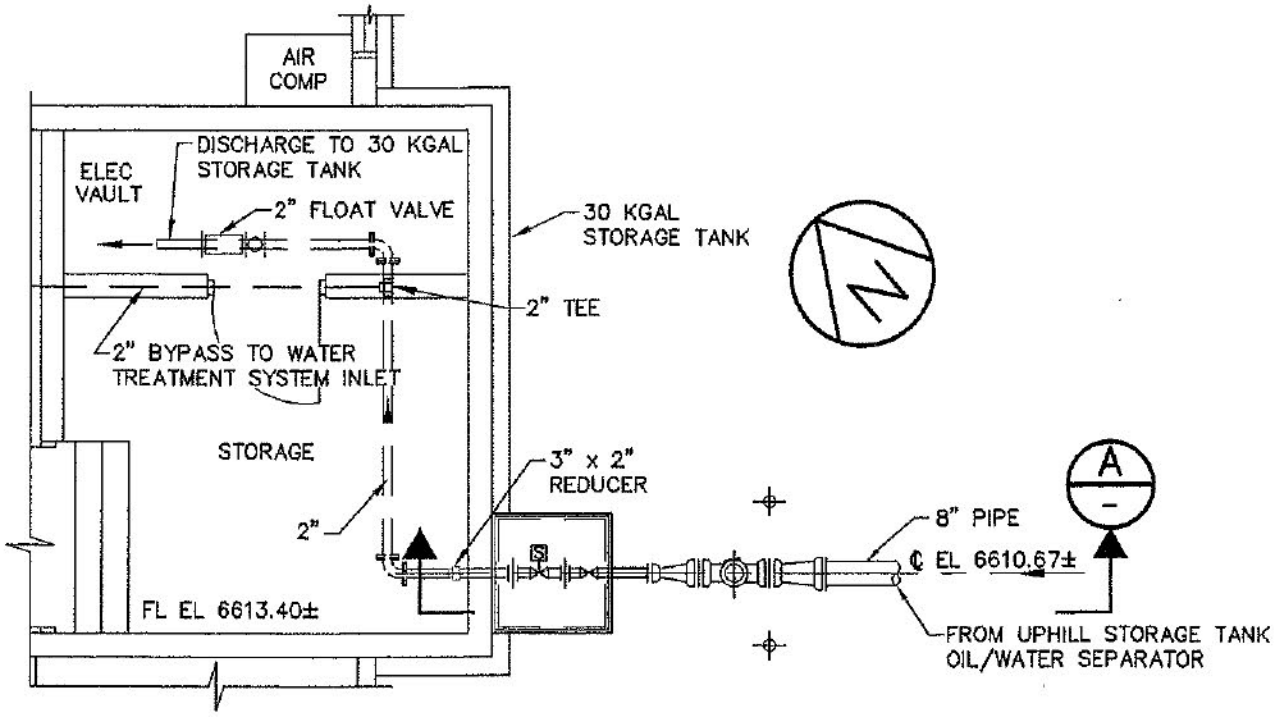

PLAN

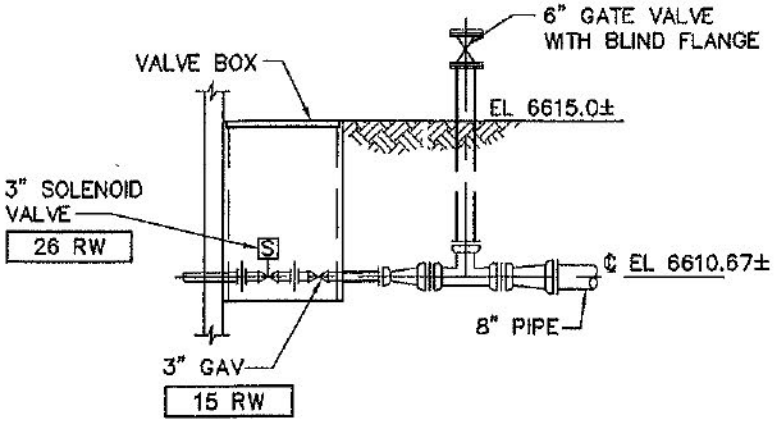

A – SECTION

Grand Canyon National Park Airport
Water Supply, Treatment Facility and Deicing System
Operations and Maintenance Manual

PLAN AND SECTION
OF VALVE CONTROLS
FOR 30 KGAL STORAGE TANK
Figure No. 2–6

U:\CADD\9706\OandM\97060M08.dwg 03/08/99 1:00 pm

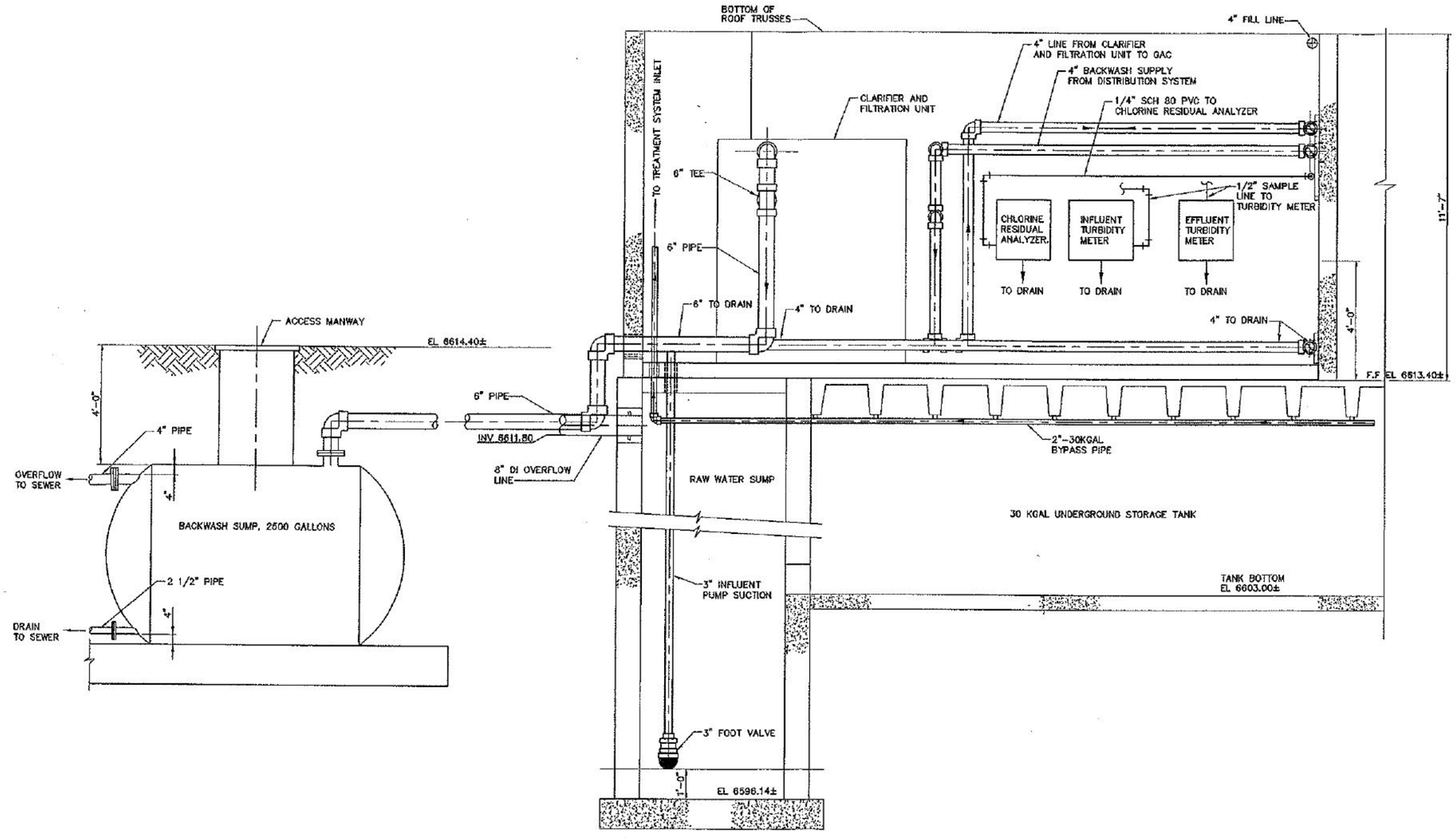

Grand Canyon National Park Airport
Water Supply, Treatment Facility and Deicing System
Operations and Maintenance Manual

30 KGAL UNDERGROUND STORAGE TANK SECTION

Figure No. 2-7

U:\CADD\9706\OandM\9706OM29.dwg 03/08/99 2:05 pm

configuration also allows the gravity bypass of uphill storage tank area flows around the 30 Kgal storage tank and the influent pump, directly into the inlet of the water treatment system. A float valve is installed on the 30 Kgal tank inlet pipe and serves as a manual, automatic inflow shutoff valve when the tank level becomes high.

Table 2-6. 30 Kgal Underground Storage Tank

Parameter	Value
Capacity:	30 Kgal
Depth:	10
Area:	400 sq. ft.
Level Switch, Type:	Ultrasonic
Float Switch, Type:	Mechanical
Inlet Pipe Size from uphill storage tank:	3 inch
Suction Pipe Size to water treatment facility influent pump:	3 inch
Bypass to treatment system:	2 inch
Elevation (ft): **Tank Bottom:** **Sump Bottom:** **Inlet Pipe Invert:** **Overflow Pipe Invert:**	 6603.00 6596.14 6610.59 6611.80
Access Hatches:	Two 2-ft. square

2.3.2.2 Deicing and Backwash Flow Storage Sumps

The Airport also has two smaller underground storage sumps. The tanks, referred to as sumps are constructed of fiberglass with double wall containment configurations with capacities of 2,500 gallons each. The backwash sump is located outside the treatment facility building. The backwash sump stores backwash water to prevent sewer surcharging. The second sump is used for the storage of wasted and excess deicing fluid that drains into the tank from the deicing pad located on the East side of the apron. Solutions held in the deicing sump are pumped out of the sump and fed at a controlled rate into the sewer. See Section 3 (backwash sump) and Section 12 (deicing solution sump) for locations of the sumps.

2.4 POTABLE WATER STORAGE

2.4.1 375 Kgal Underground Storage Tank

Potable water storage consists of a 375 Kgal potable water underground storage tank. The 375 Kgal underground storage tank provides a potable water supply to the Airport fire and domestic systems.

The 375 Kgal underground storage tank is located between the airport terminal and the fire station. The potable water produced by the water treatment facility is stored in this tank and is pumped to the fire and domestic systems using two pairs of vertical turbine pumps.

The storage tank is divided into two compartments for redundancy. Each storage tank compartment is filled by one 3-inch PVC discharge pipe from the water treatment facility. Each compartment has a pipe loop consisting of a recirculation pump, pump discharge chlorine feed point, pump discharge diffuser, and associated piping and valves. Each recirculation pump is operated continuously. Details of the recirculation pumps and disinfection process are presented in Section 3. The recirculation pump 3-inch PVC suction pipes (one for each compartment) draw water from the north end of the storage tank and return the water to the south end of the compartments. Sodium hypochlorite is added at the recirculation pump discharge points and the chlorinated discharge is diffused through a 2-inch PVC pipe loop drilled with 5/16-inch holes at the bottom of each tank compartment. Sodium Hypochlorite is fed into the pump discharge to maintain a tank chlorine residual for disinfection purposes. A detailed view of the east chamber diffuser for the 375 Kgal storage tank is displayed in Figure 2-8 Plan and Sections for 375 Kgal Storage Tank.

The operation of water distribution (domestic and fire water supply) pumps is controlled by the ultrasonic level sensor in the 375 Kgal storage tank as well as pressure in the hydropneumatic tank. Design details for the 375 Kgal storage tank are provided in Table 2-7.

Table 2-7. 375 Kgal Underground Storage Tank

Parameter	Description
Total Capacity (Kgal):	375, total volume divided into 2 compartments
Material:	Reinforced Concrete
Area (sq ft):	3250
Elevation (ft):	
Tank Bottom:	6603.68
Sump Bottom:	6596.74
Inlet Pipe Riser:	6599.40
Overflow Invert:	6613.00
Bottom of Roof Slab:	6611.20
Access Hatches:	Four 30-inch square, two per compartment
DIFFUSER PIPE	
Diameter (in):	2
Material:	PVC
PIPE TO DIFFUSER	
Diameter (in):	3
Material:	PVC
LEVEL SENSOR	
Type:	Ultrasonic

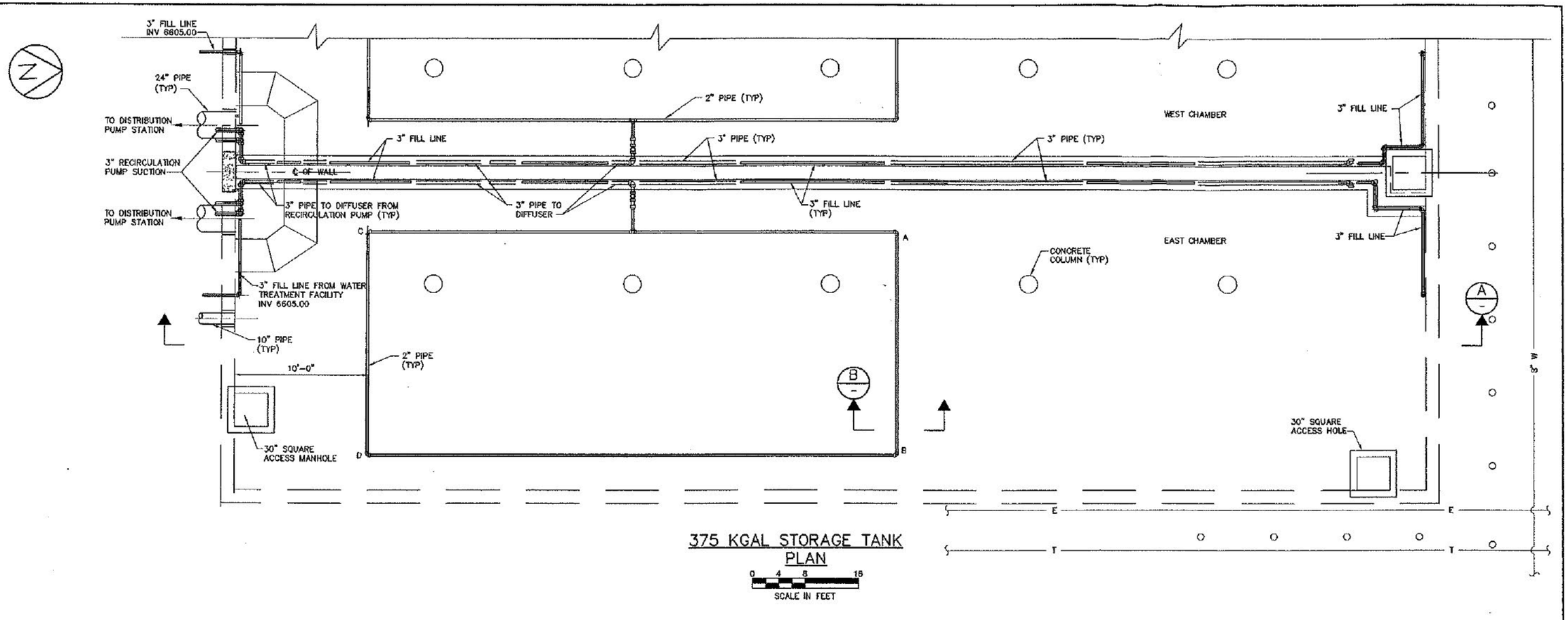

375 KGAL STORAGE TANK
PLAN

0 4 8 16
SCALE IN FEET

A — TANK SECTION

B — TYPICAL SECTION THRU DIFFUSER
NOT TO SCALE

Grand Canyon National Park Airport
Water Supply, Treatment Facility and Deicing System
Operations and Maintenance Manual

PLAN AND SECTIONS
FOR 375 KGAL STORAGE TANK

Figure No. 2-8

U:\CADD\9706\OandM\97060M09.dwg 03/08/99 1:55 pm

2.4.2 BACKUP POTABLE WATER TRANSMISSION

The backup, off-site source of potable water is provided by a private water company, Hydro Resources, which supplies potable water to the majority of the residents and businesses in Tusayan, Arizona. The backup system consists of a 6-inch potable water transmission main running from the Tusayan potable water distribution system at the northern boundary of the airport to the 375 Kgal underground storage tank. The routing of this line across the airport property is shown in Figure 1-1. A backflow preventer , sample port and water meter are installed at the connection point of the two systems as shown in Figure 2-9 Off Site Potable Water Connection Point. Details of the water meter are shown in Figure 2-10 Off-site Potable Water and Reuse Meter Details.

The 6-inch back-up potable water transmission main reduces to 4-inch just before connecting to the 10-inch distribution system pump pressure relief line discharging back to the 375 Kgal underground storage tank. The 4-inch potable water transmission line has a motorized valve with isolation valves on either end and a bypass line and valve. The operation of the motorized valve is interlocked with the level switch in the 375 Kgal underground storage tank. Design details for the backup potable water connection to the 375 Kgal underground storage tank are shown in Table 2-8. A detailed view of the backup potable water transmission line connection to the 375 Kgal underground storage tank is shown in Figure 2-11 Backup Potable Water Connection to 375 Kgal Underground Storage Tank.

Table 2-8. Backup Potable Water Transmission Piping and Equipment

Parameter	Description
Connection Size:	4 inch DIP
Pipe Joint, Type:	Buried - Mechanical Exposed - Flanged
Valves:	5 Manual Gate Valves 1 Motorized Butterfly Valve
Backflow Preventer:	1 Reduced Pressure Type
Sample Port:	2 sample ports with ball valve (1.5 inch diameter)
Water Meter:	1

2.5 REUSE WATER TRANSMISSION

Reuse water from the South Grand Canyon Sanitary District (SGCSD) can be made available for Airport use. A transmission line from the SGCSD distribution system has been extended into the Airport property as shown in Figure 1-1. The SGCSD transmission line has been capped at a connection point to the Airport reuse water distribution piping system as shown in Figure 2-12 Future Connection Point for Airport Reuse Water System to SGCSD Distribution System. In the event the airport and SGCSD systems are connected, all cross-connections with the airport reuse and potable water systems shall be prevented. Appropriate ADEQ bulletin guidelines should be used to ensure that cross-connections of the reuse distribution water system do not occur with the

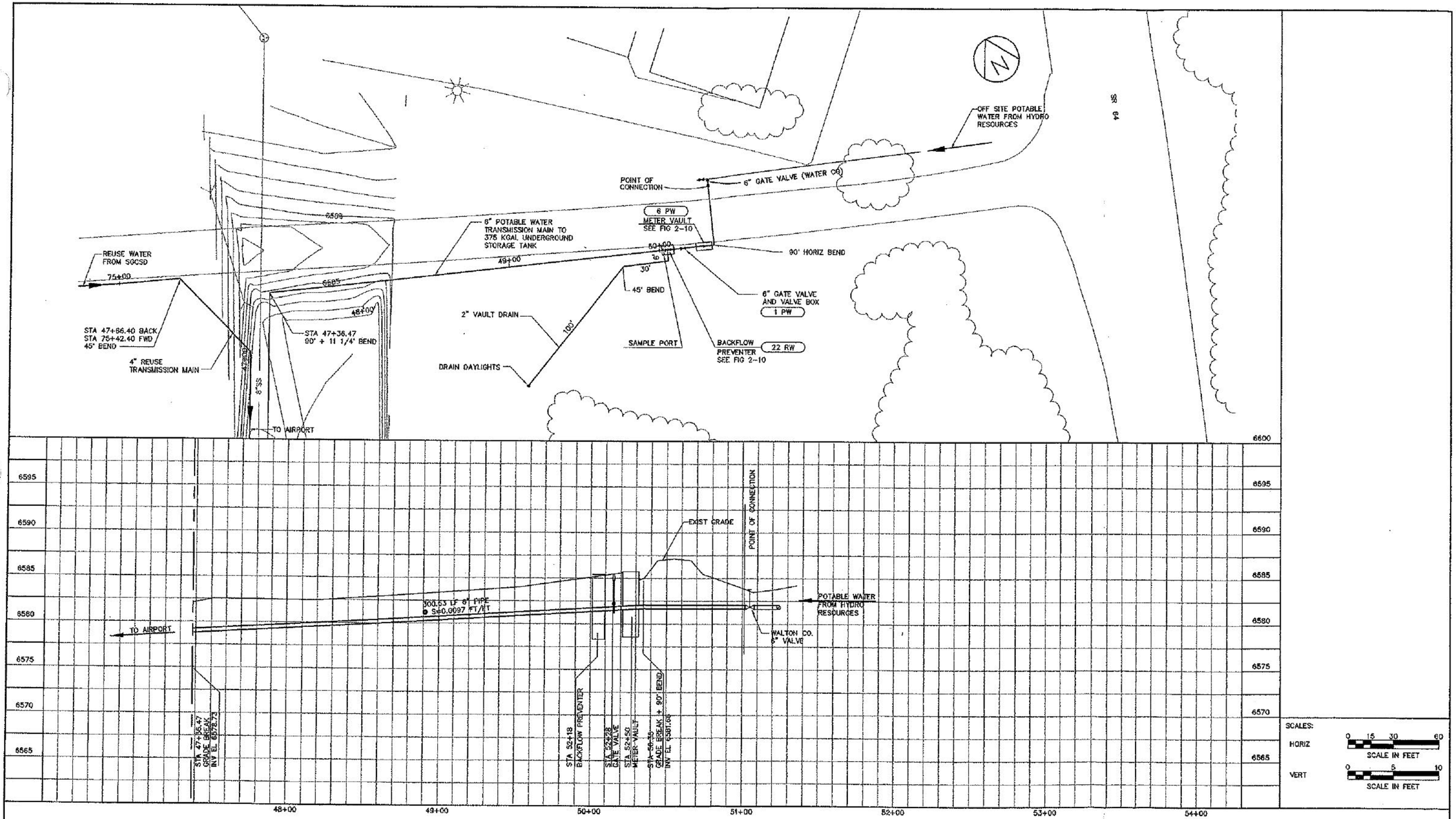

Grand Canyon National Park Airport
Water Supply, Treatment Facility and Deicing System
Operations and Maintenance Manual

OFF-SITE POTABLE WATER CONNECTION POINT

Figure No. 2-9

U:\CADD\9706\OandM\9706OM25.dwg 03/08/99 3:09 pm

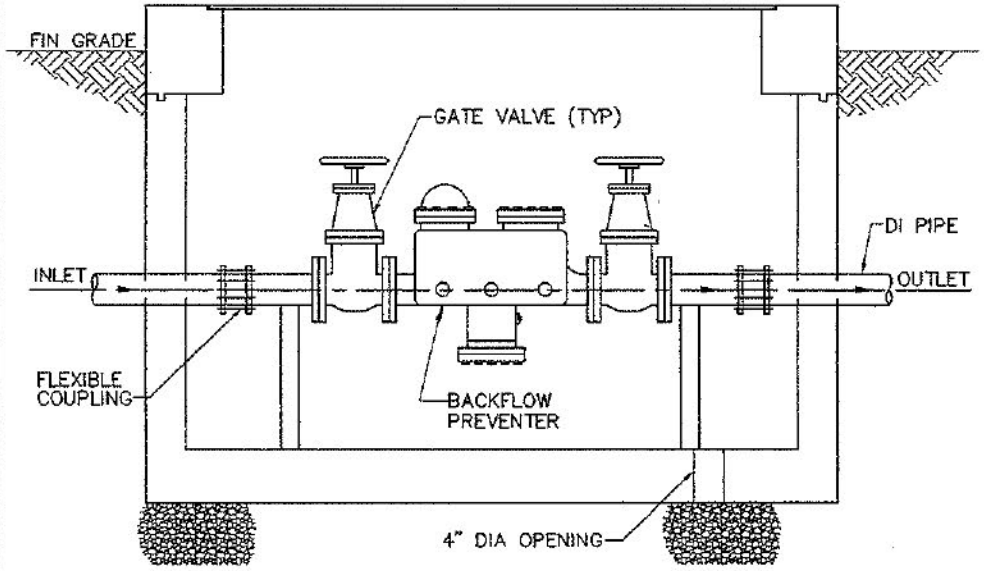

OFF-SITE POTABLE WATER
REDUCED PRESSURE PRINCIPLE
BACKFLOW PREVENTER

22 RW

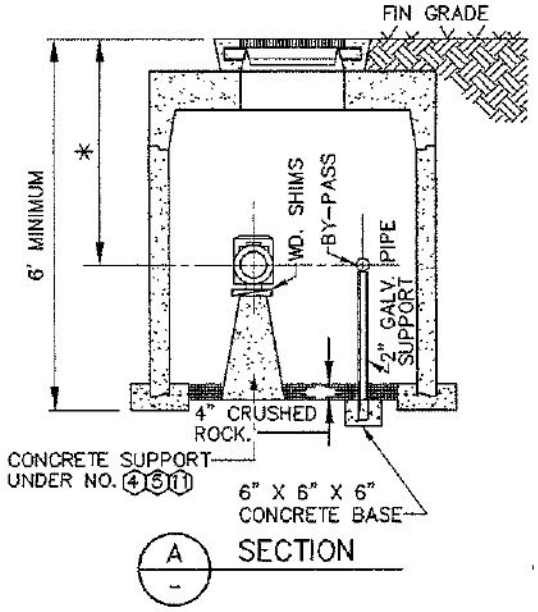

A – SECTION

REUSE/OFF-SITE POTABLE WATER METER DETAILS

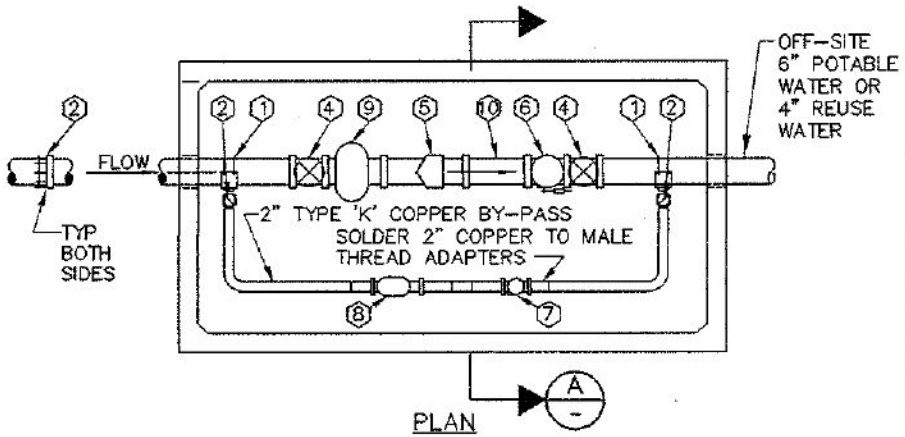

REUSE/OFF-SITE POTABLE WATER METER DETAILS

KEY NOTES

1. DOUBLE STRAP ALL BRONZE SERVICE SADDLES.
2. CORP. STOP, 2" (BALL TYPE).
3. ADAPTER, FLANGED TO MECH. JOINT FOR A.C.P.
4. GATE VALVE, FLANGED, WITH HAND WHEEL, OPEN LEFT.
   REUSE WATER (1 RU) (2 RU),
   POTABLE WATER (2 PW) (3 PW)
5. WATER METER
6. FLANGED SWING CHECK VALVE WITH EXTERNAL LEVER AND WEIGHT. REUSE (3 RU),
   POTABLE WATER (6 PW)
7. 2" BRONZE CHECK VALVE.
   REUSE (4 RU),
   POTABLE WATER (7 PW)
8. 2" WATER METER
9. STRAINER
10. FLANGED SPOOL (3 PIPE DIAMETERS IN LENGTH)
11. O.S.&Y. GATE VALVE, FLANGED WITH HAND WHEEL OPEN LEFT, NAD RISING STEM.

Grand Canyon National Park Airport
Water Supply, Treatment Facility and Deicing System
Operations and Maintenance Manual

OFF-SITE POTABLE WATER BACKFLOW PREVENTER AND REUSE/OFF-SITE POTABLE WATER METER DETAILS

Figure No. 2-10

U:\CADD\9706\OandM\9706OM26.dwg 03/08/99 1:51 pm

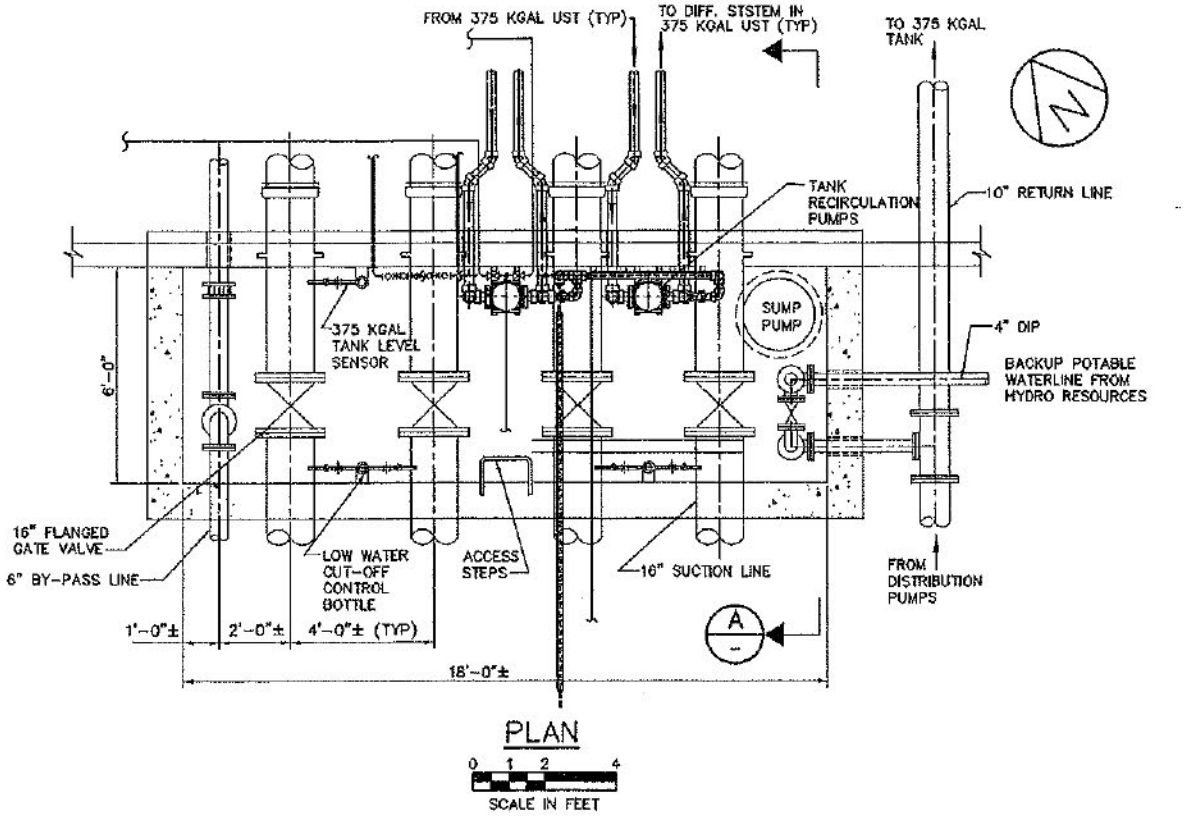

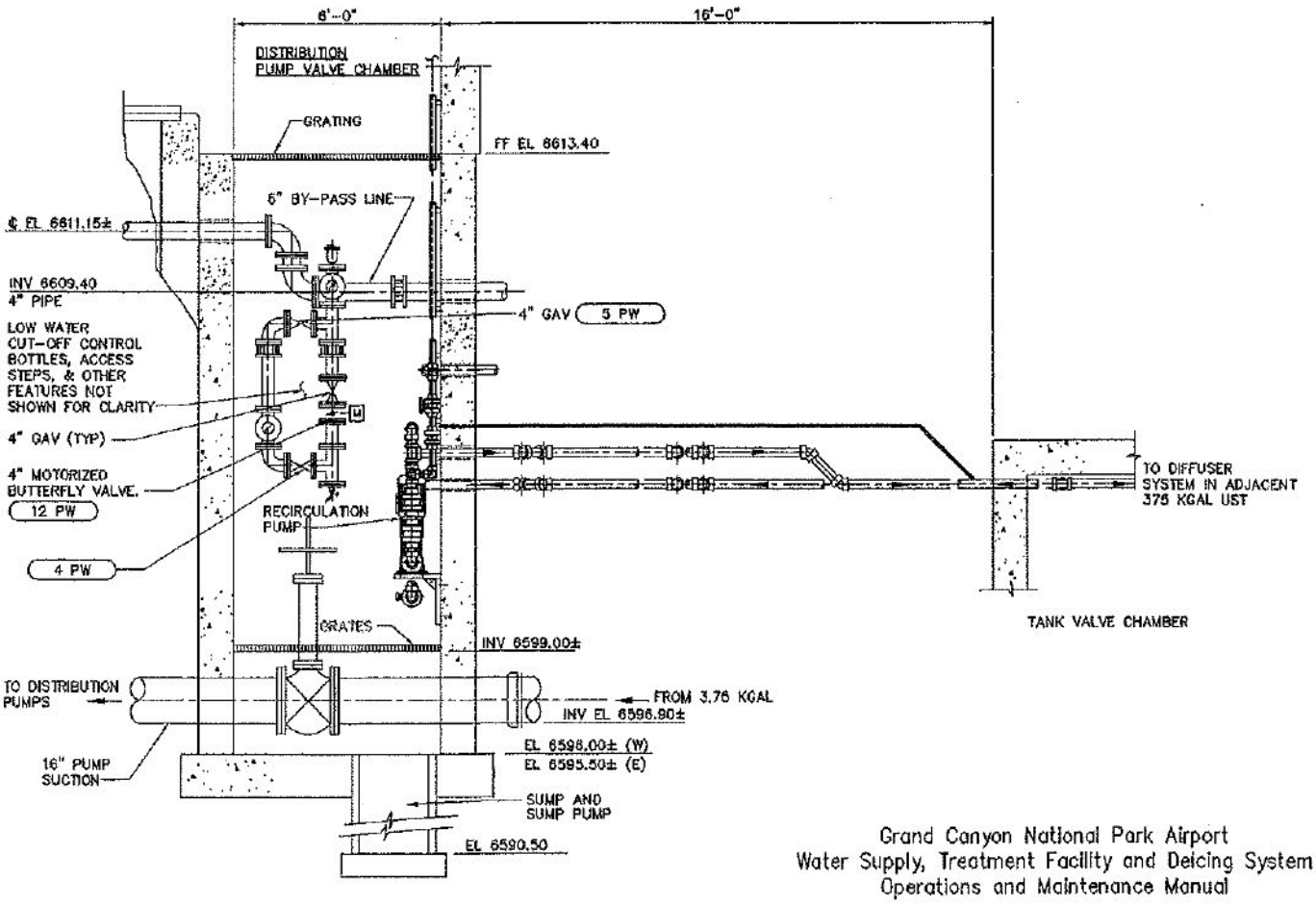

Grand Canyon National Park Airport
Water Supply, Treatment Facility and Deicing System
Operations and Maintenance Manual

BACKUP POTABLE WATER CONNECTION TO 375 KGAL UNDERGROUND STORAGE TANK

Figure No. 2-11

U:\CADD\9706\OandM\97060M10.dwg 03/08/99 1:07 pm

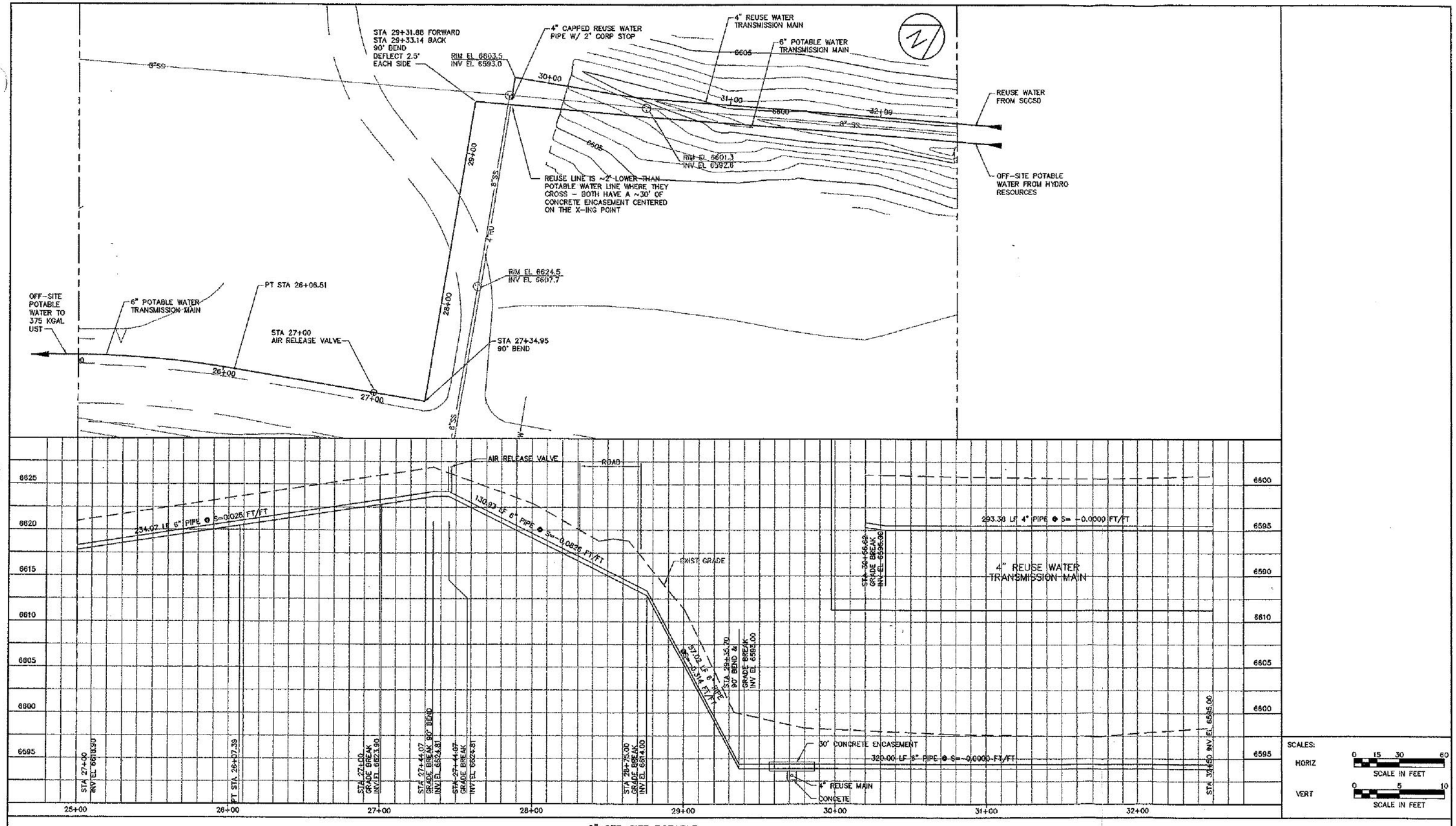

6" OFF-SITE POTABLE
WATER TRANSMISSION MAIN

Grand Canyon National Park Airport
Water Supply, Treatment Facility and Deicing System
Operations and Maintenance Manual

FUTURE CONNECTION POINT FOR
AIRPORT REUSE WATER SYSTEM TO
SGCSD DISTRIBUTION SYSTEM
Figure No. 2-12

U:\CADD\9706\OandM\9706OM24.dwg 03/08/99 3:09 pm

potable water distribution system. When an agreement is finalized with the SGCSD, reuse connections to the terminal sanitary and landscape irrigation facilities are anticipated.

3 DESCRIPTION OF TREATMENT FACILITY

3.1 ON-SITE CATCHMENT AREA - GOOD HOUSEKEEPING

The water treatment system is not intended to treat contamination that enters the catchment basins. The catchment area basin should be inspected on a regular basis to detect situations which may lead to basin contamination. The catchment liner and berms should be properly maintained to protect the water stored in the basins from outside contamination or flows. Only direct precipitation inputs to the basins should be allowed.

3.2 PRETREATMENT

In addition to source protection, which includes the berm around the basins and a controlled pumping system, the 125 Kgal raw water uphill storage tank and oil/water separator pretreatment system are employed to remove the residual floatable or suspended materials in the raw water before it enters the water treatment system. The 125 Kgal tank is described in Section 2.3.1.1.

3.2.1 Oil/Water Separator

An above ground oil/water separator is located in the uphill 1.4 Mgal storage tank area (See Figure 2-3 for general location). The separator is used to remove floatable and suspended materials from raw water collected in the catchment basin. A detailed view of the oil/water separator is provided in Figure 3-1 Oil/Water Separator Details. The oil separator is continually operated. During exceptionally cold winter periods the oil/water separator may have to be bypassed due to frozen aboveground piping.

Water retained in the 125 Kgal and 1.4 Kgal uphill storage tanks is conveyed to the oil water separator at a constant flow rate. A constant inlet flow rate to the separator is accomplished with a flow control valve located in a valve vault at the influent point of the separator. A detailed view of the vault is provided in Figure 3-2 Oil/Water Separator Flow Control Valve. Treated water from the oil water separator flows by gravity to the water treatment facility 30 Kgal raw water storage tank. Water discharged from the oil water separator cannot be returned to the uphill storage tanks area. A progressing cavity pump is located by the separator and it is used to remove settled solids from the bottom of the separator sludge tank. Oil and sludge waste collected by the separator shall be disposed of as described in Section 8.11.

The oil/water separator, valve and pump information and design criteria are provided as follows:

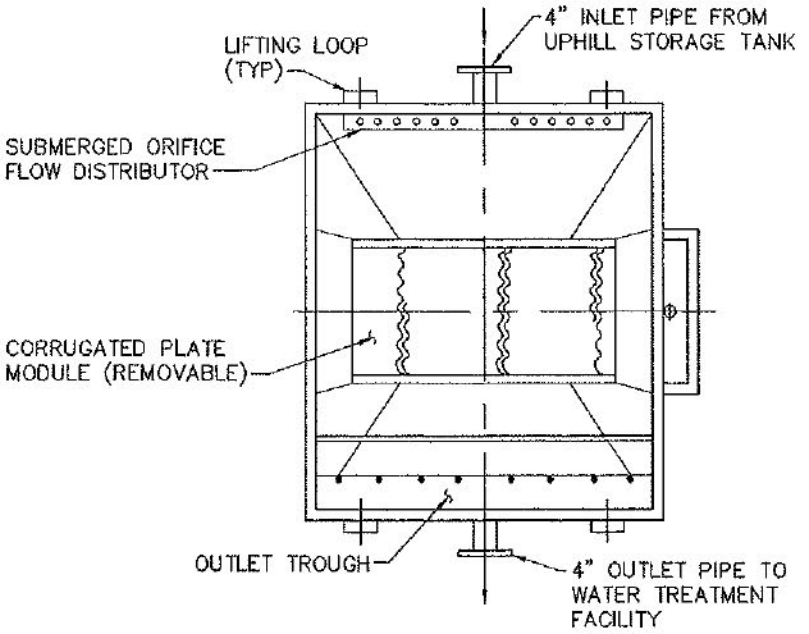

PLAN VIEW

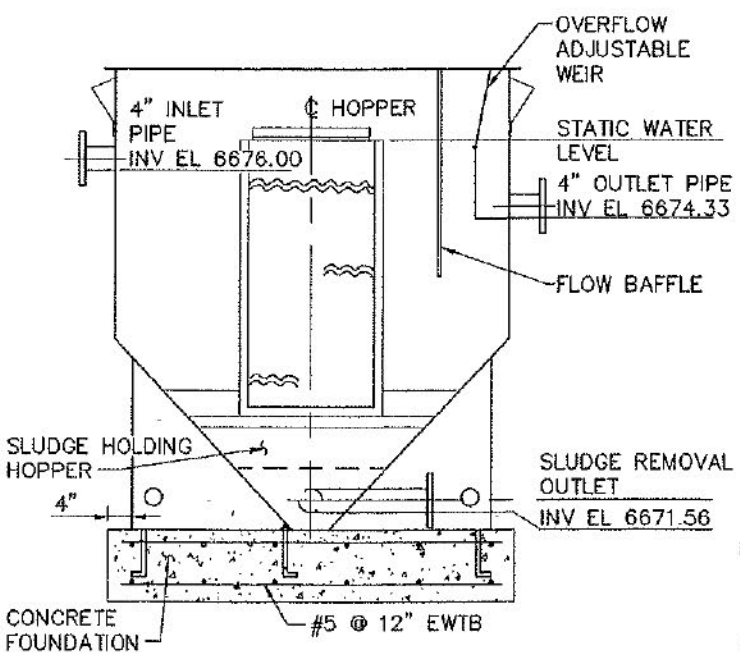

END ELEVATION

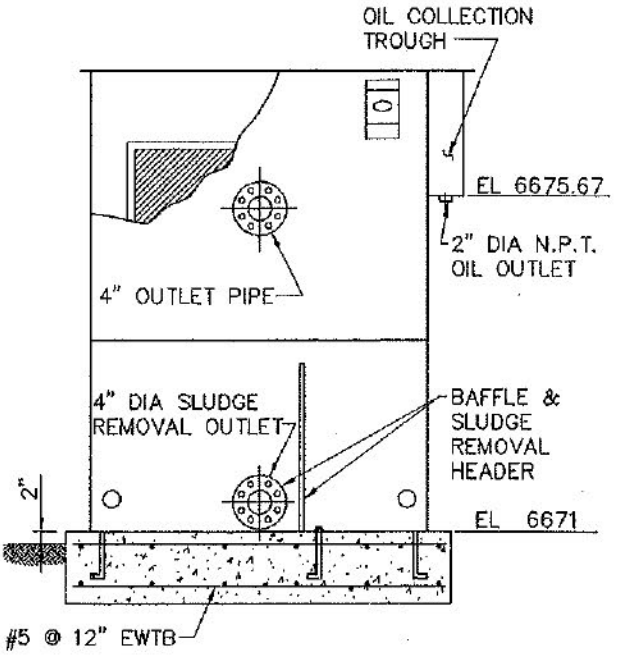

ELEVATION

OIL/WATER SEPARATOR

NOT TO SCALE

Grand Canyon National Park Airport
Water Supply, Treatment Facility and Deicing System
Operations and Maintenance Manual

OIL/WATER SEPARATOR DETAILS

Figure No. 3-1

U:\CADD\9706\OandM\9706OM11.dwg 03/08/99 1:32 pm

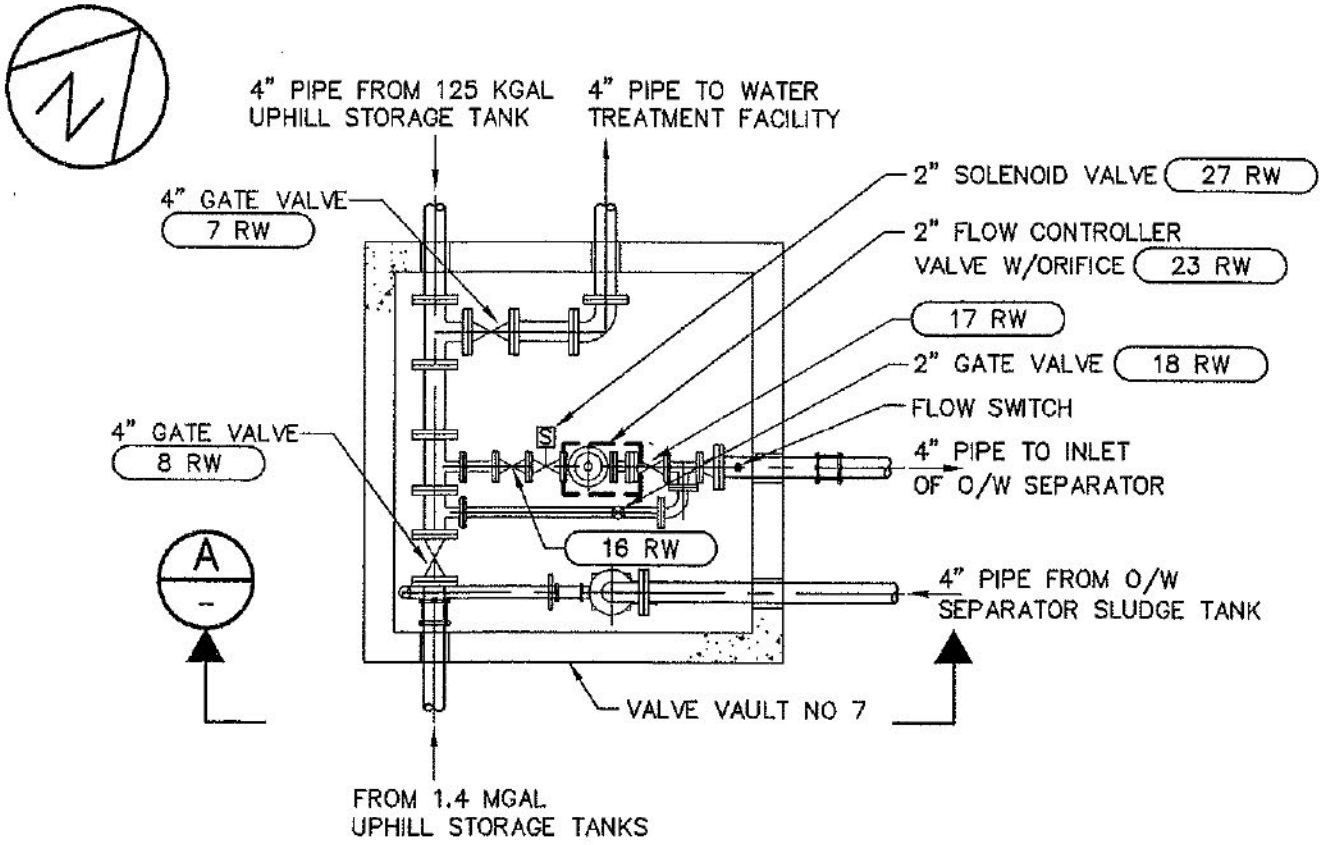

PLAN

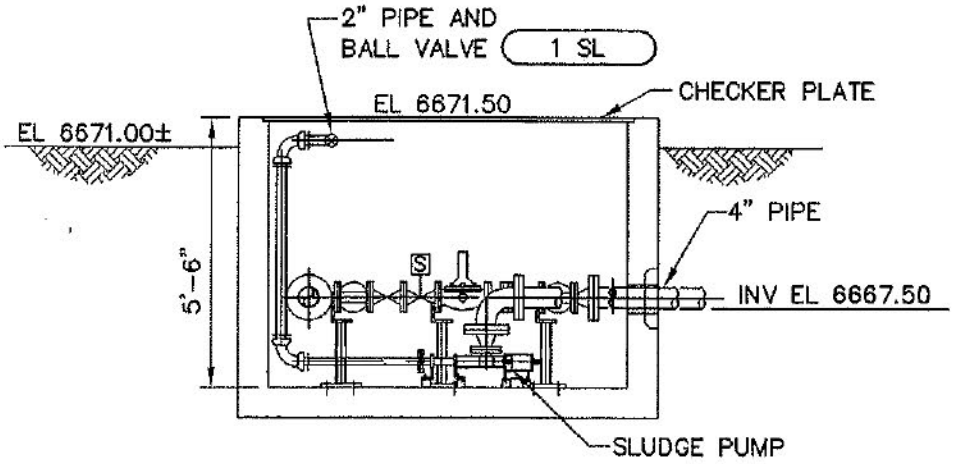

A SECTION

NOT TO SCALE

Grand Canyon National Park Airport
Water Supply, Treatment Facility and Deicing System
Operations and Maintenance Manual

OIL/WATER SEPARATOR
FLOW CONTROL VALVE

Figure No. 3-2

U:\CADD\9706\OandM\9706OM07.dwg 03/08/99 12:56 pm

Table 3-1. Oil Water Separator

Separator Manufacturer:	Ellis Corporation	
Model Number:	WOWS-048	
Model Type:	Corrugated Plate Oil Separator	
Design Flowrate (gpm):	85	
Dimensions (inches):	96L x 54W x 60H	
Materials **Tank shell and Baffles:** **Coalescing Media:**	 304 SST PVC	
Design Performance:	At design flow rate produce an effluent containing less than 15 mg/L of oil droplets larger than 20 microns.	
Sludge storage capacity (gallons):	22	
Piping Details	**Pipe Diameter (inches)**	**Pipe Invert Elevation (feet)**
Water Inlet	4	6676
Water Outlet	4	6674.33
Oil Waste Line	2	6675.67
Sludge Waste Line	2	6671.58

Table 3-2. Oil Water Separator Inlet Flow Control Valve

Inlet Flow Control Valve Type:	Flow Control Valve (FCV) with Orifice
Manufacturer:	CLA-VAL
Model:	40-01
Main Valve Model:	100-01 Hytrol Valve (Globe)
Valve Tag Number:	23 RW
Main Valve Material:	Ductile Iron
Size:	2" Flanged
Max. Continuous Flow (gpm):	208
Min. Continuous Flow (gpm):	15
Flow Setting (gpm) :	85
Features:	X46A Flow Clean Strainer

Table 3-3. Oil Water Separator Sludge Pump

Pump Manufacturer:	Moyno Industrial Products		
Model:	Moyno 1000 Series, Model A1D, CDQ SPA, Single Stage Progressing Cavity Pump		
Design Criteria			
Design Flow :	20.5 GPM @ 30 ft		
Inlet Size (in):	2.5" 125# Flat Faced Flange		
Discharge Size (in):	2.5" 125# Flat Faced Flange		
Pump Design Speed (rpm):	704		
Materials			
Rotor:	4150 Alloy Tool Steel with 0.010" hard chrome plate, minimum 550 Brinell		
Bearings:	Grease lubricated, taper roller type, 60K hours, min. L-10 life.		
Shaft Seal:	Durametallic single mechanical seal		
Stator:	Nitrile		
Castings:	Cast Iron		
Nameplate:	Stainless Steel with Standard Data		
Surface Preparation:	SSPC-SP1 & SP3		
Primer Paint:	Tnenec #139, 6 mils DFT min.		
Motor Manufacturer:	Baldor AC Motor	**Service Factor:**	1.15
HP:	2	**Voltage:**	1-60-230
Motor Speed:	Constant	**Enclosure:**	TEFC
Motor Speed (rpm):	1725	**Insulation:**	Class F
Frame:	56C	**Thermal Protection:**	None
Duty:	Continuous	**Other Features:**	Ball Bearings Condensate Drains Epoxy Paint
Speed Reducer Manufacturer:	Eurodrive	**Model Number:**	RX61
Drive Ratio:	2.45:1	**Design Speed Output:**	704 rpm
Class:	II		
Coupling:	Flexible, Lovejoy, L100		
Base Plate:	Fabricated Steel Base Plate with OSHA standard galvanized coupling guard. Standard in-line/rectangular base plate with drain rim and grout holes.		

3.3 WATER TREATMENT FACILITY

The water treatment facility includes the following main components:

- Package Treatment System (Adsorption Clarifier / Mixed Media Filter)
- GAC Adsorption Columns
- Disinfection system

Auxiliary treatment facility systems include:

- Raw water conveyance pump (raw water pumped from the 30 Kgal under ground storage tank to absorption clarifier)
- Filtered water conveyance pump (effluent from the mixed media filter pumped to the GAC columns)
- Coagulant chemical dose system including two chemical feed pumps and storage tanks.
- An air blower for air scouring of package plant clarifier and filter media during backwash.
- Backwash piping system that uses water distribution system supply and pressure.
- Backwash waste sump.
- Miscellaneous Chemical Storage Facilities

The water treatment facility treats raw water flows of up to 85 gpm and produces a treated effluent with turbidity below 0.5 NTU to meet Safe Drinking Water Act requirements.

The water treatment facility and distribution pump station plan is provided in Figure 3-3 Water Treatment Facility and Distribution System Pump Station Plan. Figure 3-4 Water Treatment Facility Room Plan, provides a detailed plan view of the water treatment facility room. A schematic of the water treatment facility is shown in Figure 3-5 Water Treatment Facility Schematic.

3.3.1 Package Treatment System

The adsorption clarifier and mixed media filter are integrated components of the U.S. Filter Trimite package water treatment system. General details of the package plant are shown as follows:

Table 3-4. Package Treatment System General Information

Manufacturer:	US Filter
Model:	TM-75A Trimite
Tank Dimensions (ft):	6.33 L x 4.1 W x 7.5 H
Design Flow (gpm):	85
Pipe Connections	
Influent (in.):	2.5
Effluent (in.):	2.5
Backwash (in.):	4
Waste/Overflow:	6

3.3.1.1 Adsorption Clarifier

Raw water is pumped by the influent raw water pump from the 30 Kgal reservoir or conveyed by gravity from the oil water separator to the inlet of the water treatment facility, the adsorption clarifier. Coagulant chemicals are added and mixed at the inlet point of the adsorption clarifier.

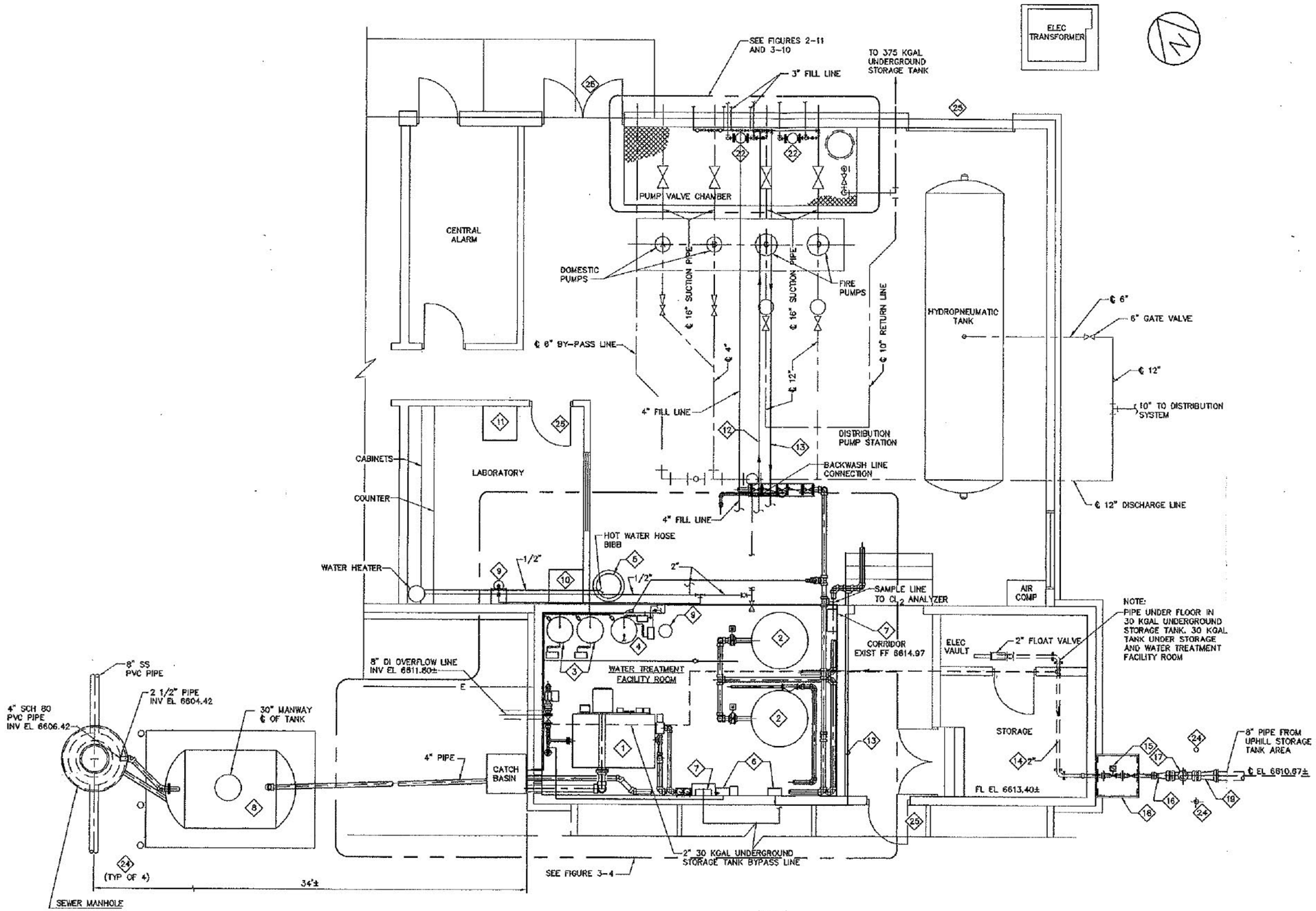

PLAN

SCALE IN FEET 0 2 4 8

KEY NOTES

1. CLARIFIER AND FILTRATION UNIT
2. GAC 1, GAC 2
3. COAGULANT CHEMICAL FEED AREA
4. CHLORINATION FEED SYSTEM
5. DRY ALUM STORAGE TANK
6. TURBIDITY METER
7. CHLORINE RESIDUAL ANALYZER
8. BACKWASH SUMP
9. EMERGENCY SHOWER AND EYEWASH
10. LIQUID SODIUM HYPOCHLORITE STORAGE CABINET
11. DRY ALUM AND LIQUID POLYMER STORAGE CABINET
12. DOUBLE CONTAINMENT PIPE 1/2" SCH 80 x 2" SCH 80 PVC CHLORINE FEED LINE TO RECIRCULATION PUMP IN PUMP VALVE CHAMBER
13. 1/4" SCH 80 PVC TO CHLORINE RESIDUAL ANALYZER
14. 2" INLET PIPE
15. SOLENOID VALVE
16. 6"x 3" REDUCER
17. 6" x 6" x 6" TEE
18. 3' x 3' VALVE BOX SEE FIGURE 2-6
19. 8" x 6" REDUCER
22. RECIRCULATION PUMPS
24. BOLLARDS
25. DOT PLACARDS PER SPECIFICATIONS

Grand Canyon National Park Airport
Water Supply, Treatment Facility and Deicing System
Operations and Maintenance Manual

WATER TREATMENT FACILITY AND DISTRIBUTION SYSTEM PUMP STATION PLAN

Figure No. 3-3

U:\CADD\9706\OandM\97060M13.dwg 03/08/99 2:44 pm

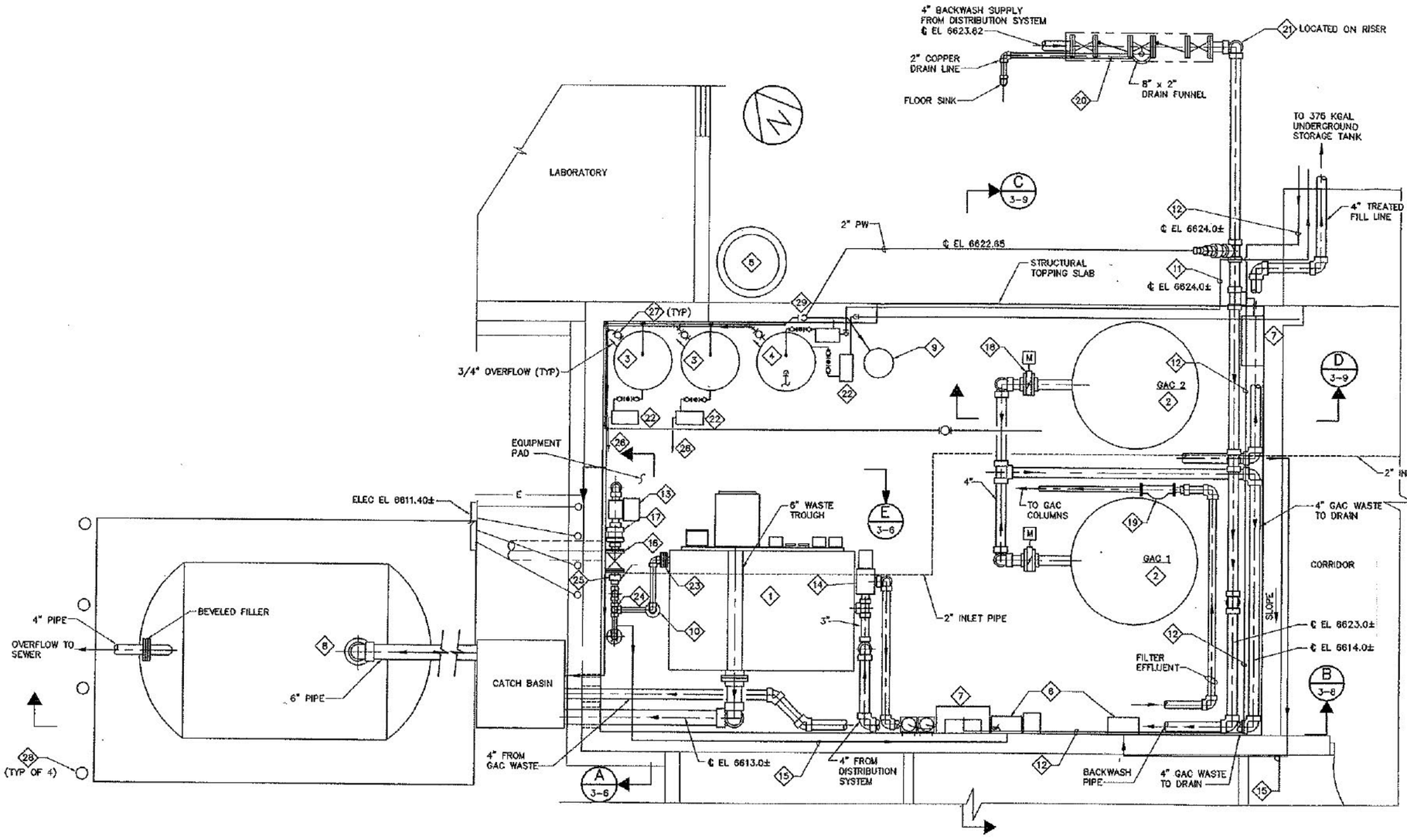

WATER TREATMENT FACILITY ROOM PLAN

0 1 2 4
SCALE IN FEET

KEY NOTES

1. CLARIFIER AND FILTRATION UNIT
2. GAC 1, GAC 2
3. COAGULANT CHEMICAL FEED AREA
4. CHLORINATION FEED SYSTEM
5. DRY ALUM STORAGE TANK
6. TURBIDITY METERS
7. CHLORINE RESIDUAL ANALYZER
8. BACKWASH SUMP
9. EYE WASH AND SHOWER
10. INLINE STATIC MIXER
11. 1/2" SCH 80 x 2" SCH 80 DOUBLE CONTAINMENT PIPE FROM CHLORINE FEED LINE TO RECIRCULATION PUMP IN VALVE CHAMBER
12. 1/4" SCH 80 PVC TO CHLORINE RESIDUAL ANALYZER
13. WATER TREATMENT FACILITY INFLUENT PUMP
14. FILTRATION UNIT EFFLUENT PUMP
15. 1/2" SAMPLE LINE TO TURBIDITY METER
16. 3" GATE VALVE. (14 RW)
17. 3" BALL CHECK VALVE
18. 4" MOTORIZED BUTTERFLY VALVE (TYP)
19. 2" WATER METER
20. 4" BACKFLOW PREVENTER (2 FBW)
21. FLOW CONTROLLER AND PRESSURE REGULATING VALVE ASSEMBLY (INCLUDING ORIFICE) (3 FBW)
22. CHEMICAL FEED PUMPS
23. 2" BUTTERFLY VALVE
24. 2" CROSS W/2" x 1/2" REDUCER FOR CHEMICAL FEED
25. 3" x 2" REDUCER
26. 1/2" TO 24
27. 1/2" DRAIN LINE W/1/2" BALL VALVE FROM CHEMICAL FEED AREA AND CHLORINATION SYSTEM TO BACKWASH SUMP (TYP)
28. BOLLARDS
29. CHEMICAL AREA – SERVICE WATER SEE FIGURE 3-7

Grand Canyon National Park Airport
Water Supply, Treatment Facility and Deicing System
Operations and Maintenance Manual

WATER TREATMENT FACILITY ROOM PLAN

Figure No. 3-4

U:\CADD\9706\OandM\97060M14.dwg 03/08/99 2:45 pm

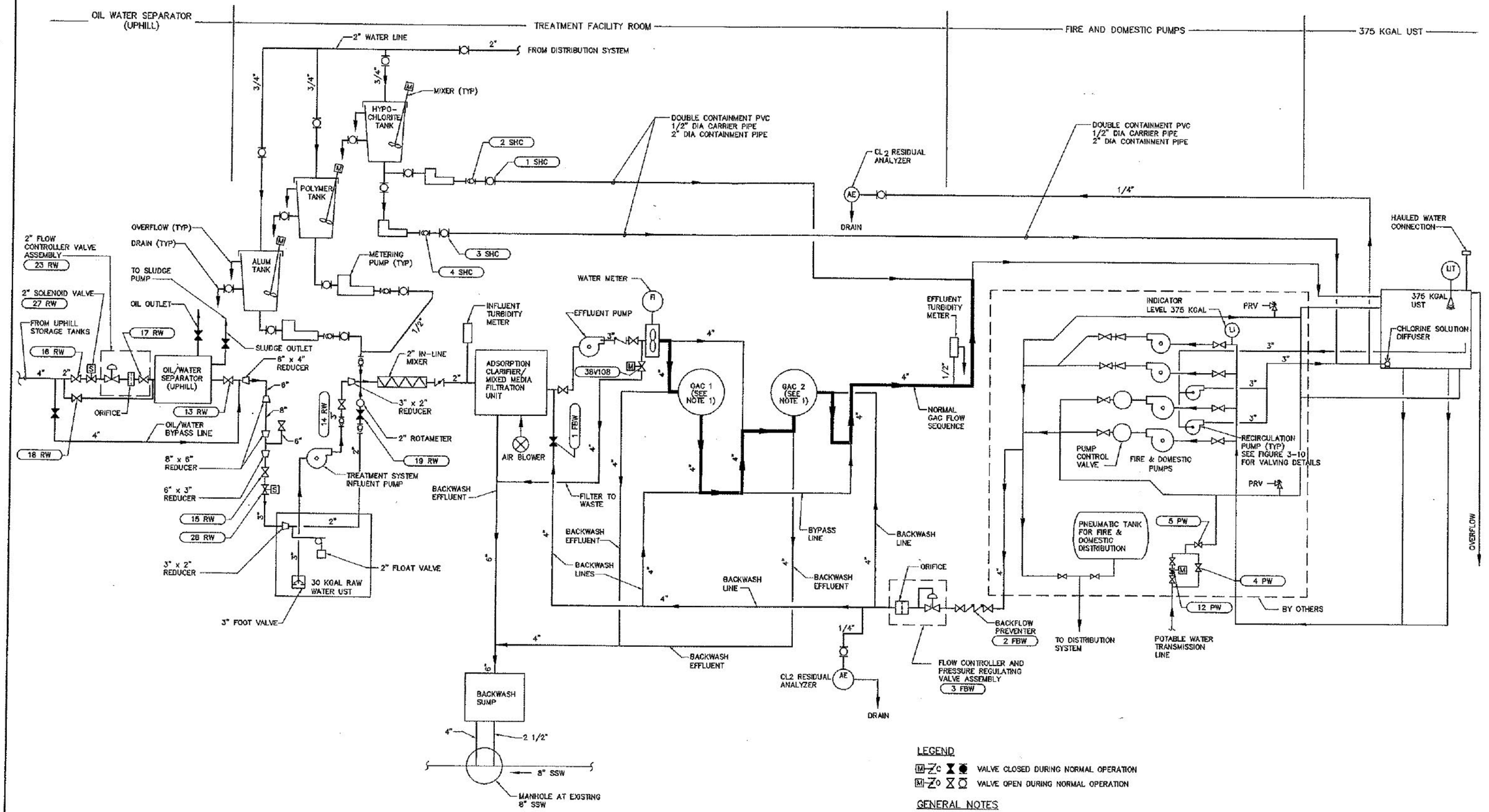

LEGEND

VALVE CLOSED DURING NORMAL OPERATION

VALVE OPEN DURING NORMAL OPERATION

GENERAL NOTES

1. NORMAL OPERATION OF THE GAC IS WITH GAC 2 BEING IN SERIES WITH GAC 1. PARALLEL AND INDIVIDUAL OPERATION IS ALSO POSSIBLE. FOR VALVING DETAILS SEE FIGURE 3-9

Grand Canyon National Park Airport
Water Supply, Treatment Facility and Deicing System
Operations and Maintenance Manual

WATER TREATMENT FACILITY SCHEMATIC

Figure No. 3-5

U:\CADD\9706\OandM\97060M15.dwg 03/08/99 2:39 pm

Clarification is necessary to allow the coagulated and flocculated turbidity particles to settle. The adsorption clarifier process is employed because the process provides enhanced turbidity removal rates without producing excessive flow head loss or requiring large space requirements. Turbidity removed in the clarifier reduces the solids loading to the downstream mixed media filter and extends filter runs. Clarifier effluent flows by gravity to the mixed media filter. Design details of the adsorption clarifier are listed as follows:

Table 3-5. Adsorption Clarifier Information

Clarifier	
Type:	Adsorption (upflow)
Design Details	
Total Surface Area(square ft):	7.5
Upflow Rate (gpm/square ft):	10 at design flow
Media Specific Gravity:	<1.0
Media Material:	50/50 mix of MS110 rolled/scarified HDPE beads and MS107 virgin HDPE beads
Backwash Mode:	Potable water with air scour

3.3.1.2 Mixed Media Filtration

To provide water treatment facility effluent turbidity under 0.5 NTU, clarified water is then passed through a mixed media filter. The design criteria for the filtration system is listed as follows:

Table 3-6. Mixed Media Filter Design Information

Filtration Mode:	**Variable Head, Constant Rate**			
Filtration Rate (gpm/ft²):	**4 to 6**			
Filter Area(ft²):	**15**			
Media	**Depth (in)**	**Product Number**	**Effective Size (mm)**	**Specific Gravity**
Anthracite Coal (Top Media):	18	MS-4	1.2-1.3	1.55-1.65
Silica Sand (Intermediate Media):	9	MS-18	0.35-0.45	2.65
Hi-Density Garnet Sand (Bottom Media):	3	MS-21	0.2-0.32	4.0
Filter Bed Support	Stainless Steel V-wire Screen Under drain			

3.3.1.3 Auxiliary Package Treatment System Equipment - Coagulant Feed System

The main chemical employed for coagulation of raw water turbidity is alum. Raw water coagulation breaks down the forces of repulsion between turbidity particles. Mixing of coagulated particles encourages particle contact and growth of particle size through flocculation. Polymer is added as a filter aid to condition the coagulated/flocculated particles to adhere to the clarifier and filtration media. Alum and polymer addition enhances turbidity removal in the adsorption clarifier and mixed media filter.

The combined chemical feed point for the polymer and alum is shown in Figure 3-4. A detailed view of the coagulant chemical feed point is shown in Figure 3-6 Package Plan Influent Pump and Chemical Feed Point Sections. The alum, polymer and raw water are mixed after the dose point with a static mixer (See Figures 3-4 and 3-6) before entering the adsorption clarifier. The in-line mixing unit blends the chemicals with the raw water to initiate the coagulation and flocculation processes. Design information on the static mixer is provided as follows:

Table 3-7. In-Line Static Mixer

In-line Static Mixer Manufacturer:	**Koflo Corporation**
Model:	**3-80-4-4-1**
Mixer Material:	**Schedule 80 PVC**
Head loss at 85 gpm (psi):	**1.8**
Number of Mixing Elements:	**Four**
Total Length of Elements (inches):	**17**

Alum and/or polymer coagulants are pumped from continuously mixed chemical storage tanks to the feed point by metering pumps. The appropriate alum and polymer dosages can be automatically set based on flow pacing, influent adsorption clarifier turbidity measurements, or manually set. Since the flow into the package plant is constant most of the time, the chemical feed rates are manually set for a constant flow rate. Detailed drawings of the coagulant chemical feed system are shown in Figure 3-7 Coagulant Chemical Feed System. The equipment information and design criteria for the chemical feed system are as follows:

Table 3-8. Alum Storage Tanks And Mixer

Mixer Manufacturer:	Mixmor
Model:	D-13
Mounting:	Floor Stand
Mixer Motor HP:	0.33
Motor Speed(rpm):	1750
Motor Power:	115 V, single phase, 60 Hz
Shaft Material:	Stainless Steel
Shaft Length (inches):	36
Number of propellers on Shaft:	2
Propeller Diameter (inches):	4
Liquid Alum Storage Tank Volume(gallons): **Storage Tank Material:**	100 Cross linked polyethylene
Dry Alum Storage Tank Capacity(ft^3): **Tank Material:**	15 Cross linked polyethylene

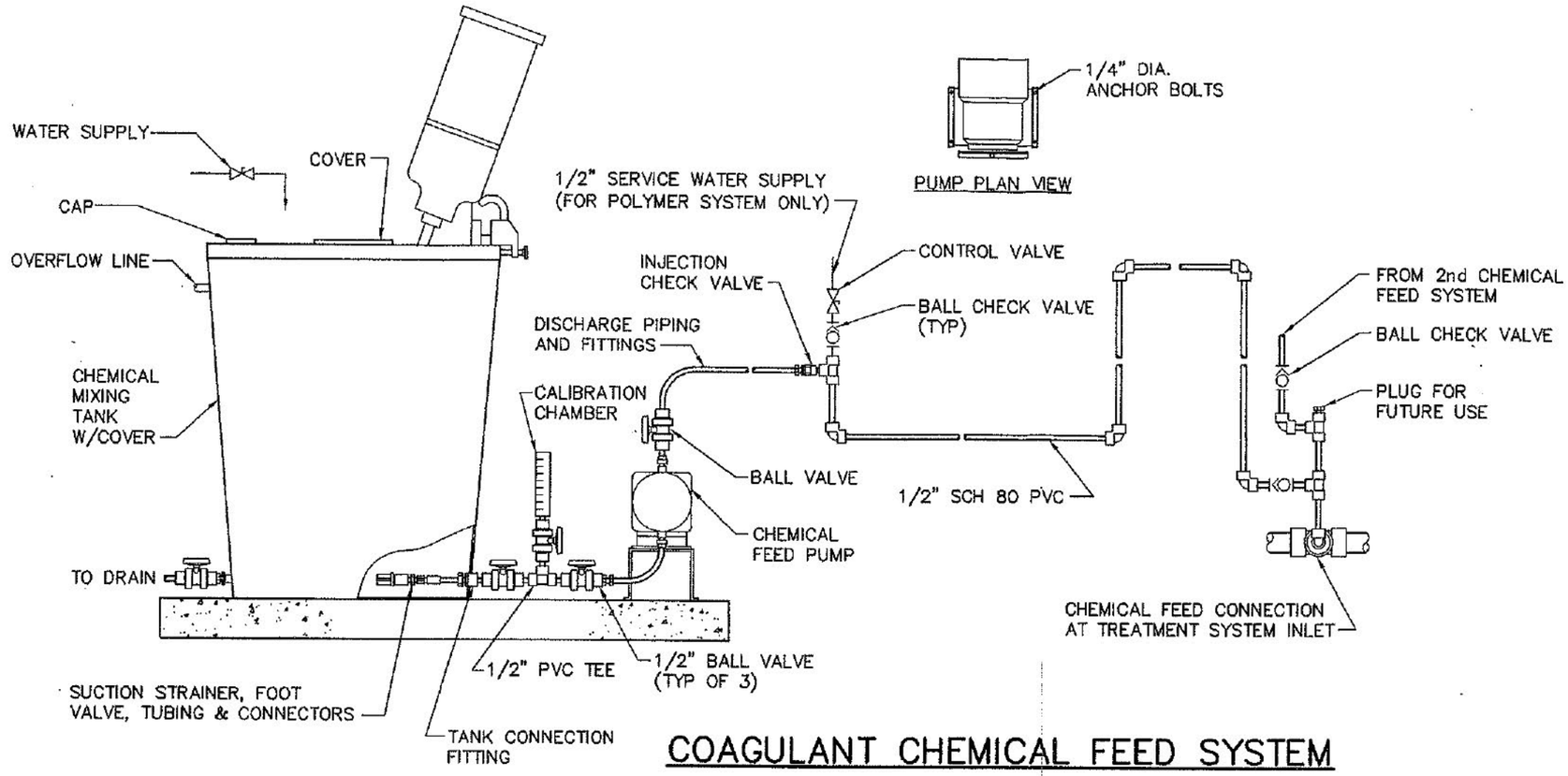

COAGULANT CHEMICAL FEED SYSTEM

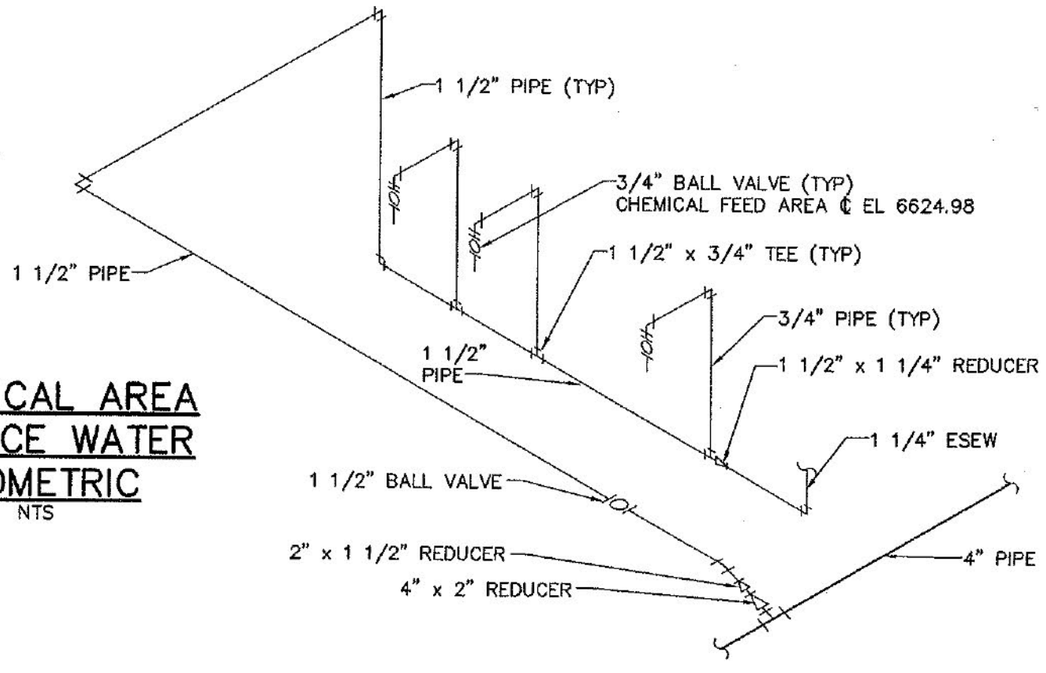

CHEMICAL AREA SERVICE WATER ISOMETRIC

NTS

U:\CADD\9706\OandM\9706OM12.dwg 03/08/99 11:54 am

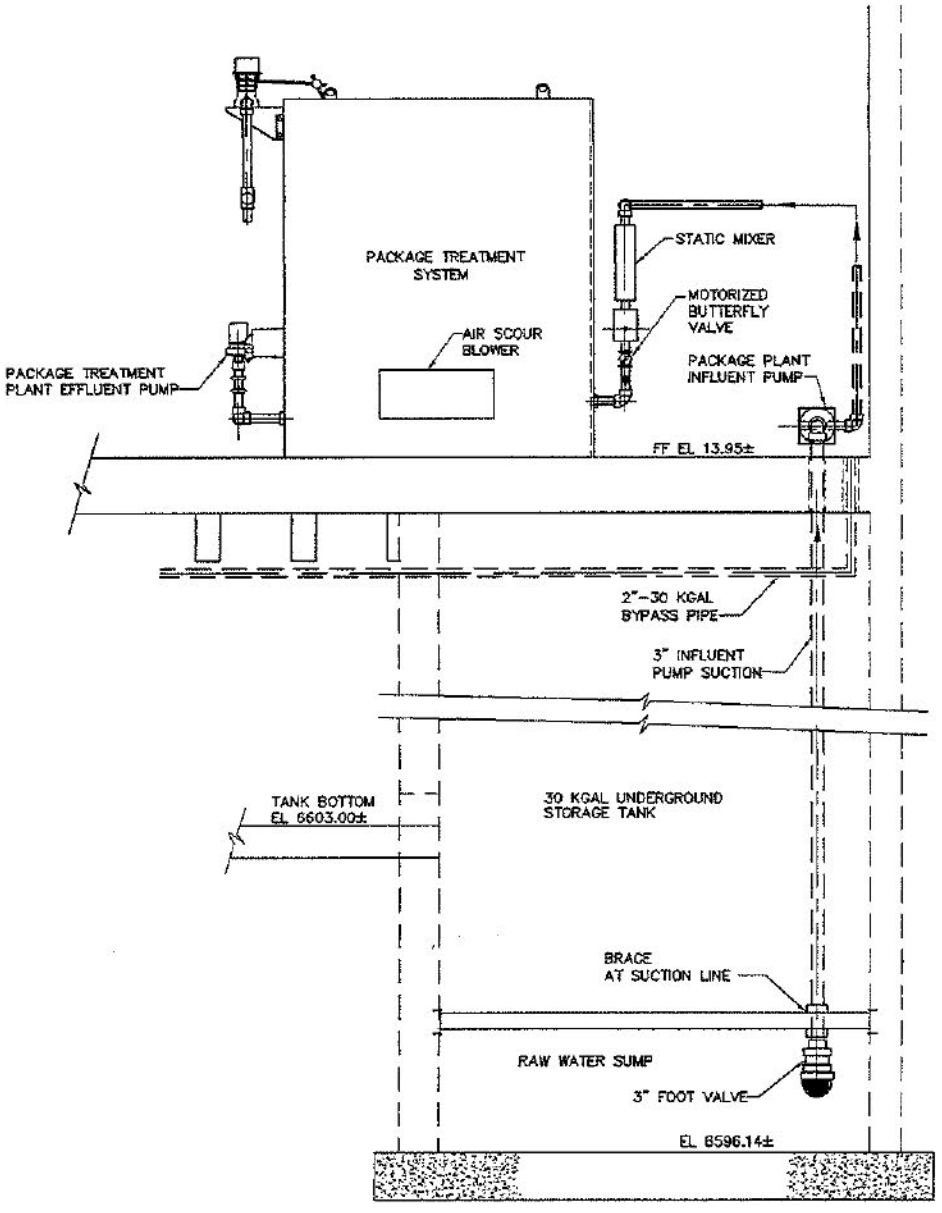

E
3-4

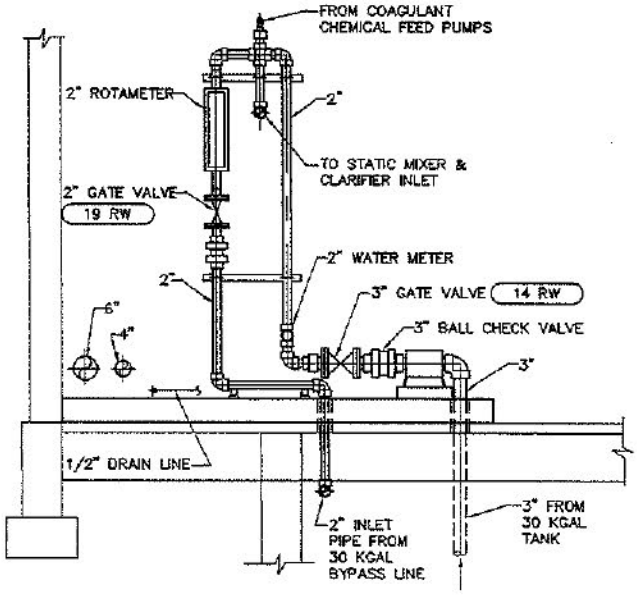

A
3-4
SECTION
NOT TO SCALE

Grand Canyon National Park Airport
Water Supply, Treatment Facility and Deicing System
Operations and Maintenance Manual

PACKAGE PLANT INFLUENT PUMP AND CHEMICAL FEED POINT SECTIONS

Figure No. 3-6

U:\CADD\9706\OandM\97060M17.dwg 03/08/99 1:49 pm

Table 3-9. Chemical Feed Pump for Alum

Design Doses	Min.	Avg.	Max.
Alum (mg/L):	8	20	40
Alum, As 49% Alum Solution @ 85 gpm flow (gpd):	1.6	4	8
Alum, As 12% Alum Solution @ 85 gpm flow (gpd):	6	15	30
Pump Manufacturer:	Milton Roy LMI		
Pump Type:	Electromagnetic, Metering		
Model Number:	B731-71S		
Head Material:	Plexiglass		
Power:	115 V, single phase		
Max. Flow (gpd):	108		
Max. Flow Pressure (psi):	50		
Min. Flow (gpd):	0.5		
Accessories:	Four Function Valve Injection, Anti-siphon Valve Foot Valve and Strainer		

Table 3-10. Polymer Storage Tank And Mixer

Mixer Manufacturer:	Mixmor
Model:	G-14
Mounting:	Floor Stand
Mixer Motor HP :	0.25
Motor Speed(rpm):	420
Motor Power:	115/230 V, single phase, 60 Hz
Shaft Material:	Stainless Steel
Shaft Length (inches):	30
Number of propellers on Shaft:	2
Propeller Diameter (inches):	7
Polymer Storage Tank Volume(gallons): Storage Tank Material:	30 Cross Linked Polyethylene

Table 3-11. Chemical Feed Pump for Polymer Addition

Design Dose	Minimum	Maximum
Polymer Dose (mg/L):	0.25	0.5
0.25% Active Polymer Solution @ 85 gpm (gpd):	12	24
0.5% Active Polymer Solution @ 85 gpm (gpd):	6	12
Pump Manufacturer:	Milton Roy LMI	
Pump Type:	Electromagnetic, Metering	
Model Number:	B121-91S	
Head Material:	Plexiglass	
Power:	115 V, single phase	
Max. Flow (gpd):	60	
Max. Flow Pressure (psi):	100	
Min. Flow (gpd):	0.28	
Accessories:	Four Function Valve Injection, Anti-siphon Valve Foot Valve and Strainer	

3.3.1.4 Auxiliary Package Treatment System Equipment - Package Treatment System Influent Pump

The influent pump draws water from the 30 Kgal underground storage tank and discharges flow past the chemical feed point and into the inlet of the adsorption clarifier. Detailed section drawings of the influent pump area are provided in Figure 3-6. Design characteristics for the influent pump are listed below:

Table 3-12. Package Treatment System Influent Pump

Pump Manufacturer:	Goulds
Pump Model:	3656 1.5x2-8
Pump Type:	Close Coupled Centrifugal Pump Bronze Fitted Single Stage, Closed Impeller
Design Criteria	
Fitting Size (inches):	3
Capacity (gpm):	85
TDH (ft):	35
Motor Size (HP):	1.5
Motor Speed (rpm):	1,750
Motor Power:	115/230 V, 60 Hz, 1-phase
Motor Enclosure:	ODP

3.3.1.5 Auxiliary Package Treatment System Equipment - Package Treatment System Effluent Pump

The mixed media filter effluent pump transfers filtered water to the GAC columns. Design information on this pump is listed below:

Table 3-13. Package Treatment System Effluent Pump

Pump Manufacturer: **Pump Model:**	Goulds 3642 1.25x1.5-5
Pump Type:	Close Coupled Centrifugal Pump Bronze Fitted Single Stage, Closed Impeller
Design Criteria **Fitting Size (inches):** **Capacity (gpm):** **TDH (ft):** **Motor Size (HP):** **Motor Speed (rpm):** **Motor Power:** **Motor Enclosure:**	 3 85 75 3 3,500 230 V, 60Hz, 1-phase ODP

3.3.1.6 Auxiliary Package Treatment System Equipment - Backwash System

Backwash water flow, provided under pressure by the potable distribution system pumps, is used to scour/clean the mixed media filter and clarification media. The backwash system is also connected to the GAC columns.

Control of backwash flow and pressure into the package treatment system and GAC columns is accomplished with a combination flow control and pressure reducing valve (FCV and PRV) (valve tag number, 2 FBW). A back flow preventer (valve tag number 3 FBW) is placed on the backwash line to prevent contamination of the distribution system supply. Backwash flow is directed to a underground storage sump adjacent the water treatment facility, which overflows into a sewer manhole. A detailed section view of the backwash piping is shown in Figure 3-8 Backwash System Piping. Design parameters for the backwash system components are shown in the following tables:

Table 3-14. General Backwash System Design Information

Backwash Volume Required per Wash Cycle:	
Adsorption Clarifier (gal):	600
Mixed Media Filter (gal):	1,350
Additional Information:	
Backwash Rate (gpm/ sq ft):	20
Backwash Duration (min)	15

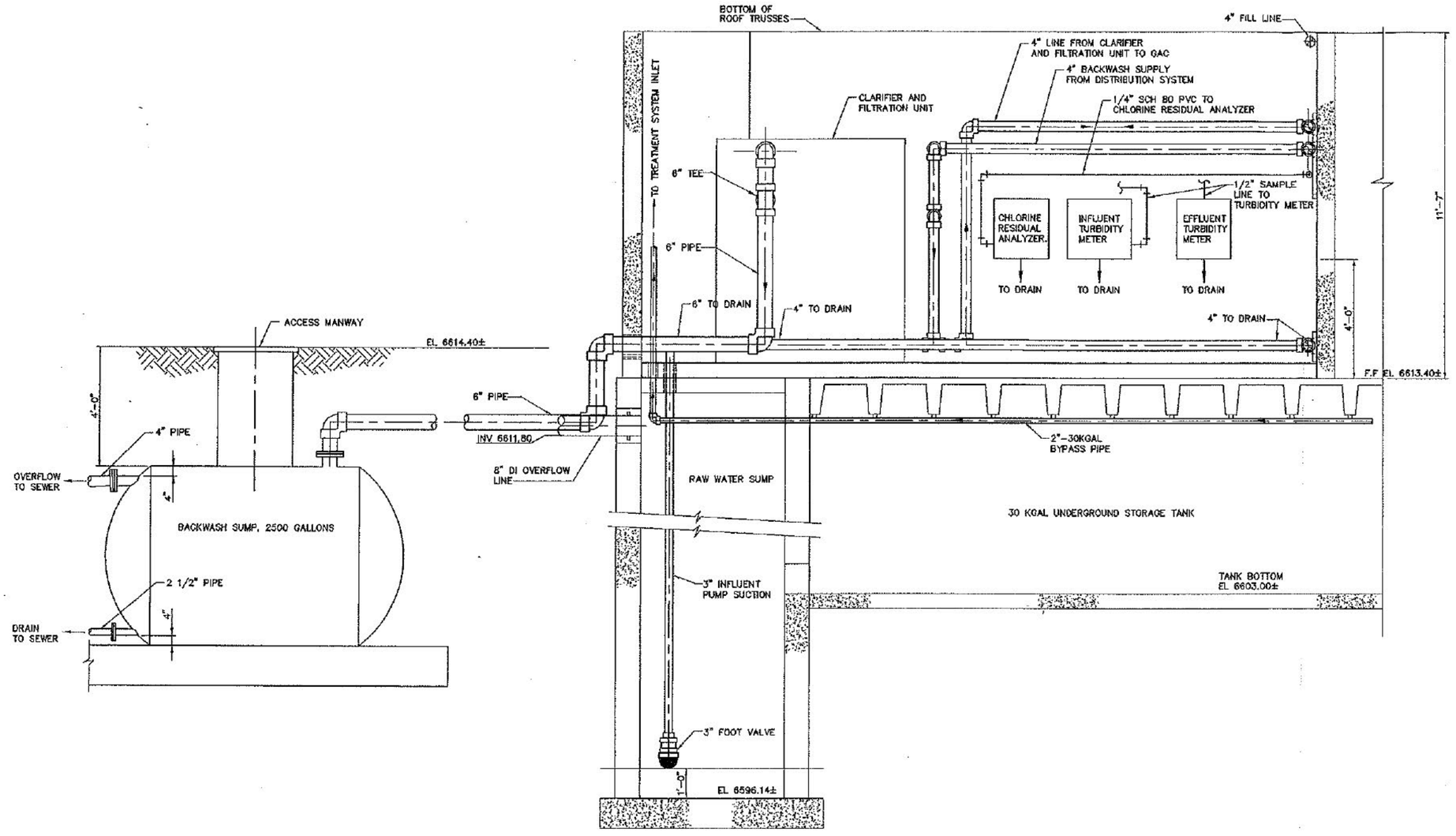

B 3-4 SECTION

Grand Canyon National Park Airport
Water Supply, Treatment Facility and Deicing System
Operations and Maintenance Manual

BACKWASH SYSTEM PIPING

Figure No. 3-8

U:\CADD\9706\OandM\9706OM16.dwg 03/08/99 2:40 pm

Table 3-15. Backwash Pressure/Flow Control

Valve Manufacturer:	CLA-VAL
Valve Tag Number:	2 FBW
Valve Model:	49-01
Valve Type: **Main Valve:** **Main Valve Material:**	Combination FCV and PRV Hytrol 100-01 (Globe) Ductile Iron
Design Information: **Size (inches) and Valve Type:** **Pressure Adjustment Range (psi):** **Max. Continuous Flow (gpm):** **Min. Continuous Flow (gpm):**	 4, Flanged 30-300 800 50
Design Features:	X46A Flow Clean Strainer

Table 3-16. Backwash Backflow Preventer

Valve Manufacturer:	CLA-VAL
Valve Tag Number:	3 FBW
Valve Model:	RP7L
Valve Type: **Materials:** **Relief Valve :** **Main Valve Body:** **Elastomer:** **Internal Check Assembly and Spring:**	Reduced Pressure Backflow Preventer Bronze Ductile Iron Nitrile Stainless Steel, 300 series
Design Information: **Size (inches) and Valve Type:** **Max. Working Pressure (psi):** **Temperature Range (degrees F):**	 4, Flanged 175 32-140

Backwashing of the adsorption clarifier and mixed media filter is supplemented by an air scour system that consists of a regenerative blower. The regenerative blower is integral to the package treatment system clarifier and filter.

Detailed design criteria for the air scour blower are listed in the following table:

Table 3-17. Package Plant Backwash Blower

Blower Manufacturer:	EG&G Rotron
Model:	DRS543E72
Part Number:	037222
Blower Type:	Regenerative
Design Criteria	
Capacity (scfm):	50
Design Pressure (psig):	3.25
Motor Size (HP):	5
Motor Power:	230/460 V, 60 Hz, 3-phase
Motor Enclosure:	ODP
Shaft Material:	Carbon Steel

3.3.2 GAC Absorption Columns

Effluent from the mixed media filter is then treated in Granular Activated Carbon (GAC) columns. GAC column treatment of the filtered water is necessary for the removal of trace levels of chemicals that are not removed by the oil/water separator, adsorption clarifier and filtration such as trihalomethane (THM) precursors.

The GAC columns are upstream of the main disinfection step, so THM and other organohalide formation is minimized. Two GAC tanks are normally operated in series. Parallel operation of the columns is used only to allow bypassing of a column that is taken out of service. The backwash system for the package treatment system has also been connected to the GAC columns to allow GAC media backwashing. Backwash drain piping from the GAC columns is shown in Figure 3-8. Detailed section views of the GAC columns are provided in Figure 3-9 GAC Column Sections. GAC column design information is listed in the following table:

Table 3-18. GAC Column Design Information

Manufacturer:	US Filter - Culligan
Model:	ACS-05496
Service and Design Conditions	
Type of System:	Duplex
Design Service Flowrate (gpm):	155 per vessel
Design Linear Velocity (gpm/ sq ft):	10
System Pressure Drop @ 10 gpm/sq ft (psi):	11
Backwash Flow Rate @ 70 degrees F (gpm/sq ft):	155
Operating Pressure Range (psi):	45-95
Operating Temperature Range (degrees F):	45-105
Maximum Influent Turbidity (NTU):	< 5.0
Maximum Influent Organics (ppm):	0.5 ppm Oxygen Consumed
Maximum Influent Chlorine (ppm as Cl_2):	10
Empty Bed Contact Time at 85 gpm:	
Normal Operation, Two Vessels in Series (min):	14
Temporary Operation, Two Vessels in Parallel (min.):	7

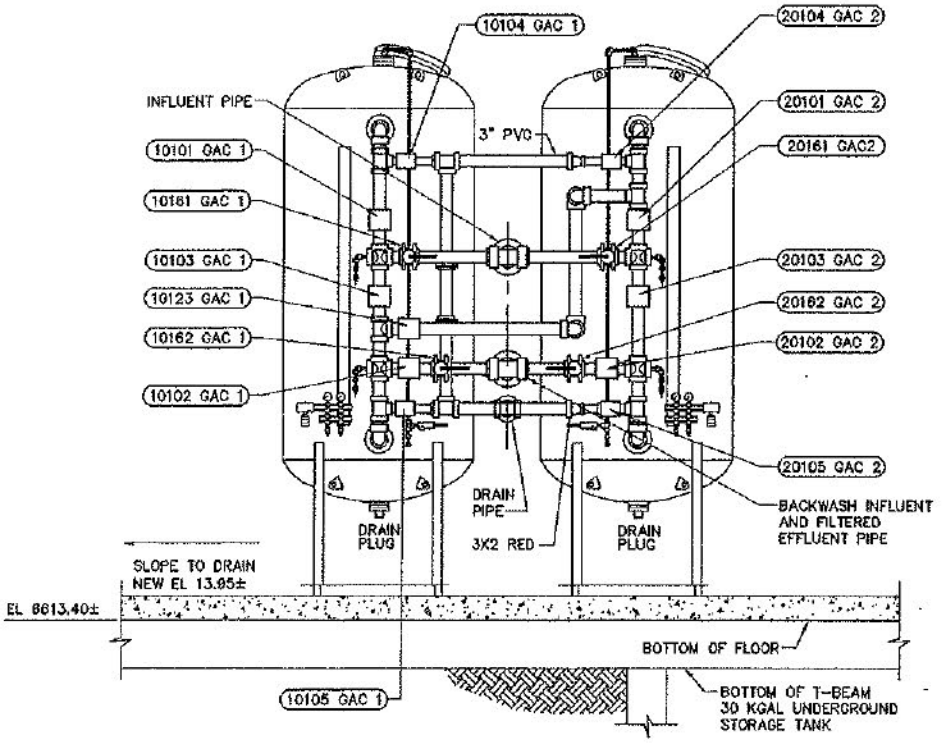

C 3-4 SECTION
NOT TO SCALE

NOTE:
ALL TAGGED VALVES ARE BUTTERFLY VALVES
MOTORIZED VALVES ARE DEPICTED AS SQUARES OR RECTANGLES

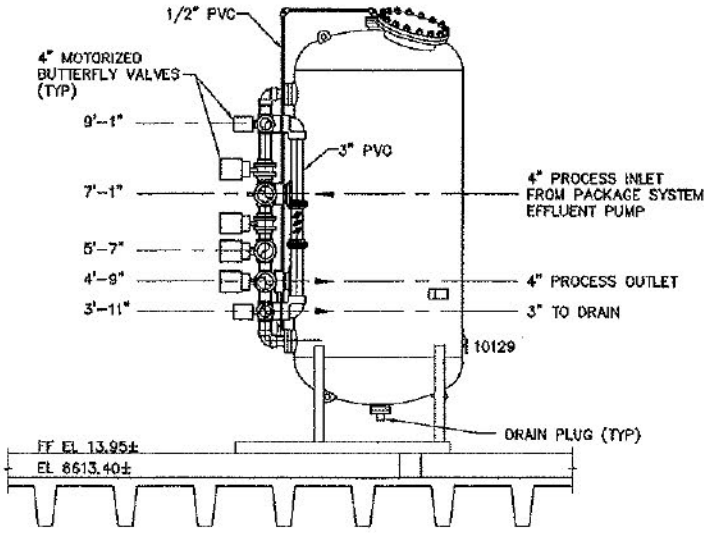

D 3-4 SECTION
NOT TO SCALE

Grand Canyon National Park Airport
Water Supply, Treatment Facility and Deicing System
Operations and Maintenance Manual

GAC COLUMN SECTIONS

Figure No. 3-9

Table 3-18. GAC Column Design Information (cont'd)

Vessel Design	
Number of Vessels:	2
Design Pressure (PSIG):	100
Design Temperature (degrees F):	120
Shell Material:	Carbon Steel
Shell Diameter (in):	54
Man way:	One 18" dia round per vessel
Internal Surface Preparation and Coating:	SSPC-SP 5, white epoxy phenolic
External Surface Preparation and Coating:	SSPC-SP 6, commercial sandblast, safety blue phenolic
Service Valves	
Type:	Butterfly
Body Material:	Cast Iron
Seat Material:	EPDM
Style / Connection:	Wafer
Media	
Activated Carbon Volume per Vessel (cu ft):	78.5, 12x40 Mesh, 230 Molasses No., 1000 mg/g Iodine Number
Graded Quartz Support Media (cu ft):	4
Dimensions	
Vessel:	12 ft High x 11 ft 2 in. Wide x 6 ft 4 in Depth
Inlet/Outlet Pipe Dia. (in):	3

3.4 DISINFECTION

GAC column effluent is disinfected with sodium hypochlorite (NaOCl) and then flows into the 375 Kgal storage tank. To maintain tank chlorine residual level and satisfy CT criteria, treated water held in the 375 Kgal underground storage tank, is continually dosed with hypochlorite and circulated through tank using two recirculation pumps. The recirculation pumps draw water from the North end of the tank compartments. The drawn water is then dosed with hypochlorite solution and returned to the tank via a diffuser system.

Five gallon carboys of 12% sodium hypochlorite solution are utilized for water disinfection at the water treatment facility. The 12% solutions are diluted to a 1% or 5% solution in a hypochlorite solution storage tank located in the chemical feed area.

Detailed drawings of the recirculation pumps and hypochlorite chemical feed points are shown in Figure 3-10 375 Kgal Underground Storage Tank Recirculation Pumps and Hypochlorite Feed. Design criteria for the recirculation pumps are listed in the following table:

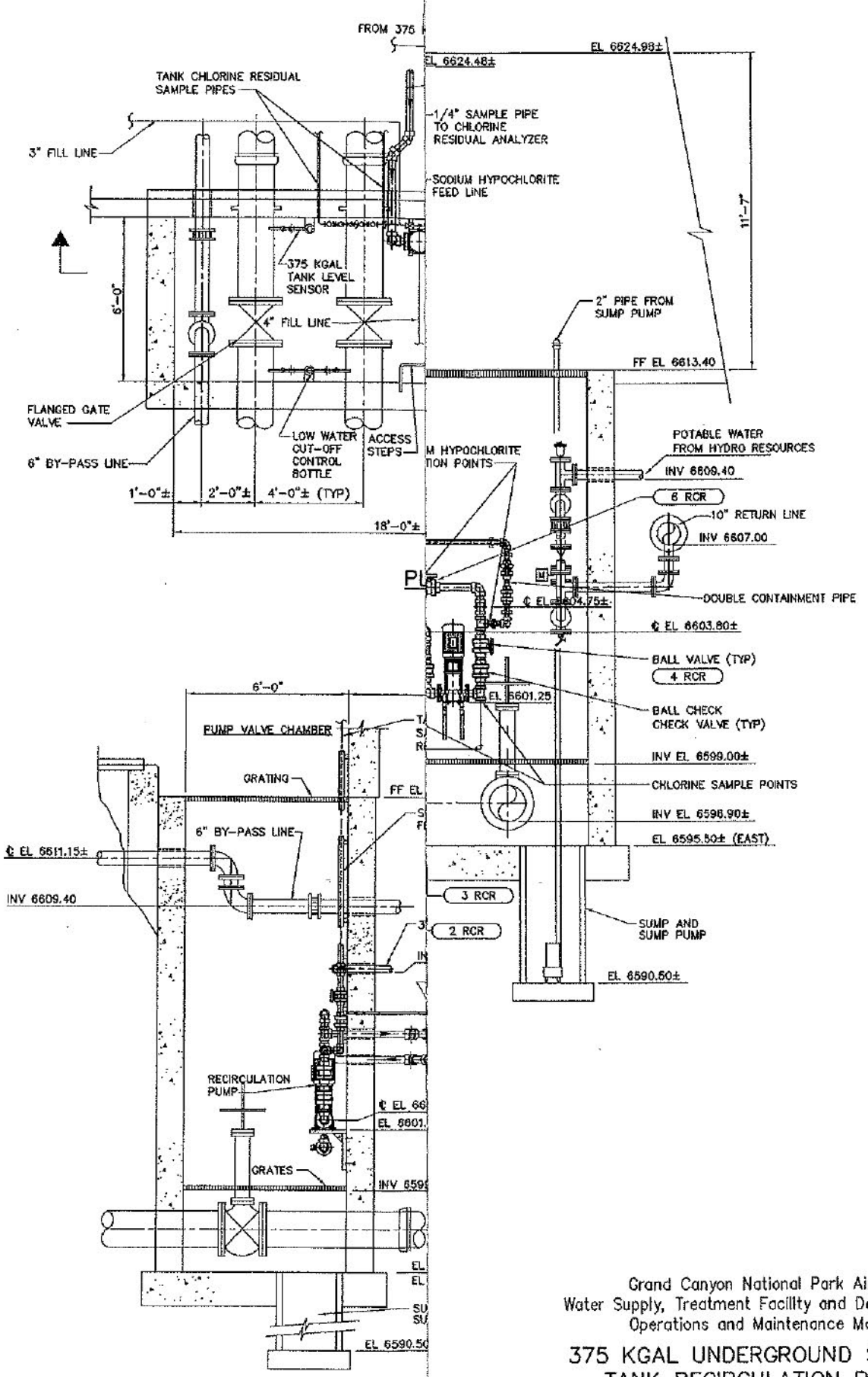

Grand Canyon National Park Airport
Water Supply, Treatment Facility and Deicing System
Operations and Maintenance Manual

375 KGAL UNDERGROUND STORAGE TANK RECIRCULATION PUMPS AND HYPOCHLORITE FEED

Figure No. 3-10

Table 3-19. 375 Kgal Underground Storage Tank Recirculation Pump (Typical of 2)

Pump Manufacturer:	Aurora
Pump Model:	382 A
Pump Type and Materials:	Close Coupled Centrifugal Pump Bronze Impeller, Case Ring, Impeller Ring Cast Iron Case Stainless Steel Shaft
Lubrication:	Grease
Stuffing Box:	Mechanical Seal, John Crane Type 21
Design Criteria	
Fitting Size (inches):	3, Flanged
Capacity (gpm):	175
TDH (ft):	45
Motor Size (HP):	3
Motor Speed (rpm):	3600
Motor Power:	460 V, 3 phase, 60 hertz
Motor Enclosure:	TEFC
Motor Frame:	182JM

Potable water service piping is provided to the chemical area to allow dilution of the sodium hypochlorite and other chemical solutions. An isometric and typical chemical feed system arrangement is provided in Figure 3-7. Design information on the sodium hypochlorite feed system and feed system component information are included in the following tables:

Table 3-20. Disinfection Design Parameters

Disinfection Stock Chemical Solution: **Disinfection Feed Chemical Solution:** **25 day storage for Stock Solutions**	12% Sodium Hypochlorite 1% or 5% Sodium Hypochlorite		
	Min.	Avg.	Max.
Overall Dose Rate to GAC Effluent and 375 Kgal Tank feed Points (mg/L as Cl_2):		2.0	3.0
Operating Free Chlorine Residual in 375 Kgal Tank (mg/L as Cl_2):	0.4	0.7	1.0
CT (mg/L x min.):		79	

Table 3-21. Sodium Hypochlorite Storage Tanks And Mixer

Mixer Manufacturer:	Mixmor
Model:	D-13
Mounting:	Floor Stand
Mixer Motor HP :	0.33
Motor Speed(rpm):	1750
Motor Power:	115/230 V, single phase, 60 Hz
Shaft Material:	Stainless Steel
Shaft Diameter (in):	0.625
Shaft Length (inches):	36
Number of propellers on Shaft:	2
Propeller Diameter (inches):	4
Hypochlorite Feed Storage Tank Volume(gallons): **Storage Tank Material:**	100 Cross linked polyethylene

Table 3-22. Chemical Feed Pumps for Sodium Hypochlorite Addition

Design Doses	**Min.**	**Avg.**	**Max.**
Overall Chlorine Dose Required for GAC Effluent and 375 Kgal Tank Feed Points (mg/L as Cl_2):		2.0	3.0
1 % Hypochlorite Solution Required @ 85 gpm (gpd):		24.5	36.8
5 % Hypochlorite Solution Required @ 85 gpm (gpd):		4.9	7.3
Pump Manufacturer:	Milton Roy LMI		
Location:	Figure 3-4, Tag 25		
Number of Pumps:	Two		
Pump Type:	Electromagnetic, Metering		
Model Number:	A761-61S		
Head Material:	Plexiglass		
Power:	115 V, single phase		
Max. Flow (gpd):	48		
Max. Flow Pressure (psi):	50		
Min. Flow (gpd):	0.48		
Accessories:	Four function valve Injection, Anti-siphon valve Foot Valve and Strainer		

3.5 CHEMICAL STORAGE AREAS

Two 60 gallon capacity acid storage cabinets are located in the water treatment facility laboratory to store corrosive process chemicals such as stock 12% Sodium Hypochlorite solutions, dry polymer, and dry alum. Cabinets are made of stainless steel and if left open will automatically close at ambient temperatures above 165 degrees F due to a fusible link. Cabinet trays are made of corrosion resistant polyproplylene.

3.6 WATER QUALITY MONITORING

There are several key parameters that are monitored continually to either control the treatment process or assess the treatment system performance. Several different types of equipment and meters will be required for measurement of these parameters, and are discussed in the following sections.

3.6.1 BTEX/PAH Monitoring System

A BTEX/PAH monitoring system continually monitors the raw water pumped from the catchment basin area to ensure the water has low BTEX/PAH concentrations (below 5 ppm). A detailed view of the analyzer is provided in Figure 3-11 BTEX Analyzer Details. The design information for the BTEX/PAH monitoring system is as follows:

Table 3-23. BTEX/PAH Analyzer Information

Manufacturer:	Turner Designs
Number of Analyzers:	One
Model and Serial Number (s/n):	TD-4100 s/n 41-0241-CE
Analyzer Type:	Fluorimeter
Enclosure:	Plasti-Fab Fiberglass 5' x 5' Enclosure
Air Compressor for Instrument Air:	Thomas Compressor Model 627FE44
Heater for Analyzer Enclosure:	Marely, MFA T2 Series Model B
Optical Configuration:	Mixed Fuel (Gas, Jet, Diesel)
Calibration Solution:	Tap water with 10 ppm aviation gas
Range (ppm):	0.001 to greater than 10,000
Response Time for Analysis (sec):	10
Resolution (ppb):	1
Minimum Detection (ppb):	1
Sample Flow Required (gpm):	0.5-2.0
Alarms:	Early Alarm: 5 ppm as aviation gas High Alarm: 10,000 ppm as aviation gas Baseline Alarm Alarm Time Delay: 1 minute

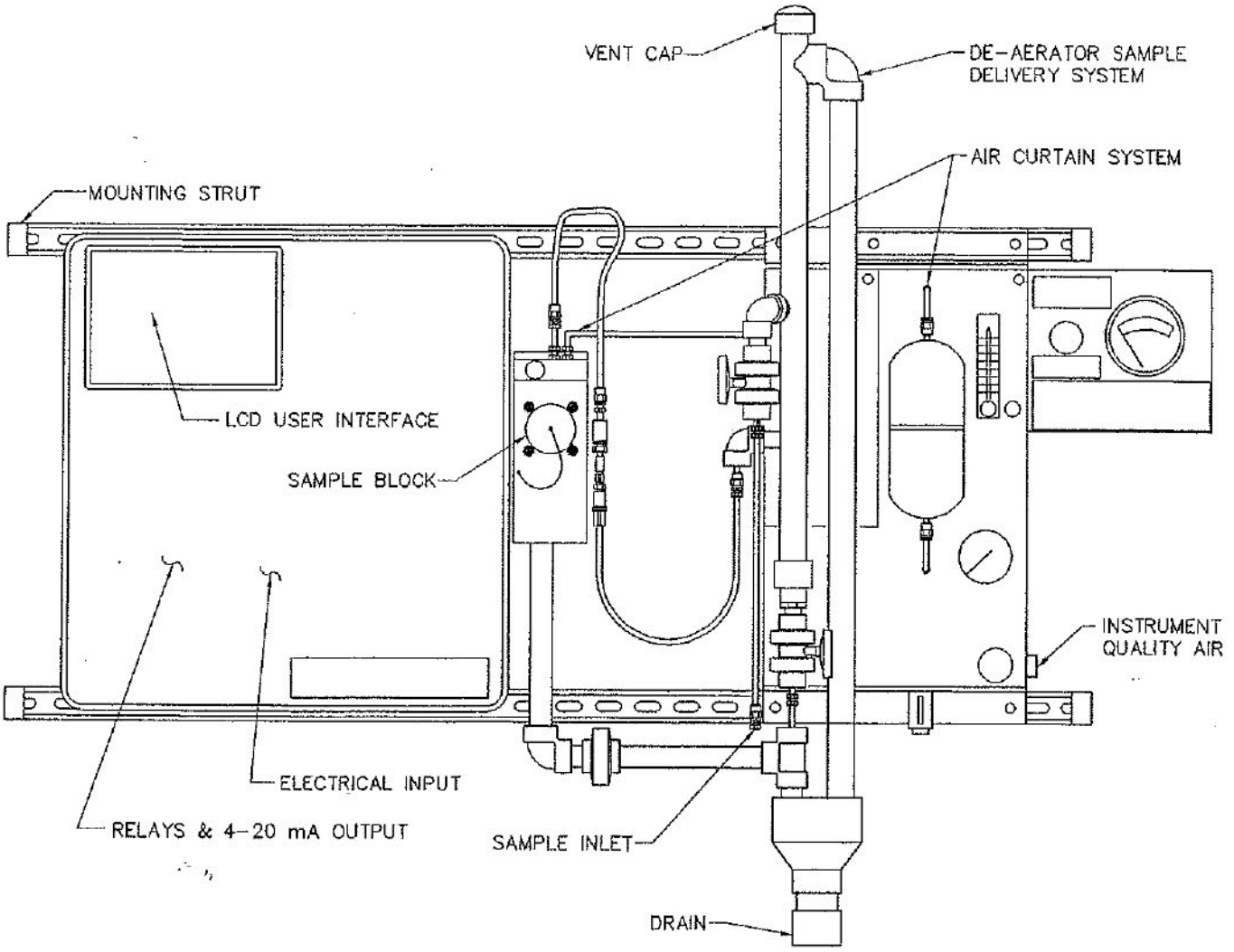

Grand Canyon National Park Airport
Water Supply, Treatment Facility and Deicing System
Operations and Maintenance Manual

BTEX ANALYZER DETAILS

Figure No. 3-11

U:\CADD\9706\OandM\97060M27.dwg 03/08/99 1:33 pm

3.6.2 Turbidity Meters

Two turbidity meters are installed at the water treatment facility. One meter is used to measure the GAC effluent turbidity to ensure that effluent turbidity level is within State regulations and to initiate the adsorption clarifier and mix media filter backwash cycle. Sampling locations for the meters is shown on the water treatment schematic, Figure 3-5. A chart recorder is provided to record effluent turbidity measurements over the State specified period of time to insure that State regulations are met and for historical data collection.

Another meter is used to monitor the turbidity readings of the raw water entering the adsorption clarifier. Readings from the influent turbidity meter are used to automatically adjust coagulant doses based on turbidity fluctuations recorded. The design criteria for the turbidity meters and recorder are as follows:

Table 3-24. Turbidity Meter Design Information

Manufacturer:	Great Lakes Instruments
Number of Analyzers:	Two
Turbidity Meter Model:	95T/8220
Strip Chart Recorder Model:	280
Measurement Method:	4 beam ratiometric method
Range (NTU):	0.01 to 100
Accuracy	±2% of reading, all ranges
Resolution (NTU)	0.01
Minimum Detection (NTU)	0.01
Sample Inlet Pressure Allowable Range (psi):	1-50
Sample Flow Required (gpm):	0.05 to 7
Alarms:	Two programmable concentration alarms High High Alarm Set Point (0.45 NTU recommended) High Alarm Set Point (0.35 NTU recommended) Diagnostic Alarm
Key Spare Parts:	Detector Light Source p/n 8220-1320-104 Detector p/n 8220-1330-104

3.6.3 Chlorine Residual Analyzers

A chlorine residual analyzer is used to continuously monitor free chlorine in the recirculation loop system in order to manually control the sodium hypochlorite tank feed rate. A second chlorine residual analyzer is used to monitor the free chlorine residual in the backwash water entering the water treatment facility. Specific locations of the sampling points are displayed in Figure 3-5. The design criteria and product information for chlorine residual analyzers are as follows:

Table 3-25. Chlorine Analyzer Design Information

Manufacturer:	Hach
Number of Analyzers:	Two
Model:	CL17
Type:	DPD Colorimetric
Analysis Cycle:	2.5 minutes
Range (mg/L as free chlorine):	0-5
Accuracy:	Better than ±5% of reading or ±0.05 mg/L whichever is greater.
Resolution (mg/L as free chlorine):	0.01
Minimum Detection (mg/L as free chlorine):	0.05
Sample Inlet Pressure Allowable Range (psi):	1-20
Sample Flow Required (mL/min):	100-500
Alarms:	Two programmable concentration alarms: High Alarm: 2.0 mg/L recommended Low Alarm: 0.3 mg/L recommended System Warning Alarm System Shut Down Alarm
Replenishment Chemicals and Maintenance Items:	
Free Chlorine Indicator, Hach Cat. No. 23140-11 **Free Chlorine Buffer, Hach Cat. No. 23141-00** **Reagent Set (Buffer and Indicator), Chlorine Free CL17, Hach Cat. No. 25569-00**	

3.6.4 Analyzer Calibration

Analyzers shall be calibrated at regular intervals as specified in the equipment manufacturer O&M Manuals (see Section 8.6) provided for each analyzer. Records of the calibration work shall be recorded as described in Sections 7.3.2 and 8.2.

4 DESCRIPTION OF DISTRIBUTION SYSTEM

The airport potable water distribution system pump station is located northern-end of the terminal building, between the terminal and the 375 Kgal underground storage tank and adjacent to the water treatment facility room. The storage tank is divided into two compartments of equal volume. A plan view of the pump station is shown in Figure 3-3. The distribution pumps draw potable, disinfected water from the 375 Kgal underground water storage tank to supply potable water for airport domestic and fire protection needs. The airport potable water distribution pump station building includes:

1. A pump room which houses a 5,000 gallon hydro-pneumatic tank to stabilize the potable water distribution system pressure and two pairs of pumps. The pump characteristics are shown in Table 4-1 and Table 4-2. Two pumps are used provide adequate system pressure for domestic potable water use and the other two pumps provide adequate system pressure to maintain fire flows for the airport fire hydrant and sprinkler systems.

2. A fire alarm control room.

3. A generator room.

4. A storage room.

5. An electric gear room.

6. A laboratory room.

At any one time pump A and/or pump B maybe in operation. The pumps are operated alternately to balance pump wear. In the event the alternate pump fails to start on a designated cycle, the initial pump shall be restarted and operated until both pumps are operational. The start-stop operation for pump A and pump B is controlled by the hydro pneumatic liquid water level which is measured by electrodes. A selected pump will be started when the start-up level electrodes detect a water level of 19.5 inches (75 psi) measured from the bottom of the hydro pneumatic tank. Pump operation shall be halted when the shut-down level electrodes detect a water level of 30 inches (85 psi) measured from the bottom of the hydro pneumatic tank.

Pump A and pump B are automatically shut-off at a preset low water level elevation monitored by a level sensor in the 375 Kgal underground storage tank. The low water elevation is detected by using an electrode installed in the cut-off control bottle located in the distribution pump valve chamber adjacent to the pumps. Please see the Water Distribution Pump Station O&M Manual written by Grainger Consultants for further details of pump operation.

Table 4-1. Domestic Service Pumps (Pump A and Pump B) Design Characteristics

Pump Manufacturer:	Not Available			
Pump Model:	Not Available			
Pump Type and Materials:	Vertical Turbine, Materials Not Available			
Lubrication:	Not Available			
Stuffing Box:	Not Available			
Design Points	Shutoff	Design Point 1	Design Point 2	Design Point 3
Capacity(gpm):	0	180	250	280
TDH (ft):	272	208	168	152
Discharge Fitting Size (inches):	4, Flanged			
Motor Size (HP):	20			
Motor Speed (rpm):	3,550			
Motor Power:	460 V 3-phase			
Motor Enclosure:	Not Available			
Motor Frame:	Not Available			

Table 4-2. Domestic Service Pumps (Pump C and Pump D) Design Characteristics

Pump Manufacturer:	Not Available			
Pump Model:	Not Available			
Pump Type and Materials:	Vertical Turbine, Materials Not Available			
Lubrication:	Not Available			
Stuffing Box:	Not Available			
Design Points	Shutoff	Design Point 1	Design Point 2	Design Point 3
Capacity(gpm):	0	1,500	2,000	2,400
TDH (ft):	280	212	185	150
Discharge Fitting Size (inches):	10, Flanged			
Motor Size (HP):	150			
Motor Speed (rpm):	3,550			
Motor Power:	460 V 3-phase			
Motor Enclosure:	Not Available			
Motor Frame:	Not Available			

At any one time, only fire pump C or fire pump D will be in operation. As with pump A and pump B, pump C and D will be alternately operated to balance wear. Start-stop operation for pump C and pump D is controlled by pressure switches mounted on the discharge piping manifold. A pump will start on a falling system pressure of 65 psi and pump operation will stop at a rising system pressure of 93 psi.

5 DETAILED OPERATION AND CONTROLS

5.1 INSTRUMENTATION AND CONTROL EQUIPMENT

The process and instrumentation diagrams (P&IDs) of the raw water storage and water treatment facilities at the Grand Canyon National Park Airport are provided in Figure 5-1 Catchment Basin and Uphill Storage Tanks P&ID and Figure 5-2 Treatment System P&ID. Section 5.1.1 describes the details and locations of the control/alarm and circuit breaker panels.

5.1.1 Control Panel Descriptions and Locations

The raw water storage and water treatment facilities instrumentation and equipment is connected to two main control panels. In addition selected equipment is controllable from local control panels.

The two main control panels are:

1. **Water System Control Panel (WS Panel)** - The WS Panel is installed in the Central Alarm Room located within the Distribution System Pump Station building. Alarms reported on the packaged treatment system control panel (PTS) are relayed to the WS control panel. A Programmable Logic Controller (PLC) is installed at the WS Panel. The PLC provides flexibility in operation and is easy to reprogram and operate. All other raw water storage and water treatment system control panels (except for the deicing system and oil/water separator control panels) are tied into the WS panel.

2. **Packaged Treatment System Control Panel (PTS Panel)** - The PTS Panel is dedicated to the treatment facility equipment exclusively and is supplied as part of the package treatment system (adsorption clarifier and mixed media filter). The GAC control panel, influent and effluent package system pumps, and package system influent turbidity meter are tied into the PTS panel. The PTS panel is tied into the WS panel.

Control panel locations are listed in Table 5-1. The deicing system and oil/water separator local control panels are not connected to the WS control panel or to the PTS control panel. Circuit breaker panel locations are provided in Table 5-2. Figures showing panel locations are provided in Figure 5-3 Catchment Area Pump Station Control Panels, Figure 5-4 Uphill Storage Tanks Control and Circuit Breaker Panel Locations, Figure 5-5 Water Treatment System Control and Circuit Breaker Panel Locations, Figure 5-6 Deicing System-Collection Storage and Disposal Control Panel Location and Figure 5-7 Deicing System-Collection Storage and Disposal Panel DP Location. Listed in Table 5-3 are equipment and alarms that are associated with each control panel.

Alarms are employed throughout the WS and PTS control systems to inform operators of critical system conditions. Audible and/or visual alarms are used, depending on the severity of the alarm condition. In cases where the alarm is not critical or the operators can do little to address the alarm condition (such as at the LOW-LOW level alarm at the uphill storage tanks, which signals that the tanks are empty), the alarm is visual. In cases where the alarm is of a critical nature, such as when

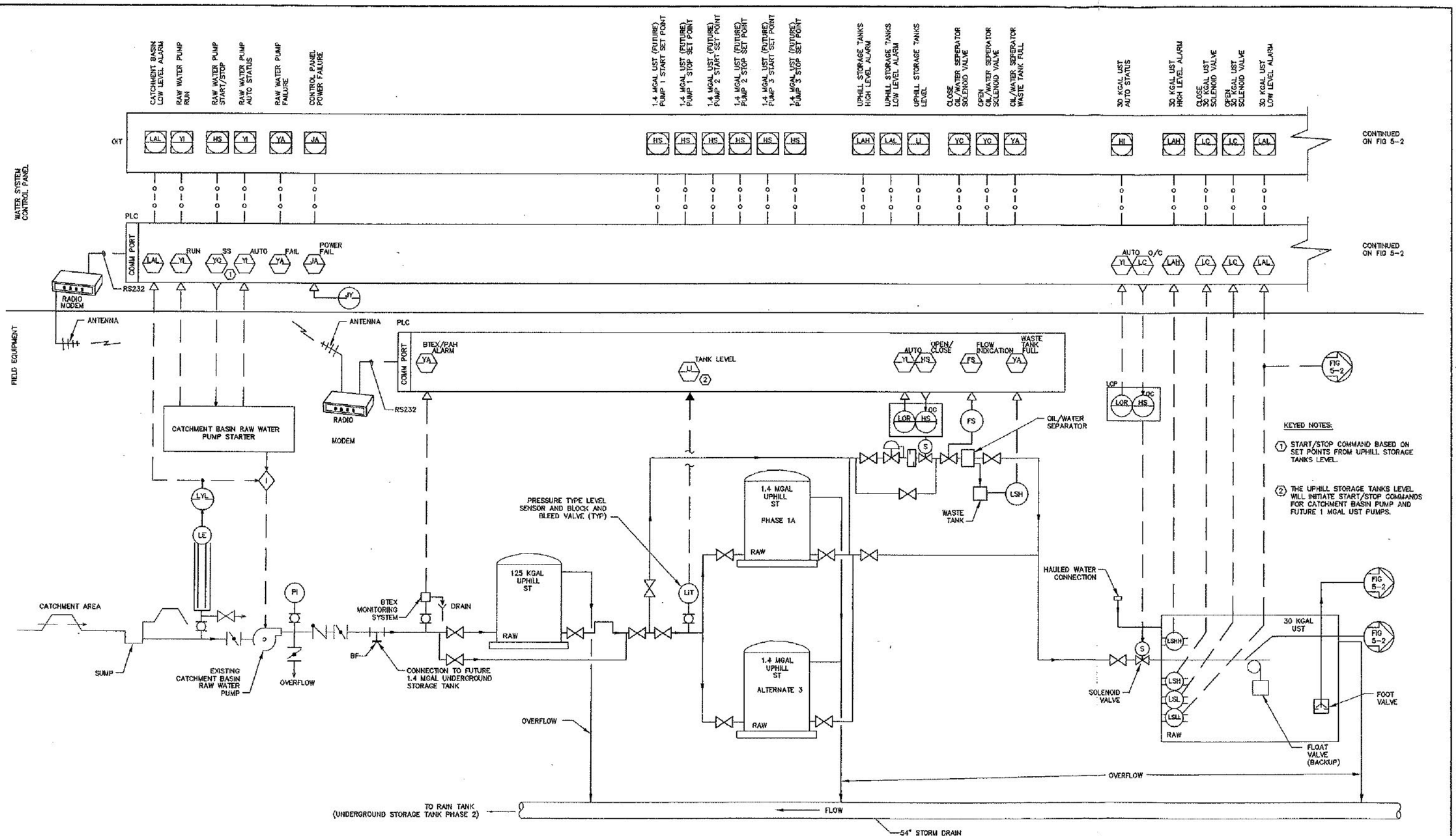

Grand Canyon National Park Airport
Water Supply, Treatment Facility and Deicing System
Operations and Maintenance Manual

CATCHMENT BASIN
AND STORAGE TANKS
P & ID
Figure No. 5-1

U:\CADD\9706\OandM\97060M20.dwg 03/08/99 2:12 pm

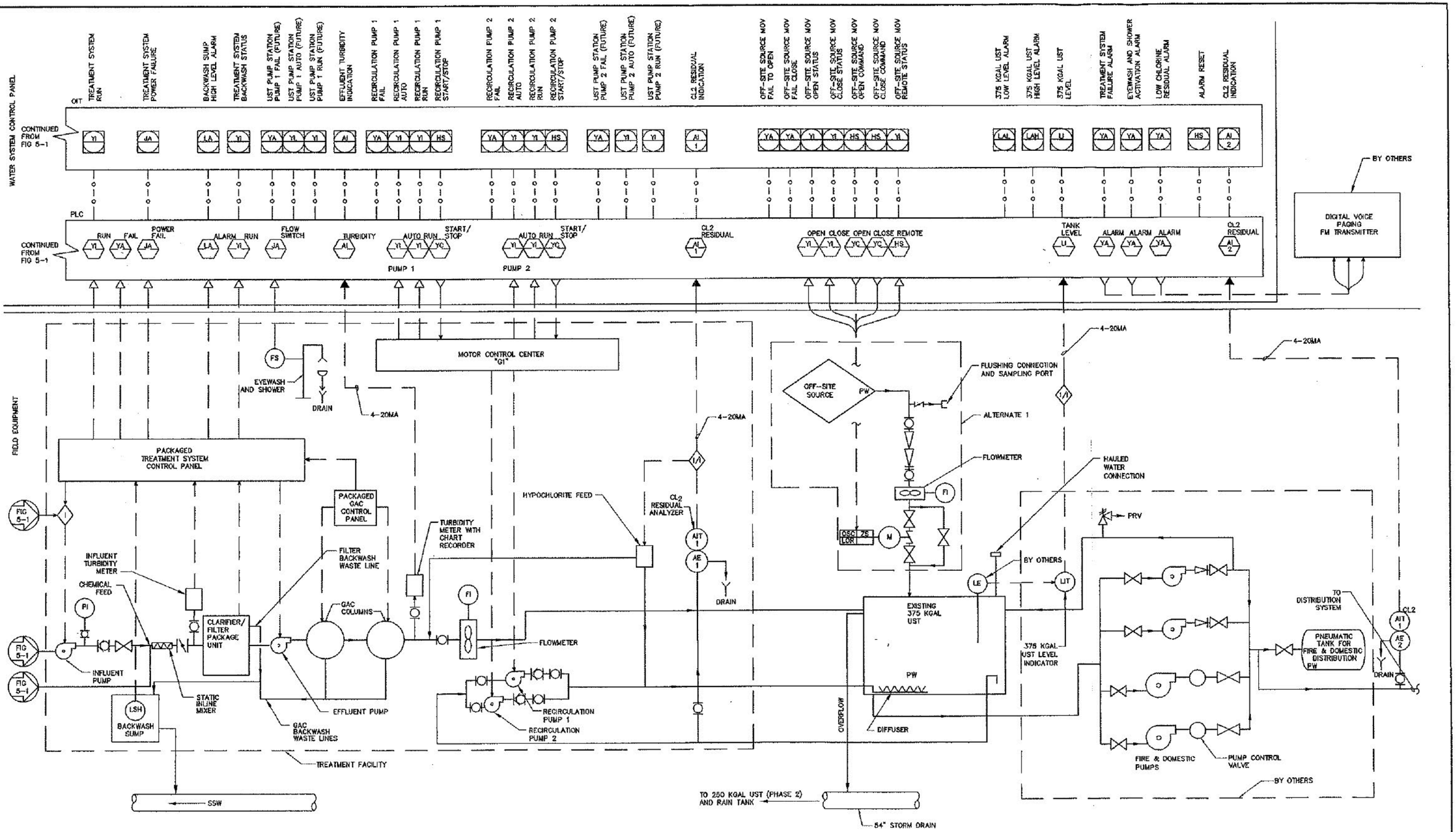

Grand Canyon National Park Airport
Water Supply, Treatment Facility and Deicing System
Operations and Maintenance Manual

TREATMENT SYSTEM P & ID

Figure No. 5-2

U:\CADD\9706\OandM\9706OM21.dwg 03/08/99 2:01 pm

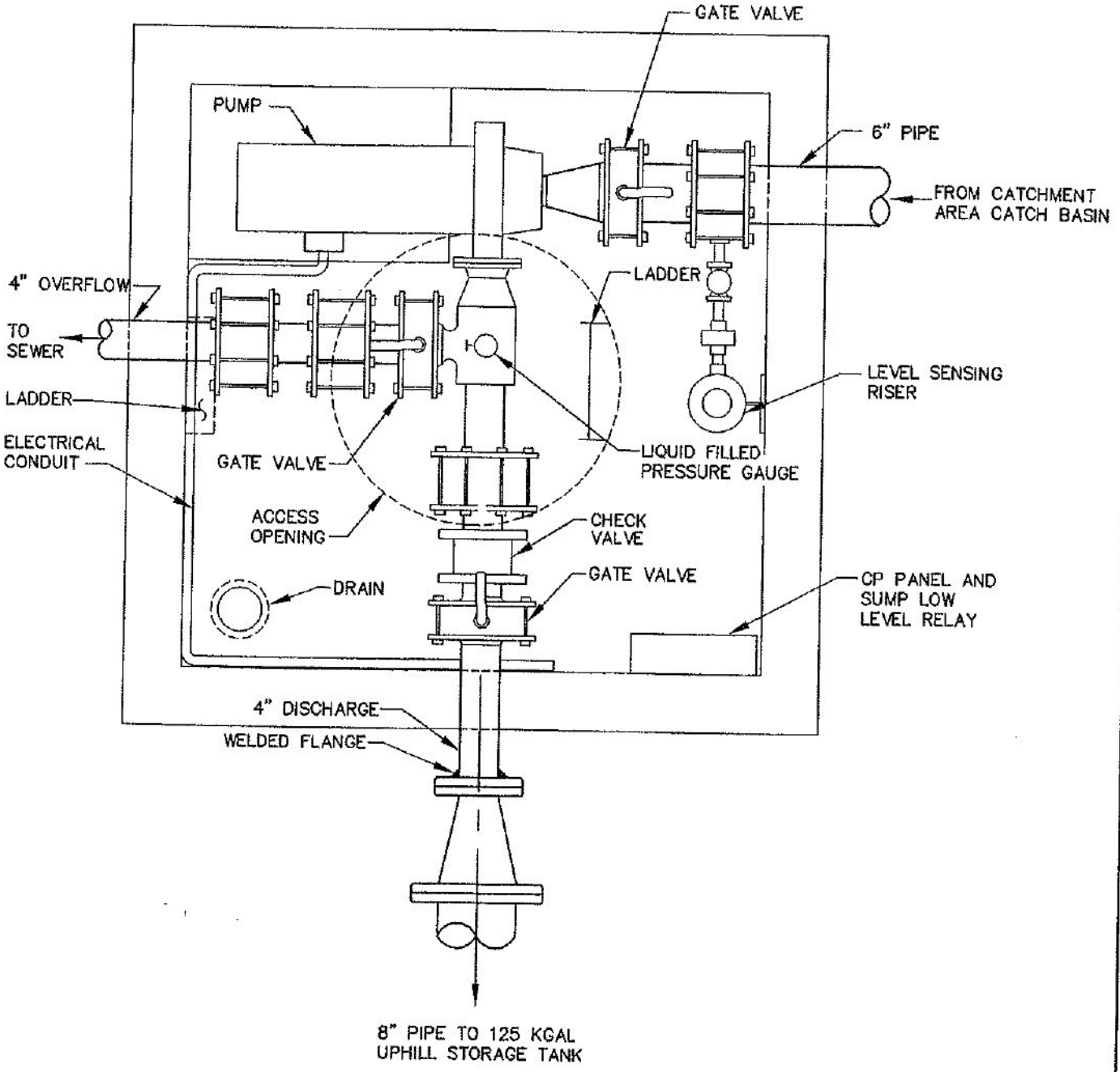

Grand Canyon National Park Airport
Water Supply, Treatment Facility and Deicing System
Operations and Maintenance Manual

CATCHMENT AREA PUMP STATION
CONTROL PANELS

Figure No. 5-3

U:\CADD\9706\OandM\9706OM30.dwg 03/08/99 1:00 pm

VALVE VAULT NO 5

VALVE VAULT NO 8

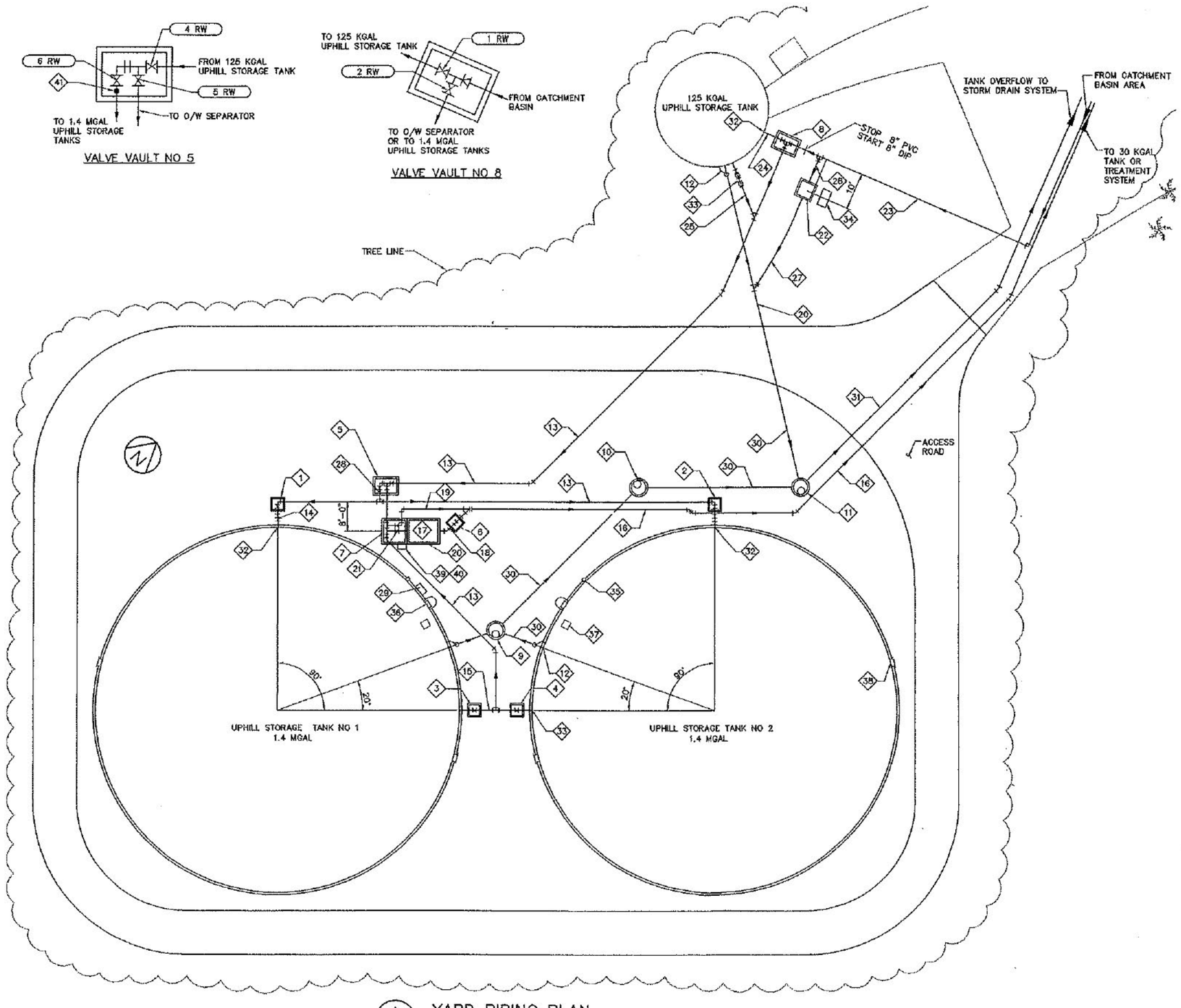

A – YARD PIPING PLAN

0 15 30 60
SCALE IN FEET

KEY NOTES

1. VALVE VAULT NO 1, VALVE (11 RW)
2. VALVE VAULT NO 2, VALVE (12 RW)
3. VALVE VAULT NO 3, VALVE (9 RW)
4. VALVE VAULT NO 4, VALVE (10 RW)
5. VALVE VAULT NO 5, VALVES (4 RW), (5 RW), (6 RW)
6. VALVE VAULT NO 6, VALVE (13 RW)
7. VALVE VAULT NO 7, VALVES (7 RW), (8 RW)
8. VALVE VAULT NO 8, VALVES (1 RW), (2 RW)
9. STORM DRAIN CATCH BASIN NO 1
10. STORM DRAIN CATCH BASIN NO 2
11. STORM DRAIN CATCH BASIN NO 3
12. TANK OVERFLOW/DRAIN (TYP OF 3)
13. 4" RAW WATER
14. 4" RAW WATER INLET LINE
15. 4" RAW WATER OUTLET LINE
16. 6" RAW WATER PIPE
17. OIL/WATER SEPARATOR
18. 4" OIL/WATER SEPARATOR EFFLUENT PIPE
19. 4" OIL/WATER SEPARATOR BYPASS PIPE
20. OIL/WATER SEPARATOR EQUIPMENT BASE
21. OIL/WATER SEPARATOR INLET VALVES AND CONTROLS
22. BTEX/PAH MONITORING SYSTEM
23. 8" RAW WATER FORCE MAIN
24. 4" TANK INLET PIPE
25. 4" TANK OUTLET PIPE
26. 1/2" SAMPLE PIPE
27. 2" DRAIN PIPE
28. TANK LEVEL TRANSMITTER
29. UPHILL STORAGE TANK RTU AND ANTENNA
30. 4" OVERFLOW PIPE
31. 6" OVERFLOW LINE TO STORM DRAIN
32. TANK INLET (TYP OF 3)
33. TANK OUTLET (TYP OF 2)
34. PANEL UHST
35. WATER LEVEL INDICATOR (TYP OF 2)
36. LADDER WITH SAFETY CAGE (TYP OF 2)
37. ROOF HATCH (TYP OF 2)
38. ACCESS MANWAY (TYP OF 4)
39. O/W SEPARATOR SOLENOID VALVE LOCAL CONTROL PANEL
40. O/W SEPARATOR SLUDGE PUMP LOCAL CONTROL PANEL
41. UPHILL STORAGE TANKS LEVEL SENSOR

Grand Canyon National Park Airport
Water Supply, Treatment Facility and Deicing System
Operations and Maintenance Manual

UPHILL STORAGE TANKS CONTROL AND CIRCUIT PANEL LOCATIONS
Figure No. 5-4

U:\CADD\9706\OandM\97060M31.dwg 03/08/99 2:02 pm

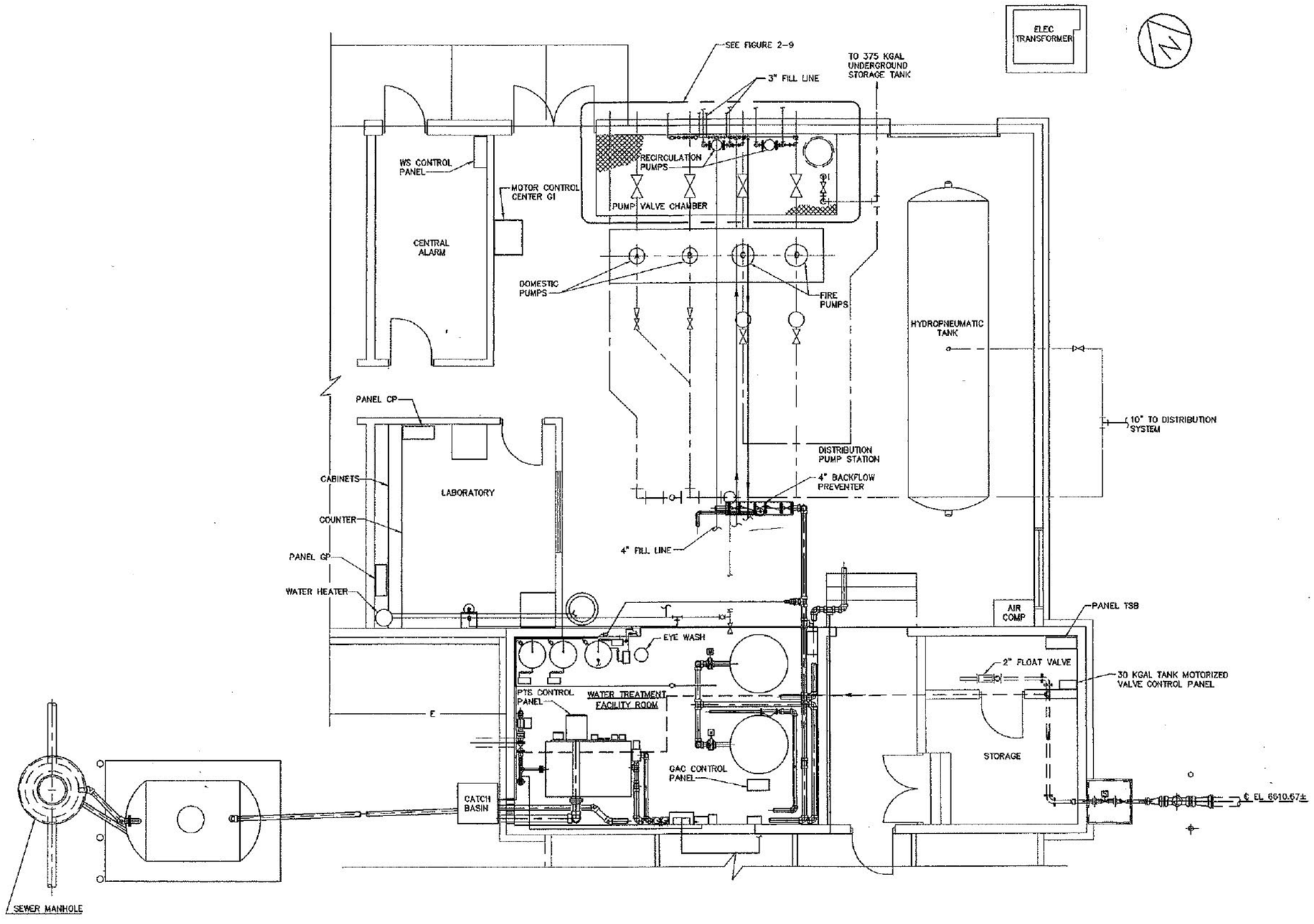

PLAN

0 2 4 8

SCALE IN FEET

Grand Canyon National Park Airport
Water Supply, Treatment Facility and Deicing System
Operations and Maintenance Manual

WATER TREATMENT SYSTEM
CONTROL AND CIRCUIT BREAKER
PANEL LOCATIONS
Figure No. 5-5

U:\CADD\9706\OandM\9706OM28.dwg 03/08/99 2:04 pm

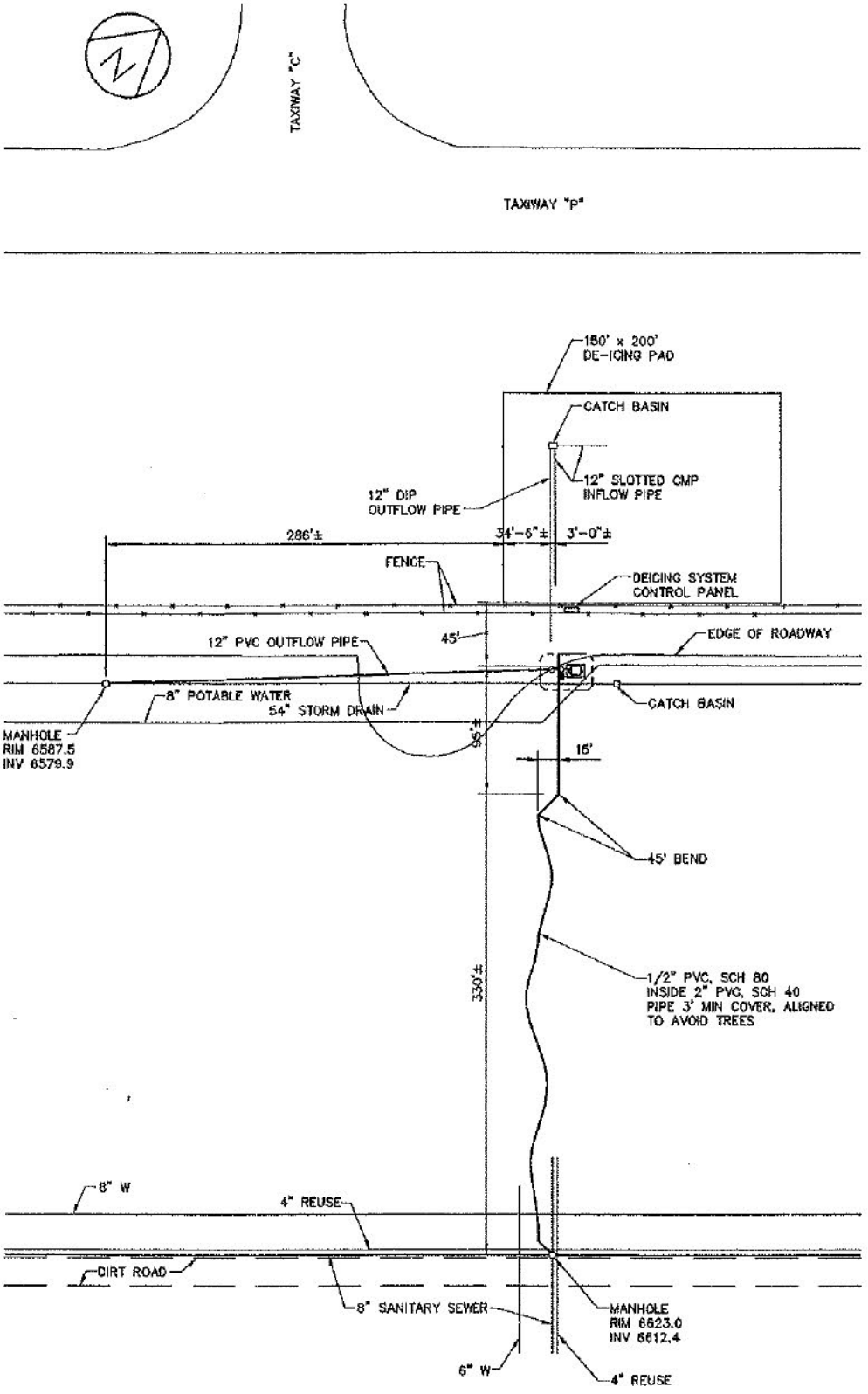

SITE PLAN

0 30 60 120

SCALE IN FEET

Grand Canyon National Park Airport
Water Supply, Treatment Facility and Deicing System
Operations and Maintenance Manual

DEICING SYSTEM–COLLECTION, STORAGE AND DISPOSAL CONTROL PANEL LOCATION

Figure No. 5–6

U:\CADD\9706\OandM\97060M32.dwg 03/08/99 1:35 pm

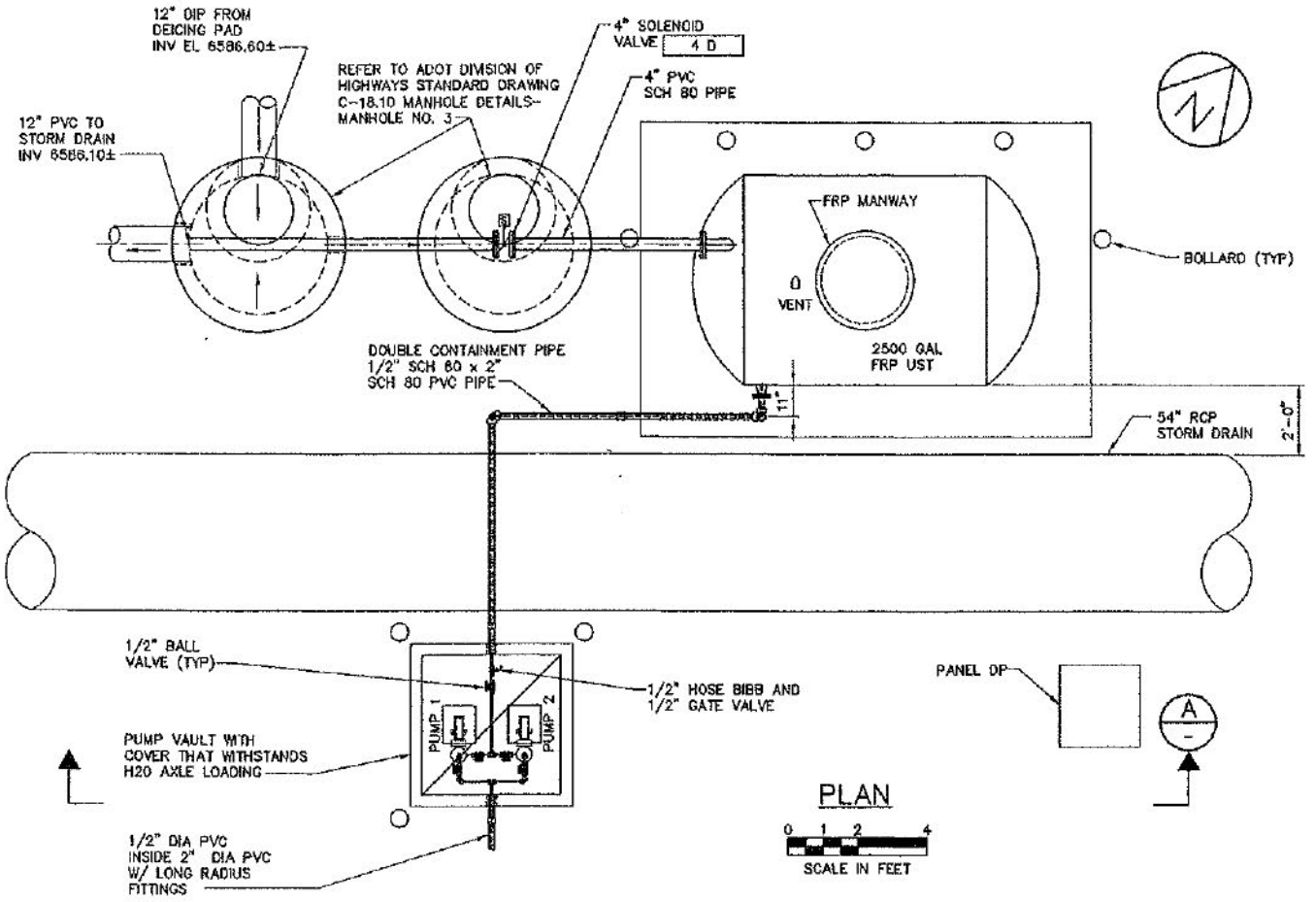

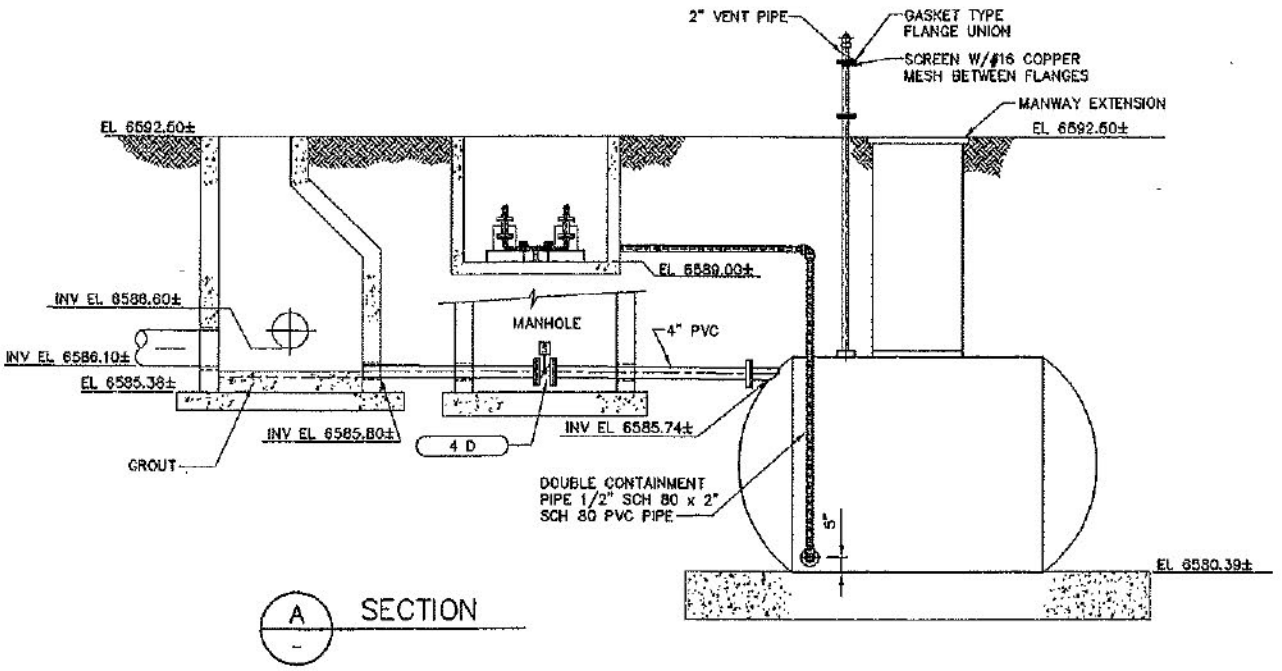

Grand Canyon National Park Airport
Water Supply, Treatment Facility and Deicing System
Operations and Maintenance Manual

DEICING SYSTEM–COLLECTION, STORAGE AND DISPOSAL PANEL DP LOCATION

Figure No. 5–7

U:\CADD\9706\OandM\9706OM33.dwg 03/08/99 1:35 pm

the chlorine residual drops below the target concentration in the 375 Kgal underground storage reservoir and a violation is about to occur, the alarm is audible and visual.

When an alarm goes off, the operator goes to the central alarm room in order to identify the nature of the alarm, acknowledge it, and take the appropriate action that the alarm warrants. In case of an after hours alarm, the WS panel automatically actuates a digital pager that informs the operator on call of an alarm condition. The pager does not inform the operator of a specific alarm condition and the operator must first go to the central alarm room to determine the nature of the alarm. If the alarm is a water treatment system alarm, the operator will have to go to the PTS control panel to determine the source of the alarm.

Table 5-1. Control Panel locations

Control Panels and Interfaces	**Panel or Control Location**
Water System (WS) Main Control Panel	Alarm Room Figure 5-5
Catchment Pump (CP) Motor Starter Panel	Catchment Area Pump Station Figure 5-3
Uphill Storage Tank RTU and Antenna	On 1.4 Mgal Storage Tank No.1 Figure 5-4 Key Note 29
Oil/Water Separator Inlet Solenoid Valve Control Panel	By Valve Vault No. 7 and O/W Separator Figure 5-4 Key Note 39
30 Kgal Underground Storage Tank Solenoid Valve Control Panel	Storage Area Figure 5-5
Packaged Treatment System (PTS) Control Panel	On Package Treatment System Figure 5-5
GAC Control Panel	By GAC Columns Figure 5-5
G1 Motor Control Center (MCC) - Catchment Basin Pump - Recirculation Pump - Package Treatment System Influent/Effluent Pumps	In Distribution Pump Room Figure 5-5
Independent Panels - Not connected to WS or PTS Panels	
Deicing Pad Control Panel (Motorized Valve and Pumps)	Figure 5-6
Oil/Water Separator Sludge Pump Control Panel	By Valve Vault No. 7 and O/W Separator Figure 5-4 Key Note 40

Table 5-2. Circuit Breaker Panel Locations

Panel Designation	Equipment Served	Panel or Control Location
Panel TSB (Potable Water)	- Off Site Potable Water Motorized Valve - Motor Control Center (MCC) G1	Storage Room Figure 5-5
Panel GP (General Purpose)	- Water Treatment Facility Room receptacles and lights	Laboratory Figure 5-5
Panel CP (Control Purpose)	- 30 Kgal Tank Solenoid Valve - Chlorine Analyzers - Turbidity Meters - Chemical Storage Tank Mixers - Chemical Metering Pumps - GAC Control Panel - WS Control Panel - WT Control Panel	Laboratory Figure 5-5
Panel UHST (Uphill Storage Tanks)	- Uphill Storage Tank RTU - Oil Water Separator Sludge Pump - BTEX Analyzer - Oil Water Separator Solenoid Valve	By BTEX Analyzer Shelter Figure 5-4 Key Note 34
Panel DP (Deicing Pad)	- Deicing Solution Pumps - Deicing System Control Panel - Control Valve to Inlet of Deicing Storage Tank	Figure 5-7

Table 5-3. Equipment Control Panel List and Associated Alarms/Controls

Equipment or Sensor	Local At Equipment	Water System (WS) Control Panel (in Alarm Room)	Package Treatment System (PTS) Control Panel
WATER SYSTEM (WS) GENERAL CONTROL PANEL FEATURES			
Digital Voice Paging		X	
Catchment Basin Sump			
LOW Level Alarm Locks out catchment basin pump start signal from Uphill Tanks		X	
Catchment Basin Raw Water Pumps			
HAND/OFF/AUTO Selector Switch	X		
HOA Status Indication		X	
PUMP ON Status Indication	X	X	

Table 5-3. Equipment Control Panel List and Associated Alarms/Controls (cont'd)

Equipment or Sensor	Local At Equipment	Water System (WS) Control Panel (in Alarm Room)	Package Treatment System (PTS) Control Panel
MOTOR OVERLOAD	X		
Start Push-button	X	X	
Pump Fail		X	
Control Panel POWER Failure		X	
Alarm Resets		X	
Elapse Time Meter	X		
Discharge Pressure Gauge	X		
1.4 Mgal Uphill Storage Tanks/125 Kgal Uphill Storage Tanks			
Level Indication	X	X	
HIGH HIGH LEVEL Alarm (Overflow)		X	
Catchment Pump / Pump 1 (FUTURE/SPARE) Start Setpoint		X	
Catchment Pump / Pump 1 (FUTURE/SPARE) Stop Setpoint		X	
Pump 2 Start Setpoint (FUTURE/SPARE)		X	
Pump 2 Stop Setpoint (FUTURE/SPARE)		X	
Oil/Water Separator			
Sludge Sump HIGH LEVEL Flow Switch	X	X	
Sludge Pump ON/OFF	X		
Inlet Solenoid Valve ON/OFF Valve automatically closes when 30 Kgal Tank Inlet Valve is Closed.	X	X	
30 Kgal Underground Storage Tank (Existing)			
Inlet Control Valve (ON/OFF)	X		
Inlet Control Valve (OPEN/CLOSE) Also closes oil water separator valve Closes automatically on HIGH-HIGH Tank level alarm	X		
Inlet Control Valve Auto Status	X	X	
LOW-LOW LEVEL Alarm		X	
HIGH-HIGH LEVEL Alarm		X	

Table 5-3. Equipment Control Panel List and Associated Alarms/Controls (cont'd)

Equipment or Sensor	Local At Equipment	Water System (WS) Control Panel (in Alarm Room)	Package Treatment System (PTS) Control Panel
Emergency Eye Wash Showers			
SHOWER ACTIVATION Alarm Signal to Digital Voice Paging		X	
375 Kgal Underground Storage Tank			
Level Indication	X	X	
HIGH LEVEL Alarm 375 Kgal Tank Water Depth = 10.65 ft		X	
HIGH LEVEL Treatment System Shut down 375 Kgal Tank Water Depth = 10.15 ft		X	
LEVEL signal to shutoff off-site potable water supply - 375 Kgal Tank Water Depth = 7.65 ft		X	
LOW LEVEL Treatment System Startup 375 Kgal Tank Water Depth = 6.75 ft		X	
LOW LEVEL Alarm 375 Kgal Tank Water Depth = 6.6 ft (150,000 gallons)		X	
5-day Domestic Supply Level Alarm 375 Kgal Tank Water Depth = 6.2 ft		X	
4-day Domestic Supply Level Alarm 375 Kgal Tank Water Depth = 5.91 ft		X	
3-day Domestic Supply Level Alarm 375 Kgal Tank Water Depth = 5.62 ft		X	
2-day Domestic Supply Level Alarm 375 Kgal Tank Water Depth = 5.32 ft		X	
1-day Domestic Supply Level Alarm 375 Kgal Tank Water Depth = 5.03 ft		X	
Domestic Supply Shut off Level Alarm 375 Kgal Tank Water Depth = 4.68 ft (92,600 gallons)		X	
LOW LOW LEVEL Alarm Water Depth = 1.67 ft Shut off Recirculation Pumps		X	

Table 5-3. Equipment Control Panel List and Associated Alarms/Controls (cont'd)

Equipment or Sensor	Local At Equipment	Water System (WS) Control Panel (in Alarm Room)	Package Treatment System (PTS) Control Panel
Off-Site Source Supply Connection			
LOCAL/OFF/REMOTE Switch	X	X	
VALVE OPEN Status Indication	X	X	
VALVE CLOSE Status Indication	X	X	
FAIL TO OPEN/FAIL TO CLOSE	X	X	
Open Push-button Valve Opens Automatically at 6.2 ft Water Depth in 375 Kgal Tank	X	X	
Close Push-button Valve Closes Automatically at 7.65 ft Water Depth in 375 Kgal Tank	X	X	
Flow Indication and Totalization	X	X	
PACKAGE TREATMENT FACILITY (TF) CONTROL PANEL GENERAL FEATURES			
Package Plant Treatment System			
POWER ON Status		X	X
POWER FAILURE Alarm Signal to Digital Voice Pager		X	X
SYSTEM FAILURE Alarm Signal to Digital Voice Pager		X	X
Treatment System Start Set Point 375 Kgal Water Depth = 6.75 ft			X
Treatment System Stop Set Point 375 Kgal Water Depth = 10.15 ft			X
Backwash Sump High Level Alarm			X
Backwash Status			X
Low Chlorine Residual Alarm Digital Voice Paging			X
Chlorine Residual Indicator			X
Alarm Reset			X
H/O/A Selector Switch			X
PUMP RUNNING Status			X
FILTER Status			X

Table 5-3. Equipment Control Panel List and Associated Alarms/Controls (cont'd)

Equipment or Sensor	Local At Equipment	Water System (WS) Control Panel (in Alarm Room)	Package Treatment System (PTS) Control Panel
Filter Headloss			X
GAC Columns			
GAC Headloss			X
Package Plant Influent/Effluent Pumps			
HAND/OFF/AUTO Selector Switch			X
PUMP ON Status Indication		X	X
MOTOR OVERLOAD Alarm			X
Start Push-button			X
Stop Push-button			X
Alarm Resets		X	X
Elapse Time Meter			X
Discharge Pressure Gauge	X		
BTEX/PAH Monitoring System			
BTEX Indication	X		
HIGH BTEX Alarm Activates Digital Voice Paging.	X	X	
Influent Turbidity Meter			
Turbidity Indicating Controller	X		X
Turbidity Indication	X		X
Effluent Turbidity Meter with Chart Recorder			
HIGH TURBIDITY Alarm	X	X	
Turbidity Indication	X	X	
Water Meter			
Totalization	X		
Polymer/Alum Feed Pumps			
Hand/Off/Auto Selector Switch	X		
PUMP RUNNING Status	X		

Table 5-3. Equipment Control Panel List and Associated Alarms/Controls (cont'd)

Equipment or Sensor	Local At Equipment	Water System (WS) Control Panel (in Alarm Room)	Package Treatment System (PTS) Control Panel
Hypochlorite Feed Pumps			
On/Off Switch (pump serving recirculation pump discharge feed point only)	X		
Hand/Off/Auto Selector Switch (pump serving GAC inlet feed point)	X		
PUMP RUNNING Status	X		
Distribution Pump Discharge Pipe Chlorine Residual Analyzer			
Residual Indicator	X	X	
LOW RESIDUAL Alarm		X	
Recirculation Pump Suction Pipe Chlorine Analyzer			
Residual Indicator	X	X	
LOW RESIDUAL Alarm		X	
Residual Indicating Controller	X	X	
Recirculation Pumps			
HAND/OFF/AUTO Selector Switch On auto pumps automatically shut off at 375 Kgal Tank water depth = 1.67 ft		X	
PUMP ON Status Indication	X	X	
MOTOR OVERLOAD Alarm		X	
Start/Stop Push-button		X	
Alarm Resets	X	X	
Elapse Time Meter		X	
Backwash System			
BACKWASH Status		X	X
Backwash Sump Level Indicator	X	X	
INDEPENDENT CONTROL SYSTEMS			
Deicing Sump			
Level Indication	X		
ON/OFF Panel	X		
Sump HIGH LEVEL Indication	X		
Sump LOW LEVEL Indication	X		
Deicing Pumps ON/OFF	X		

5.2 CATCHMENT AND CATCHMENT AREA PUMP STATION OPERATION

There are no controls for operation of the catchment basin compartments. Instrumentation and controls are only used for the catchment basin pump station.

5.2.1 Normal Operation

Under normal operations, water collected in the northern compartment flows through the connecting pipe into the southern compartment. Water collected in the southern compartment flows into the catchment catch basin sump.

The catchment basin pump draws raw water from the catchment sump and pumps it to the 125 Kgal uphill storage tank. Raw water flows from the 125 Kgal uphill storage tank to the 1.4 Mgal uphill storage tanks. The catchment basin pump turns ON and OFF based on the water level in the storage tanks, as described below. The catchment basin has a LOW level switch installed in the catchment sump. This switch turns OFF the raw water pump when the water level in the sump falls below a field adjustable set point (LOW level). The LOW level switch installed in the catchment sump overrides the LOW level pressure setting for the pressure level sensor employed at the uphill storage tanks (i.e. when the water level in the uphill storage tanks is at the LOW level, the catchment pump starts only if the water level in the catchment sump is above the pre-set LOW level). Pump operation is set to automatic operation locally at the pump.

5.2.2 Startup

To start operation of the catchment area basins and pump perform the following steps:

1. Ensure that the catchment pump suction and discharge valves are open.

2. Ensure that any pipe blocks installed at the catchment sump inlet pipe and at the basins interconnecting pipe during cleaning operations are removed.

3. Ensure that the valves on the inlet and outlet pipes at the uphill 125 Kgal storage tank are open.

4. Ensure that power is supplied to the pump at MCC G1. Start the pump locally to test operation. Ensure that the catch basin pump is set on AUTO mode of operation locally at the pump.

5.2.3 Emergency Shut Down

Emergency operation could occur when the north and/or south catchment basins are contaminated. If this occurs the following tasks should be performed:

1. Shut off the catch basin sump pump remotely at the WS control panel so that contaminated raw water is not pumped to the uphill storage tanks.

2. As an initial safety measure check the catchment pump vault air space for contamination. If deemed safe to enter, close the pump suction and discharge valves and ensure that the pump discharge valve to the storm drain is in the normally closed position so that contaminated water is not drained to the storm drain. Set the pump operation to "off" locally at the pump.

3. Dispose of contaminated water properly according to airport procedures.

4. Clean the northern and/or southern compartments, piping and the pump with an approved decontamination agent and dispose of wash water appropriately after cleaning.

5. Upon completion of cleaning activities refer to Section 5.2.2 for restarting catchment area basins and pump operation.

5.2.4 Normal Shut Down

Cleaning, maintenance and shut-down operations can be performed on the northern compartment basin by plugging the pipe inlet to the southern compartment. This will allow uninterrupted operation of the catchment area pump station. The southern compartment can be cleaned but the catchment pump station would have to be temporarily shut down (see Section 5.2.4) during the cleaning operation. Cleaning, maintenance and shut-down operations are performed following the steps below:

1. For shutdown of the northern compartment, drain compartment water into the southern compartment and plug the interconnection pipe. Dispose of any remaining water according to airport procedures.

2. For shutdown of the southern compartment, plug the interconnection pipe and shut off the valve from the compartment to the sump. Drain or pump compartment water to the northern compartment and dispose of remaining water according to airport procedures.

3. Perform maintenance and repair on the drained compartment including the Hypalon lining repairs as described in Section 7.
4. If cleaning the southern compartment, clean the catchment area pump and piping also. Dispose of wash water according to airport practices.

5. After cleaning completion remove the plug in the pipe between catchment areas and re-start catchment basin operation as described in Section 5.2.2.

5.2.5 Shut-down Operation - Catchment Area Pump

Maintenance and repair on the catch basin sump pump should be performed according to the pump manufacturers instructions.

1. Turn off the pump locally.
2. Close the pump suction, bypass and discharge valves.
3. Turn off, lock and tag the pump at the motor control center (MCC) G1.
4. Remove the pump if necessary and/or perform maintenance and repair per manufacturers instructions.
5. Reinstall the pump.
6. Open the 6 inch inlet valve and 4 inch discharge valve to the uphill storage tank.
7. Remove lock and tag and turn ON the pump at MCC G1.
8. Turn on the pump locally and set the pump on manual operation.
9. Test operation of pump manually.
10. If the pump operation is satisfactory set pump operation on AUTO locally at the pump otherwise redo repair process.

5.3 UPHILL STORAGE TANKS OPERATION

The three uphill storage tanks are hydraulically connected so that the tanks have the same water surface elevation. The level in the uphill storage tanks is monitored using a common level sensor located at the inlet to the 1.4 Mgal uphill storage tanks. A second level float switch is located in the 125 Kgal uphill storage tank for redundancy.

At the LOW level setting for the uphill storage tanks pressure level sensor , a visual alarm is triggered at the WS Panel to notify the operator that the uphill water storage tanks will soon run dry. This low level alarm has to be acknowledged and reset manually. This alarm will be overridden if the alarm for the catchment basin sump low level is active. The uphill storage tank HIGH level setting also actuates a visual alarm to notify the operator that an overflow of the uphill storage tanks is about to occur. This alarm also has to be acknowledged and reset manually.

5.3.1 Normal Operation

Under normal operation, the raw water from the catchment area is pumped to the 125 Kgal tank. The outlet of 125 Kgal tank flows into the 1.4 Mgal tanks. Uphill storage tanks effluent flows by gravity through the oil/water separator to the 30 Kgal underground storage tank under the Water Treatment Facility.

5.3.2 Start Up

Refer to Figures 2-3, 2-4, and 2-5 for tank valve locations. Perform the following the following steps to start the operation of an uphill storage tank:

1. Open the Tank Inlet Valve.

2. Open the Tank Outlet Valve.

5.3.3 Uphill Storage Tank Bypass and Shutdown

The three uphill storage tanks are piped and valved such that either the 125 Kgal or either of the 1.4 Mgal tanks can be bypassed for maintenance, repair or cleaning by closing the inlet and outlet valves to the selected tank. The uphill storage tanks are cleaned and drained according to airport procedures. Cleaning and disinfection of the tanks is performed according to ADEQ Bulletin No. 9 (refer to Appendix). Refer to Figures 2-3, 2-4, and 2-5 for tank valve locations.

Tank Bypass Procedure:

1. Close the Tank Outlet Valve.

2. Close the Tank Inlet Valve.

3. Ensure that the common 1.4 Mgal tank's outlet valve is open when activating a 1.4 Mgal tank.

5.4 OIL/WATER SEPARATOR OPERATION

The oil/water separator sludge pump local control panel is not connected to the WS or PTS control panels. This local control panel allows operation of the separator sludge pump. The other control operations at the oil water separator are listed below and are relayed by the Uphill storage tank RTU unit by a radio link to the WS control panel. The control operations are:

- A high level switch in the oil/water separator sludge tank
- A flow indicator switch at the oil/water separator inlet.
- An oil/water separator solenoid valve that can be activated at a local control panel by the oil/water separator or remotely at the WS control panel.

5.4.1 Normal Operation

Under normal operating conditions the oil/water separator treats effluent flow from the uphill storage tanks. A flow control valve maintains a constant 85 gpm feed flow to the separator. Effluent from the oil water separator flows to the 30 Kgal underground storage tank adjacent to the water treatment facility.

5.4.2 Start Up

To activate the oil water separator conduct the following steps (refer to Figure 3-2):

1. Ensure that the valve on the oil/water separator bypass line is closed.

2. Ensure that the manual oil/water separator inlet and outlet valves are open.

3. Visually check the level of sludge in the sludge collection hopper. Make sure that the hopper is sufficiently clean. Otherwise activate the sludge pump in the valve vault adjacent to the oil/water separator until the collected sludge is removed.

4. Ensure that the flow controller at the inlet of the oil/water separator is set for 85 gpm.

5. Set the inlet oil/water separator solenoid valve operation to automatic operation.

5.4.3 Normal Shut Down and Bypass Operation

Uphill storage tank effluent flow is bypassed around the oil water separator for normal maintenance and repair operations or during extreme freeze conditions by following the steps listed below (For vault locations see Figure 2-3):

1. Set the oil/water separator inlet solenoid valve operation in Valve Vault No. 7 to manual and close the valve at the local control panel.

2. Close the manual inlet and outlet valves for the oil/water separator in Valve Vaults No. 6 and No.7.

3. Open the oil/water separator bypass valve in Valve Vault No. 7.

5.4.4 Emergency Shut Down

In the event that a significant contamination is detected in the catchment basin area, either by a BTEX/PAH monitoring system alarm or visual inspection of the catchment area, the operation of the oil/water separator and raw water feed to the treatment facility is halted. The following procedure is followed when a significant contamination is detected:

1. Stop the catchment sump pump (see Section 5.2.2).

2. Stop flow from the 125 Kgal uphill storage tank to the 1.4 Mgal storage tanks by closing the uphill storage tank inlet valve in Valve Vault No. 5.

3. Close the common outlet valve for the 1.4 Mgal storage tanks in Valve Vault No. 7.

4. Determine the extent of the contamination and dispose of highly contaminated water as directed in the Airport operating procedures.

5. During the decontamination work, if it is found that contaminated water is localized to the 125 Kgal uphill storage tank and catchment basins, reactivate feed from the 1.4 Mgal storage tanks to the water treatment system (30 Kgal underground storage tank) by opening the common 1.4 Mgal tanks outlet valve in Valve Vault No. 5 to the oil water separator.

6. Be sure to decontaminate and wash connecting pipes.

7. Decontaminated solutions and wash solutions collected in the tanks and from pipes shall be disposed of per proper airport procedures.

8. Upon completion of decontamination efforts return the raw water storage system to normal operation (see Section 5.3.2 for start up operations of tanks and Section 5.4.2 for starting the oil/water separator).

5.5 30 KGAL REWATER STORAGE TANK OPERATION

Automated valves and a level switch control the flow into this tank. A float valve on the tank inlet pipe serves as a mechanical, automatic influent shutoff valve to provide additional tank overflow protection.

5.5.1 Normal Operation

Under normal operation, when the 30 Kgal tank water level drops below the set level, the plant control system opens the control valve serving the 30 Kgal Tank and the control valve at the inlet of the Oil/Water Separator allowing raw water to flow by gravity from the uphill storage tanks into the 30 Kgal Tank. These valves are opened at their respective local control panels (see Table 5-1 for panel locations). When the 30 Kgal Tank water level rises to the set level, the raw water control system automatically shuts off both control valves, closing the connection to the uphill storage tank raw water supply (if the oil water separator is not being bypassed). Based on level switch information, the plant control system is capable of actuating two alarms: 30 Kgal Tank HIGH level alarm and a 30 Kgal Tank LOW level alarm. Both alarms have to be acknowledged and manually reset. Activation of the low level alarm automatically shuts off the package plant influent pump until the alarm is reset.

5.5.2 Start Up

1. Ensure the manual valve on the 30 Kgal Tank bypass line is closed.

2. Inspect manual 30 Kgal Tank float valve for proper operation.

3. Ensure that the package treatment system influent pump is set to automatic mode. Ensure that the package treatment plant and the GAC columns are also operating under automatic mode by inspecting the respective control panels.

4. Ensure power is supplied to the tank inlet solenoid valve by inspecting circuit breaker panel CP.

5. Set the tank inlet solenoid valve to automatic operation at its local control panel.

5.5.3 Tank Shut Down

If normal or emergency maintenance on the 30 Kgal Tank or the influent pump is required, then raw water from the uphill storage area is fed by gravity directly to the water treatment facility. In order to gravity feed raw water from the uphill storage tanks area to the water treatment facility package plant treatment system the following actions are performed:

1. Close and lock out 30 Kgal Tank inlet solenoid valve at the local valve control panel. If performing electrical or mechanical work in the solenoid valve area, lock out and tag valve power at the circuit breaker panel CP.

2. Shut down and lock out the package plant influent pump operation at the PTS panel.

3. Package treatment system control operation is switched from the automatic mode to manual operation mode at the PTS control panel. If the package system is left in automatic mode under gravity feed operation, components such as the coagulant feed pumps and effluent pump will not run because the influent pump is locked out of operation. Switching to manual mode allows the coagulant pumps and effluent pumps to run without the influent pump activated.
4. Open the 30 Kgal Tank manual bypass valve.

5. Ensure the gravity flow to the treatment system is held at 85 gpm by adjusting the gravity inlet flow rotameter at the package treatment system inlet. Also check to ensure that the flow control valve at the uphill storage tanks oil water separator is set at or below 85 gpm.

5.6 WATER TREATMENT FACILITY OPERATION

The water treatment facility equipment is separated into the following control components:

- Package Treatment Plant (clarifier, mixed media filter, coagulant feed pumps, turbidity meters, influent and effluent pumps)
- GAC Adsorption Columns
- Disinfection Feed Equipment (recirculation pumps , hypochlorite feed pumps, and chlorine residual analyzers)

5.6.1 Package Treatment Plant Operation

The package plant contains the following control components:

- Clarifier
- Mixed media filter
- Coagulant feed pumps
- Turbidity meters
- Influent and effluent package plant pumps

5.6.1.1 Normal Operation (Automatic)

Under normal operations the package plant control equipment operates in automatic mode. Raw water is fed to the package system from the 30 Kgal Tank by the influent pump. Raw water entering the package plant system is dosed with coagulant chemical, passed through a static mixer, and then fed into the package plant adsorption clarifier. Effluent from the clarifier is then passed through a mixed media filter. Effluent from the filter is pumped by the effluent pump to the GAC columns. In automatic mode the influent pump is activated based on raw water levels in the 30 Kgal Tank and 375 Kgal Tank. Package plant coagulant chemical feed pumps and the effluent pump are activated only when the influent pump is operating. The hypochlorite feed pump, which provides feed to the GAC outlet, operates only when the effluent pump is activated unless the hypochlorite feed pump is set to operate manually when the package treatment plant is receiving flow directly from the uphill storage tanks.

For normal operation, coagulant and hypochlorite feed pump rates are adjusted from preset values manually. The chemical feed rates can be adjusted automatically by the package plant controller based on influent turbidity readings, but automatic dose control operation is not recommended because influent raw turbidity is expected to be constant. The package plant manufacturer recommends a 3-10 mg/l Alum dose and a 0.05 mg/l polymer dose for average recorded raw water turbidity at the site of 1.9 NTU. Alum and polymer doses should be adjusted however based on field experience and observations. Hypochlorite feed is adjusted to maintain a 0.7 mg/L chlorine residual in the 375 Kgal Underground Storage Tank. Chemical pump flow setting information is supplied in the Appendix.

5.6.1.2 Alternate Operation (Manual)

If raw water is bypassed around the 30 Kgal storage tank and fed directly to the package treatment system, the package system must be manually operated. The chemical feed pumps are activated manually and feed rates are set manually during the direct feed of raw water to the package treatment system. The influent pump operation is disabled and the effluent pump is operated in manual mode.

5.6.1.3 Backwash Operation

Backwash of the clarifier and/or filter is activated automatically based on high media head loss measured by pressure sensors installed inside the clarifier and filter. The package plant controller activates the backwash cycle for the unit that has its preset head loss level achieved. The controller is also programmed to initiate a backwash cycle of the filter and clarifier, if the GAC effluent turbidity meter reading exceeds a preset value. In order to backwash the clarifier and/or filter of the package system, the entire water treatment facility is taken off line. The backwash is initiated when the package plant controller closes the inlet and outlet isolation motorized valves to the package system and opens the motorized valve on the backwash water supply line to the package system. The backwash water supply line receives pressurized flow from the distribution system pneumatic tank. During a specified time in the backwash cycle, an air blower is also activated to air scour the clarifier and filter media. The air scouring start time and duration is programmed at the package plant controller. The backwash operation can also be manually started.

5.6.1.4 Startup

To start up the system under automatic operation perform the following steps:

1. Ensure that the manual inlet and outlet valves for the package treatment system are open.

2. Ensure that valves (polymer, alum, hypochlorite) on the chemical feed discharge pump pipes are open.

3. Ensure that adequate chemical is available in the chemical storage tanks.

4. Ensure that the solenoid valves at the oil-water separator and 30 Kgal tank are set to automatic operation.

5. Ensure that the GAC columns are set to automatic operation and are set in the correct flow series sequence(see Section 5.6.2).

6. Set the influent pump, effluent pump for automatic operation at the PTS control panel. Ensure that the chemical feed pump operation is set to automatic locally at the pumps. Ensure that power is available to the pumps by inspecting the circuit

breaker panel CP. Activate the chemical feed pumps automatic operation locally and the influent and effluent pumps automatic operation at the PTS control panel.

Note that if the package treatment system is receiving raw water by direct feed, (30 Kgal underground storage tank is bypassed) the chemical pumps must be taken off automatic mode and operated manually. The package treatment system influent pump must also be shut off and locked out of automatic operation to allow manual operation of the package treatment plant. The effluent pump for the package treatment system should be also set to manual operation.

5.6.1.5 Shutdown

To shut down the package water treatment system for emergency situations or repair, conduct the following steps:

1. Power down the package plant system at the local control panel PTS. For extended shut downs or if work is to be performed on mechanical or electrical equipment, lock off and tag the power supply at circuit breaker panel CP.

2. Ensure that the influent, effluent and chemical feed pumps are shut down. If work is to be performed on mechanical or electrical equipment, lock off and tag the power supply to the pumps at circuit breaker panel CP.

3. Close the manual inlet and outlet valves to the package system to isolate it from the 30 Kgal Tank and the GAC columns.

4. At the respective local control panels, close the inlet solenoid valves at the oil water separator and 30 Kgal underground storage tank.

5. Make sure that the the off-site potable water feed to the 375 Kgal underground storage tank is set to automatic operation.

6. Refer to the manufacturer's O&M manual for proper storage of the clarifier and filter media during short or long term shut downs.

7. If shut down is to be for an extended period, it may be advisable to rinse out remaining chemical solutions held in the chemical feed storage tanks and dry tanks in preparation for new chemical feed solutions.

8. Conduct necessary maintenance.

9. Refer to section 5.6.1.4 to restart the package treatment system.

5.6.2 GAC Column Operation

A local control panel at the GAC columns is used to manipulate the closed or open position of the inlet, outlet and flow arrangement (parallel flow vs. series flow) motorized valves.

5.6.2.1 Normal Operation

The GAC columns operate normally in a series flow pattern and only when the package plant system is operating. When the package system is shut down or is being backwashed, the GAC motorized valve system isolates the column inflow and outflow points from the package plant backwash flow.

5.6.2.2 Backwash Operation

On a rotating basis one of the GAC columns is backwashed on a timed interval. The time interval is set at the GAC local control panel. When a GAC column is backwashing, flow from the package treatment plant is automatically directed to the remaining on-line GAC column.

5.6.2.3 Startup

To start up the GAC columns under normal operation conduct the following:

1. Ensure that the manual inlet and outlet valves to the column system are open.

2. Ensure the motorized valves are open to allow parallel or series flow operation of the columns. Valves may need to be set to allow parallel flow operation of the columns when one column is down for maintenance. Flow configuration is set at the local GAC control panel.

3. Ensure that the column motorized valves operation is set to AUTO at the GAC local control panel to allow automatic isolation of the GAC columns during a package treatment system or GAC column backwash.

5.6.2.4 Shut Down

If both GAC columns are shut down for maintenance, the package water treatment system is also shut down (refer to Section 5.6.1.5). If only short term maintenance is expected, such as carbon sampling (performed yearly) then one column is taken down at a time. Flow from the package plant is directed to the remaining on-line column. To minimize shut down times for each column, schedule maintenance and GAC sampling work to occur at the same time. To shut down a GAC column perform the following steps:

1. Close appropriate inlet and outlet valves to the GAC column to be shutdown.

2. Disable power to the GAC system at the local control panel.

3. Refer to the manufacturer operation and maintenance guide for storage and care of the carbon media during short or long term shut downs.

4. If full shut down of the GAC columns is required, shut down the package water treatment system as outlined in Section 5.6.1.5. For a full shut down lock out and tag the power supply to the columns at the circuit breaker panel CP.

5.7 DISINFECTION SYSTEM OPERATION

The disinfection control system consists of the sodium hypochlorite feed pumps and the 375 Kgal underground storage tank recirculation pumps.

5.7.1 Normal Operation

Sodium hypochlorite is fed simultaneously to the GAC effluent pipe and at the recirculation pump discharge point by two separate feed pumps. The feed rates to these dose points are adjusted manually at the respective feed pump. The hypochlorite feed rates are adjusted to establish a 0.7 mg/l free chlorine residual in the 375 Kgal underground storage tank. The hypochlorite feed pump settings need to be checked daily. Feed rate is adjusted accordingly if the measured tank chlorine residual is more or less than 10% off the required residual value. Pump settings required to achieve the dose rates are provided in the Appendix.

Under normal operations both recirculation pumps are operating. Each pump serves a compartment of the tank. As an alternate operation, the recirculation pumps can be valved so that both pumps can draw from and feed to the same compartment or draw only from one compartment and feed only to the other compartment.

The recirculation pump discharge continuously receives hypochlorite feed to maintain the 375 Kgal tank chlorine residual. For protection, the recirculation pump will automatically shutoff when the water level in the storage tank drops below a LOW level setting. The chlorine residual analyzer installed on the recirculation pump discharge lines continuously monitors the chlorine level in the flow drawn from the 375 Kgal underground storage tank. This residual chlorine concentration reading is then used as an aid to manually adjust the hypochlorite feed rate into the 375 Kgal storage tank.

5.7.2 Recirculation Pump Startup

Startup of a recirculation pump is accomplished by performing the following steps:

1. Ensure the inlet and outlet valves to the pump are open.

2. Ensure that the valves on the suction and discharge manifold lines are closed such that each pump mixes a selected compartment.

3. Ensure that power supply is available to the pump by inspecting MCC G1.

4. Activate the power to the pump at MCC G1.

5. Ensure that the valves on the hypochlrorite feed pipe (connected to the pump discharge pipe) are open.

6. Ensure the hypochlorite feed pump serving the recirculation pump discharge is activated. See Section 5.7.3 for start up of the hypochlorite pumps

5.7.3 Hypochlorite Feed Pump Startup

1. Ensure that power is available to the hypochlorite feed pumps by inspecting the circuit breaker panel CP.

2. Ensure that valves on the hypochlorite feed lines are open to allow flow to the respective feed points.

3. Ensure that there is fresh hypochlorite feed solution in the storage tank.

4. Turn on the feed pumps locally. Set the operation of the hypochlorite feed pump serving the GAC outlet feed point to automatic operation locally at the pump. Under automatic operation the GAC outlet feed point will only operate when the package treatment system effluent pump is operating. The hypochlorite pump feeding the recirculation pump discharge feed points can only be operated in manual mode.

5. Verify hypochlorite feed rates using calibration chamber on each pump suction pipe.

5.7.4 Recirculation Pump Shut Down

To allow repair or maintenance of one of the two recirculation pumps, the recirculation pump remaining in operation must be valved to mix both the compartments of the 375 Kgal storage tank. Follow the steps below in order to shut down one recirculation pump and have the remaining pump circulate the contents of the two tank compartments:

1. Turn off and lock and tag the pump selected for shut down.

2. Disconnect the power supply for the pump selected for shut down at MCC G1, lock and tag.

3. Close the suction and discharge valves for the pump selected for shut down.

4. Open the manifold pipe discharge valve and the manifold pipe suction valve to allow the pump remaining in operation to draw flow from and discharge to each tank compartment simultaneously.

5. Perform maintenance or repair on the shut down pump according to manufacturers instructions.

6. Start the repaired or shut down pump as described in Section 5.7.2.

5.7.5 Hypochlorite Pump Shut Down

1. Shut down the hypochlorite feed pumps locally.

2. If conducting electrical work shut down the power supply to the pumps at circuit breaker panel GP.

3. Close the valves on the discharge pipes of the pumps.

4. For extended shut down periods, drain excess chemical remaining in the storage tank. Rinse the storage tank clean.

5.8 375 KGAL UNDERGROUND STORAGE TANK OPERATION

The 375 Kgal underground storage tank stores finished water from the water treatment facility for potable water distribution and fire fighting requirements. The level in the storage tank is controlled by a ultrasonic level indicator and the pressure in the pneumatic tank. The tank is divided into two compartments. Backup potable water supply feeds directly into the storage tank.

5.8.1 Normal Operation

Under normal operations both tank compartments are in operation and both compartments receive GAC column effluent.

The underground storage tank level indicator and alarm system notifies the operators on how much water is left in the tank for domestic demand (90,000 gallons will remain for fire usage, plus an additional buffer volume of 60,000 gallons, resulting in a total volume of 150,000 gallons that must remain in the tank at all times. The water levels and corresponding fire and domestic water volumes available when both compartments are in operation (according to the Water and Fire Systems Project) are shown below:

Table 5-4. Tank Levels and Available Water with Both Compartments Operational

Reservoir Water Levels	Gallons Available for Domestic Use	Gallons Available for Fire Protection	Comments
6611.20	264,399	354,397	Top of Tank (Bottom of Rib)
6605.19	75,000	165,000	5 Day Alarm Level
6604.72	60,000	150,000	4 Day Alarm Level
6604.25	45,000	135,000	3 Day Alarm Level
6603.78	30,000	120,000	2 Day Alarm Level
6603.31	15,000	105,000	1 Day Alarm Level
6602.84	0	90,000	Domestic Water Shutoff
6600.00	0	0	Fire Protection Water Shutoff

5.8.2 Tank Compartment Start Up

To start the operation of a tank compartment conduct the following steps:

1. Open the valve on the GAC feed line to the tank compartment to be operated.
2. Open the diffuser isolation valves.
3. Ensure automatic flow from the off-site potable water source is activated by setting the operation of the motorized butterfly supply valve to automatic.
4. Start the recirculation feed pump as described in Section 5.7.2.
5. Start the hypochlorite feed to the recirculation loop.
6. Open the 24-inch tank compartment outlet valve.

5.8.3 Tank Compartment Shut Down

A tank compartment may be shut down for cleaning, painting, level sensor repair or recirulation diffuser maintenance. Maintenance in a tank compartment should only commence if the remaining operating compartment can satisfy fire flow demands. During any time 90,000 gallons of water should always be available in the remaining operating compartment to satisfy fire demands. The water levels and corresponding fire and domestic water volumes available for one compartment in service (according to the Water and Fire Systems Project) are shown in the following table:

Table 5-5. Tank Levels and Available Water with One Compartment Out of Service

Reservoir Water Levels	Gallons Available for Domestic Use	Gallons Available for Fire Protection	Comments
6611.99	63730	156316	Top of Tank (Bottom of Rib)
6610.78	45006	137592	5 Day Storage Level
6610.19	36007	128593	4 Day Storage Level
6609.61	27004	119590	3 Day Storage Level
6609.03	18002	110588	2 Day Storage Level
6608.44	9002	101588	1 Day Storage Level
6607.86	0	92586	Domestic Water Shutoff
6601.86	0	0	Fire Protection Water Shutoff

Follow the steps below to shut-down one compartment:

1. Close the valve on GAC effluent pipe to the compartment to be shut-off.

2. Make sure the flow from the off-site potable water source is turned off. Lock out the operation of the motorized off-site potable water supply motorized butterfly valve.

3. Close the 24-inch tank outlet isolation valve.

4. Shut off the hypochlorite feed to the recirculation loop being shut-down.

5. Shut down and lock out the recirculation pump serving the compartment.

6. Shut-down the recirculation pump locally and disconnect at the M.C.C. G1, lock and tag.

7. Close the inlet and outlet valves to the recirculation pump and close the isolation valves to the compartment recirulation diffuser.

8. Drain the compartment.

9. Perform necessary maintenance and repair.

10. Clean the tank, dispose of wash water according to airport procedure.

11. Refer to Section 5.8.2 for restoring the tank compartment to operation.

5.8.4 Off-site Potable Water Feed

If the water level in the 375 Kgal tank drops below a preset level, the backup potable water flow to the tank is automatically activated by opening the off-site potable water motorized control valve.

5.8.4.1 Off-site Potable Water Feed Startup

Conduct the following steps to activate the potable water feed:

1. Check to ensure that the manual shut off valves for the motorized off-site potable water supply valve in the distribution pump valve chamber are open.

2. Ensure that the valve on the motorized valve bypass line is closed.

3. Set the operation of the motorized off-site potable water supply valve to automatic at the WS control panel or locally at the valve.

5.8.4.2 Off-site Potable Water Feed Shutdown

Conduct the following steps to stop off-site potable water feed to the 375 Kgal underground storage tank:

1. Set the motorized butterfly operation to manual. Close the valve at the WS panel or locally at the valve.

2. If the valve is to be serviced close the manual isolation valves at the inlet and outlet of the motorized valve.

3. If off-site potable water supply flow to the 375 Kgal underground storage tank must continue during a motorized valve shutdown, open the valve on the motorized valve bypass line. During the bypass operation around the motorized valve water levels in the 375 Kgal underground storage tank are to be closely monitored to prevent tank overflow.

5.8.5 Automatic Tank Inlet Feed Shutdown

When the potable water level in the 375 Kgal underground storage tank goes above a preset HIGH level, the influent pump to the package treatment system and the butterfly control valve on the backup potable water transmission line are automatically closed as long as both valves are set to automatic control.

5.9 MISCELLANEOUS SYSTEMS

5.9.1 Emergency Eyewash

The laboratory emergency eye wash system is manually activated. The activation of the laboratory eyewash triggers an alarm on the water system control panel and the auto pager system dials the remote operator to report the alarm.

5.9.2 Chemical Storage

The cabinets are to be kept closed when not in use.

5.9.3 Reuse Water Supply

Reuse water is not currently used at the Airport. When reuse water systems are implemented at the airport the creation of cross-connections between the reuse water system and the potable water system will not be allowed.

5.5.2 Start Up

1. Ensure the manual valve on the 30 Kgal Tank bypass line is closed.

2. Inspect manual 30 Kgal Tank float valve for proper operation.

3. Ensure that the package treatment system influent pump is set to automatic mode. Ensure that the package treatment plant and the GAC columns are also operating under automatic mode by inspecting the respective control panels.

4. Ensure power is supplied to the tank inlet solenoid valve by inspecting circuit breaker panel CP.

5. Set the tank inlet solenoid valve to automatic operation at its local control panel.

5.5.3 Tank Shut Down

If normal or emergency maintenance on the 30 Kgal Tank or the influent pump is required, then raw water from the uphill storage area is fed by gravity directly to the water treatment facility. In order to gravity feed raw water from the uphill storage tanks area to the water treatment facility package plant treatment system the following actions are performed:

1. Close and lock out 30 Kgal Tank inlet solenoid valve at the local valve control panel. If performing electrical or mechanical work in the solenoid valve area, lock out and tag valve power at the circuit breaker panel CP.

2. Shut down and lock out the package plant influent pump operation at the PTS panel.

3. Package treatment system control operation is switched from the automatic mode to manual operation mode at the PTS control panel. If the package system is left in automatic mode under gravity feed operation, components such as the coagulant feed pumps and effluent pump will not run because the influent pump is locked out of operation. Switching to manual mode allows the coagulant pumps and effluent pumps to run without the influent pump activated.
4. Open the 30 Kgal Tank manual bypass valve.

5. Ensure the gravity flow to the treatment system is held at 85 gpm by adjusting the gravity inlet flow rotameter at the package treatment system inlet. Also check to ensure that the flow control valve at the uphill storage tanks oil water separator is set at or below 85 gpm.

5.6 WATER TREATMENT FACILITY OPERATION

The water treatment facility equipment is separated into the following control components:

- Package Treatment Plant (clarifier, mixed media filter, coagulant feed pumps, turbidity meters, influent and effluent pumps)
- GAC Adsorption Columns
- Disinfection Feed Equipment (recirculation pumps , hypochlorite feed pumps, and chlorine residual analyzers)

5.6.1 Package Treatment Plant Operation

The package plant contains the following control components:

- Clarifier
- Mixed media filter
- Coagulant feed pumps
- Turbidity meters
- Influent and effluent package plant pumps

5.6.1.1 Normal Operation (Automatic)

Under normal operations the package plant control equipment operates in automatic mode. Raw water is fed to the package system from the 30 Kgal Tank by the influent pump. Raw water entering the package plant system is dosed with coagulant chemical, passed through a static mixer, and then fed into the package plant adsorption clarifier. Effluent from the clarifier is then passed through a mixed media filter. Effluent from the filter is pumped by the effluent pump to the GAC columns. In automatic mode the influent pump is activated based on raw water levels in the 30 Kgal Tank and 375 Kgal Tank. Package plant coagulant chemical feed pumps and the effluent pump are activated only when the influent pump is operating. The hypochlorite feed pump, which provides feed to the GAC outlet, operates only when the effluent pump is activated unless the hypochlorite feed pump is set to operate manually when the package treatment plant is receiving flow directly from the uphill storage tanks.

For normal operation, coagulant and hypochlorite feed pump rates are adjusted from preset values manually. The chemical feed rates can be adjusted automatically by the package plant controller based on influent turbidity readings, but automatic dose control operation is not recommended because influent raw turbidity is expected to be constant. The package plant manufacturer recommends a 3-10 mg/l Alum dose and a 0.05 mg/l polymer dose for average recorded raw water turbidity at the site of 1.9 NTU. Alum and polymer doses should be adjusted however based on field experience and observations. Hypochlorite feed is adjusted to maintain a 0.7 mg/L chlorine residual in the 375 Kgal Underground Storage Tank. Chemical pump flow setting information is supplied in the Appendix.

5.6.1.2 Alternate Operation (Manual)

If raw water is bypassed around the 30 Kgal storage tank and fed directly to the package treatment system, the package system must be manually operated. The chemical feed pumps are activated manually and feed rates are set manually during the direct feed of raw water to the package treatment system. The influent pump operation is disabled and the effluent pump is operated in manual mode.

5.6.1.3 Backwash Operation

Backwash of the clarifier and/or filter is activated automatically based on high media head loss measured by pressure sensors installed inside the clarifier and filter. The package plant controller activates the backwash cycle for the unit that has its preset head loss level achieved. The controller is also programmed to initiate a backwash cycle of the filter and clarifier, if the GAC effluent turbidity meter reading exceeds a preset value. In order to backwash the clarifier and/or filter of the package system, the entire water treatment facility is taken off line. The backwash is initiated when the package plant controller closes the inlet and outlet isolation motorized valves to the package system and opens the motorized valve on the backwash water supply line to the package system. The backwash water supply line receives pressurized flow from the distribution system pneumatic tank. During a specified time in the backwash cycle, an air blower is also activated to air scour the clarifier and filter media. The air scouring start time and duration is programmed at the package plant controller. The backwash operation can also be manually started.

5.6.1.4 Startup

To start up the system under automatic operation perform the following steps:

1. Ensure that the manual inlet and outlet valves for the package treatment system are open.

2. Ensure that valves (polymer, alum, hypochlorite) on the chemical feed discharge pump pipes are open.

3. Ensure that adequate chemical is available in the chemical storage tanks.

4. Ensure that the solenoid valves at the oil-water separator and 30 Kgal tank are set to automatic operation.

5. Ensure that the GAC columns are set to automatic operation and are set in the correct flow series sequence(see Section 5.6.2).

6. Set the influent pump, effluent pump for automatic operation at the PTS control panel. Ensure that the chemical feed pump operation is set to automatic locally at the pumps. Ensure that power is available to the pumps by inspecting the circuit

breaker panel CP. Activate the chemical feed pumps automatic operation locally and the influent and effluent pumps automatic operation at the PTS control panel.

Note that if the package treatment system is receiving raw water by direct feed, (30 Kgal underground storage tank is bypassed) the chemical pumps must be taken off automatic mode and operated manually. The package treatment system influent pump must also be shut off and locked out of automatic operation to allow manual operation of the package treatment plant. The effluent pump for the package treatment system should be also set to manual operation.

5.6.1.5 Shutdown

To shut down the package water treatment system for emergency situations or repair, conduct the following steps:

1. Power down the package plant system at the local control panel PTS. For extended shut downs or if work is to be performed on mechanical or electrical equipment, lock off and tag the power supply at circuit breaker panel CP.

2. Ensure that the influent, effluent and chemical feed pumps are shut down. If work is to be performed on mechanical or electrical equipment, lock off and tag the power supply to the pumps at circuit breaker panel CP.

3. Close the manual inlet and outlet valves to the package system to isolate it from the 30 Kgal Tank and the GAC columns.

4. At the respective local control panels, close the inlet solenoid valves at the oil water separator and 30 Kgal underground storage tank.

5. Make sure that the the off-site potable water feed to the 375 Kgal underground storage tank is set to automatic operation.

6. Refer to the manufacturer's O&M manual for proper storage of the clarifier and filter media during short or long term shut downs.

7. If shut down is to be for an extended period, it may be advisable to rinse out remaining chemical solutions held in the chemical feed storage tanks and dry tanks in preparation for new chemical feed solutions.

8. Conduct necessary maintenance.

9. Refer to section 5.6.1.4 to restart the package treatment system.

5.6.2 GAC Column Operation

A local control panel at the GAC columns is used to manipulate the closed or open position of the inlet, outlet and flow arrangement (parallel flow vs. series flow) motorized valves.

5.6.2.1 Normal Operation

The GAC columns operate normally in a series flow pattern and only when the package plant system is operating. When the package system is shut down or is being backwashed, the GAC motorized valve system isolates the column inflow and outflow points from the package plant backwash flow.

5.6.2.2 Backwash Operation

On a rotating basis one of the GAC columns is backwashed on a timed interval. The time interval is set at the GAC local control panel. When a GAC column is backwashing, flow from the package treatment plant is automatically directed to the remaining on-line GAC column.

5.6.2.3 Startup

To start up the GAC columns under normal operation conduct the following:

1. Ensure that the manual inlet and outlet valves to the column system are open.

2. Ensure the motorized valves are open to allow parallel or series flow operation of the columns. Valves may need to be set to allow parallel flow operation of the columns when one column is down for maintenance. Flow configuration is set at the local GAC control panel.

3. Ensure that the column motorized valves operation is set to AUTO at the GAC local control panel to allow automatic isolation of the GAC columns during a package treatment system or GAC column backwash.

5.6.2.4 Shut Down

If both GAC columns are shut down for maintenance, the package water treatment system is also shut down (refer to Section 5.6.1.5). If only short term maintenance is expected, such as carbon sampling (performed yearly) then one column is taken down at a time. Flow from the package plant is directed to the remaining on-line column. To minimize shut down times for each column, schedule maintenance and GAC sampling work to occur at the same time. To shut down a GAC column perform the following steps:

1. Close appropriate inlet and outlet valves to the GAC column to be shutdown.

2. Disable power to the GAC system at the local control panel.

3. Refer to the manufacturer operation and maintenance guide for storage and care of the carbon media during short or long term shut downs.

4. If full shut down of the GAC columns is required, shut down the package water treatment system as outlined in Section 5.6.1.5. For a full shut down lock out and tag the power supply to the columns at the circuit breaker panel CP.

5.7 DISINFECTION SYSTEM OPERATION

The disinfection control system consists of the sodium hypochlorite feed pumps and the 375 Kgal underground storage tank recirculation pumps.

5.7.1 Normal Operation

Sodium hypochlorite is fed simultaneously to the GAC effluent pipe and at the recirculation pump discharge point by two separate feed pumps. The feed rates to these dose points are adjusted manually at the respective feed pump. The hypochlorite feed rates are adjusted to establish a 0.7 mg/l free chlorine residual in the 375 Kgal underground storage tank. The hypochlorite feed pump settings need to be checked daily. Feed rate is adjusted accordingly if the measured tank chlorine residual is more or less than 10% off the required residual value. Pump settings required to achieve the dose rates are provided in the Appendix.

Under normal operations both recirculation pumps are operating. Each pump serves a compartment of the tank. As an alternate operation, the recirculation pumps can be valved so that both pumps can draw from and feed to the same compartment or draw only from one compartment and feed only to the other compartment.

The recirculation pump discharge continuously receives hypochlorite feed to maintain the 375 Kgal tank chlorine residual. For protection, the recirculation pump will automatically shutoff when the water level in the storage tank drops below a LOW level setting. The chlorine residual analyzer installed on the recirculation pump discharge lines continuously monitors the chlorine level in the flow drawn from the 375 Kgal underground storage tank. This residual chlorine concentration reading is then used as an aid to manually adjust the hypochlorite feed rate into the 375 Kgal storage tank.

5.7.2 Recirculation Pump Startup

Startup of a recirculation pump is accomplished by performing the following steps:

1. Ensure the inlet and outlet valves to the pump are open.

2. Ensure that the valves on the suction and discharge manifold lines are closed such that each pump mixes a selected compartment.

3. Ensure that power supply is available to the pump by inspecting MCC G1.

4. Activate the power to the pump at MCC G1.

5. Ensure that the valves on the hypochlrorite feed pipe (connected to the pump discharge pipe) are open.

6. Ensure the hypochlorite feed pump serving the recirculation pump discharge is activated. See Section 5.7.3 for start up of the hypochlorite pumps

5.7.3 Hypochlorite Feed Pump Startup

1. Ensure that power is available to the hypochlorite feed pumps by inspecting the circuit breaker panel CP.

2. Ensure that valves on the hypochlorite feed lines are open to allow flow to the respective feed points.

3. Ensure that there is fresh hypochlorite feed solution in the storage tank.

4. Turn on the feed pumps locally. Set the operation of the hypochlorite feed pump serving the GAC outlet feed point to automatic operation locally at the pump. Under automatic operation the GAC outlet feed point will only operate when the package treatment system effluent pump is operating. The hypochlorite pump feeding the recirculation pump discharge feed points can only be operated in manual mode.

5. Verify hypochlorite feed rates using calibration chamber on each pump suction pipe.

5.7.4 Recirculation Pump Shut Down

To allow repair or maintenance of one of the two recirculation pumps, the recirculation pump remaining in operation must be valved to mix both the compartments of the 375 Kgal storage tank. Follow the steps below in order to shut down one recirculation pump and have the remaining pump circulate the contents of the two tank compartments:

1. Turn off and lock and tag the pump selected for shut down.

2. Disconnect the power supply for the pump selected for shut down at MCC G1, lock and tag.

3. Close the suction and discharge valves for the pump selected for shut down.

4. Open the manifold pipe discharge valve and the manifold pipe suction valve to allow the pump remaining in operation to draw flow from and discharge to each tank compartment simultaneously.

5. Perform maintenance or repair on the shut down pump according to manufacturers instructions.

6. Start the repaired or shut down pump as described in Section 5.7.2.

5.7.5 Hypochlorite Pump Shut Down

1. Shut down the hypochlorite feed pumps locally.

2. If conducting electrical work shut down the power supply to the pumps at circuit breaker panel GP.

3. Close the valves on the discharge pipes of the pumps.

4. For extended shut down periods, drain excess chemical remaining in the storage tank. Rinse the storage tank clean.

5.8 375 KGAL UNDERGROUND STORAGE TANK OPERATION

The 375 Kgal underground storage tank stores finished water from the water treatment facility for potable water distribution and fire fighting requirements. The level in the storage tank is controlled by a ultrasonic level indicator and the pressure in the pneumatic tank. The tank is divided into two compartments. Backup potable water supply feeds directly into the storage tank.

5.8.1 Normal Operation

Under normal operations both tank compartments are in operation and both compartments receive GAC column effluent.

The underground storage tank level indicator and alarm system notifies the operators on how much water is left in the tank for domestic demand (90,000 gallons will remain for fire usage, plus an additional buffer volume of 60,000 gallons, resulting in a total volume of 150,000 gallons that must remain in the tank at all times. The water levels and corresponding fire and domestic water volumes available when both compartments are in operation (according to the Water and Fire Systems Project) are shown below:

Table 5-4. Tank Levels and Available Water with Both Compartments Operational

Reservoir Water Levels	Gallons Available for Domestic Use	Gallons Available for Fire Protection	Comments
6611.99	220046	312632	Top of Tank (Bottom of Rib)
6606.318	45006	137592	5 Day Alarm Level
6606.027	36007	128593	4 Day Alarm Level
6605.735	27004	119590	3 Day Alarm Level
6605.443	18002	110588	2 Day Alarm Level
6605.152	9002	101588	1 Day Alarm Level
6604.86	0	92586	Domestic Water Shutoff
6601.86	0	0	Fire Protection Water Shutoff

5.8.2 Tank Compartment Start Up

To start the operation of a tank compartment conduct the following steps:

1. Open the valve on the GAC feed line to the tank compartment to be operated.
2. Open the diffuser isolation valves.
3. Ensure automatic flow from the off-site potable water source is activated by setting the operation of the motorized butterfly supply valve to automatic.
4. Start the recirculation feed pump as described in Section 5.7.2.
5. Start the hypochlorite feed to the recirculation loop.
6. Open the 24-inch tank compartment outlet valve.

5.8.3 Tank Compartment Shut Down

A tank compartment may be shut down for cleaning, painting, level sensor repair or recirulation diffuser maintenance. Maintenance in a tank compartment should only commence if the remaining operating compartment can satisfy fire flow demands. During any time 90,000 gallons of water should always be available in the remaining operating compartment to satisfy fire demands. The water levels and corresponding fire and domestic water volumes available for one compartment in service (according to the Water and Fire Systems Project) are shown in the following table:

Table 5-5. Tank Levels and Available Water with One Compartment Out of Service

Reservoir Water Levels	Gallons Available for Domestic Use	Gallons Available for Fire Protection	Comments
6611.99	63730	156316	Top of Tank (Bottom of Rib)
6610.78	45006	137592	5 Day Storage Level
6610.19	36007	128593	4 Day Storage Level
6609.61	27004	119590	3 Day Storage Level
6609.03	18002	110588	2 Day Storage Level
6608.44	9002	101588	1 Day Storage Level
6607.86	0	92586	Domestic Water Shutoff
6601.86	0	0	Fire Protection Water Shutoff

Follow the steps below to shut-down one compartment:

1. Close the valve on GAC effluent pipe to the compartment to be shut-off.

2. Make sure the flow from the off-site potable water source is turned off. Lock out the operation of the motorized off-site potable water supply motorized butterfly valve.

3. Close the 24-inch tank outlet isolation valve.

4. Shut off the hypochlorite feed to the recirculation loop being shut-down.

5. Shut down and lock out the recirculation pump serving the compartment.

6. Shut-down the recirculation pump locally and disconnect at the M.C.C. G1, lock and tag.

7. Close the inlet and outlet valves to the recirculation pump and close the isolation valves to the compartment recirulation diffuser.

8. Drain the compartment.

9. Perform necessary maintenance and repair.

10. Clean the tank, dispose of wash water according to airport procedure.

11. Refer to Section 5.8.2 for restoring the tank compartment to operation.

5.8.4 Off-site Potable Water Feed

If the water level in the 375 Kgal tank drops below a preset level, the backup potable water flow to the tank is automatically activated by opening the off-site potable water motorized control valve.

5.8.4.1 Off-site Potable Water Feed Startup

Conduct the following steps to activate the potable water feed:

1. Check to ensure that the manual shut off valves for the motorized off-site potable water supply valve in the distribution pump valve chamber are open.

2. Ensure that the valve on the motorized valve bypass line is closed.

3. Set the operation of the motorized off-site potable water supply valve to automatic at the WS control panel or locally at the valve.

5.8.4.2 Off-site Potable Water Feed Shutdown

Conduct the following steps to stop off-site potable water feed to the 375 Kgal underground storage tank:

1. Set the motorized butterfly operation to manual. Close the valve at the WS panel or locally at the valve.

2. If the valve is to be serviced close the manual isolation valves at the inlet and outlet of the motorized valve.

3. If off-site potable water supply flow to the 375 Kgal underground storage tank must continue during a motorized valve shutdown, open the valve on the motorized valve bypass line. During the bypass operation around the motorized valve water levels in the 375 Kgal underground storage tank are to be closely monitored to prevent tank overflow.

5.8.5 Automatic Tank Inlet Feed Shutdown

When the potable water level in the 375 Kgal underground storage tank goes above a preset HIGH level, the influent pump to the package treatment system and the butterfly control valve on the backup potable water transmission line are automatically closed as long as both valves are set to automatic control.

5.9 MISCELLANEOUS SYSTEMS

5.9.1 Emergency Eyewash

The laboratory emergency eye wash system is manually activated. The activation of the laboratory eyewash triggers an alarm on the water system control panel and the auto pager system dials the remote operator to report the alarm.

5.9.2 Chemical Storage

The cabinets are to be kept closed when not in use.

5.9.3 Reuse Water Supply

Reuse water is not currently used at the Airport. When reuse water systems are implemented at the airport the creation of cross-connections between the reuse water system and the potable water system will not be allowed.

6 LABORATORY CONTROLS

6.1 INTRODUCTION

The plant personnel incorporate as a part of their routine a schedule for sampling and analysis of finished potable water to meet the SDWA regulations. A schedule for sampling and analysis of process streams is to be followed, and a log is kept of critical process parameters as required by ADEQ. The laboratory controls required to satisfy SDWA regulations and record critical process parameters are discussed in this Section.

6.2 SDWA REGULATIONS

The water supply and treatment facilities at the Grand Canyon National Airport have been classified as "Public Community Small Water System." The water supply and treatment facilities have to meet both existing and future Environmental Protection Agency drinking water quality regulations as well as State Drinking Water Regulations (Arizona Administrative Code, Title 18, Chapter 4, Safe Drinking Water, attached in Appendix). The SDWA currently regulates inorganic chemicals, organic chemicals, microbiological contaminants and disinfection by-products. Proposed regulations which may take effect in the future include the arsenic rule, radio nuclides, the sulfate rule, the microbial/DBP "Cluster" of Rules, the enhanced surface water rule, the groundwater disinfection rule, the filter backwash recycling rule and the source water protection rule. The existing and future rules specify limitations as maximum contaminant levels (MCLs), Action Levels or Best Available Technology (BAT).

Table 6-1 summarizes the initial laboratory sampling and analysis schedule required to satisfy current water quality regulations. The monitoring frequency of various contaminants could vary based on the analysis results of the system. The monitoring frequency may increase if the analysis shows exceedances. Similarly, the monitoring frequency may decrease if the water system shows repeated compliance. These and other detailed requirements are discussed in Arizona Administrative Code, Title 18, Chapter 4, Safe Drinking Water, included in the Appendix.

Table 6-1. Laboratory Sampling and Analyses Schedule

Contaminant	MCL, mg/L (unless otherwise noted)	Frequency	Existing or Future
MICROBIAL CONTAMINANTS			
Coliform (fecal, e-coli and total)	No more than one sample positive per month	Three samples per month	Existing
Giardia	3-Log Inactivation	None	Existing
Viruses	4-Log Inactivation	None	Existing
Turbidity	Conventional Filtration 0.5 NTU	Continuous or Four grab samples daily	Existing
Cryptosporidium	Zero	Based on Continuous Turbidity Monitoring	Future

Table 6-1. Laboratory Sampling and Analyses Schedule (cont'd)

Contaminant	MCL, mg/L (unless otherwise noted)	Frequency	Existing or Future
INORGANICS			
Antimony	0.006	Once a quarter	Existing
Arsenic	0.05 0.002 to 0.02	Once a quarter	Interim Future
Asbestos	7 MFL (million fibers (>10 um) per liter)	Once every nine years	Existing
Barium	2	Once a quarter	Existing
Beryllium	0.004		Existing
Cadmium	0.005		Existing
Chromium (total)	0.1		Existing
Cyanide (free)	0.2		Existing
Mercury	0.002		Existing
Nickel	0.1		Existing
Nitrate N	10	Once every year	Existing
Nitrite N	1		Existing
Nitrate + Nitrite N	10	Once every quarter	Existing
Selenium	0.05	Once a year	Existing
Thallium	0.002		Existing
Lead	0.015 (Action Level - In no more than 10% of tap water samples)	Every six months	Existing
Copper	1.3 (Action Level - In no more than 10% of tap water samples)	Once six months	Existing
Fluoride	4.0	Once a year	Existing
Sulfate	500	Not available	Future
RADIO NUCLIDES			
Gross Alpha Emitters	15 pCI/L	Quarterly samples every 4 years	Existing
Gross Beta Particle and Photon Emitters	4 mRem		Existing
Radium - 226	20 pCi/L		Future
Radium - 228	20 pCi/L		Future
Radon	300 pCi/L		Future
Uranium	20 ug/L (equivalent to 30 pC/L)		Future

Table 6-1. Laboratory Sampling and Analyses Schedule (cont'd)

Contaminant	MCL, mg/L (unless otherwise noted)	Frequency	Existing or Future
VOLATILE ORGANIC COMPOUNDS			
Benzene	0.005	Original quarterly for first three years and then once every 3 years	Existing
Carbon Tetrachloride	0.005		Existing
o-Dichlorobenzene	0.6		Existing
para-Dichlorobenzene	0.075		Existing
1,2-Dichloroethane	0.005		Existing
1,1-Dichloroethylene	0.007		Existing
cis-Dichloroethylene	0.07		Existing
trans-Dichloroethylene	0.1		Existing
Dichloromethane	0.005		Existing
1,2-Dichloropropane	0.005		Existing
Ethylbenzene	0.7		Existing
Monochlorobenzene	0.1		Existing
Styrene	0.1		Existing
Tetrachloroethylene	0.005		Existing
Toluene	1		Existing
1,2,4-Trichlorobenzene	0.07		Existing
1,1,1-Trichlorobenzene	0.2		Existing
1,1,2-Trichloroethane	0.005	Original quarterly for first three years and then once every 3 years	Existing
Trichloroethylene	0.005		Existing
Vinyl Chloride	0.002		Existing
Xylenes (total)	10		Existing
SYNTHETIC ORGANIC CHEMICALS			
Alachlor	0.002	Original quarterly for first three years and then once every 3 years	Existing
Atrazine	0.003		Existing
Benzo(a)pyrene	0.0002		Existing
Carbofuran	0.04		Existing
Chlordane	0.002		Existing
2,4-D	0.07		Existing
Dalapon	0.2		Existing

Table 6-1. Laboratory Sampling and Analyses Schedule (cont'd)

Contaminant	MCL, mg/L (unless otherwise noted)	Frequency	Existing or Future
Dibromochloropropane (DBCP)	0.0002		Existing
Di(2-ethylhexyl)adipate	0.4		Existing
Di (2-ethylhexyl) phthalate	0.006		Existing
Dinoseb	0.007		Existing
Diquat	0.02 (0.1 EPA)		Existing
Endothall	0.1		Existing
Endrin	0.002		Existing
Ethylene dibromide (EDB)	0.00005		Existing
Glyphosate	0.7		Existing
Heptachlor	0.0004		Existing
Heptachlor epoxide	0.0002		Existing
Hexachlorobenzene	0.0001	Original quarterly for first three years and then once every 3 years	Existing
Hexachlorocyclo-pentadiene	0.05		Existing
Lindane	0.0002		Existing
Methoxychlor	0.04		Existing
Oxamyl	0.2		Existing
Pentachlorophenol	0.001		Existing
Picloram	0.5		Existing
Polychlorinated , Biphenyls (PCBs)	0.0005		Existing
Simazine	0.004		Existing
2,3,7,8-TCDD (Dioxin)	3×10^{-8}		Existing
Toxaphene	0.003		Existing
2,4,5-TP (Silvex)	0.05		Existing
DISINFECTION BY-PRODUCTS			
Total THMs	0.080	Quarterly	Future
Haloacetic Acids (5)	0.060	Quarterly	Future
Chlorite	1.0	Quarterly	Future
Bromate	0.10	Quarterly	Future

6.3 SAMPLING AND ANALYSIS

The sampling and analytical procedures for various parameters are described in the Drinking Water Sampling Guide published by Arizona Department of Environmental Quality (ADEQ) in July 1995. A copy of the guide is included in the Appendix. The manual is also published on the web. Please refer to http://www.adeq.state.az.us/water/safe/guide.htm or call ADEQ for the most current version of the manual.

A state licensed laboratory must perform most of the compliance water quality analyses. The water quality analyses which do not require a licensed laboratory are turbidity, chlorine residual, temperature, conductivity, pH, alkalinity, calcium hardness, orthophosphate and silica. These analyses may be performed by an operator or a representative of the water system *(Refer to Rule R18-4-107)*.

The term "certified" laboratory is often used in place of "licensed" laboratory. However, the state rules use the term "licensed." Laboratories are licensed for only those parameters for which they fulfilled all of the requirements. For example, a laboratory could have a license to analyze for coliform bacteria and not have a license for nitrate. Ask the laboratory to verify that they are licensed for the parameter that you require or call the Arizona Department of Health Services (ADHS) at (602) 255-3453 for verification. ADHS has a current list of licensed laboratories which is available on request.

7 RECORDS

7.1 INTRODUCTION

Process and operational performance records are an important element in the proper and efficient operation of water supply and treatment systems. Without past records, it would be difficult to identify trends in water supply and demand and process operation. Similarly, operating cost records are important to prepare meaningful budgets. Regulatory agencies require records to be submitted and kept on file for public health reasons. The importance of keeping accurate and organized records is vital for efficient operation of the Grand Canyon National Airport Water Supply and Treatment Facility, as well as to maintain compliance with current regulations.

Prepared forms are the most efficient method of keeping records. The forms should indicate the data needed and provide space for entering the information. Well designed forms decrease the possibility of errors, omissions and inaccuracies. Standard reporting forms published by ADEQ are included in the Appendix. Forms to record process and operational information should be prepared based on the required information to be maintained. Entries on the forms should be made with ink or indelible pencil so that the records are permanent.

Records should be kept for as long as they are useful. Some information will be useful for only a short time, while other information will be useful for years. Some records require official approval before they can be discarded. When a record is set up, decide the length of time information will be kept and set up a disposal schedule for each type of record maintained.

7.2 RECORDS TO BE SUBMITTED TO STATE AGENCIES

The State of Arizona requires that an operational and monitoring report be submitted on a monthly, quarterly or annual basis depending upon the water quality analyses conducted. Standard ADEQ reporting forms are included in Appendix. Forms not included with this manual are available by calling ADEQ at (800) 234-5677 or downloading forms from the ADEQ website at http://www.adeq.state.az.us. The forms are to be completed on a daily basis for all tests performed on that specific day. The testing schedule is discussed in Chapter 6. Reports to be submitted to ADEQ include, turbidity, residual disinfectant concentration, inorganic and organic chemical concentrations listed in chapter 6, radiochemicals concentration, and microbiological analysis. At the end of each month, the completed form should be forwarded to:

Arizona Department of Environmental Quality
Data Unit, Drinking Water Compliance
3033 North Central Avenue,
Phoenix, Arizona 85012

A copy of the monthly state report should be kept on file and if possible entered into a spreadsheet or database. Periodic review of these reports provides information on trends in system performance.

7.3 RECORDS TO BE KEPT ON FILE

7.3.1 Process Operation Records

Operational records including but not limited to all process flows, chemical doses, tank levels, etc. should be maintained on file.

7.3.2 Maintenance Records

An effective preventive maintenance program is essential to keep equipment in good operating condition and avoid major problems. Good record keeping of maintenance and repair on a daily basis is the suggested way to keep track of the system. An equipment record form (see Section 8.2) shall be maintained to record information (dates, equipment serviced, actions performed, parts replaced, type of equipment calibrated, calibration standards used, etc.) on repairs and calibration of equipment.

7.3.3 Financial Records

Financial records including operating costs and maintenance expenses should be kept on file. These records provide the basis for determining the budget for the system. Operating costs should include labor, utilities, supplies and miscellaneous expenses. Maintenance expenses should include equipment purchase, replacement, repair and related expenses.

7.3.4 Emergency Condition Records

All emergencies should be recorded and kept on file.

8 MAINTENANCE

8.1 GENERAL

The purpose of a good maintenance program is to swiftly repair malfunctioning equipment, reduce breakdowns, extend equipment life, and reduce labor and equipment costs. The maintenance program organizes equipment schedules and manufacturers' equipment maintenance literature as an aid in providing scheduled and unscheduled maintenance.

The maintenance program consists of maintenance service, record system, warranty provisions, and supplemental manufacturers' operation and maintenance provisions. Maintenance tasks generally fall into four service categories, 1) general plant maintenance, 2) scheduled (preventative) maintenance, 3) unscheduled (corrective and emergency) maintenance and 4) major repairs.

Cleaning, maintenance and repair on all equipment, structures, valves, piping and appurtenances shall be performed only after the corresponding item has been isolated. All equipment under pressure or with electric power should follow proper LOCK OUT/TAGOUT procedures prior to conducting cleaning, maintenance or repair.

Maintenance and repair of all equipment including pumps, oil/water separator, PAH/BTEX analyzer, packaged treatment system, etc. shall be performed according to manufacturers Operation and Maintenance Manual. Routine maintenance shall be scheduled and performed according to manufacturer's recommendations. Cleaning and maintenance of storage tanks and especially the 375 Kgal finished water storage tank should be conducted according to procedures outlined in ADEQ Engineering Bulletin Number 9. All replacement or new materials and parts (valves, piping, fittings, and coatings) used in potable water production shall meet National Sanitation Foundation Standard Number 61.

8.1.1 General Plant Maintenance

Preventative maintenance is required throughout the plant to provide safe working conditions, protect structures, and present an attractive plant site.

1. The plant should be neat, clean and maintained at all times. All areas, both inside and outside, should be kept free of debris, screenings, spilled chemicals, and fuel and dirt accumulations.

2. Semi-annual inspections should be made of all structures, roadways, and walkways. If inspections reveal signs of deterioration, repairs should be scheduled for prompt completion. Weekly inspections should be made for general cleanliness, so that housekeeping tasks are not neglected.

3. Surfaces of walls, machinery, equipment, floors, and ceilings should be protected from humidity and chemicals. Before applying protective coatings, all surfaces must be repaired, if necessary, and cleaned. Metal surfaces must be prepared and primed prior to coating.

(1) General Metal - Rust, oil, grease, and dirt should be removed with solvents and wire brushes.
(2) Galvanized Metal Surfaces - After cleaning with solvent, coat surfaces with a zinc rich paint suitable for galvanized metal.
(3) Paint Application - Protective surface coating should not be applied when the ambient temperature is below 50 degrees F, when the relative humidity is greater than 60 percent, or when there is dust in the air. Sufficient heat and ventilation should be provided to keep the atmosphere and all surfaces dry and warm until each coat has hardened. Areas where coatings are being applied should be properly ventilated to protect personnel from inhaling noxious fumes that may be produced by the coating materials. Where appropriate, explosion-proof electrical equipment and non-sparking tools should be used to prevent ignition of flammable vapors.

8.1.2 Scheduled Maintenance

Scheduled Maintenance is work done to prevent breakdown, reduce wear, improve efficiency, and extend the life of equipment and structures. These are routine maintenance functions usually performed while the plant is in operation. Scheduled maintenance requirements must be determined and incorporated into a program which allows these tasks to be planned as part of the normal flow of work. These tasks generally include periodic inspection, lubrication, servicing, and minor equipment adjustments. All scheduled maintenance should be simple, reliable, and accurate. A sound scheduled maintenance program need not be elaborate to affect reductions in downtime and expensive untimely repairs and replacements.

It is essential that maintenance be planned and scheduled so that there is no idle time or peak work load, and there is minimum interruption of service. Execution of scheduled maintenance tasks should become a daily routine, familiar to plant staff.

Plant staff may choose to modify some of the procedures described herein, but the important point is to establish a comfortable but efficient procedure which becomes a familiar routine task. After the plant is in operation for a period of time, the scheduling burden may be eased by preparing a checklist of preventive maintenance tasks required on a regular basis.

Planning and scheduling preventative maintenance is a continuous function. It must take contingencies into account and scheduling must be flexible enough to handle non-routine corrective maintenance, major repairs and emergencies.

8.1.3 Unscheduled Maintenance

Unscheduled Maintenance is work required for repair of worn or broken parts and other non-routine maintenance functions. In general, these tasks may also be performed while the plant is in operation but may require some equipment downtime.

8.1.4 Major Repairs

Major Repairs or alterations are tasks generally requiring equipment to be out of service for an extended period of time. These repairs generally require additional support personnel or outside contractors for aid or to accomplish the required repairs. Although anticipating the need for major repairs can be difficult, the routine checks and inspections required during proper scheduled maintenance can often provide some measure of advanced warning of equipment failure.

Clearly, the efficiency of a maintenance program may be measured by its success in minimizing the impact of unscheduled maintenance and major repairs. The means to this goal is sound scheduled maintenance. Therefore, although this chapter presents guidelines applicable to an overall maintenance management system, the emphasis is on scheduled maintenance.

8.2 EQUIPMENT RECORD SYSTEM

An equipment record system is required to maintain and organize information on each item of equipment requiring maintenance and calibration. A sample equipment record is provided in Table 8-1. A separate record is used for each item of equipment. The records should be stored in a file drawer or box in either alphabetical order or by tag number.

Unscheduled maintenance and major repair work should also be noted on the Equipment Record to provide a complete record. These records should be updated with the same information whenever an item of equipment is changed, added, or deleted.

8.3 STOREROOM AND INVENTORY RECORD

It is both frustrating and inefficient for equipment to be out of service, or for scheduled maintenance to be halted, because parts or materials are not available. A supply of spare parts, lubricants and other maintenance supplies should be maintained and inventoried at all times. All storeroom items should be numbered or otherwise identified and listed in an Inventory Record.

The Inventory Record should list the name of the item, supplier(s), unit cost, intended usage of the item, the quantity on hand, and the minimum quantity to be kept on hand.

8.4 MAINTENANCE COSTS AND BUDGETS

Maintenance service, equipment records and inventory records, if properly maintained and recorded, provide the necessary information to develop a maintenance budget and personnel requirements. Time and expenses should be separately accounted for scheduled maintenance, unscheduled maintenance, major repairs, and normal operations. In this way, management may compare the scheduled maintenance man-hours and costs to those for unscheduled maintenance to determine if the preventative maintenance is satisfactory, insufficient, or excessive.

Table 8.1. Sample Equipment Record

GRAND CANYON NATIONAL PARK AIRPORT
WATER SUPPLY AND TREATMENT FACILITY
SAMPLE EQUIPMENT RECORD

WEEK / MONTH	1 2 3 4 JAN	1 2 3 4 FEB	1 2 3 4 MAR	1 2 3 4 APR	1 2 3 4 MAY	1 2 3 4 JUNE	1 2 3 4 JULY	1 2 3 4 AUG	1 2 3 4 SEPT	1 2 3 4 OCT	1 2 3 4 NOV	1 2 3 4 DEC
SCHEDULED MAINTENANCE PROGRAM							EQUIPMENT TAG NO.					
EQUIPMENT DESCRIPTION												
NAME:							SIZE:					
LOCATION:							MODEL:					
VENDOR:							TYPE:					
VENDOR ADDRESS:							SERIAL NUMBER:					
VENDOR REP:				PHONE:								
INITIAL COST:				DATE:								

WORK TO BE DONE:	FREQUENCY	TIME
INSPECT:	DAILY	
	WEEKLY	
	MONTHLY	
CALIBRATIONS:	SEMI-ANNUAL	
	ANNUALLY	
	MONTHLY	
LUBE:	SEMI-ANNUAL	
	ANNUALLY	

DATE:	WORK DONE:	SIGNED:	DATE:	WORK DONE:	SIGNED:	DATE:	WORK DONE:	SIGNED:

8.5 EMERGENCY REPAIRS

In emergency conditions involving key units, these units should not be shut down unless there is a safety reason or other need prior to the start of repair work. Before initiating work, the sequence of steps to complete the task should be developed. Proper planning and scheduling will ensure that sufficient personnel, proper equipment, and parts will be available to accomplish the task and minimize the actual downtime for an item of equipment.

8.6 MANUFACTURERS' OPERATION AND MAINTENANCE MANUALS

It is not the intent of this manual to reproduce all the information contained in the manufacturers' Operation and Maintenance manuals. This manual is intended to supplement those manuals with procedures for their use and to condense some of the information contained therein.

A manufacturer's manual has been provided for each major piece of equipment installed at the Grand Canyon National Park Airport Water Supply and Treatment System. These manuals should be catalogued and kept on file by the Plant Operator. They provide the best source of detailed information for preparing comprehensive scheduled maintenance procedures and for instructions to make equipment repairs, calibrations, and adjustments.

8.7 WARRANTY PROVISIONS

Major equipment installed in the plant is furnished with warranties. A separate file should be created for compiling these warranties in the order of the equipment tag numbers. The Plant Operator should carefully study the terms of these warranties and the applicable duration so that the equipment manufacturer/supplier can be contacted for maintenance, repair, and/or replacement if a major equipment breaks down within the warranty period.

8.8 RECORD DRAWINGS

At the completion of construction, a set of Record Drawings were prepared and should be stored at the plant site. These plans indicate any change order or field modification work which was performed during construction. They should be modified as necessary whenever plant personnel revise any of the equipment or structure at the plant to maintain or improve future operation.

The record drawings should be reviewed prior to performing any major repair work, especially when structures, equipment pads, pipe supports, or earthwork is involved. These drawings should be kept in the Plant Operator's office or in appropriate designated area.

8.9 TROUBLESHOOTING

The purpose of this section is to list possible causes and remedies for process failure. Troubleshooting of specific equipment problems is not covered in this section. To troubleshoot

specific equipment, refer to the manufacturer's troubleshooting guide included in their operations and maintenance manual.

Table 8-2. Troubleshooting List

ALARM or FAILURE	POSSIBLE CAUSE	ACTION
PAGER Alarm	Water Treatment Facility Failure OR Raw Water Storage System Failure OR Eyewash and Shower Activation Alarm OR Low Chlorine Residual Alarm	Check the Main Control Panel to determine area generating the alarm.
Eyewash and Shower Activation Alarm	Someone using eyewash or shower possibly due to contact with chemicals.	Investigate eyewash and shower area to identify the cause of activation. Perform necessary first aid and seek medical help. Acknowledge and reset the alarm.
Low Chlorine Residual Alarm	Hypochlorite Feed Pump Failure	Check if the hypochlorite feed pump is feeding the at the specified rate. Use backup pump if the pump in question requires repair.
	Empty feed tank or Hypochlorite Leak	Check if feed storage tank is empty. Check for hypochlorite leaks. Fix leak. Adjust chlorine feed rate.
	Diluted or Under- diluted Hypochlorite Feed	Check hypochlorite feed concentration using hygrometer. Adjust solution strength accordingly.
	High Chlorine Demand	Check turbidity for high chlorine demand. Take appropriate actions to decrease turbidity of treated water. Increase the hypochlorite feed rate at both distribution points. Check diffuser mixing.
Water Treatment Facility Failure	30 Kgal UST High Level Alarm	Check influent pump. Check operation of level sensor and float valve.
	30 Kgal UST Low Level Alarm	Check control valve. Check operation of level sensor and float valve.
	375 Kgal UST High Level Alarm	Check if the off-site potable water control valve is jammed open. Check operation of distribution pumps.

Table 8.2. Troubleshooting List (cont'd)

ALARM or FAILURE	POSSIBLE CAUSE	ACTION
	375 Kgal UST Low Level	Check if the off-site potable water control valve has failed to open. Contact off-site potable water supplier to check on off-site system failure. Check if there is flow from the water treatment facility.
	Packaged Treatment System Failure.	Check Packaged Treatment System Local Panel and follow Manufacturers instructions.
	Recirculation Pump Failure	Isolate and repair failed pump.
	High Effluent Turbidity	Check influent turbidity. Check coagulant pump operation and determine if coagulant feed storage tanks are full. Check the backwash cycle log of the package treatment system. Check filter to waste setting after backwash cycle.
	High Influent Turbidity	Inspect catchment area for source of the turbidity
Raw Water Storage System	Catchment Basin Pump Failure or Shutdown	Check Power to Catchment Basin Pump. Check Uphill Storage Tank levels. BTEX alarm is not relayed to main WS control panel. Check BTEX Analyzer Alarm at RTU unit.
	Catchment Basin Sump Low Level	Check pump operation. Check if suction pipe from sump to the pump is clogged
	Uphill Storage Tanks High Level	Check to ensure that tank outlet valves are open. Check level sensor operation. Check operation of flow control valve and control valve into the oil/water separator.
Raw Water Storage System	Uphill Storage Tanks Low Level	Check if the catchment basin pump is operating properly.
	High BTEX concentration alarm	Cease raw water feed to the treatment facility. Inspect the catchment basin for contamination sources. Conduct clean up operations where necessary.

8.10 CHEMICAL PURCHASING

Chemicals used in potable water production (interior tank coatings, feed chemicals such as alum, sodium hypochlorite, and others) must meet the requirements of National Sanitation Foundation Standard Number 60.

8.11 STORAGE AND DISPOSAL OF WASTE STREAMS

Wastes generated at the facility must be appropriately stored and disposed of according to current environmental laws. Current and significant waste streams at the water treatment facility include collected sludge and oil waste from the oil water separator (Section 3.2.1) beside the uphill storage tanks. Hazardous waste (Oil) and potentially hazardous waste (sludge) shall be collected from the oil water separator and disposed of by an USEPA certified waste management company. If waste must be stored on site temporarily before collection by the waste management company, then collected waste shall be stored in appropriate storage containers protected by double containment spill protection structures.

9 SAFETY

9.1 GENERAL

There are many different safety hazards in water supply and treatment facilities. Operators responsible for the system should be familiar with all of the hazards.

It is important to have a good safety record. A facility with poor safety record will indicate problems in other areas of operation. It also indicates that there is some fault or inadequacy in design, equipment, procedure, or employee placement or training.

The airport's standard safety procedures should be followed while operating the water supply and treatment system. Appropriate LOCKOUT/TAGOUT procedures should be adopted during cleaning, maintenance and repair of equipment and structures under pressure or powered by electricity. The confined space entry procedures adopted by the airport should be strictly followed while entering the storage tanks, catchment pump station or any other confined space.

9.2 ELECTRICAL HAZARDS

Contact with electricity can cause bodily injury ranging from loss of muscle control to complete paralysis of the central nervous system and can result in death. The degree of injury depends on the voltage. All voltages above 12 should be considered dangerous. All electricity should be treated with extreme caution without guessing as to the nature of the circuit.

9.2.1 Precautions

The following are general precautions.

1. Clearly mark all electrical controls.

2. Keep electrical controls accessible.

3. Keep a rubber mat on the floor in front of electrical panels; keep edges of the mat trimmed so it does not become a tripping hazard.

4. Never use metal ladders or metal tape measures around electrical equipment.

5. Ground all electrical equipment.

6. Equip portable power tools with ground wires and special outlet and plug.

7. Designate only authorized personnel to work on electrical equipment and repairs. Allow only these individuals to do the work. All electrical panels should have the following warning posted on the panel cover.

CAUTION: Unless you are a qualified electrician, stay out of the inside of all electrical panels. If you do not know, or are not familiar with the equipment, LEAVE IT ALONE.

8. Work in pairs around electrical equipment.

9. Avoid water pipes and drains when working near electricity.

10. Do NOT pass tools to or otherwise touch a person who is grounded.

11. Keep wires for portable electrical equipment form becoming a tripping hazard.

12. Do NOT use any part of your body to test a circuit.

13. Handle breaker wires as though they were "live" wires.

14. Always work from a firm base so that you don't lose your balance and fall on energized parts.

15. When working over an energized part, cover it with a good electrical insulator, such as a rubber blanket.

16. Do NOT make any safety devise inoperative unless it is absolutely necessary for repair or maintenance purposes. Before proceeding, alert all personnel.

17. If there is a question regarding any electrical hazard, ask about it before exposing yourself to it. Be continually aware of the hazard.

9.2.2 Work Procedures

The general rule is to work in pairs around electrical equipment. This is especially critical around equipment that operates at or above 440 V. The advantages of working in pairs includes a double check on each other: one person is available to de-energize circuits; and one can apply first aid or summon assistance in the event of a mishap.

The following procedures for holding and locking out electrical and mechanical equipment should be established:

1. Turn the unit off by means of a push-button lockout for momentary stoppage.

2. For major adjustments and repairs, turn off, lock out and tag the main circuit breaker.

(1) Fasten the tag securely to the breaker handle.

(2) The tag should read something like: "DANGER, DO NOT START, Man Working On Equipment".

(3) Note the time and date the unit was turned off, as well as the reason it was turned off.

(4) The tag should be signed by the man who turned the unit off.

NOTE: Your tag safety equipment supplier can obtain these tags for you.

3. No one should turn on the main breaker and start the unit until the tag has been removed by the person who placed it there, or until he has specific instructions from the person who tagged the breaker.

9.2.3 First Aid for Electrical Shock

Electrical shock can cause a serious emergency if it paralyzes the breathing center in the victim's brain or produces unconsciousness.

Steps for first aid treatment of electrical shock are as follows:

1. Free the victim from the live conductor promptly. Use a dry stick or other nonconductor. Never use bare hands.

2. Give the victim artificial respiration.

3. Keep the victim lying down and absolutely still.

4. Cover the victim only enough to prevent loss of body heat.

5. Obtain medical help immediately.

9.3 MECHANICAL HAZARDS

Much of the equipment in water treatment systems is electrically driven, but mechanical in its operation (pumps are a good example). Therefore, a combination of safety practices for both the electrical and mechanical aspects of the equipment must be followed. This section deals with the mechanical equipment hazards and related safety practices.

One of the hazards commonly associated with working with mechanical equipment is the possibility of physical injury. Among other things, injuries can be caused by moving machinery or by falls from or into tanks, deep wells, conveyors, catwalks, etc. The most common injuries are cuts,

bruises, burns, and broken bones. Most of these can be avoided with proper use of ladders, hand tools, and safety equipment and by following established safety procedures.

Employees should be properly trained in first aid procedures for injuries. It is also advisable to keep a book on first aid handy at all times.

9.3.1 Housekeeping

Good housekeeping is especially essential in the areas around equipment. Prevent cluttering of equipment areas to allow quick access for maintenance.

9.3.2 Working with Mechanical Equipment

As with electrical equipment, allow only authorized personnel to make the appropriate mechanical repairs.

Never work on the mechanical part of equipment without first locking out the unit at either a push-button lockout or the main circuit breaker of the control panel. Properly tag the breaker, as explained in the Section 9.2 - "Electrical Hazards".

9.3.3 Guards

Guards have been installed around all rotating shaft couplings, belt drives, gears, sprockets, chains, and other moving parts otherwise accessible.

Keep guards in place while equipment is in operation.

Never remove guards without first locking out or turning equipment off at the main breaker and tagging properly.

Always replace all guards before restarting equipment.

9.3.4 Railings and Safety Chains

If equipment areas are provided with railings, make sure they are properly anchored before leaning against them.

Make sure chains are always kept in place. Never lean against them or use them as a means of providing extra leverage for removing large amounts of material.

9.3.5 Loud Noise

Wear proper ear protecting devices whenever working in noisy areas for any length of time. Loud noises from engines and blowers can cause permanent hearing damage.

9.3.6 Tools

The following is a list of general guidelines which should be adhered to with regard to the use of hand tools.

1. Use the correct tool for the job.
2. Keep all tools in good condition.
3. Use tools in the correct way.
4. Keep and carry tools in safe places. Do NOT set or keep tools on overhead locations or ladders. Sharp-edged tools should NOT be left loose in boxes.

Portable power tools present the same typed of hazards as hand tools of the same kind. However, power tools are less easy to control and guard. The following is a list of general guidelines for safe use of portable power tools:

1. All electrical tools should be double insulated or grounded.
2. Do NOT use the electrical cord to lift or lower the tool.
3. Do NOT allow the cord to become a tripping hazard.
4. All employees should be trained in proper use of power tools.
5. Do NOT use power tools on which the guards have been removed.
6. When operating a power tool, wear protective apparel. Wear safety glasses or a face shield where chips or dust may fly. Do NOT wear gloves, ties, jewelry, or loose clothing around equipment that could "grab". Wear safety boots to prevent possible foot injury.
7. Wear a safety belt when working at an elevation to prevent falling.
8. All power tools held in the hand should be equipped with a spring-type switch so that constant finger pressure is necessary for the tool to operate.

Air powered tools provide hazards similar to those for electrical tools. In addition, they provide specific hazards of their own. Adhere to the following guidelines regarding the use of air powered tools:

1. Personnel should be trained in the safe and proper use of air powered tools.

2. Do NOT allow the air hose to become a tripping hazard.

3. Do NOT use the hose to lift or lower the tool.

4. Do NOT use air pressure equipment for cleaning, dusting, or horseplay. A serious accident could occur if these tools are misused.

5. A short chain with clamp should be used at each air hose connection to prevent the hose from whipping in case the connections separate.

6. Each pneumatic tool should be equipped with a trigger which must be depressed continually in order for the tool to operate.

7. In an area where pneumatic tools are used, eye and face protection should be worn by all personnel.

The above guidelines for working with tools are general in nature and not meant to be complete. Check with the manufacturer of the equipment for additional precautions and safety tips.

9.3.7 Lifting Equipment

The following precautions should be taken when using cranes to lift heavy equipment or materials.

1. Allow only trained and certified operators to operate lifting equipment.

2. Do NOT, under any circumstance, exceed the rated capacity of the crane. The rated capacity should be posted conspicuously.

3. Equip all crane hoist hooks with safety latches.

4. Hand signals should be used for safety and efficiency purposes. To avoid confusion, the crane operator should accept signals from one designated person. The signal man and crane operator must be able to see each other at all times. The signals must be fully understood and complied with at all times.

5. Attach taglines to loads which may swing or must go through a limited opening.

6. Lift loads only a few inches at first to check for balance before completing the full lift.

7. Be continuously looking for evidence of overload.

8. Do NOT allow anyone to stand under a load or near a cable, chain or rope under tension.

9. Never leave the lifting device while the load is suspended. Before the operator leaves, the load should be lowered and all power shut off.

Similar precautions should be taken when using a hand operated or electrically driven chain-fall lifting equipment supported on a tripod. Also, make sure the tripod is properly set and secured.

9.4 CHEMICAL HAZARDS

9.4.1 Chemical Hazards

The water supply and treatment system contains a number of chemicals which pose hazard to the operators. The chemicals stored and used in the treatment system include Sodium hypochlorite, Alum and Polymer. The operators should become thoroughly familiar with the safety and handling of these chemicals, as well as the hazards resulting from mixing two or more chemicals. Material Safety Data Sheets (MSDS) are attached in Appendix.

9.4.2 Sodium Hypochlorite

9.4.2.1 General

Sodium hypochlorite is used for disinfection of disease causing organisms in the water. It also helps control taste and odors in the water. Few materials of construction will withstand the highly reactive nature of sodium hypochlorite. As a general rule, no metals (with the exception of titanium and tantalum) should be allowed to come in contact with sodium hypochlorite. If sodium hypochlorite solution comes in contact with acid, toxic chlorine gas will be liberated, so great care must be taken to prevent sodium hypochlorite solution and acid from mixing. In addition, sodium hypochlorite has a high pH and will generate heat if it comes in contact with acid. Sodium hypochlorite decomposes when exposed to heat. A vigorous reaction along with a pressure build-up is possible if the product decomposes in the container.

9.4.2.2 Storage and Handling

1. Wear proper protective equipment when handling and loading. Equipment includes rubber gloves, goggles or face shield, rubber apron and rubber boots.

2. Keep storage area clean.

3. Use caution when working around chemical pumps and chemical pump discharge pipelines which may splatter or squirt sodium hypochlorite.

4. If sodium hypochlorite contacts eyes, immediately flush the eyes with large amounts of water for 30 minutes. Forcibly hold the eyelids apart to ensure complete flushing of all eye and eyelid tissue. Seek immediate medical help.

5. If the chemical contacts the skin, wash skin thoroughly for 15 minutes. Care must be taken to remove chemical from skin beneath nails. Contaminated clothing must be removed and washed before reuse. Seek immediate medical help.

6. If sodium hypochlorite is inhaled, leave the working area to an uncontaminated area immediately. Give artificial respiration if not breathing. Seek immediate medical attention.

7. If sodium hypochlorite is ingested, immediately give several glasses of water but do not induce vomiting. Drink as much water as possible. Seek immediate medical help.

8. Sodium hypochlorite solutions of 7% by weight or greater must be stored in vented containers to avoid pressure build-up. If venting rate is exceeded by the decomposition rate swelling of the container may be apparent.

9. Sodium hypochlorite solution is often shipped in 5 to 55 gallon drums. While these are considered shipping containers, the product may be stored in them prior to use. The drums must meet Department of Transportation specifications (and will be marked as such) and are generally manufactured of polyethylene. For 7% or greater solutions, one of the bungs must be fitted with a venting cap to preclude pressure buildup from the naturally evolving gasses. Drum spigots and other devices connected to the drum to facilitate off-loading should be conducted using materials compatible with the product.

10. Make sure that there is sufficient ventilation or use an approved gas mask while handling sodium hypochlorite greater than 7% strength.

11. Do not allow contact with organic materials such as rags, wood fibers, paper debris etc., or with reducing chemicals except under controlled conditions. Do not discard indiscriminately. A spontaneous combustion (fire) could result. Do not mix with acids, ammonia, alum, polymer or any other reducing agents. This may lead to release of toxic gases.

9.4.3 Aluminum Sulfate (Alum)

9.4.3.1 General

Alum is a coagulant used to remove turbidity from the water. Coagulation occurs when particles in the water are destabilized with the added coagulant to form flocs which are removed by filtration. Liquid alum is an aqueous solution of aluminum sulfate. Exposure of liquid alum to body tissue can cause irritation and burns. Ingestion can cause abdominal pain, nausea, and vomiting.

9.4.3.2 Storage and Handling

1. Wear proper respiratory equipment, chemical goggles or face shield, gloves, and clothing when handling or exposure to liquid alum. Respiratory equipment includes air purifying cartridge with particulate filter.

2. Keep the storage area clean.

3. Use caution when working around chemical pumps and chemical pump discharge pipelines which may splatter and squirt liquid alum.

4. If liquid alum contacts the eyes, flush with water for 15 minutes. Care must be taken to flush under the upper and lower eyelids. Seek immediate medical help.

5. If liquid alum contacts skin, flush with cold water for at least 15 minutes. Care must be taken to remove the chemical from the skin beneath nails. Contaminated clothing must be removed and washed before reuse. Seek immediate medical help.

6. If liquid alum vapor is inhaled, the person should be rapidly removed to fresh air.

7. If liquid alum is ingested, immediately induce vomiting. Seek immediate medical help.

8. See Material Safety Data Sheets for further chemical data.

9.4.4 Polymer

9.4.4.1 General

The purpose of polymer is to strengthen the floc, reducing floc breakup in the flocculation process, and aid filtration. Polymers are high molecular weight organic compounds used for water treatment. The polymers are typically non-hazardous. However they can react with other chemicals such as sodium hypochlorite and could result in the formation of toxic gases.

9.4.4.2 Storage and Handling

1. Wear proper protective equipment when handling and loading. Equipment includes rubber gloves, goggles (face shield), and protective clothing.

2. Keep the storage area clean.

3. Do not step on any wet surface at or near polymer storage and feeding areas. Wash down any spilled polymer thoroughly with water immediately.

4. Use caution when working around chemical pumps and chemical pump discharge pipelines which may splatter or squirt polymer.

5. If the polymer contacts the eyes, wash eyes thoroughly for 15 minutes.

6. If the polymer contacts the skin, wash skin thoroughly with soapy water.

7. Contaminated clothing must be removed and washed before reuse.

8. See Material Safety Data Sheets for further chemical data.

9.4.5 Chemical Compatibility

Sodium hypochlorite should not come in contact with either alum or the polymer. Alum being acidic will shift the pH of sodium hypochlorite below 7.0 resulting in evolution of toxic chlorine gas. Sodium hypochlorite being a oxidant will react with polymer which is reduced resulting in heat with possibility of ignition. Also, oxidation of the polymer could result in the formation of toxic gases.

10 UTILITIES

10.1 INTRODUCTION

This section lists the name and telephone number of different utility suppliers for the water supply and treatment system.

10.2 POWER

Electric power to the water supply and treatment system is provided by APS.

Customer Support: (800) 253-9405
Emergency: (800) 258-9408

10.3 TELEPHONE

Telephone services are provided by USWEST Communications.

Customer Support: (800) 603-6000
Repair: (800) 954-1211

10.4 BACKUP OFF-SITE POTABLE WATER SUPPLY

Backup potable water supply is provided by HYDRO RESOURCES

Contact: (520) 638-0116

10.5 WASTEWATER COLLECTION

The airport's sewer is collected by South Grand Canyon Sanitary District (SGCSD)

Contact: (520) 638-2463

10.6 REUSE WATER

The reuse water is supplied by South Grand Canyon Sanitary District (SGCSD)

Contact: (520) 638-2463

11 PERSONNEL

The water supply and treatment facilities are required to be operated under a Grade 2 water treatment system operator license (refer to Arizona Administrative Code - Title 18, Ch. 5) due to the size and nature of the water treatment system. Due to the specifics of the water source, it is preferable that the facility employ an on-site operator of Grade 2 classification to supervise the operations of the water supply and treatment systems. In case the remote operator is required, he/she must be within three travel hours to the facility to respond to emergencies and alarms. An on-site Grade 1 operator is also employed at the facility. The on-site operator is not required to monitor systems continuously. The on-site operator is required to immediately respond to any alarm conditions reported by the facility instrumentation and control automatic paging system.

12 DEICING SYSTEM

12.1 INTRODUCTION

Grand Canyon National Airport temperatures range from a minimum of 20 °F during winter to a maximum of 90 °F during summer months. Temperatures during the winter months of November through March are regularly below freezing point. Deicing of planes is critical during the winter months to prevent ice build up on aircraft surfaces. Deicing of planes is carried out only at the deicing facility located east of the intersection of taxiway "C" and taxiway "P". Deicing involves spraying aircraft with deicing liquid, propylene glycol. Propylene glycol lowers the melting point of water and thereby removes ice from the aircraft. The propylene glycol sprayed on the pad is collected in a sump and pumped into the wastewater collection system for treatment. A detailed site plan and section of the deicing system are provided in Figure 12-1 Deicing System Plan and Figure 12-2 Deicing System-Collection, Storage and Disposal Detailed Plan and Section.

12.2 DESCRIPTION OF DEICING SYSTEM

The deicing system consists of deicing equipment, deicing pad, manholes, sump, pumps, piping and valves.

Table 12-1. Deicing System Collection, Storage and Handling

Parameter	**Value**
Deicing Pad	
Dimensions:	150 ft x 200 ft
Catch Basin Piping:	12-inch DIP outflow pipe
Storm Sewer Junction Manhole	
Type:	ADOT Division of Highway Standards Drawing C-18.10 Manhole No. 3 Eccentric Configuration
Piping:	12-inch DIP inflow 4-inch PVC to Storage Sump 12-inch PVC to Storm Drain
Diameter(ft):	4
Invert Elevation (ft):	6585.8
Deicing System Motorized Valve Manhole	
Type:	ADOT Division of Highway Standards Drawing C-18.10 Manhole No. 3 Eccentric Configuration
Piping:	4-inch Sch. 80 PVC inflow 4-inch Sch. 80 PVC outflow
Motorized Butterfly Valve Size:	4-inch
Invert Elevation (ft):	6585.00

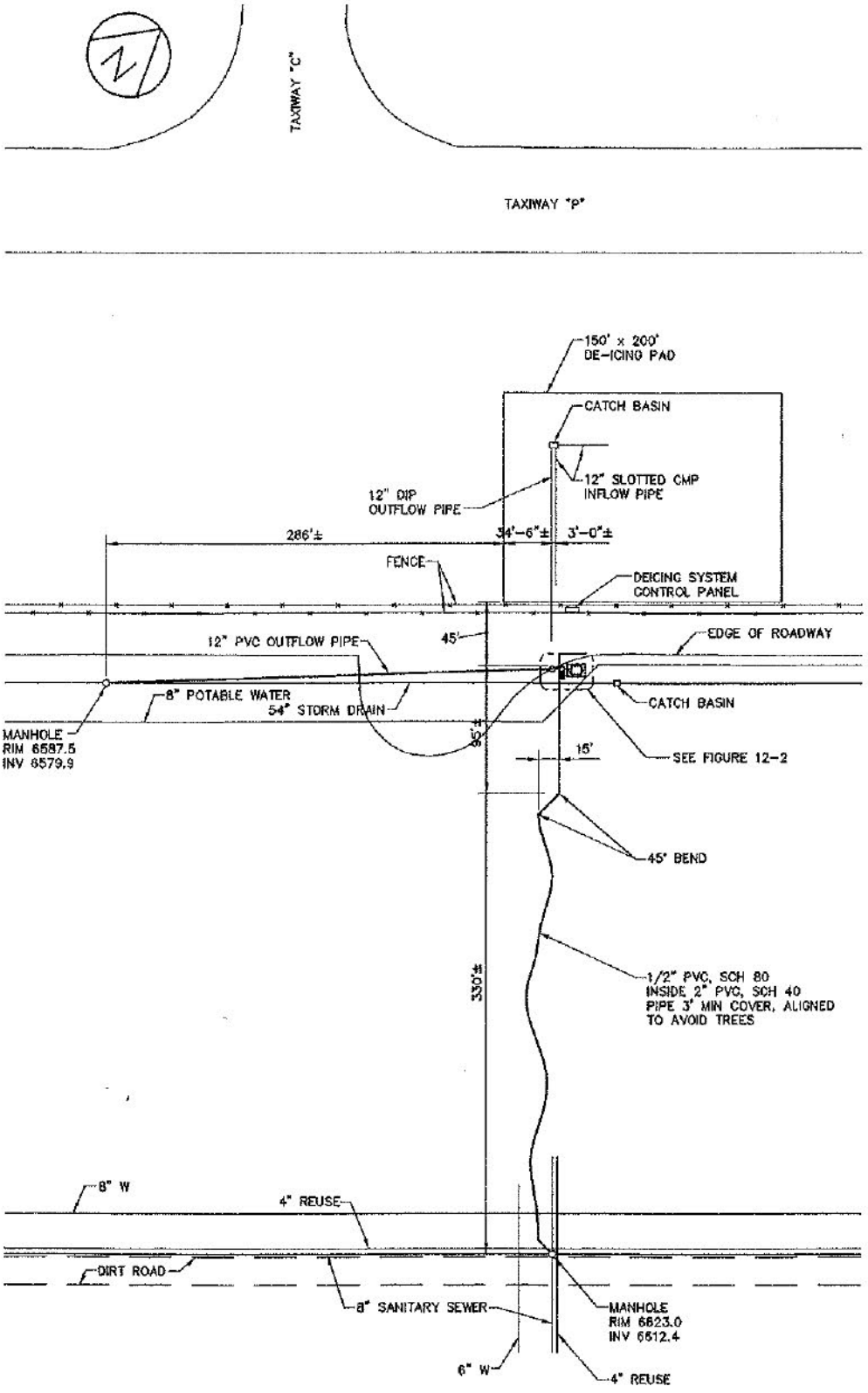

SITE PLAN

0 30 60 120

SCALE IN FEET

Grand Canyon National Park Airport
Water Supply, Treatment Facility and Deicing System
Operations and Maintenance Manual

DEICING SYSTEM
PLAN

Figure No. 12-1

U:\CADD\9706\OandM\9706OM22.dwg 03/08/99 1:37 pm

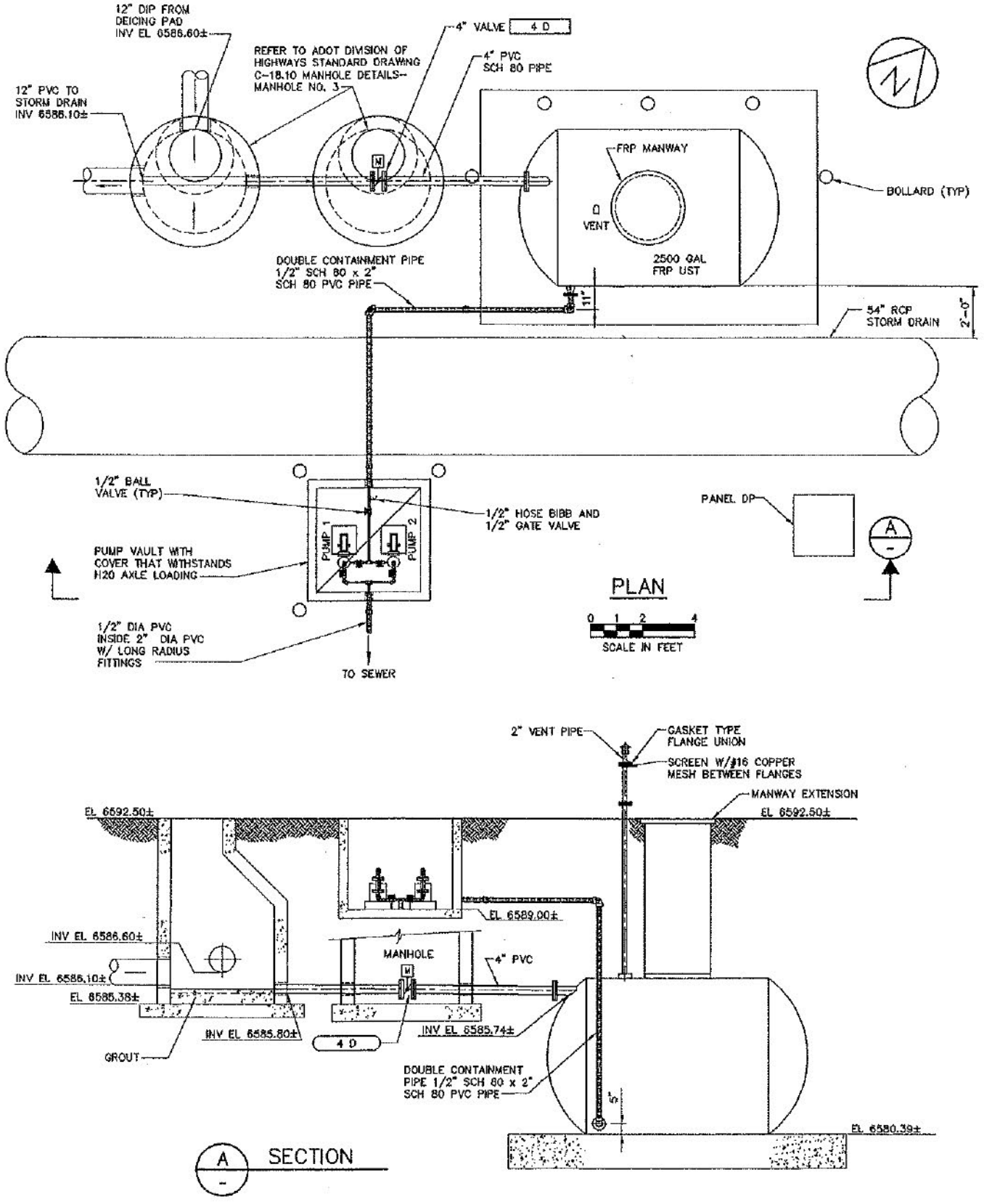

Grand Canyon National Park Airport
Water Supply, Treatment Facility and Deicing System
Operations and Maintenance Manual

DEICING SYSTEM–COLLECTION, STORAGE AND DISPOSAL DETAILS

Figure No. 12–2

U:\CADD\9706\OandM\9706OM23.dwg 03/08/99 1:37 pm

Table 12-1. Deicing System Collection, Storage and Handling (Cont'd)

Parameter	Value
Underground Storage Sump	
Material of Construction:	FRP
Capacity:	2,500 gallon
Manway:	30-inch located at grade level
Level Sensors, Type:	probe
Deicing Solution Pump Vault	
Deicing Pump	
Pump Type:	Metering, Solenoid Driven
Manufacturer:	Prominent
Pump Model:	Gamma G/5b
Liquid End Type:	0417-1 PP1
Number:	2
Capacity(gph):	0.04 - 4.7

12.2.1 Deicing Pad

All aircraft deicing takes place on the deicing pad. Deicing pad is a 150 ft x 200 ft slab located south of the airport and east of taxiway "P". The deicing pad is sloped to drain into the catch basin. The catch basin is a wet well with a 12-inch DIP outflow pipe. The water collected in the catch basin flows through the 12-inch pipe into the manholes. The deicing pad has a local control panel as indicated in Section 5. Activating the deicing system at the local panel opens the motorized butterfly valve allowing the deicing fluid to drain into the storage sump.

12.2.2 Manholes

The deicing system consists of two manholes. The 12-inch pipe from the catch basin flows into the storm drain junction manhole. The first manhole has two outlets, a 4-inch PVC pipe outlet to the second manhole into underground sump and a 12-inch PVC pipe outlet to the storm drain. The invert of 4-inch PVC outlet to the sump is approximately 0.3 ft below that of 12-inch PVC pipe storm drain outlet to allow deicing fluid to drain only to the storage sump.

The second manhole is located between the first manhole and the sump. The second manhole contains a 4-inch motorized butterfly valve mounted on the 4-inch PVC pipe running from the first manhole to the sump.

12.2.3 Deicing Sump

The deicing sump is a 2500 gallon FRP underground storage tank with the bottom of tank 12 feet below grade. Liquid in the first manhole flows into the deicing solution storage sump when the

motorized butterfly valve is open. When not deicing, the valve is kept normally closed so that storm water does not enter into the sump. The sump is also equipped with a 2-inch vent pipe at the top and ½ -inch double contained schedule 80 PVC pipe which is connected the deicing system metering pumps.

12.2.4 Pumps

The deicing system consists of two dry-pit pumps located in a vault south of the underground storage sump. The two pumps are piped to provide redundancy. One pump is operational at any given time while the second pump serves as a stand-by unit. The liquid collected in the sump is pumped through a ½-inch PVC pipe to the wastewater collection system for treatment. The pumps are metered to send a low, controlled flow of deicing solution to wastewater collection system to avoid organic loading upsets at the wastewater treatment facility.

12.3 DETAILED OPERATION AND CONTROLS

12.3.1 Normal Operation - No Deicing

During normal operation, the motorized valve is closed. Storm runoff collected in the catch basin flows into the first manhole. Since the valve is closed, the runoff flows into the storm drain.

12.3.2 Normal Deicing Operation

When the deicing equipment is operational, the motorized valve in the deicing sump is automatically opened. The liquid collected in the catch basin flows by gravity into the underground storage sump. After the liquid level rises to a preset level, the deicing pumps are switched ON automatically so that deicing liquid in the sump is pumped to the wastewater collection system.

12.3.3 Maintenance and Repair of Deicing Pumps

The deicing system has two pumps to empty the sump. Due to available redundancy, either of the pumps can be shut down and isolated for maintenance and repair while the other pump is operational.

1. Turn the local pump control switch OFF (i.e select the other pump for operation).
2. DISCONNECT the power supply to the pump at the MCC. Lock and Tag.
3. Isolate the pump by closing the suction and discharge valves to the pump.
4. Perform maintenance and repair per manufacturers instructions.
5. Open the suction and discharge valves.

6. Unlock and remove tag at the MCC. CONNECT the power supply.

7. Turn the local pump control switch ON.

12.3.4 Maintenance and Repair of Motorized Butterfly Valve

No deicing operation should be performed when maintenance and repair is carried on the motorized butterfly valve. Follow the steps below prior to conducting maintenance and repair on the motorized valve.

1. Turn OFF the motorized valve switch on the local panel. Lock and tag.

2. DISCONNECT the power supply to the motorized valve at the MCC. Lock and tag.

3. Perform maintenance and repair per manufacturers instructions.

4. Unlock and remove tag at the MCC. CONNECT the power supply at the MCC.

5. Unlock and remove tag at the local panel.

12.3.5 Emergency Fuel Spill

In the event of a deicing pad fuel spill, the deicing system will be shut down. The system shall be powered down from the circuit breaker panel OP. Do not allow personnel into the deicing pad area for clean-up operations until the system is powered down. Collect and dispose of spilled fuel as directed by airport procedures.

Appendix

Chemical Feed Pump Dose Curves

PUMP CAPACITY, 60 GPD

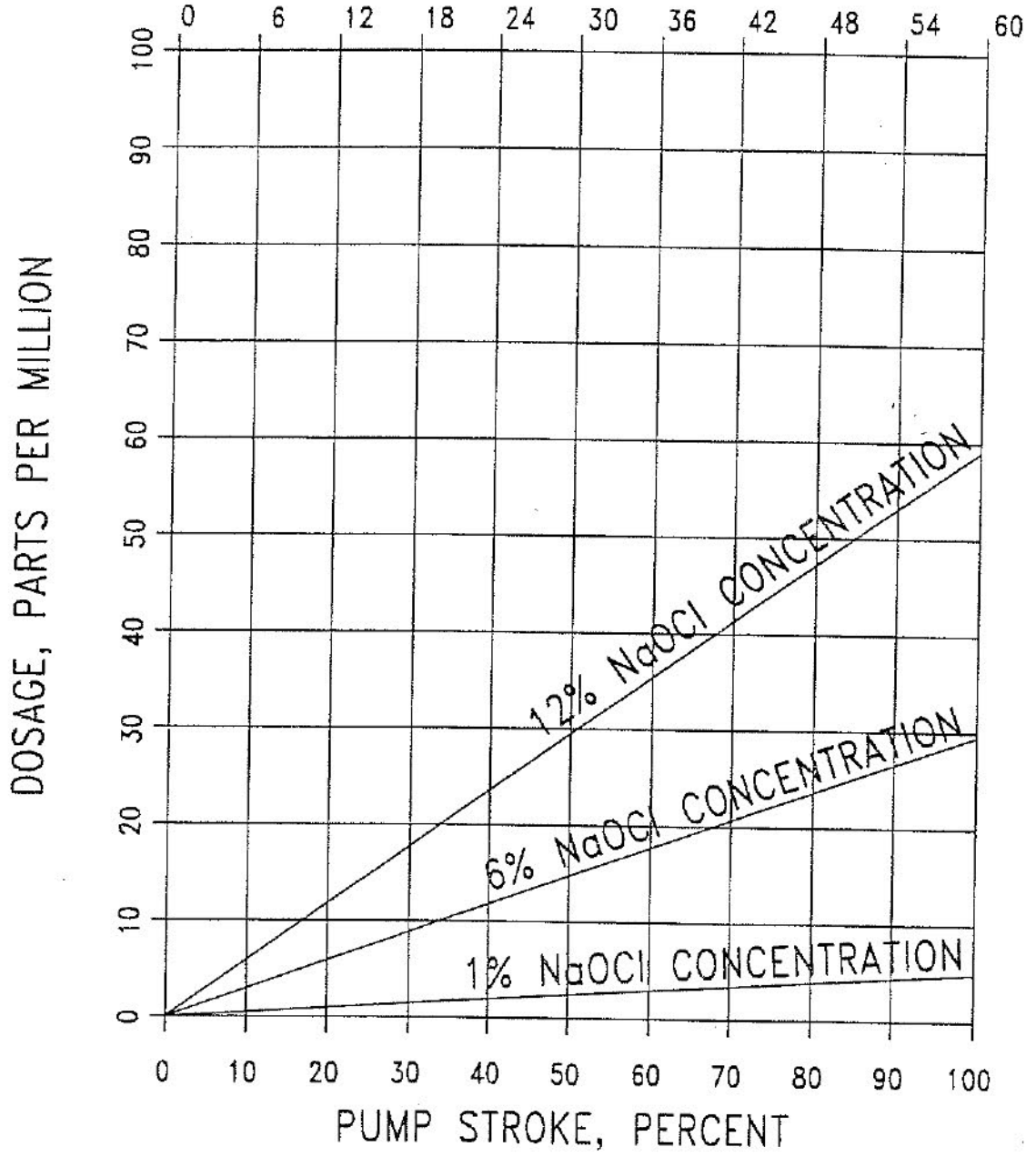

TO FIND PUMP STROKE SETTING FOR A GIVEN P.P.M. DOSAGE, FOLLOW DOSAGE ACROSS TO INTERSECTION WITH SOLUTION STRENGTH IN USE, THEN DOWN TO FIND PUMP STROKE.

PLANT FLOW RATE: 85 GPM
CHEM. PUMP CAPACITY: 60 GPD

REV. NO.	REVISION	DATE	BY	APPR.

DO NOT SCALE DRAWING OR CALCULATE DIMENSIONS. REFER TO U.S.FILTER/CPC FOR ALL DIMENSIONS

THIS DOCUMENT AND ALL INFORMATION CONTAINED HEREIN ARE THE PROPERTY OF THE UNITED STATES FILTER CORPORATION AND/OR ITS AFFILIATES ("USF"). THE DESIGN CONCEPTS AND INFORMATION CONTAINED HEREIN ARE PROPRIETARY TO USF AND ARE SUBMITTED IN CONFIDENCE. THEY ARE NOT TRANSFERRABLE AND MUST BE USED ONLY FOR THE PURPOSE FOR WHICH THE DOCUMENT IS EXPRESSLY LOANED. THEY MUST NOT BE DISCLOSED, REPRODUCED, LOANED OR USED IN ANY OTHER MANNER WITHOUT THE EXPRESS WRITTEN CONSENT OF USF. IN NO EVENT SHALL THEY BE USED IN ANY MANNER DETRIMENTAL TO THE INTEREST OF USF. ALL PATENT RIGHTS ARE RESERVED. UPON DEMAND OF USF, THIS DOCUMENT, ALONG WITH ALL COPIES AND DUPLICATES, AND ALL RELATED NOTES AND ANALYSES, MUST BE RETURNED TO USF OR DESTROYED, AS INSTRUCTED BY USF. ACCEPTANCE OF THE DELIVERY OF THIS DOCUMENT CONSTITUTES AGREEMENT TO THESE TERMS AND CONDITIONS.

UNLESS OTHERWISE SPECIFIED DIMENSIONS ARE IN INCHES
TOLERANCES ON:
2-PLACE DECIMALS +/- .01
3-PLACE DECIMALS +/- .005
ANGLES +/- 1°
FRACTIONS +/- 1/64
BREAK ALL SHARP EDGES

U.S. FILTER / CPC

U.S.FILTER / CPC
441 Main St., P.O.Box 36, Sturbridge, MA 01566

TITLE: HYPOCHLORITE DOSAGE CURVE

APPR. BY	DRAWN BY	SCALE	DATE	SHEET NUMBER	DRAWING NUMBER	REV.
	DRG		5/13/98		52001059-81	

DEICING SOLUTION PUMPS

11.5.8 Nomograph 0417

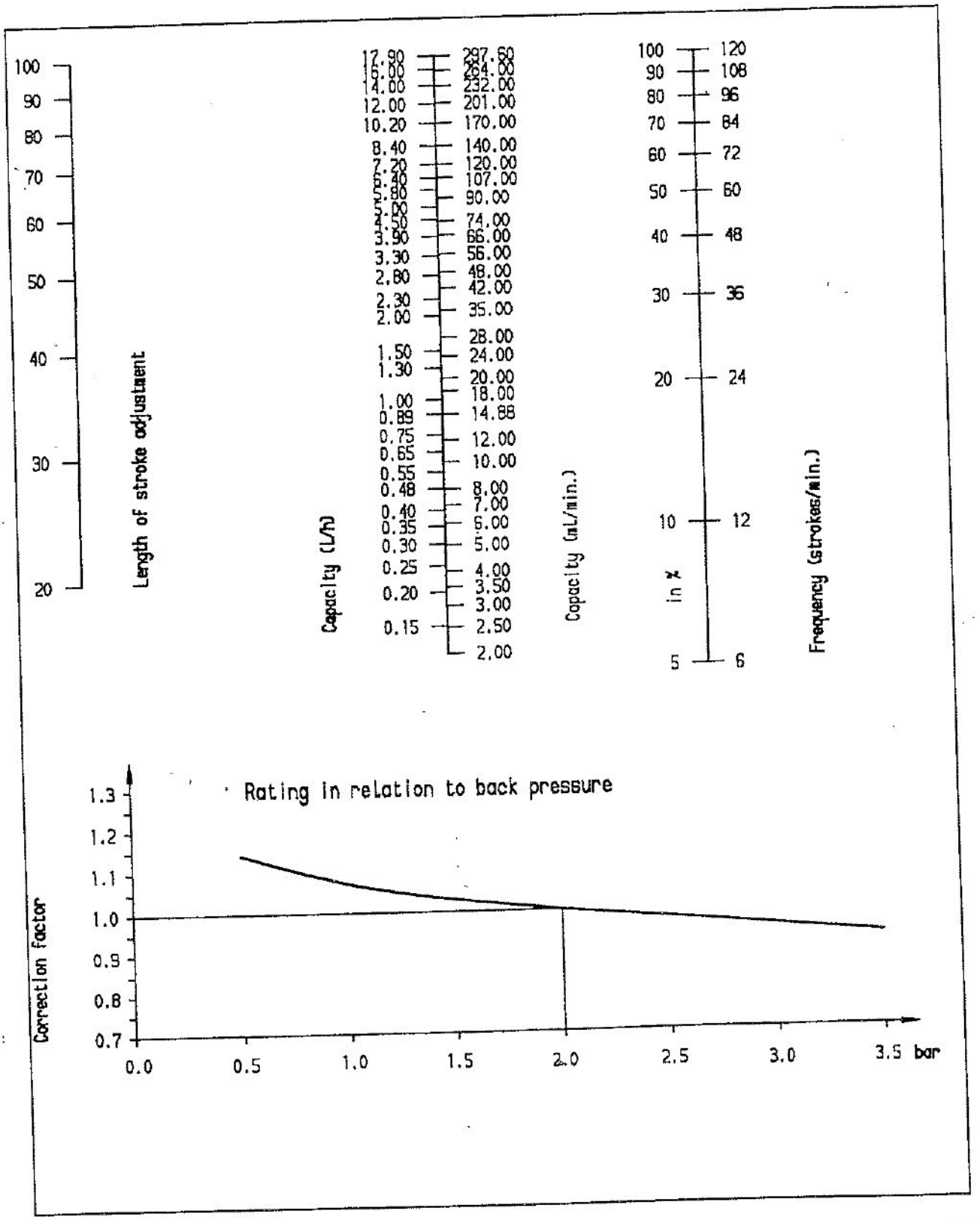

Appendix

Equipment Cut Sheets

Burke Environmental Products
a division of Burke Industries
2250 South Tenth Street, San Jose, CA 95112
(408) 297-3500 or (800) 669-7010 FAX: (408) 280-0699

M-284 Black, Potable Grade
~~M-308 Black, Industrial Grade~~
45 Mil, 10x10-1000d Scrim
Hypalon® Flexible Membrane

45 MIL REINFORCED HYPALON (CSPER) MEMBRANE SPECIFICATION GUIDE

The following is a specification for Burke's flexible membrane pond lining material, and is recommended for use in specifying lining materials.

PHYSICAL PROPERTIES: (These are interim values and subject to change).

Property	Test Method	Minimum Specification*	Typical Avg. Values
Thickness			
1. Total, overall (mils)	ASTM D751	41	45 nominal
2. Min. over scrim (mils)	Optical Method	11	pass
Tensile Properties (each direction)	ASTM D751 Grab Method		
1. Breaking Strength (pounds) Fabric		200	280
Membrane Rupture		150	230
2. Elongation at Break Fabric		15%	21%
Membrane Rupture		30%	115%
Tear Propagation (pounds)	ASTM D751, Tongue Tear (8"x8" sample)	80	105
Hydrostatic Resistance (psi)	ASTM D751, Method A Procedure 1	250	415
Puncture Resistance (pounds)	FTMS 101B Method 2031	—	250
Bonded Seam Strength (pounds)	ASTM D751, Modified (12 in./min.)	160	175
Ply Adhesion (lbs./in. width)	ASTM D413 Machine Method, Type A (12 in./min.)	7 (or film tearing bond)	10
Ozone Resistance	ASTM D1149, 1/8" bent loop, 100 pphm, 104°F, 7 days	No cracks at 7x magnification	pass
Low Temperature (refer to para. following)	ASTM D2136, 1/8" mandrel, 4 hrs. @ −40°F	pass	pass at −45°F

These specification tables represent current opinion of the data points to characterize the membrane product as produced and are not necessarily appropriate for product performance or installation or engineer- design criteria 'per se'. (For example, the low temperature resistance nbers represent qualities for a few minutes at a given temperature d must not be interpreted or extrapolated into installation temper- ature qualities or comparisons").

**Minimum specification limits are currently proposed industry standards for this type of flexible membrane product. Burke Quality Control monitoring limits for this specification are based on a minimum 97.7% one-sided confidence level.*

OTHER MATERIAL SPECIFICATIONS AND CHARACTERISTICS:

A. The thermoplastic elastomer lining material shall be manufactured from a synthetic rubber compound designed to contain Hypalon Type 45 synthetic rubber as the principal elastomer. The compound used in manufacture of the laminate shall conform to the specification of Burke 30 Mil Unsupported Hypalon® M-148 Potable Grade or M-321 Industrial Grade material. (Specification Sheet BR00208).

B. The thermoplastic elastomer lining shall be manufactured totally by calendering, with each ply of rubber laminated to the next ply through the openings in the scrim weave to produce a pinhole-free construction. The high-strength reinforcing fabric (scrim) shall have a 10 x 10 plain weave 1000 warp/1000 fill denier construction. The single ply of reinforcing fabric shall be totally encapsulated within two plies of rubber, giving a 3 ply construction of nominal 45 mil thickness. Exposed fabric or indication of delamination will not be permitted.

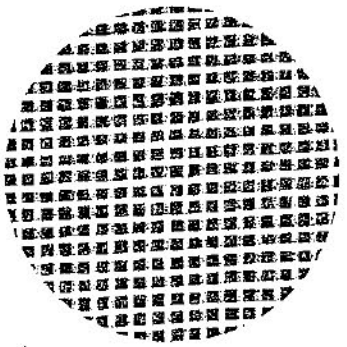

10 x 10 plain weave
1000 warp/1000 fill denier

C. "Potable Grade" Hypalon is suitable for the storage of ~~potable water~~. A colored top ply in white, blue, tan or green is available at additional cost. Operational service temperature should not exceed 120°F maximum. "Industrial Grade" Hypalon for non-potable use is available only in black. Operational service temperature should not exceed 160°F maximum. Brief or intermittent exposure to higher temperatures may occasionally be tolerated, but may reduce the effective service life of the liner. The required grade must be specified, and the liner manufacturer shall certify compliance.

D. All membrane lining materials transmit water vapor at a very low rate, which is related to the temperature and relative humidity. The permeability of Burke Hypalon, as expressed in Metric Perm-Centimeters is less than 3×10^{-3} for a 30 mil thickness. (This translates to approximately one gallon per acre per year @ 72°F and 50% R.H.). Permeability can also be expressed as a "K" factor in centimeters/second, a test generally used for more porous materials. Burke Hypalon has a "K" factor in the range of 10^{-12}.

® Hypalon is a registered trademark of DuPont for chlorosulfonated polyethylene

BR00215 6/84 gp

If so...

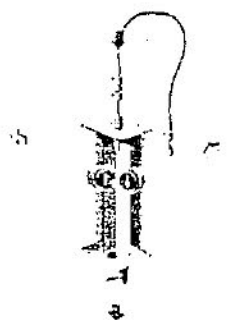

All TD-4100 on-line monitors are equipped with a proprietary non-fouling, non-contact flow cell.

The TD-4100 on-line monitor reliably detects BTEX, gasoline, diesel, jet fuel, fuel oil, and lubricating oil in water. Recognized worldwide for its non-fouling, low maintenance operation, the TD-4100 continuously monitors aromatic hydrocarbons in water from ppm to low ppb. Featuring hassle-free operation, the TD-4100 supports potable and industrial wastewater intake, treatment, and discharge applications for hydrocarbon monitoring in water. Continuous monitoring saves time, money, grab sampling, and helps prevent pollution. The performance of each monitor is guaranteed. Nearly 25 years of experience is built into every TD-4100.

For more information, fill out the reply card below and FAX this page to 408/749-0998 or detach the card and drop it in the mail. For immediate information, call us at 408/749-0994.

World's largest manufacturer of field and process fluorometers.

TURNER DESIGNS
345 W. Middlefield Avenue • Sunnyvale, California
(408) 749-0994 • FAX (408) 749-0998

Internet: http://www.turnerdesigns.com

NON-CONTACT, NON-FOULING FLOW CELL ● ● HIGH SENSITIVITY AND SELECTIVITY

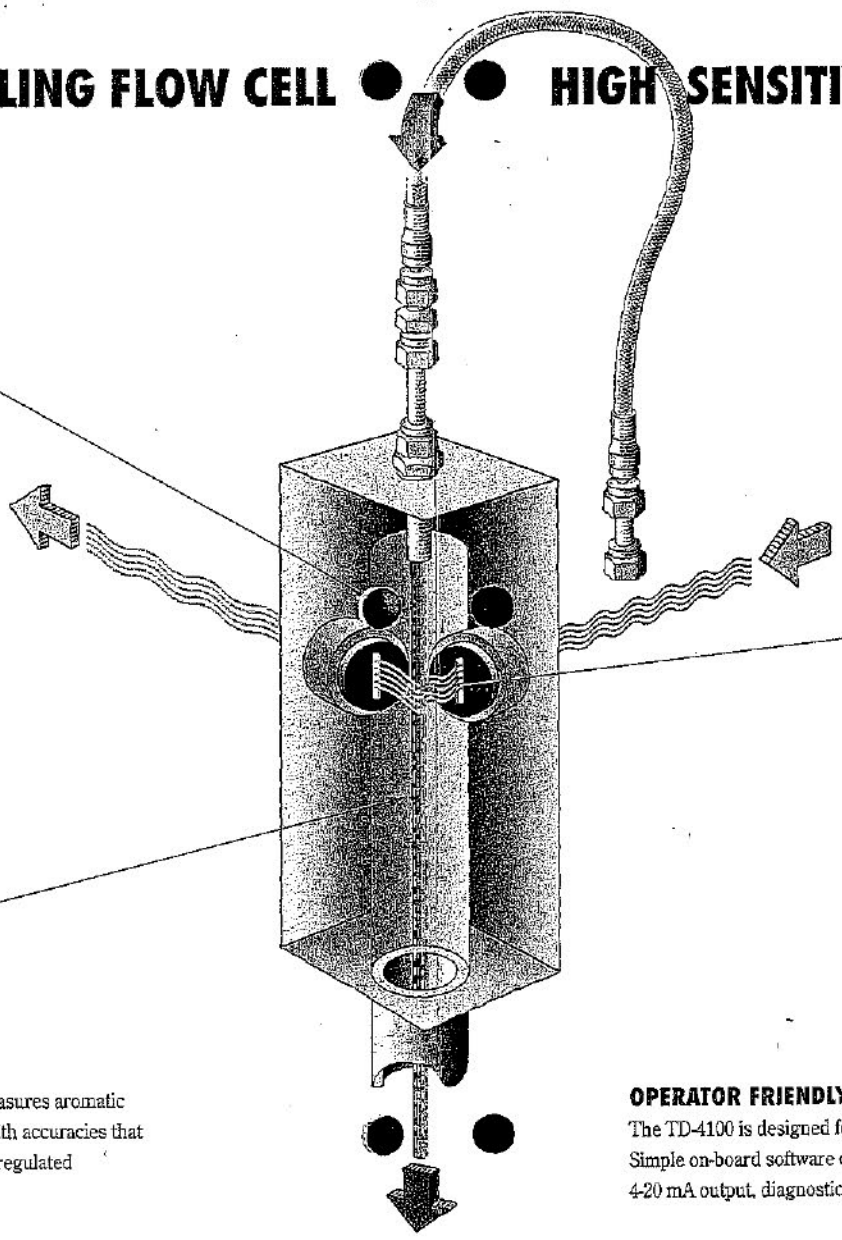

NON-CONTACT, NON-FOULING FLOW CELL

The TD-4100 does not have a glass flow cell. Aromatic hydrocarbons are detected in a stream of water which falls through an open chamber; the stream does not contact, dirty or foul the optical windows used for monitoring aromatic hydrocarbons. A proprietary *Air Curtain* system keeps optical windows fog-free in humid environments or hot water applications.

LOW MAINTENANCE

There are no tubes, pumps or valves to replace. The system's one moving part has a life expectancy of greater than 5 years. Routine maintenance involves changing a lamp twice a year and an air filter periodically.

DIRECT, CONTINUOUS MONITORING

The TD-4100 monitors a flowing water stream continuously. No chemicals, no pre-treatment and no manual manipulation of the sample are required to monitor aromatic hydrocarbons.

ACCURATE

The TD-4100 directly measures aromatic hydrocarbons in water with accuracies that consistently correlate to regulated laboratory methods.

SENSITIVE

BTEX, gasoline, diesel, jet fuel, crude oil, aromatic solvents and refined petroleum products containing aromatics are detected by the TD-4100 from low ppb (µg/L) to high ppm (mg/L). For example, the TD-4100 can detect 1 ppb of gasoline or diesel fuel in water free of interfering compounds.

SELECTIVE

The TD-4100 continuously measures the fluorescence of aromatic hydrocarbon compounds in water. Fluorescence occurs when a molecule absorbs light energy of one specific wavelength and emits light energy of a longer wavelength. Fluorescent compounds each have a unique signature, and these compounds can be displayed as an actual concentration.

EFFECTIVE MONITORING IN DIRTY WATER

Fluorescence technology makes the TD-4100 resistant to interferences by turbid or dirty water which impact on-line UV or IR absorption instruments. Most substances absorb light, but very few fluoresce; if a substance *does not* fluoresce at the specific wavelengths for the monitored aromatic hydrocarbon, it will not interfere.

OPERATOR FRIENDLY

The TD-4100 is designed for easy operation. Simple on-board software controls alarms, 4-20 mA output, diagnostics and calibration.

TD-4100 SPECIFICATIONS

Dimensions:	44.0" x 43.1" x 10.8" (111.8 cm x 109.4 cm x 27.5 cm)
Weight:	64 lbs (29 kg)
Power Requirements:	110 - 240 VAC, 50/60 Hz, 2A. Contact Turner Designs for DC applications.
Plumbing Requirements:	Feed: 0.5 - 2 gpm (2 - 8 L/min), 2" (5.01 cm) unrestricted drain
Air Supply:	Dry Air: 10 - 100 psi (68.9 - 689 kPa), 15 SCFH (246 cm^3H)
Operating Temperature:	32 - 120° F (0 - 49° C). Contact Turner Designs for configurations in extreme environmental conditions.
Sample Temperature:	< 140° F (60° C) (standard); 190°F (88° C) (optional)
Operational Principle:	Fluorescence
Detection Range:	1 ppb - >1000 ppm*
Calibration Stability:	10% or better over 90 days
Response Time:	< 10 sec
Calibration:	Multi-point calibration
Alarms:	Three alarm trigger points (baseline, early warning, and high alarm): Critical components linked to alarms *Local Alarm:* Local beep tone; LCD alarm message *External Alarm/Device Control:* 2 user-settable, independently-fused, solid-state relays (standard AC relays or optional DC relays); relays configurable as Normally Open or Normally Closed; user-settable set point and delays
Outputs:	*Signal:* 4 - 20 mA, isolated
Diagnostics:	Self diagnostics: Internal failure mode linked to relays and LCD display
Security:	Password protected for Master and User ID; padlockable cabinet
Electronics Cabinet:	Fiberglass reinforced polyester designed for highly corrosive environments
Maintenance:	Lamp (twice yearly); routine cleaning of plumbing
Air Purge (optional):	Class I Division I; Class I Division II (explosion-proofing)
Data Logger (optional):	Contact Turner Designs for detailed specifications.

* Limits of detection are dependent on target analyte and matrix

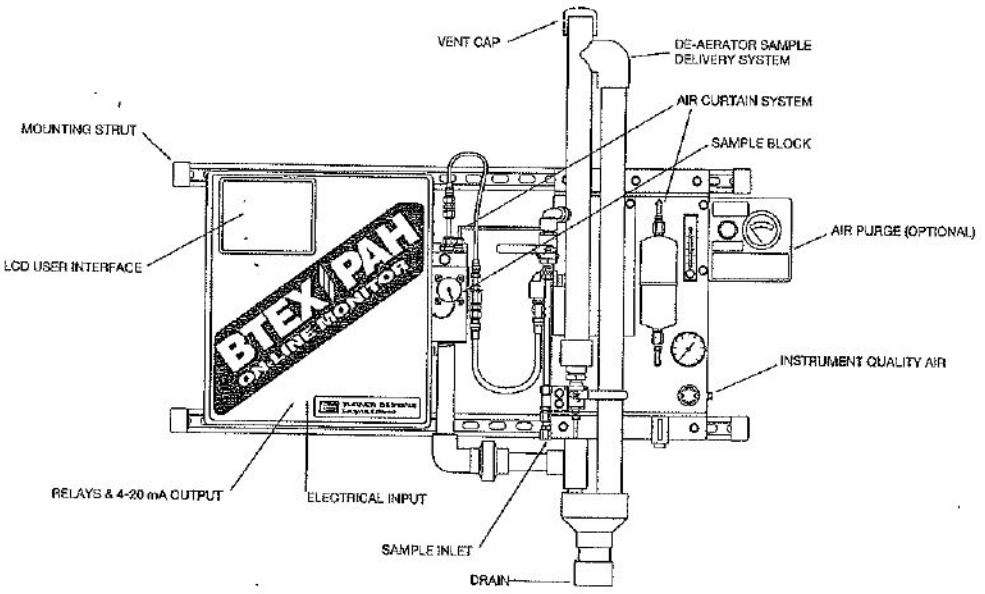

TURNER DESIGNS
845 W. Maude Avenue • Sunnyvale, CA 94086
(408) 749-0994 • FAX (408) 749-0998

Ellis Corporation
Water Pollution Control Equipment
1400 West Bryn Mawr Ave., Itasca, IL 60143
(630) 250-9222, FAX (630) 250-9241

OIL/WATER SEPARATOR SPECIFICATIONS

A Corrugated Plate Oil Water Separator, Ellis Corporation Model OWS designed to treat 100 GPM flow of wastewater, containing oil of approximate specific gravity of .90 or less shall be provided and installed as shown on the drawings. The separator will produce an effluent containing less than 15 mg/L of oil droplets larger than 20 microns.

EQUIPMENT DESCRIPTION

The influent shall enter the inlet chamber through an inlet baffle which disperses the flow evenly across the depth and width of the coalescing pack. A sludge chamber shall be provided for the collection of heavy solids. The plates of the separation chamber shall be placed at a maximum of 1/4" apart and are contained in a stainless steel frame that is equipped with lifting lugs for easy removal. The sludge chamber shall be located directly beneath the coalescing media and shall provide adequate volume for settled sludge. The chamber shall be equipped with ball valves, pitched sides and two (2) outlet ports.

An oil storage reservoir with a skimming weir shall be provided at the end of the separation chamber. The recovered oil shall flow from the oil reservoir by gravity or, as an option, may be pumped to a storage tank. The clean water leaving the pack shall pass under an oil retention baffle and into the effluent chamber were it passes over an adjustable weir, which maintains the liquid level in the separator. The clean water shall flow by gravity through a flanged pipe outlet from the separator

The tank shell and baffles shall be constructed of type 304 stainless steel. The media plates are constructed of oleophilic plastic and housed in a 304 stainless steel frame. Lifting lugs are provided at balance points.

The exterior non-wetted support structure surfaces are constructed of type 304 stainless steel.

Ellis Corporation
Water Pollution Control Equipment
1400 West Bryn Mawr Ave., Itasca, IL 60143
(630) 250-9222, FAX (630) 250-9241

OIL/WATER SEPARATOR PERFORMANCE & THEORY OF OPERATION

A Corrugated Plate Oil Water Separator, Ellis Corporation Model OWS designed to treat 100 GPM flow of wastewater, containing oil of approximate specific gravity of .90 or less shall be provided and installed as shown on the drawings. The separator will produce an effluent containing less than 15 mg/L of oil droplets larger than 20 microns.

The Ellis oil/water separator consists of inclined packs of corrugated plates mounted parallel to each other. As wastewater flows between the plates the lighter oil droplets float up the incline onto the concave upper corrugations where they coalesce into larger drops that move along the plates until they finally float to the surface. After the floating oil layer achieves sufficient thickness it overflows into the oil storage reservoir.

ELLIS CORPORATION

LIST OF INSTALLED OIL/WATER SEPARAYORS

Clean Rentals, Inc.	New Bedford, MA
Odis Asversa	Mexico City, Mexico
Teledyne Ryan Aeronautical	Toledo, OH
National Dust Control	Columbus, IN
Western Tube & Conduit	Long Beach, CA

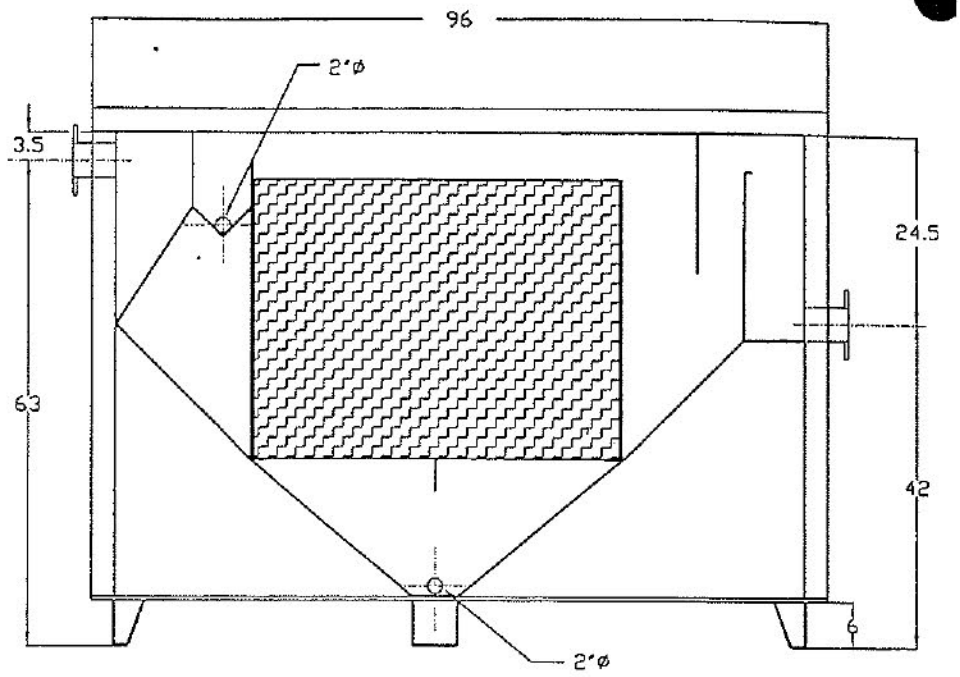
96
2"ø
3.5
24.5
63
42
6
2"ø

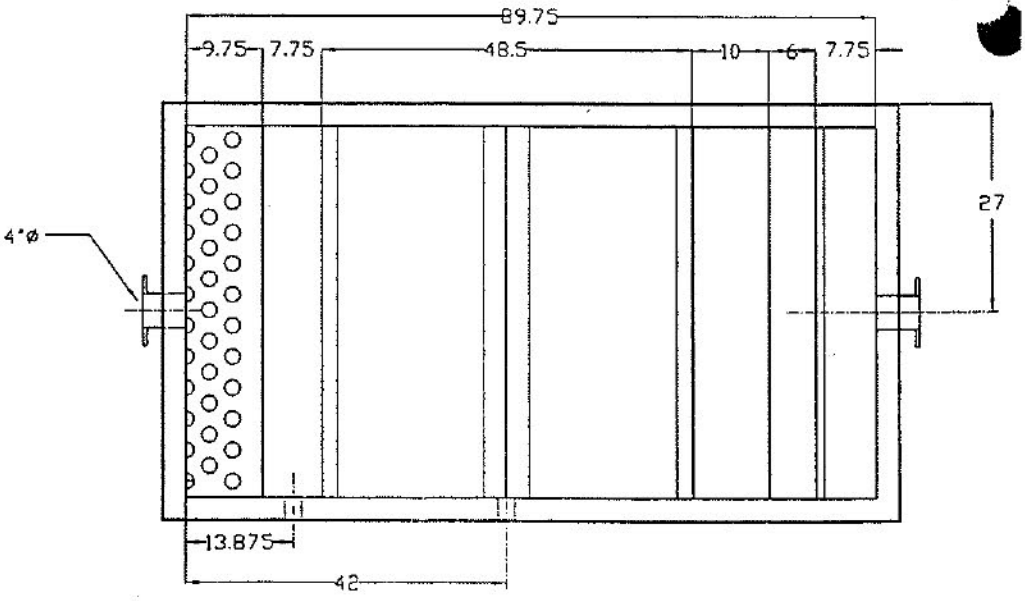
89.75
9.75
7.75
48.5
10
6
7.75
27
4"ø
13.875
42

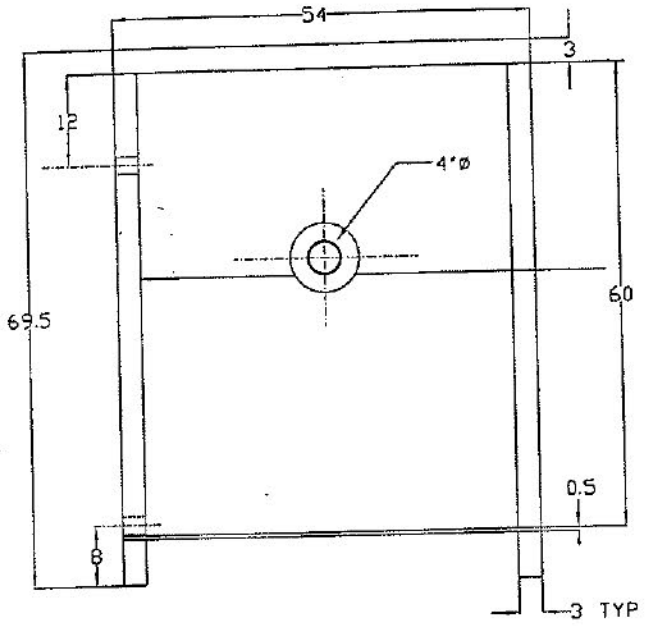

MATERIAL & EQUIPMENT

1. WETTED METAL PARTS ARE TYPE 304 STAINLESS STEEL
2. COALESCING MEDIA IS PVC

ELLIS CORPORATION
ENGINEERS AND MANUFACTURERS

MODEL OWS-048 OIL/WATER SEPARATOR
GENERAL ASSEMBLY

CAD FILE: 32-1023

MATERIAL	REV. LEVEL	A				
	ECO No.					
	DATE REV	1/13/97				

DRAWN BY: DEA DATE: 11/15/96	CHECKED BY: DATE:	APPROVED BY: DATE:	MFG. ENG: DATE:

UNLESS OTHERWISE NOTED
TOLERANCE ON TWO DECIMAL PLACES ±0.030
TOLERANCE ON THREE DECIMAL PLACES ±0.015
SURFACE FINISH ON MACHINED FACES 125
INTERNAL CORNERS 0.030 RADIUS MAX
EXTERNAL CORNERS 0.030 x 45° CHAMFER
HOLES COUNTERSINK 0.030 x 45°

THIS DRAWING IS THE PROPERTY OF ELLIS CORP. IT IS LOANED UPON THE EXPRESS CONDITION THAT IT SHALL NOT BE COPIED OR REPRODUCED IN ANY MANNER, THAT IT SHALL NOT BE SUBMITTED TO OTHERS FOR EXAMINATION WITHOUT THE CONSENT OF THIS COMPANY, THAT IT SHALL NOT BE USED IN ANY OTHER WAY DETRIMENTAL TO THE INTERESTS OF THIS COMPANY, AND THAT IT SHALL BE RETURNED UPON DEMAND

NEXT ASSEMBLY:

SCALE	DRAWING NUMBER		
	PROD. CLASS	SERIAL #	S
	32	1023	

SERVICE MANUAL

for model A1D CDQ³ SPA
for sales order AS4496697

MOYNO®
1000 Pumps

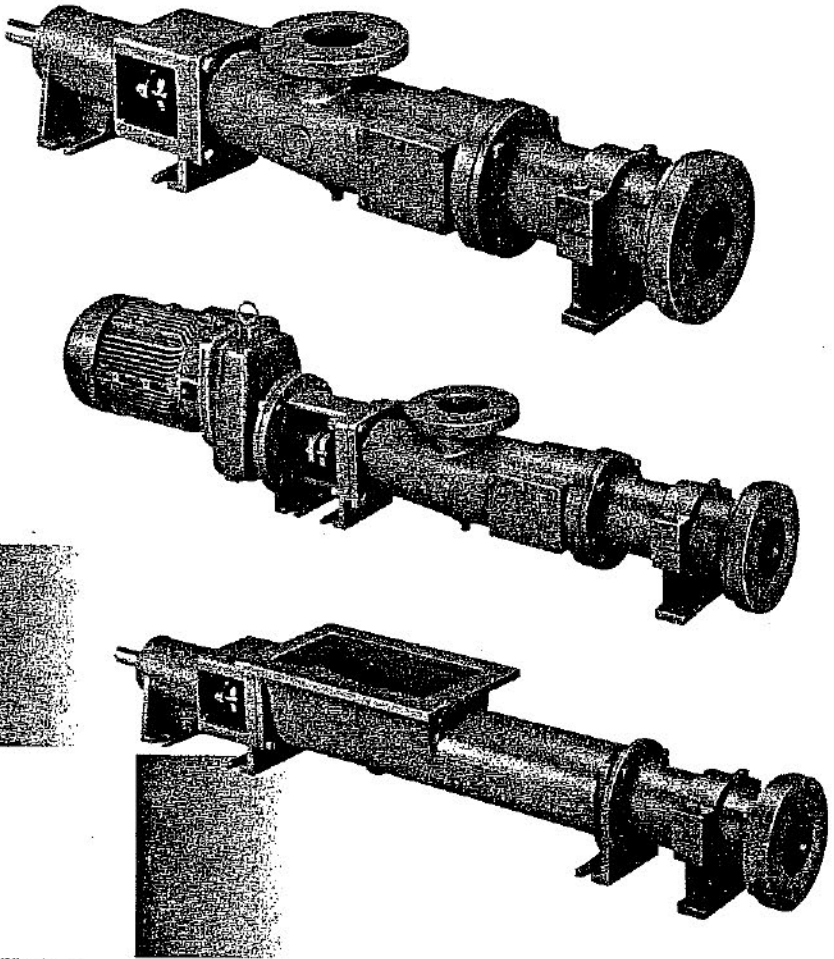

Moyno Industrial Products

A Unit of Robbins & Myers, Inc.

Wheelabrator Engineered Systems Inc.

microfloc®

Trimite™

Big Plant Performance in a Small Water System

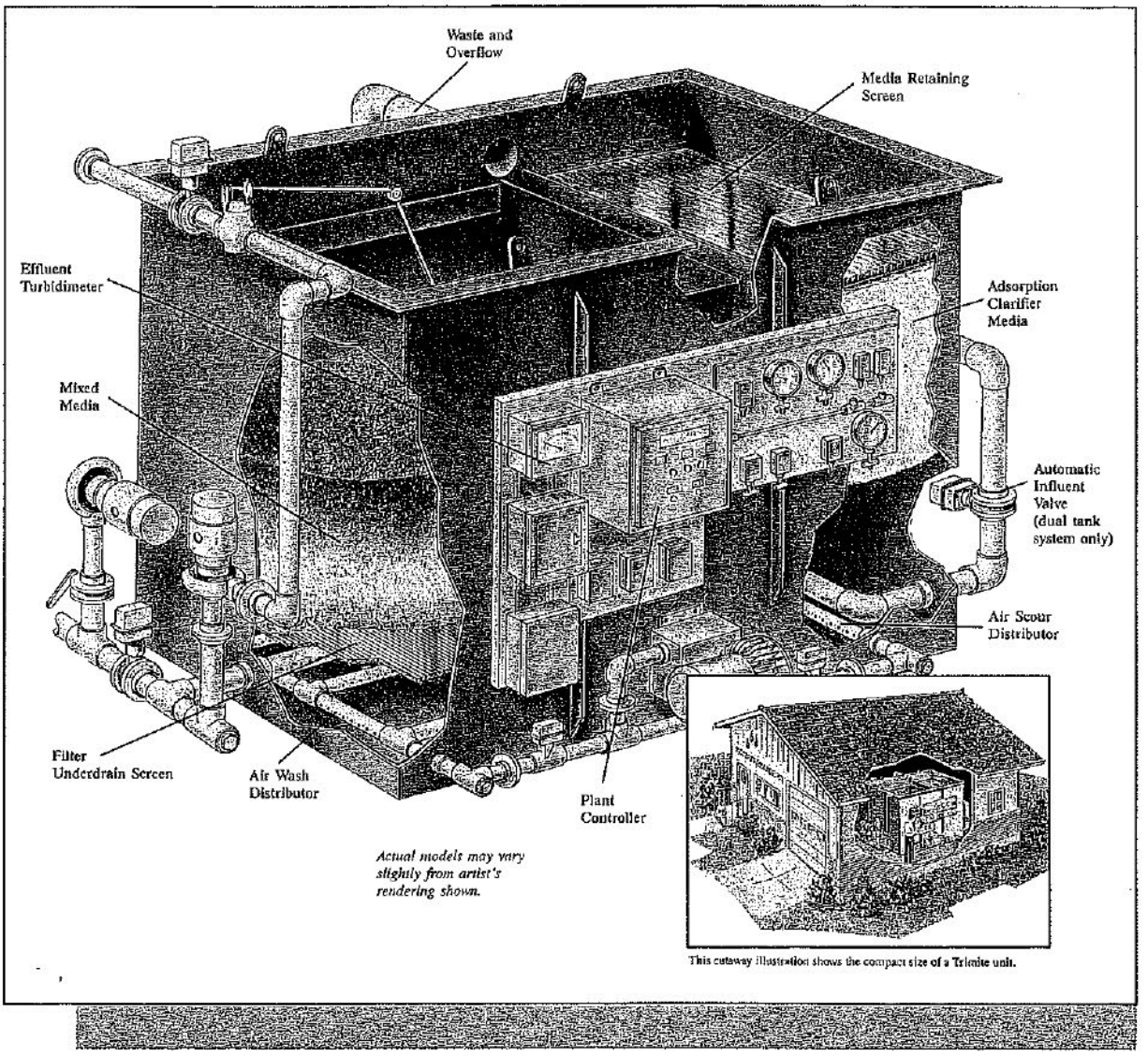

This cutaway illustration shows the compact size of a Trimite unit.

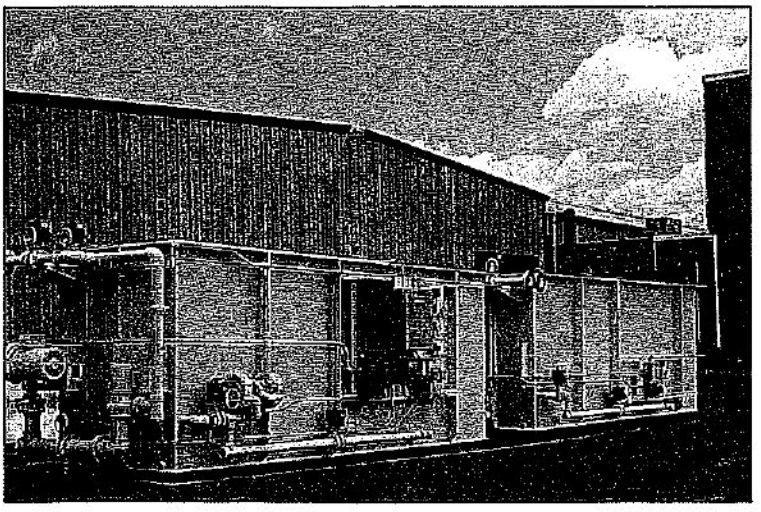

- ▲ Proven Trident Technology
- ▲ 50 - 700 GPM Systems
- ▲ Factory Assembled
- ▲ Minimal Space Requirements
- ▲ Superior Water Quality
- ▲ Simple Operation

How Trimite™ Works

After chemical dosing, raw water enters the plant and flows upward through the Adsorption Clarifier. This innovative solids separation device contains granular, buoyant media that trap and remove the coagulated particles. Contact flocculation and clarification occur as the coagulated particles move through the media and are adsorbed onto the surfaces of the media and previously trapped solids. The Adsorption Clarifier provides stable, high-rate pretreatment and sends well-conditioned water to the Mixed Media filter. At this stage, up to 95% of turbidity has already been removed.

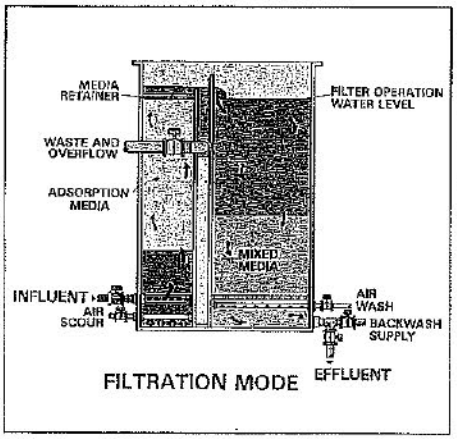

FILTRATION MODE

The Mixed media filter polishes the flow to create excellent finished water quality. The filter uses a careful combination of materials to produce a filter bed that hydraulically grades from coarse to fine in the direction of filter flow. This allows true depth filtration and increased solids storage at high filter rates designed to match the efficiency of the Adsorption Clarifier. The result is consistent, high-quality effluent.

In addition, the Tri-Mite water system uses a simplified, two-step cleaning process. The Adsorption Clarifier is cleaned by injecting diffused air into the bottom of the clarifier. The air reduces the adsorption media's buoyancy, causing immediate expansion and scouring. Raw water continues to enter the clarifier, and the accumulated solids are flushed to waste.

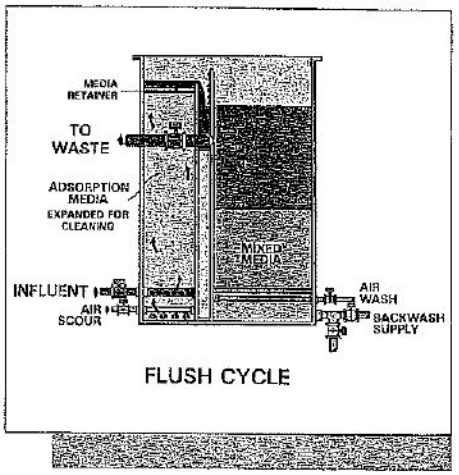

FLUSH CYCLE

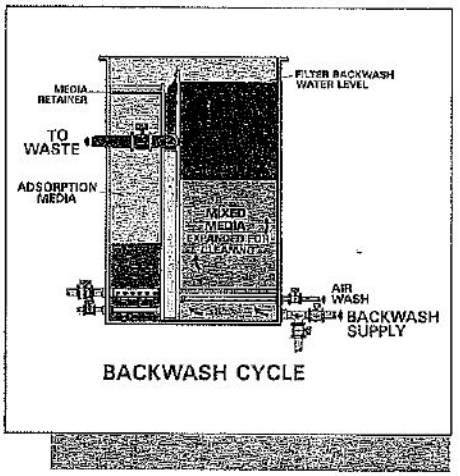

BACKWASH CYCLE

The Mixed Media filter is backwashed by reversing the flow. All Tri-Mite models feature a direct retention underdrain with air-enhanced backwash.

Model		Nominal Capacity
TM-50A	50gpm	(72,000 GPD)
TM-75A	75 gpm	(108,000 GPD)
TM-100A	100 gpm	(144,000 GPD)
TM-175A	175 gpm	(252,000 GPD)
TM-350A	350 gpm	(504,000 GPD)
(2) TM-350A	700 gpm	(1,008,000 GPD)

Note: Tri-Mite is designed for a one or two-unit configuration. The second unit of a two-unit system shares controls, backwash pump and air blower with the first unit.

Optional Equipment

- Filter-to-waste valve and controls for use after filter backwash.
- Influent static mixer where additional mixing is required.
- Additional chemical feed systems as required.
- Streaming current monitor coagulation control.

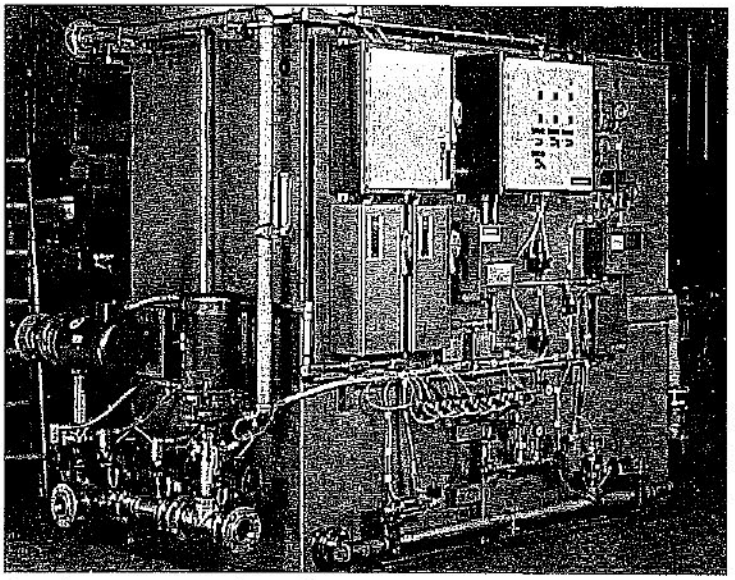
Stainless Trimite ready to ship.

MICRO -4132 9/93 PRINTED IN U.S.A.

For more information:

Wheelabrator Engineered Systems Inc.

441 Main Street
Box 36, Route 20
Sturbridge, MA 01566
508/347-7049

© 1993 A WHEELABRATOR TECHNOLOGIES COMPANY
RECYCLED PAPER, 10% POST CONSUMER WASTE

Wheelabrator Engineered Systems Inc.

microfloc® products

Tri-Mite™

Technical Data Sheet

PARAMETERS		UNITS	TM-50A	TM-75A	TM-100A	TM-175A	TM-350A
Influent Flow Rate		GPM (GPD)	50 (72,000)	75 (108,000)	100 (144,000)	175 (252,000)	350 (504,000)
Shipping Dimensions		Length (ft)	9'-4"	9'-3"	10'-11"	13'-5"	22'-6"
		Width (ft)	6'-10"	8'-2"	8'-0"	10'-4"	10'-10"
		Height (ft)	9'-0"	9'-1"	8'-11"	9'-4"	9'-4"
Tank Dimensions		Length (ft)	6'-7"	6'-4"	8'-5"	10'-6"	19'-2"
		Width (ft)	2'-8"	4'-1"	4'-1"	5'-11"	5'-11"
		Height (ft)	7'-6"	7'-6"	7'-6"	7'-6"	7'-6"
Weights		Shipping (lbs.)	6,000	9,000	12,000	21,000	42,000
		Operating (lbs.)	10,500	16,000	21,000	37,000	74,000
Base Pad Design		Pounds/ft^2	675	675	675	675	675
Backwash Holding Tank Volume		Gallons	2,600	3,900	5,200	9,100	18,200
Overhead Clearance		Minimum (ft)	2'-6"	2'-6"	2'-6"	2'-6"	2'-6"
Pipe Connections		Influent (in.)	2	2-1/2	3	4	6
		Effluent (in.)	2	2-1/2	3	4	6
		Backwash (in.)	3	4	4	6	8
		Waste/Overflow (in.)	4	6	6	8	10
Adsorption Clarifier™		Total Area (ft^2)	5.0	7.5	10.0	17.5	35.0
		Upflow Rate (gpm/ft^2)	10	10	10	10	10
Mixed Media Filter		Total Area (ft^2)	10.0	15.0	20.0	35.0	70.0
		Rate (gpm/ft^2)	5	5	5	5	5
		Backwash Rate (gpm/ft^2)	15	15	15	15	15
Total Volume per Wash Cycle *(Notes 1 & 2)*		Adsorption Clarifier (gal.)	400	600	800	1,400	2,800
		Mixed Media (gal.)	900	1,350	1,800	3,150	6,300
	Pumps	Effluent	50 gpm, 1 hp	75 gpm, 1-1/2 hp	100 gpm, 3 hp	175 gpm, 5 hp	350 gpm, 10 hp
		Backwash	180 gpm, 3 hp	270 gpm, 5 hp	360 gpm, 7-1/2 hp	525 gpm, 10 hp	1,000 gpm, 25 hp
	Blower	Horsepower	3	3	7.5	7.5	7.5
	Controls	Solid State	Automatic	Automatic	Automatic	Automatic	Automatic
Process Components	Chemical Feed	Coagulant System	50 gal. tank	100 gal. tank	100 gal. tank	200 gal. tank	400 gal. tank
			60 gpd pump	108 gpd pump	108 gpd pump	240 gpd pump	480 gpd pump
			1/4 hp mixer	1/4 hp mixer	1/4 hp mixer	1/4 hp mixer	1/3 hp mixer
		Polyelectrolyte System	50 gal. tank	50 gal. tank	50 gal. tank	100 gal. tank	200 gal. tank
			60 gpd pump	60 gpd pump	60 gpd pump	108 gpd pump	240 gpd pump
			1/4 hp mixer	1/4 hp mixer	1/4 hp mixer	1/4 hp mixer	1/4 hp mixer
		Other Chemical System	50 gal. tank	50 gal. tank	50 gal. tank	100 gal. tank	200 gal. tank
			38 gpd pump	38 gpd pump	38 gpd pump	108 gpd pump	240 gpd pump
			1/4 hp mixer	1/4 hp mixer	1/4 hp mixer	1/4 hp mixer	1/4 hp mixer
Electrical		Load Center	120/240V, 60 Hz, 1Ø, 3 wire, 50A	120/240V, 60 Hz, 1Ø, 3 wire, 70A	120/208V, 60 Hz, 3Ø, 4 wire, 70A	120/208V, 60 Hz, 3Ø, 4 wire, 100A	120/208V, 60 Hz, 3Ø, 4 wire, 150A

Notes:

1. Mixed Media backwash rate shown above is 15 gpm/ft^2 as required at 60°F. Required rate varies linearly with temperature from 10 gpm/ft^2 at 32°F to 18 gpm/ft^2 at 75°F. Wash volumes indicated above are based on a 6-minute backwash duration.
2. The Adsorption Clarifier™ is normally washed (using influent water) one or more times between Mixed Media backwashes, as well as in sequence with a Mixed Media backwash. The waste holding system should be sized to handle a total of two complete wash volumes from each compartment. The Adsorption Clarifier wash volume indicated above is based on an 8-minute total wash flush.
3. The influent pumping system should provide a range of 25-35 ft. at the plant inlet.
4. Available materials of tank construction include painted carbon steel, aluminum or 304SS. Process piping is PVC.
5. The second unit in a two-tank configuration shares the controls, effluent turbidimeter, backwash pump, air blower and chemical feed systems from the first unit.
6. Standard start-up and operator training requirements are 3 days in one trip to the jobsite for the TM-50A, TM-75A and TM-100A models. TM-175A and TM-350A standard start-up and operator training requirements are 4 days in one trip to the jobsite. Add one additional day for two-unit configurations.

Tri-Mite™ Specifications

General

Under this section of the specifications, the contractor shall furnish and install a completely integrated, factory-built water treatment plant similar and equal to TRI-MITE™, Model TM-_____, manufactured by Wheelabrator Engineered Systems Inc., P.O. Box 36, Sturbridge, MA 01566. The equipment shall be suitable for indoor installation and have a nominal capacity of ___gpm. The equipment shall be hydraulically and electrically tested prior to shipment.

The plant supplied shall be simple to operate and maintain. All major plant functions shall be automated. The plant shall operate at the nominal rate, shifting down automatically as required to backwash the filter and clean the Adsorption Clarifier™ chamber. The plant shall accommodate the introduction of floc-forming chemicals. Coagulant and polymer shall be added to the influent.

The treatment plant shall include chemical treatment, Adsorption Clarification™, Mixed Media filtration, automatic process valves and controls, an air scour blower and automatic coagulation control.

The equipment, controls, and piping shall be suitable to accommodate the future addition of a second unit of the same size. Unit number 1 shall contain the blower, backwash pump, programmable controller, coagulant controller and effluent turbidimeter which will be common to both units. These components will not have to be supplied as part of the second unit, if one is installed.

All equipment specified in this section shall be provided by one manufacturer to ensure a properly designed system. The manufacturer's experience must include at least 500 million gallons per day of installed high-rate filtration capacity in operation for at least five years.

The contractor shall pay royalty or license fees for use of patented devices or systems and shall protect the Owner from patent infringement litigation thereon.

Suppliers other than the above named company wishing to quote on equipment in this section shall make a pre-bid submittal 30 days prior to bid. This bid shall include process and design capabilities as evidenced by extended pilot studies of installations, and maintenance of a highly qualified quality control and service organization. Written approval to quote must be obtained from the engineer at least 15 days prior to bid opening and will only be recognized by addendum.

Treatment Process

Chemical Treatment. The chemical feed systems shall include three separate metering pumps, each independently adjustable to feed coagulant, polymer, and a third chemical. Each feeder shall include a suction hose, strainer, chemical-resistant tank, and mixer.

Automatic Chemical Control. Controls shall be provided to automate the primary coagulation dosage. Filter effluent turbidity shall be monitored and compared to an operator-adjustable setpoint. Coagulant dosage shall be adjusted automatically to bring the effluent turbidity to the setpoint. The unit shall have an adjustable deadband to minimize dosage overshoot. Dosage adjustments shall be proportional to the deviation from the setpoint. The unit will be contained within the main control panel.

Adsorption Clarifier™. The Adsorption Clarifier™ shall have a total area of _____ square feet. Adsorption clarification shall be accomplished using granular adsorption media specifically manufactured for use in water treatment. The media shall be designed to optimize the removal of coagulated particles with a minimum of headloss development. The material shall be of a type that has been demonstrated to achieve this performance in more than 100 full-scale installations. The clean bed headloss through the Adsorption Clarifier™ shall be less than 18 inches at a 10 gpm/sq. ft. upflow rate.

The adsorption media shall be of specific gravity less than 1.0, so as to be buoyant, and shall be easily fluidized with application of diffused air.

The adsorption media shall be retained by a corrosion-resistant assembly that allows free passage of water, but contains the granular adsorption media particles. The retainer shall be accessible and removable from the top of the tank.

The Adsorption Clarifier™ shall be equipped with an air scour system consisting of a fixed distribution grid. The air distribution laterals shall be constructed of corrosion-resistant material. The compartment shall be provided with a screened outlet to permit draining of water without loss of adsorption media.

Filtration. The total filter area shall be _____square feet. The effluent system shall include a pump and a level-responsive valve arranged so that the plant effluent matches the flow entering the plant. The filter shall be equipped with auxiliary air scour to enhance the backwash efficiency. The filter media shall be a 30-inch deep Mixed Media bed composed of three materials, each of different size and specific gravity, providing uniform void gradation from coarse to fine in the direction of flow. The top of the bed shall consist of material of approximately 1.2 mm particle size and the bottom of approximately 0.3 mm particle size. The materials shall be carefully designed and selected by the treatment plant manufacturer.

The TM-50A, TM-75A, and TM-100A shall have filter materials retained directly on a Johnson stainless steel channel-rod screen so as to eliminate the need for support gravel.

The TM-175A and TM-350A will be provided with media support gravel designed for the PVC pipe lateral underdrain system. Filter materials for TM-175A and TM-350A shall be shipped in bags for installation.

Low Pressure Air Supply. Low pressure air for scouring of the Adsorption Clarifier™ and Mixed Media filtration materials shall be supplied by a two-stage regenerative type blower with a cast aluminum alloy impeller and blower housing. The unit shall be dynamically balanced, have a close coupled ODP motor and include intake and exhaust silencers. Bearings shall be double sealed and permanently lubricated.

Plant Construction. The major components shall be of the size and configuration shown on the plans. The tankage outside walls shall be fabricated of _____ suitably braced and supported. In no case shall a single wall separate filtered water and unfiltered water. The double bulkhead shall be provided with free drainage.

The arrangement of treatment modules, auxiliary devices and supporting equipment shall provide ready access for maintenance.

Surface Preparation. Oil, grease, dirt, rust, millscale and foreign matter shall be removed from the interior tankage surface by a method defined by Steel Structures Painting Council Spec SSPC-SP10 and exterior by Spec SSPC-SP6. Tankage interior and exterior shall receive at the factory two coats of high build epoxy finish protective coating, to a thickness of 7 to 11 mils, suitable for potable water service. Tank bottom shall be bare, for placement into a mastic base pad coating. (Aluminum and stainless steel tankage shall have a matte exterior finish produced by sandblasting and shall not be painted.)

Plant Process Valves. Automatic valves with motor actuators shall be provided for process valves. Valves 2" and smaller shall be ball type with bronze body, brass ball and Teflon** seats. Valves 2½" and larger shall be wafer butterfly valves with aluminum bronze disc, Buna N seat and stem seals, and iron body.

Motor actuators shall have 120V, 60 Hz supply, NEMA 4 enclosure.

A manual wafer-type butterfly valve, complete with operating lever, shall be provided for backwash rate setting.

Automatic valves shall be provided for effluent, Adsorption Clarifier™ scour, filter scour, backwash inlet, waste, and filter drain-down.

An optional filter to waste valve also can be provided.

Plant influent flow shall be adjustable by a manual rate set valve. Plant effluent flow shall be maintained by a level-responsive control valve.

Automatic influent valves shall be provided on dual unit installations.

Plant Control. The treatment plant valve sequencing and coagulant dosage adjustment shall be executed by a solid-state programmable logic controller. The controls shall be completely assembled and mounted in a NEMA 12 enclosure. The control panel shall provide for automatically starting and stopping the plant's raw water pumps and chemical feed pumps, based on clearwell level or manual override.

The control system shall provide means for automatically initiating cleaning of the Adsorption Clarifier™ by elapsed time or a preset, but adjustable, pressure sensor. Manual initiate also shall be provided. The control system shall include an interlock so that only one Adsorption Clarifier™ can be cleaned at a time in dual tank systems. During the flush cycle, collected solids shall be removed by proper sequencing of valves and blower. Return to service shall be automatic.

The control system shall provide means for automatically initiating backwash of the Mixed Media filter by a preset, but adjustable, filter headloss sensor or elapsed time. Manual initiate shall also be provided. The control system shall include an interlock so that only one filter can backwash at a time in dual tank systems. When a Mixed Media backwash cycle is initiated, the Adsorption Clarifier™ is flushed first, immediately followed by a filter backwash. The control system shall automatically sequence valves and pumps during the backwash cycle. Return to service shall be automatic.

The control system will also automatically initiate a backwash on effluent high turbidity and will shut the plant down and initiate an alarm should the backwash fail to substantially reduce effluent turbidity after an operator selected time delay setting.

Pumps. The treatment plant manufacturer shall provide factory-installed effluent and backwash pumps. Pumps shall be centrifugal, end suction, close coupled with ODP Motor. (See Technical Data Sheet.)

Electrical Equipment. The power supply to load center shall be _____. (See Technical Data Sheet.)

Pump and blower motors shall be open drip-proof construction with 40°C rise rating. Motor starters shall be housed in NEMA 1 enclosures and are factory installed and wired.

Preassembly. TM-50A, TM-75A and TM-100A units will be entirely factory preassembled with both clarifying and filter media installed. Installation requirements will include proper location of the unit on the jobsite base pad and completion of electrical and piping connections to and from the unit.

The TM-175A and TM-350A installation requirements will include proper location of the unit on the base pad and completion of electrical and piping connections to and from the unit, as well as field installation of clarifier media, filter media and support gravel.

Plant Start-up and Operator Training. The treatment plant manufacturer shall provide _____ days of plant start-up and operator training. Training shall be conducted by a factory-trained serviceman employed by the manufacturer.

An additional _____ day(s) of technical direction shall be provided for media placement in TM-175A and TM-350A units.

Operator's Manual. The treatment plant manufacturer shall furnish three Owners Manuals which shall provide complete instructions for installation, start-up, operation and maintenance.

**Teflon is a registered trademark of Dupont Corp.*

TRI-MITE DATA SHEET-4134 4/94 PRINTED IN U.S.A.

For more information:

Wheelabrator Engineered Systems Inc.

441 Main Street
Box 36 Route 20
Sturbridge, MA 01566
508/347-7344
FAX 508/347-7049

© 1993, 1994 A WHEELABRATOR TECHNOLOGIES COMPANY
RECYCLED PAPER, 10% POST CONSUMER WASTE

carboline®

SUPER HI-GARD 894 LT

(Formerly 2191-260)

VOC+ PLUS

SELECTION DATA

GENERIC TYPE: Two-component, cross-linked epoxy.

RECOMMENDED USE: SUPER HI-GARD 894 LT is primarily used as a finish coat for in-shop or maintenance applications where speed of cure is needed at low temperatures. May be used as a two coat system direct to metal for potable water immersion or other process water exposure.

GENERIC PROPERTIES: SUPER HI-GARD 894 LT is a high solids epoxy coating used for low temperature applications or when rapid time to handle or recoat is required. Features include:

- May be applied and will cure down to 35°F (2°C).
- May be applied direct to metal as a two coat system.
- Is dry to handle and cures faster than most other epoxies.
- Meets stringent VOC (Volatile Organic Content) regulations.
- Has an extended maximum recoat window.

REGULATORY ACCEPTANCE and COMPLIANCE:

Agency	Standards	Uses
UL*	ANSI/NSF Std. 61 UL Control No. 1P07	Potable Water Contact Tanks>1,000 gallons Pipes>6" ID
AWWA**	ANSI/AWWA C210-92	Interior & Exterior of Steel Potable Water Pipes

*Underwriters Laboratory
**American Water Works Association

NOT RECOMMENDED FOR: Immersion service other than water, sugar or salt solutions, except as recommended.

TYPICAL CHEMICAL RESISTANCE GUIDE:

Exposure	Immersion	Splash & Spillage
Salt Solutions	Excellent	Excellent
Sugar Solutions	Excellent	Excellent
Water	Excellent	Excellent
Alkalies	Very Good	Excellent
Acids	Not Recommended	Very Good
Solvents	Not Recommended	Very Good

TEMPERATURE RESISTANCE: (Non-immersion*):
Continuous: 200°F (93°C)
Non-continuous: 250°F (121°C)
*At 250°F coating discoloration and loss of gloss is observed, without loss of film integrity.

Immersion temperature resistance depends upon exposure. Consult Carboline Technical Service Department for specific information. It is recommended that metal tanks operating above 140°F (60°C) be insulated.

SUBSTRATES: Apply over suitably prepared metal, concrete, or other surfaces as recommended.

MAR 95 Replaces JAN 95N

COMPATIBLE COATINGS: May be applied directly over inorganic zincs or epoxies. May be topcoated with a variety of generic types including epoxies, polyurethanes and acrylics. Consult Carboline Technical Service for specific recommendations. A mist coat is recommended for applications over inorganic zinc primers.

SPECIFICATION DATA

THEORETICAL SOLIDS CONTENT OF MIXED MATERIAL:

	By Volume
SUPER HI-GARD 894 LT	76% ± 2%

VOLATILE ORGANIC CONTENT:*
The following are nominal values:

As Supplied: 1.57 lbs./gal. (188 gms./l)
Thinned: Utilizing Thinner #2

% Thinned	Fluid Ounces/Gal.	Pounds/ Gallon	Grams/ Liter
6%	8	1.88	227
12.5%	16	2.18	261
20%	25	2.49	299

*Varies with color

RECOMMENDED DRY FILM THICKNESS PER COAT:
4-8 mils (100-200 microns) is normally recommended
2-3 mils (50-75 microns) as a fabrication primer

Dry film thickness in excess of 10 mils (250 microns) per coat is not recommended.

THEORETICAL COVERAGE PER MIXED GALLON:
1219 mil sq. ft. (30 sq. m/l at 25 microns)
306 sq. ft. at 4 mils (8.0 sq. m/l at 100 microns)

Mixing and application losses will vary and must be taken into consideration when estimating job requirements.

STORAGE CONDITIONS: Store Indoors
Temperature: 40-110°F (4-43°C)
Humidity: 0-100%

SHELF LIFE: Twenty-four months when stored at 75°F (24°C).

COLORS: 0500 Red Oxide, 3216 Brown, S800 White, 1131 Blue, C703 Medium Gray, 0794 Light Gray

GLOSS: High gloss (Epoxies lose gloss, discolor and eventually chalk in sunlight exposure).

ORDERING INFORMATION

Prices may be obtained from your Carboline Sales Representative or Carboline Customer Service Representative.

APPROXIMATE SHIPPING WEIGHT:

	2 Gal. Kit	10 Gal. Kit
SUPER HI-GARD 894 LT	27 lbs. (12.2 kg)	137 lbs. (62 kg)
THINNER #2	8 lbs. (4 kg)*	39 lbs. (18 kg)**

* One Gallon Unit
** Five Gallon Unit

FLASH POINT: (Setaflash)

SUPER HI-GARD 894 LT Part A	24°F	(16°C)
SUPER HI-GARD 894 LT Part B	80°F	(27°C)
THINNER #2	24°F	(-5°C)

0880

To the best of our knowledge the technical data contained herein are true and accurate at the date of issuance and are subject to change without prior notice. User must contact Carboline Company to verify correctness before specifying or ordering. No guarantee of accuracy is given or implied. We guarantee our products to conform to Carboline quality control. We assume no responsibility for coverage, performance or injuries resulting from use. Liability, if any, is limited to replacement of products. Prices and cost data, if shown, are subject to change without prior notice. NO OTHER WARRANTY OR GUARANTEE OF ANY KIND IS MADE BY CARBOLINE, EXPRESS OR IMPLIED, STATUTORY, BY OPERATION OF LAW, OR OTHERWISE, INCLUDING MERCHANTABILITY AND FITNESS FOR A PARTICULAR PURPOSE.

Clincher® TYPE 2000
SCREWED END BALL VALVES
¼″ to 2″

BULLETIN B10

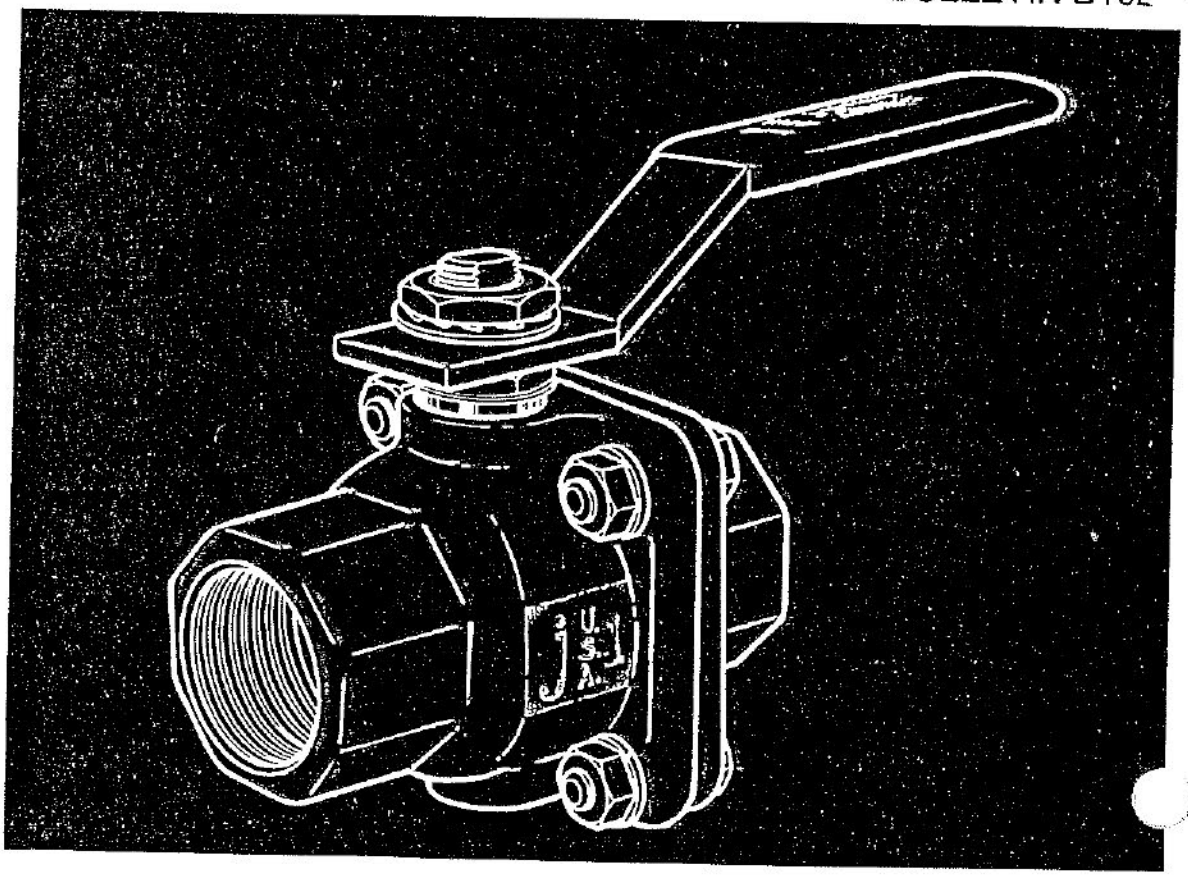

NELES-JAMESBURY

RUGGEDNESS, HIGH PERFORMANCE AND VERSATILITY WITH *Clincher*® VALVES

Clincher ball valves provide users with a rugged type of valve to handle an extremely wide variety of liquids, gases, and slurries, ranging from air and water to highly corrosive fluids.

The combination of operating advantages that a ball valve gives plus completely reliable tight sealing performance resulting from Neles-Jamesbury's unique seat design makes the *Clincher* a natural choice for the valve to be used as a standard in any process plant or other system requiring valves in various materials of construction.

Opening and closing the valve requires only a quick quarter-turn with the insulated handle–action ideal for automatic operation. The valve gives high flow capacity without obstruction–flow can be in either direction. With TFE seats and seals, lubrication is never required.

These compact valves are of two-piece body construction, allowing larger port diameters and ease of maintenance. *Clincher* port sizes are nearly the same or the same as pipe diameter, depending on size, giving highest flow capacity per dollar of valve cost.

The valve stem is of internal entry design. Long life stem sealing is accomplished with two TFE box ring seals preloaded by Belleville washers, assuring extremely long cycle life.

When remote operation is required, or if valves are part of an automated system, Neles-Jamesbury pneumatic or electric actuators can be furnished with *Clincher* valves either factory-mounted or separately for field installation.

Valves in brass are rated for general service to 600 psi in 1/4"–1" sizes, to 400 psi in 1-1/4"–2" sizes, while carbon steel and 316 stainless steel valves are rated to 800 psi. On steam service, *Clincher* valves are rated to 150 psi when equipped with TFE seats or to 250 psi with filled TFE seats and stainless steel trim. See Bulletin B150-1. All valves are rated for vacuum service to 20 microns. See Bulletin B150-4.

Maximum temperature ratings are +400°F for TFE seated valves, +500°F for filled TFE seated valves, and +180°F for UHMW polyethylene-seated valves.

Clincher valves are optionally available in a fire-tested version, with the designation *Fire-Tite*®, for handling fuel oil, gasoline, and other flammable or hazardous products. In the event of fire and resulting loss of the polymeric seats in these valves, secondary metal surfaces provide effective shutoff of flow. A secondary stem seal and special body seal block leakage to the atmosphere. These valves meet American Petroleum Institute Standards 607 (Fire Test for Soft-Seated Valves). See Bulletin B151-2.

Standard Series 21 *Clincher* valves described in this bulletin are available in brass, carbon steel, 316 stainless steel, Alloy 20 and monel. In addition to these valves (body and trim of the same material), valves are available with the following trim options: 316 stainless steel, Alloy 20, monel, and Hastelloy C.®

Fire-Tite Series 23 valves are available entirely of carbon steel, with carbon steel body and 316 stainless steel trim, or entirely of 316 stainless steel. Also available for oil and gas industry applications is a series of these valves conforming to NACE (National Association of Corrosion Engineers) Specification MR-01-75

Type 2000 valves are available with body fasteners in several different materials for specific service conditions. Standard bolt/nut material is carbon steel. *Fire-Tite* Series 23 valve fasteners are ferritic steel (Grade B7/2H). For corrosive environments high alloy fasteners such as 300 series stainless steel or monel are available. To avoid such problems as stress corrosion cracking, consideration should be given to the nature of the atmosphere when selecting corrosion resistant fasteners. Fasteners for NACE MR-01-75 service are controlled heat treated (Grade B7M/2HM).

Series 21 valves are available in a configuration that is UL (Underwriters' Laboratories) listed and tagged accordingly for service categories in both the Gas and Oil Equipment and Fire Protection Equipment Lists. Valves in brass are also FM (Factory Mutual) approved for fire protection systems. See Approvals Bulletin T110-1.

Series of *Clincher* valves are available specially prepared for such critical services as chlorine and oxygen. See complete ordering information for these valves on page 6 under "Ordering *Clincher* Valves." For further details refer to Bulletin B150-2 and B150-3 respectively.

Clincher valves are optionally available with round handles. See Bulletin B160-7 for further information.

Hastelloy® is a registered trademark of Haynes International, Inc.

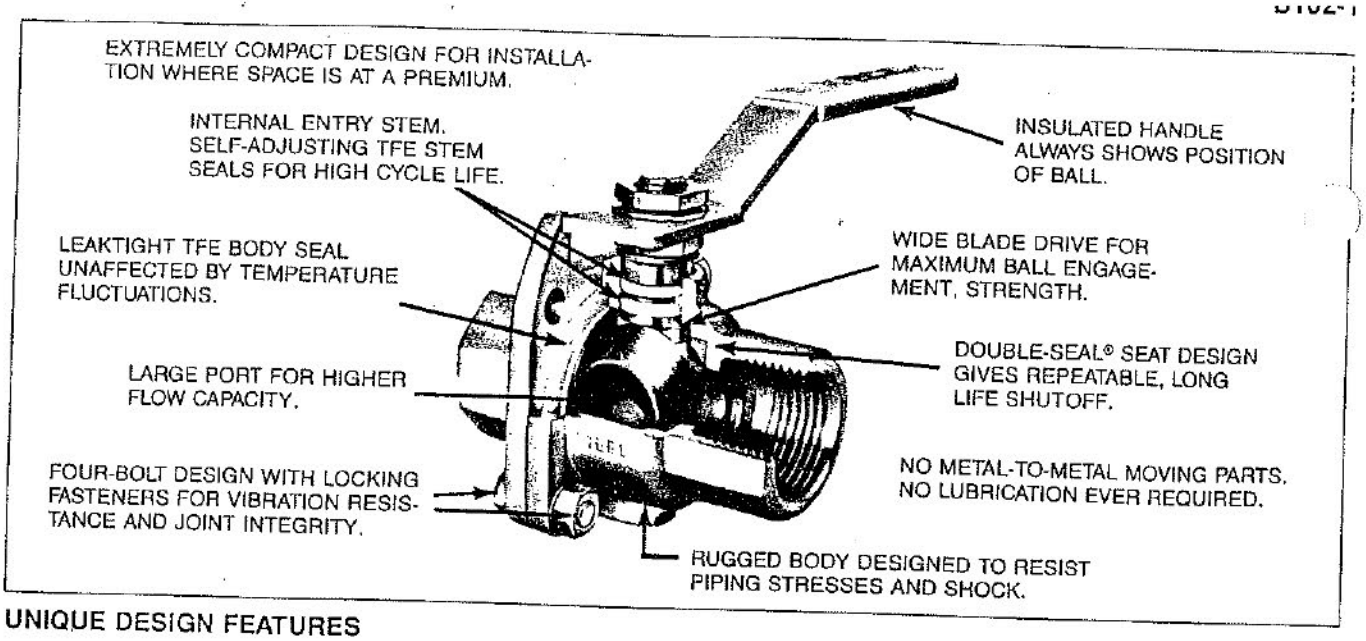

UNIQUE DESIGN FEATURES

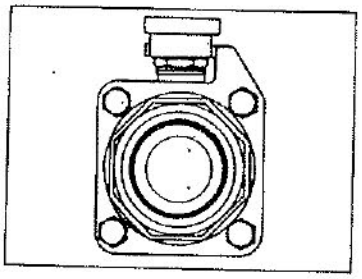

High Flow Capacity – In every valve size, *Clincher* valve port diameter is as large or larger than that of other comparable ball valves. Combined with price, the *Clincher* offers highest flow capacity in its price range.

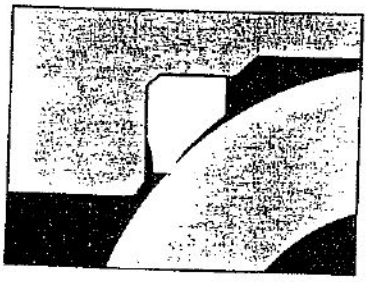

Unique Seat Design – Unique flexible-lip seats exert continuous sealing pressure, automatically compensate for wear and for changes in temperature and pressure, and provide extremely high cycle life.

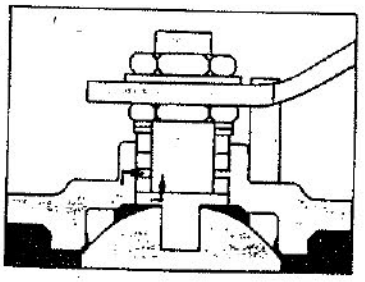

Stem Sealing – "Corner sealing", the compression of low-friction TFE box rings, eliminates stem leakage by avoiding straight-line leakage paths. Compression of seals is maintained by preload of Belleville washers.

VALVE SEAT RATINGS

These ratings are based on differential pressure with valve ball in the fully closed position and refer to seats only. Refer to valve body ratings to be sure that all components are satisfactory for the application. Valves in brass and carbon steel are suitable for service to −20°F, valves in 316 stainless steel (with stainless steel body bolts) to −100°F.

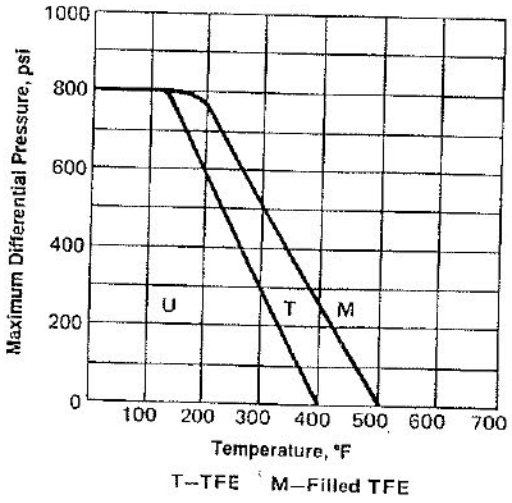

These ratings are a conservative guide for general service. Previous experience in a process or new developments may permit applications at ratings above those shown. Please consult Neles-Jamesbury's home office for specific recommendations.

1/4"–2" Series 2000 valves with filled TFE (M) seats are rated for saturated steam service to 250 psi when equipped with stainless steel trim. M-sealed valves are otherwise steam-rated to 200 psi.

FLOW DATA

The table below provides flow coefficients of valves covered in this bulletin. The C_v values represent the flow of water at +60°F through the valve in U.S. gallons per minute at a pressure drop of 1 psi.

Valve	C_v	Valve	C_v
1/4"	11	1"	49
3/8"	16	1-1/4"	49
1/2"	16	1-1/2"	100
3/4"	37	2"	115

VALVE BODY RATINGS

These are maximum working pressure ratings of valve body/body cap assemblies only. The seat ratings above determine the practical pressure limitations according to actual service conditions. Working pressure rating is at −20° to +100°F. Test pressure is for hydrostatic test with ball half open.

Valve Size		Body Material: Brass Body — ASTM A449 Body Bolts Code: -0	Brass Body — 300 Series SS Body Bolts Code: -3	Carbon Steel, 316 Stainless, Alloy 20, or Monel Body — ASTM A449, A193 Gr. B7 & B7M, K Monel Body Bolts Codes: -0, -1, -4, -5	Carbon Steel, 316 Stainless, Alloy 20, or Monel Body — 300 Series SS Body Bolts Code: -3
1/4"–1"	Working pressure	600 psi	400 psi	800 psi	400 psi
	Test pressure	900	600	1200	600
1-1/4"–2"	Working pressure	400	400	800	400
	Test pressure	600	600	1200	600

DIMENSIONS

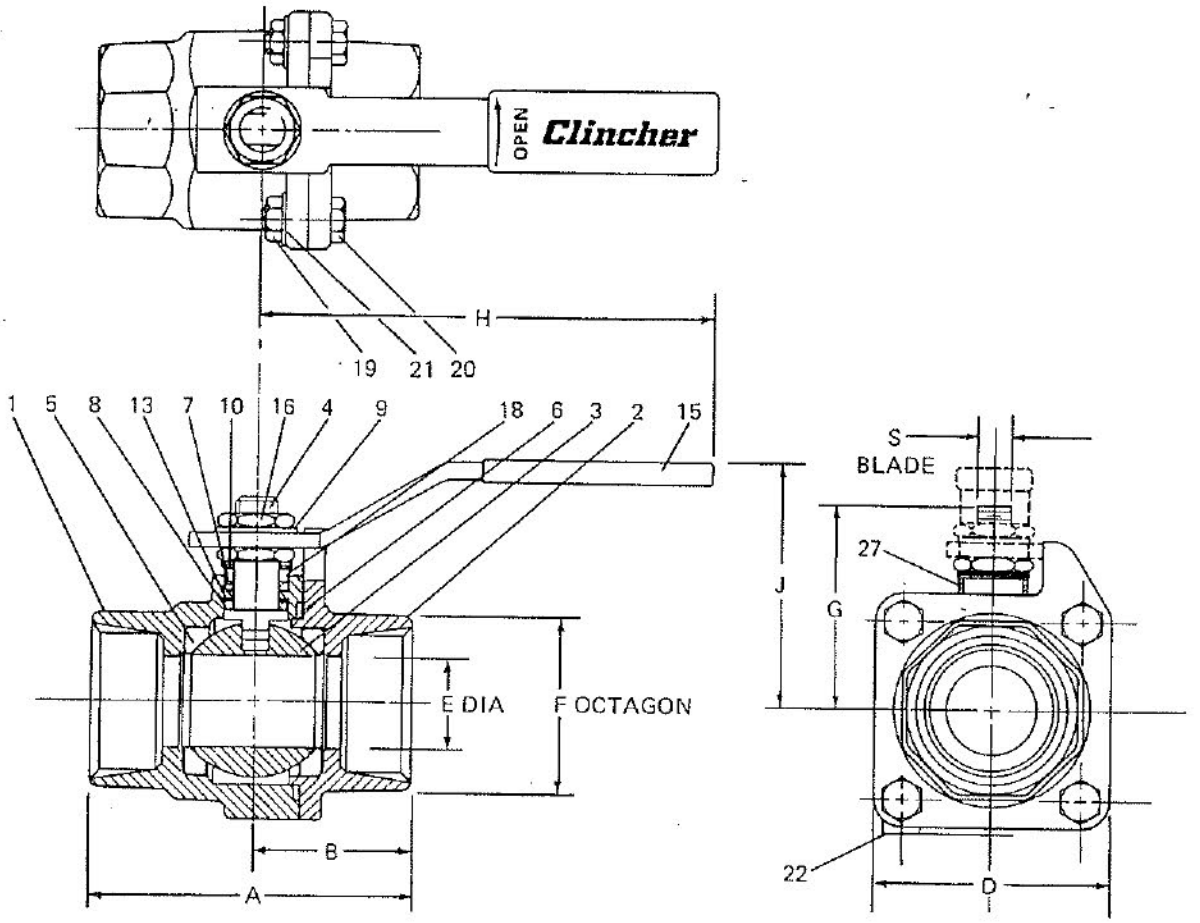

VALVE SIZE	BRASS A	All other Materials A	BRASS B	All other Materials B	D	E	F	G	H	J	S	WEIGHT (LBS.)
	APPROXIMATE DIMENSIONS (Inches)											
1/4"	2.34	2.50	1.25	1.25	1.81	.44	1.03	1.47	4.00	1.78	.19	1.1
3/8"	2.34	2.50	1.25	1.25	1.81	.50	1.03	1.47	4.00	1.78	.19	1.1
1/2"	2.34	2.50	1.25	1.25	1.81	.50	1.03	1.47	4.00	1.78	.19	1.1
3/4"	2.56	2.81	1.28	1.41	2.00	.69	1.25	1.63	4.00	1.91	.19	1.2
1"	3.06	3.41	1.53	1.70	2.44	.88	1.50	2.09	5.00	2.50	.31	2.3
1-1/4"	3.44	3.75	1.72	1.88	2.69	1.00	1.88	2.22	5.00	2.66	.31	3.2
1-1/2"	3.72	4.03	1.84	2.02	3.25	1.25	2.13	2.59	6.00	2.97	.38	4.8
2"	4.06	4.38	2.03	2.19	3.63	1.50	2.63	2.75	6.00	3.16	.38	6.8

BILL OF MATERIALS AND PARTS FOR *Clincher*® VALVES

Part No.	Part Name	Material						
		Standard					Fire-Tite®	
		Style 21-11	Style 21-22	Style 21-35	Style 21-36	Style 21-71	Style 23-22	Style 23-3
1	Body	Brass ASTM B30 Alloy 857	Carbon steel ASTM A181 Class 70	Alloy 20 Type CN7M	316 stainless steel Type CF8M	Monel ASTM A743 Grade M35-1	Carbon steel ASTM A181 Class 70	316 stainless steel Type CF8M
2	Body Cap	Brass ASTM B30 Alloy 857	Carbon steel ASTM A181 Class 70	Alloy 20 Type CN7M	316 stainless steel Type CF8M	Monel ASTM A743 Grade M35-1	Carbon steel ASTM A181 Class 70	316 stainless steel Type CF8M
3	Ball	Brass®, carbon steel (nickel under chrome plated), 316 stainless steel, Alloy 20, monel, or Hastelloy C					Carbon or 316 stainless steel	
4	Stem	Brass®, carbon steel, 316 stainless steel, Alloy 20, K monel, or Hastelloy C					Carbon, 316 stainless steel or Alloy 20	
5	Seat	TFE, or filled TFE - as specified						
6	Body Seal	TFE					Spiral wound 316 stainless steel and TFE	
7	Upper Stem Seal	TFE						
8	Lower Stem Seal	TFE						
9	Lock Washer	Carbon steel, stainless steel						
10	Spring Washer*	Carbon steel-zinc plated						
13	Secondary Stem Seal	Not required					Graphite	
15	Handle	Carbon steel or stainless steel**		Stainless steel	Carbon steel or stainless steel**	Stainless steel	Carbon steel	
16	Stem Nut	Carbon steel	Carbon steel, stainless steel or monel	Stainless steel	Carbon steel, stainless steel or monel	Monel	Stainless steel	
18	Compression Ring	Brass	316 stainless steel or monel	316 stainless steel	316 stainless steel or monel	Monel	316 stainless steel	
19	Hex Nut	Carbon steel or 300 series stainless	Carbon steel ASTM A194 Gr. 2H or 2M	ASTM A194 Gr. 2H or monel	Carbon steel ASTM A194 Gr. 2H, 2M or 300 series stainless	ASTM A194 Gr. 2H or monel	ASTM A194 Gr. 2H or 2M†	
20	Body Bolt	ASTM A449 or 300 series stainless	ASTM A449 or ASTM A193 Gr. B7M	ASTM A193 Gr. B7 or K monel	ASTM A449, ASTM A193 Gr. B7M or 300 series stainless	ASTM A193 Gr. B7 or K monel	ASTM A193 Gr. B7 or B7M	
21	Lock Washer	—	Carbon steel††	Monel	Carbon steel††	Monel	Carbon steel	
22	Tag	300 series stainless steel						
27	Top Ground Spring	Stainless steel	—					

*Furnished only on valves with brass, carbon steel, or 316 stainless steel ball.

**Stainless steel on monel valves, on valves with monel trim for chlorine service, and on valves with stainless steel body bolts.

†Valves furnished with actuators are equipped with ASTM A193 Gr. B7 bolts.

††Not required with ASTM A449 bolts. Stainless steel with 300 series stainless bolts.

®1/4"–3/4" brass valves equipped with actuator must have 316 stainless steel trim.

Required for NACE MR-01-75 service. Available as standard in *Fire-Tite* series only.

ORDERING *Clincher*® VALVES

Interchangeable trim (ball and stem) for *Clincher* valves in this bulletin permits selection of the most suitable and economical valve for either noncorrosive or mildly corrosive services.

To specify a valve it is necessary to select the combination of body and trim material meeting a particular service requirement and the appropriate body bolts for service and pressure requirements.

Clincher Valve Code–Catalog numbers are fully descriptive of a valve. They are made up of size and a ten-digit figure designation.

Seats are of TFE or filled TFE. Body seal is of TFE in standard valves and of TFE and 316 stainless steel in *Fire-Tite* valves. Stem seals are normally TFE.

Valve coding is shown below.

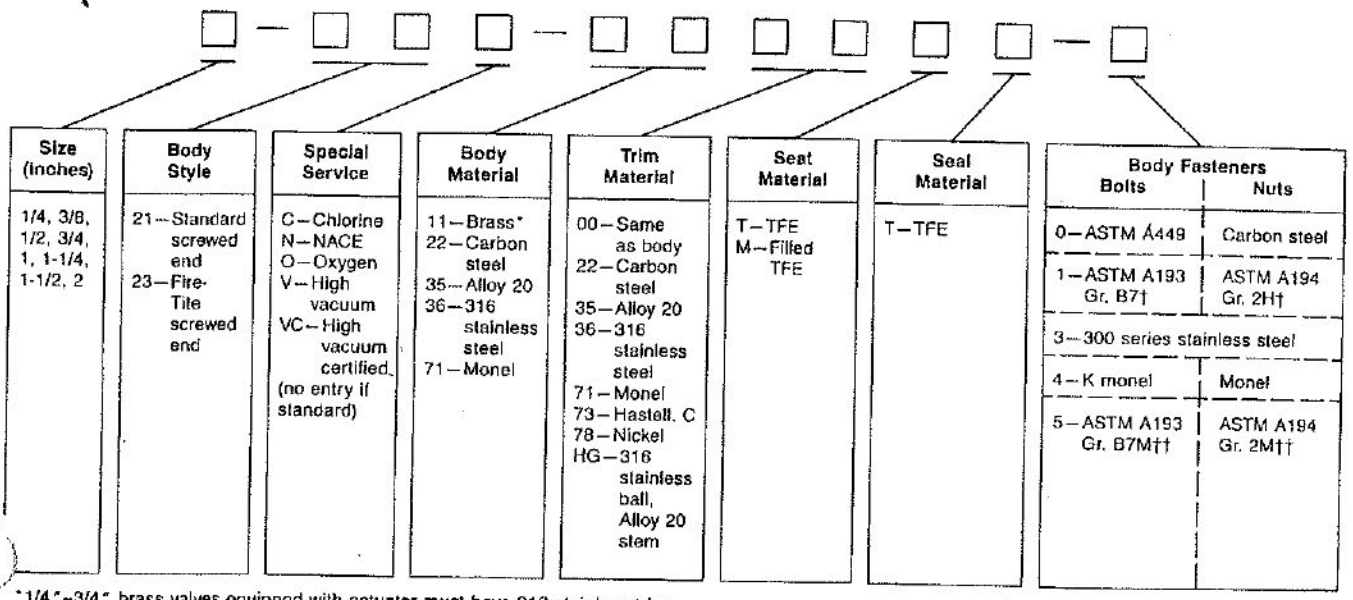

*1/4"–3/4" brass valves equipped with actuator must have 316 stainless trim.
**UHMW polyethylene seals not available in *Fire-Tite* valves.

†Required for *Fire-Tite* (23—) valves.
††Required for NACE MR-01-75 service.

Examples:

1. 1" standard screwed end *Clincher* valve (21) with brass body (11) and brass trim (00) with TFE seats and seals (TT) with standard ASTM A449 body bolts (0) is written: 1" Fig. 21-1100TT-0.
2. 2" fire-tested screwed end *Clincher* valve (23) with carbon steel body (22) and 316 stainless steel trim (36) with ASTM A193 Grade B7 body bolts (1) is written: 2" Fig. 23-2236MT-1.
3. 3/4" standard screwed end *Clincher* valve (21) cleaned for chlorine service (C) with carbon steel body (22) and monel trim (71) with filled TFE seats (M) and TFE seals (T) with ASTM A193 Gr. B7 bolts (1) is written: 3/4" Fig. 21C-2271MT-1.

Shown below are the figure designations for the different *standard* combinations of *Clincher* valve body, trim, seat, and body bolt materials that are available. Other combinations of materials are available on application.

STANDARD VALVES

21–1100TT–0
21–1100MT–0
21–1136TT–0
21–1136MT–0
21–2200TT–0
21–2200MT–0
21–2236TT–0
21–2236MT–0
21–3500TT–1
21–3500MT–1
21–3500TT–4
21–3500MT–4
21–3600TT–0
21–3600MT–0
21–3600TT–3
21–3600MT–3

FIRE-TITE® VALVES

23–2200TT–1
23–2200MT–1
23–2236TT–1
23–2236MT–1
23–3600TT–1
23–3600MT–1

NACE VALVES

23N–22HGTT–5
23N–22HGMT–5
23N–36HGTT–5
23N–36HGMT–5

CHLORINE VALVES

21C–2271MT–1
21C–2273MT–1
21C–7100MT–1*

*1/4"–1" only.

jamesbury

TYPE EL, EJ, EJX and ERC ELECTRIC ACTUATORS

BULLETIN 253

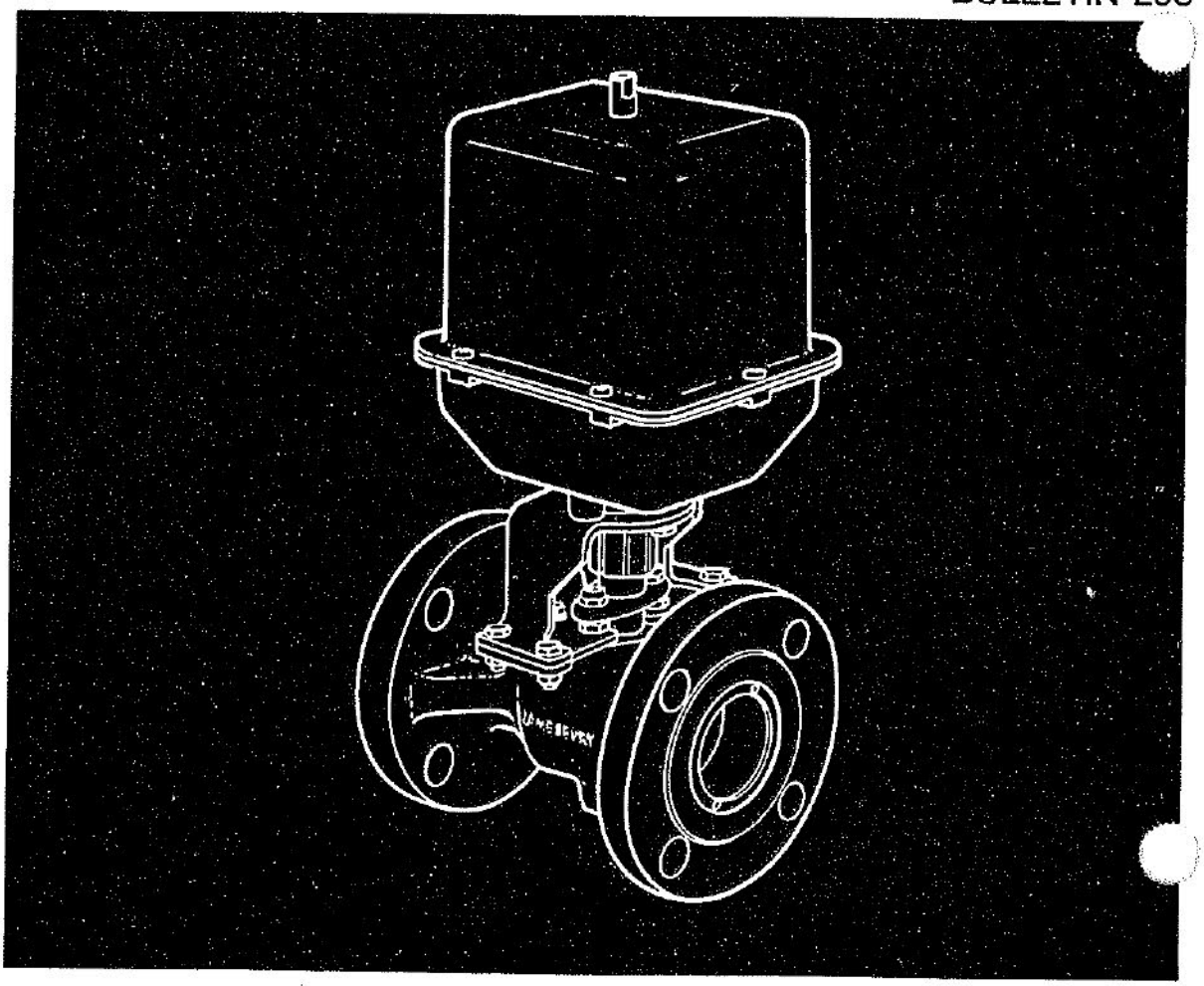

DIMENSIONS EJX 20, EJX 50, EJX 90 ACTUATORS

FM APPROVED

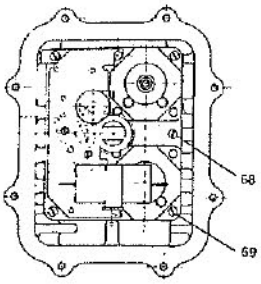

EJX SCHEMATIC DIAGRAM

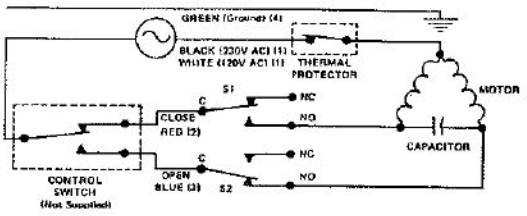

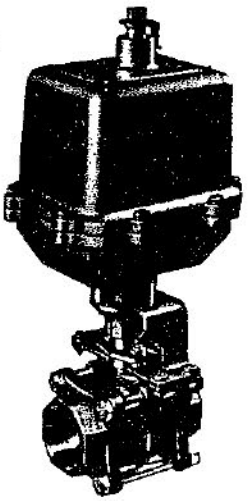

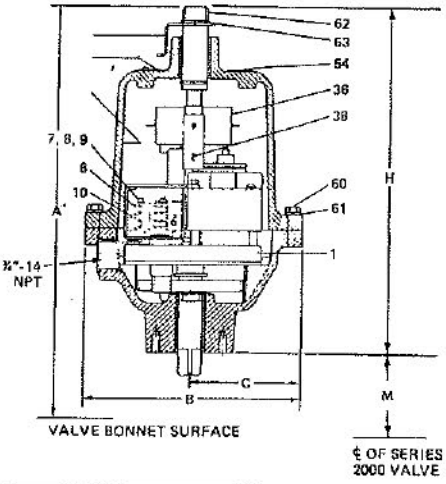

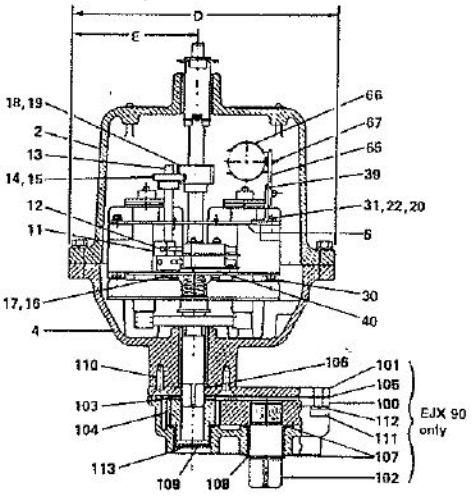

Numbers in parentheses indicate tag numbers of wire leads

See EL8 – EL20 Section for M dimensions

APPROXIMATE DIMENSIONS (inches)

Actuator	A	B	C	D	E	H
EJX 20	14-15/16	6-9/16	3-3/8	8-1/16	3-13/16	10 1/2
EJX 50	15-1/2	6-9/16	3-3/8	8-1/16	3-13/16	10-1/2
EJX 90	16-1/2	6-9/16	3-3/8	8-1/16	3-13/16	12-1/2

Dimension A varies slightly depending on valve type and size.

ERC 160, ERC 250 ACTUATORS

ERC SCHEMATIC DIAGRAM

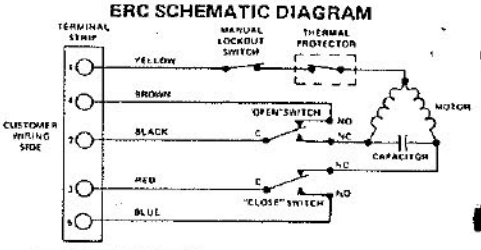

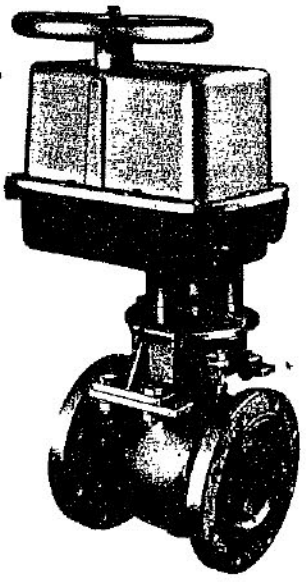

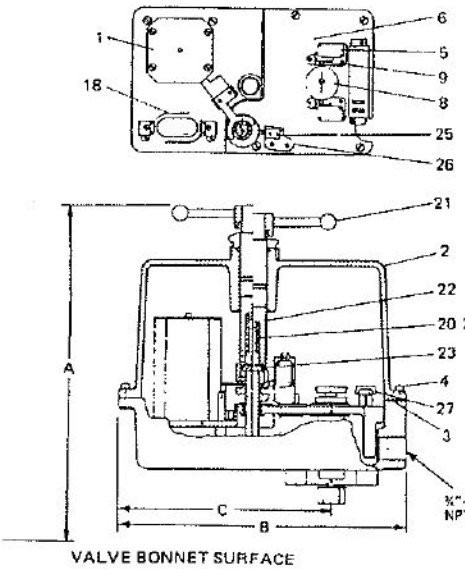

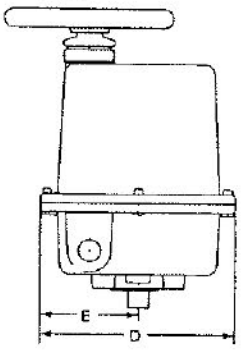

APPROXIMATE DIMENSIONS (inches)

Actuator	A	B	C	D	E
ERC 160	17-3/4	12-3/16	3-3/32	8-3/16	4-3/32
ERC 250	17-5/16	12-3/16	3-3/32	8-3/16	4-3/32

Dimension A varies slightly depending on valve type and size.

CL17 Chlorine Analyzer

Ideally suited for these applications:

- *Potable Water*
- *Wastewater Effluent*
- *Cooling Tower Water*
- *Food and Beverage Industry*
- *Reverse Osmosis Systems*
- *See page 116 for application flow diagrams*

Thousands of plants around the world use the CL17 to monitor disinfection.

Unattended Analysis

The low-cost, low-maintenance CL17 automatically performs a complete analysis every 2.5 minutes for free or total residual chlorine.

The CL17 uses only 473 mL of indicator and buffer per month and is no more costly to operate than an inexpensive test kit. Yet the CL17 provides around-the-clock monitoring information simply not available from grab sample testing.

Uses the DPD Chlorine Method

The CL17 uses an analytical procedure based on Method 408.E in *Standard Methods* (16th Edition) for drinking water. The DPD colorimetric method features sensitivity, speed, minimal fading and a buffering system that provides accurate results even with swings in pH or alkaline samples.

How Does It Work?

The pump/valve module controls the flow of incoming sample and meters controlled volumes of buffer and indicator reagents in a 2.5 minute cycle. A motor-driven cam operates pinch blocks that squeeze special thick-walled tubing against a fixed plate.

A portion of sample is captured in the colorimeter flow cell to measure blank absorbance (color intensity) before reagents are added. This allows compensation for any turbidity or natural color in the sample and provides an automatic zero reference point. Reagents are then added and a magnetic stirring motor thoroughly mixes sample and reagents. After color development, the color intensity is measured at 510 nm and compared to the reference. The difference between the two is used to calculate chlorine concentration.

Standard Features

- 0 to 5 mg/L range, 0.01 mg/L resolution, and automatic color/turbidity compensation
- Dual, fully-adjustable, set-point alarms signal the operator if concentration is outside programmed limits.
- Programmable voltage or current recorder output. A selectable recorder output of 0-10 mV, 0-100 mV, 0-1.0 Vac or 4-20 mA is standard.
- NEMA-12 enclosure to protect the analyzer. (Suitable for indoor applications.)
- Change from free to total by just changing the reagents.
- Automatic, self-testing diagnostics. The CL17 can detect a number of possible malfunctions and provide an alarm signal indicating a need for operator attention.
- Minimal maintenance required. Pump module tubing is replaced every six months while the remainder of the tubing is replaced annually.
- Listed by ETL to UL and CSA Safety Standards. Carries the European "CE Mark" for safety and EMC.

Specifications

Range: 0-5 mg/L free or total residual chlorine
Accuracy: Better than ±5% of reading or ±0.05 mg/L, whichever is greater
Resolution: 0.01 mg/L
Repeatability: Within ±0.05 mg/L
Minimum Detection: 0.05 mg/L
Cycle Time: One complete sample analysis every 2.5 minutes
Sample Inlet Pressure: 1-20 psig with single regulator and 20-120 psig with dual regulator (both provided)
Sample Flow Required: Minimum 100-500 mL/min flow rate
Recorder Output: Selectable for 0-10 mV, 0-100 mV, 0-1 Vac or 4-20 mA. Output span programmable over any portion of the 0-5 mg/L range
Alarms: Two sample concentration alarms, analyzer system warning and analyzer system shut-down alarms are each equipped with unpowered SPDT relays with contacts for 5 A resistive load at 230 Vac
Dimensions: 34 x 42 x 19 (13.5 x 16.5 x 7.5")
Shipping Weight: 11.3 kg (25 lb)

1. 3-DIGIT LED DISPLAY. Shows chlorine concentration.
2. ALARM 1. Set-point alarm indicator.
3. ALARM 2. Set-point alarm indicator.
4. SYSTEM ALARM LED. Indicates a malfunction requiring operator intervention for correction and restart.
5. SYSTEM WARNING INDICATOR. Indicates a minor malfunction requiring investigation. Instrument continues to operate.
6. ALARM 1 KEY. Enters/recalls set point.
7. ALARM 2 KEY. Enters/recalls set point.
8. RECORDER MAX KEY. Used to enter and recall full-scale value of the recorder output in mg/L Cl_2.
9. RECORDER MIN KEY. Used to enter and recall minimum value of the recorder output in mg/L Cl_2.
10. DIAGNOSTIC TEST KEY. Used to perform programming and self-test operations.
11. STANDARD SET KEY. Used to enter the value of a known standard or sample being supplied to the analyzer for calibration.
12. ZERO KEY. Sets zero reference point.
13. SYSTEM RESET KEY. Clears alarms and warnings.
14. NUMERIC KEYS. Enters numeric values.
15. Colorimeter.
16. Peristaltic Pump.

How To Order

Analyzers include a one-month supply of reagents, spare pump tubing, wall mounting kit and instruction manual. Power cord must be ordered separately. For information on optional sample conditioning equipment, including self-cleaning Y-strainer and head pressure regulator, see page 134. See page 136 for reagent ordering.

46780-01	CL17 Free Residual Chlorine Analyzer **Circle 4203 for more information.**	$2375.00
46780-02	CL17 Total Residual Chlorine Analyzer **Circle 4203 for more information.**	2375.00
44278-00	RS-232C Computer Interface Card (optional)	295.00
47216-00	Maintenance Kit. Contains reagent tubing, colorimeter lamp assembly, reagent caps and fittings to be replaced annually. Pump module tubing to be replaced at three to six month intervals.	70.00
46964-00	Power cord, 125 Vac, 10 A, 1.83 m (6')	10.00
47439-00	Power cord, 230 Vac, 10 A, 1.83 m (6'), Continental European plug	10.00

Need a Power Cord?

Hach recommends all process instruments be hooked up with rigid conduit systems and hardwired into a facility's power system. Power cords are now considered optional accessories and must be purchased separately.

TECHNOCHECK
MALE THREADED ENDS

STYLE 5002

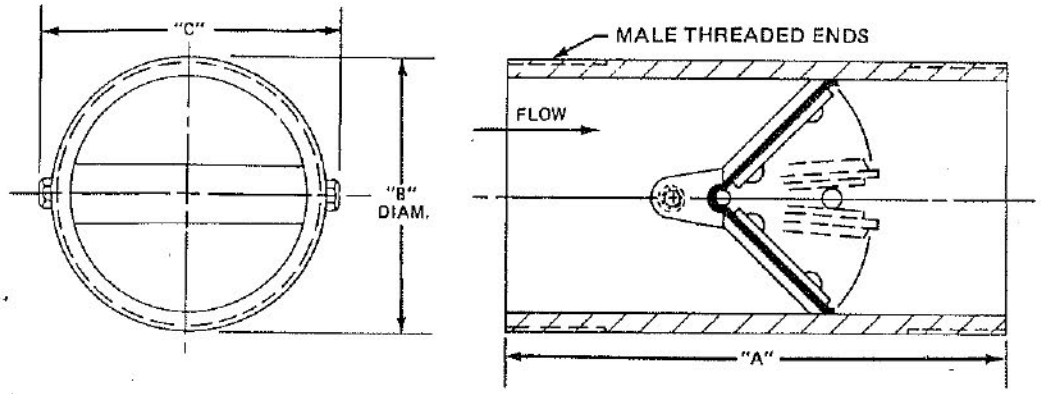

GENERAL DIMENSIONS FOR STYLE 5002

VALVE SIZE	"A"	"B"	"C"	VALVE SIZE	"A"	"B"	"C"
1	3-1/2	1.315	1-5/8	4	6	4-1/2	4-7/8
1-1/4	3-1/2	1.660	2	5	7	5-9/16	6-1/8
1-1/2	4	1.900	2-1/4	6	8	6-5/8	7-1/8
2	4	2-3/8	2-3/4	8	10	8-5/8	9-1/2
2-1/2	5	2-7/8	3-1/4	10	12	10-3/4	11-1/2
3	5-1/2	3-1/2	3-7/8	12	14	12-3/4	13-3/4

ALL DIMENSIONS IN INCHES

STANDARD MODELS & MATERIALS

STYLE	BODY	INTERNALS	PSI C.W.P.
5002-AL	Aluminum	Aluminum	50
5002-BR	Brass	Brass	150
5002-304	304 Stainless Steel	304 Stainless Steel	150
5002-316	316 Stainless Steel	316 Stainless Steel	150
5002-Class A	Steel	Aluminum	150
5002-Class D	Steel	Cadmium Plated Steel	150
Standard Elastomer: Buna-N			

OPTIONAL MATERIAL SELECTION

INTERNAL MATERIALS

- Aluminum
- Bronze
- 304 Stainless Steel
- 316 Stainless Steel
- Cadmium Plated Steel
- Electroless Nickel Plated Steel or Aluminum
- Monel*
- Titanium*
- Hastelloy*

*Non stock item – Available upon request.

SPRING MATERIALS

- 304 Stainless Steel
- 316 Stainless Steel

Monel and Inconel springs available upon request.

SEALING MEMBER MATERIALS

MATERIAL	*TEMPERATURE RANGE
• Buna-N • Neoprene • Butyl • Hypalon • EPDM • Viton • Teflon • Silicone • FDA Approved White Neoprene	

*This temperature range is for general guidance. The figures may vary with application.

CONSULT FACTORY FOR MATERIALS, SIZES AND PRESSURE RATINGS NOT SHOWN.

• COMBINATION END CONFIGURATIONS ALSO AVAILABLE.

FLAT-BOTTOM CYLINDRICAL TANKS – Nominal Wall Thickness By Resin

XLPE, Heavyweight			PP, Heavyweight		PVDF		Approx. Shipping Weight, lb.		
Natural Cat. No. 11300	Black Cat. No. 18300	W/Casing Cat. No. 19300 Tank Casing	Natural Cat. No. 11200	W/Casing Cat. No. 19200 Tank Casing	Natural Cat. No. 11500	W/Casing Cat. No. 19500 Tank Casing	TANK Light	TANK Heavy	W/Casing
3/16	††	††	3/16	††	3/32	††	4†	5 1/2†	N/A
3/16	††	††	3/16	††	N/A	††	4 1/2†	7†	N/A
3/16	††	††	3/16	††	3/32	††	7†	8†	N/A
3/16	††	††	3/16	††	3/32	††	8†	11 1/2†	N/A
3/16	3/16	3/16 3/16	3/16	3/16 3/16	3/32	3/32 3/16	12†	19†	42†
1/4	1/4	1/4 3/16	1/4	1/4 3/16	1/8	1/8 3/16	18	27	53
1/4	1/4	1/4 3/16	1/4	1/4 3/16	N/A	N/A N/A	N/A	50	80
1/4	1/4	1/4 3/16	1/4	1/4 3/16	N/A	1/8 3/16	N/A	50	80
1/4	1/4	1/4 3/16	1/4	1/4 3/16	N/A	1/8 3/16	N/A	60	135
1/4	1/4	1/4 3/16	1/4	1/4 3/16	N/A	1/8 3/16	N/A	80	160
1/4	1/4	1/4 3/16	1/4	1/4 3/16	N/A	1/8 3/16	N/A	110	200
1/4	1/4	1/4 3/16	1/4	1/4 3/16	N/A	N/A	N/A	120	220
N/A	N/A	N/A N/A	N/A	N/A N/A	N/A	N/A	N/A	190	325
N/A	N/A	N/A N/A	N/A	N/A N/A	N/A	N/A	N/A	300	500
150°F 65°C			220°F 104°C		230°F 110°C				

Please order by Cat. No. and Size Code. For Example, a 100-gal. Natural HDPE tank would be: Cat. No. 11100, Size Code-0100.

Maximum service temperature listings refer to temperatures that should not be exceeded for the materials utilized in the specific product line. Many factors, such as chemical resistance, specific gravity, external stresses, product geometry, environment and many others affect the suitability of a particular product. For additional information, contact Nalge Company.

WARNING: Never use FRP casings alone as a tank. Always use a liner. For continuous service at elevated temperatures or storage of high specific-gravity materials, always use an FRP casing with your tank.

Please call your distributor to order these NALGENE Industrial Products

FLAT-BOTTOM CYLINDRICAL TANKS - Nominal Wall Thickness By Resin

CYLINDRICAL TANKS

Cat. No. 11100

Cat. No. 18100

Cat. No. 54102

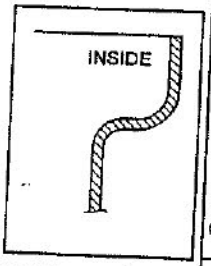

)ped-Flange Design

...ion cover

Size	Grad. Gal./Liter	Size Code	Nom. Tank Dimensions O.D. x Depth, in. *casing*	HDPE, Heavyweight				HDPE, Lightweight	
				Natural Cat. No. 11100	Black Cat. No. 18100	W/Casing Cat. No. 19100 Tank Casing	W/Spigot Cat. No. 11102**	Natural Cat. No. 54100	W/Spigot Cat. No. 54102**
5 Gals.	0.5/2	-0005	11 x 15	3/16	††	††	3/16	3/32	3/32
7.5 Gals.	0.5/*	-0007	12 x 18	3/16	††	††	3/16	3/32	3/32
10 Gals.	1/*	-0010	13 x 20	3/16	††	††	3/16	3/32	3/32
15 Gals.	1/4	-0015	13 x 27	3/16	††	††	3/16	3/32	3/32
30 Gals.	2.5/10	-0030	18 x 30 *19-1/8 x 30-1/4*	3/16	3/16	3/16 3/16	3/16	3/32	3/32
55 Gals.	2.5/10	-0055	22 x 36 *23 x 36-1/4*	1/4	1/4	1/4 3/16	1/4	3/32	3/32
80 Gals.	5/20	-0080	24 x 48 *24-3/4 x 48-1/4*	1/4	1/4	1/4 3/16	N/A	N/A	N/A
100 Gals.	5/20	-0100	28 x 44 *29-3/16 x 44-1/4*	1/4	1/4	1/4 3/16	N/A	N/A	N/A
150 Gals.	10/40	-0150	31 x 49 *32-7/16 x 49-1/4*	1/4	1/4	1/4 3/16	N/A	N/A	N/A
200 Gals.	25/200	-0200	36 x 51 *37-1/2 x 51-1/4*	1/4	1/4	1/4 3/16	N/A	N/A	N/A
275 Gals.	25/100	-0275	42 x 49 *43-1/2 x 49-1/4*	1/4	1/4	1/4 3/16	N/A	N/A	N/A
360 Gals.	25/100	-0360	48 x 49 *48-3/8 x 49-1/4*	1/4	1/4	1/4 3/16	N/A	N/A	N/A
500 Gals.	25/100	-0500	53 x 62 *54-1/8 x 62-1/4*	5/16	N/A	5/16 3/16	N/A	N/A	N/A
1,000 Gals.	25/100	-1000	66 x 72 *67-1/2 x 72-1/4*	7/16	N/A	7/16 3/16	N/A	N/A	N/A
MAXIMUM SERVICE TEMPERATURE:				150°F 65°C		220°F 104°C	150°F 65°C	140°F 60°C	

*NALGENE 7.5- & 10-gal. cylindrical tanks do not have liter calibrations.
††These sizes quoted on request.
N/A = Not Available
**For replacement spigot, see page 24
† Within UPS size restrictions.

DR S543
High Pressure Regenerative Blower

FEATURES
- Manufactured in the USA
- CE compliant – Declaration of Conformity on file
- Maximum flow: 80 SCFM
- Maximum pressure: 205 IWG
- Maximum vacuum: 11.8" Hg
- Standard motor: 5 HP, ODP
- Cast aluminum blower housing, impeller & cover; cast iron flanges (threaded)
- UL & CSA approved motor with permanently sealed ball bearings
- Quiet operation within OSHA standards when properly piped or muffled – 1 muffler included

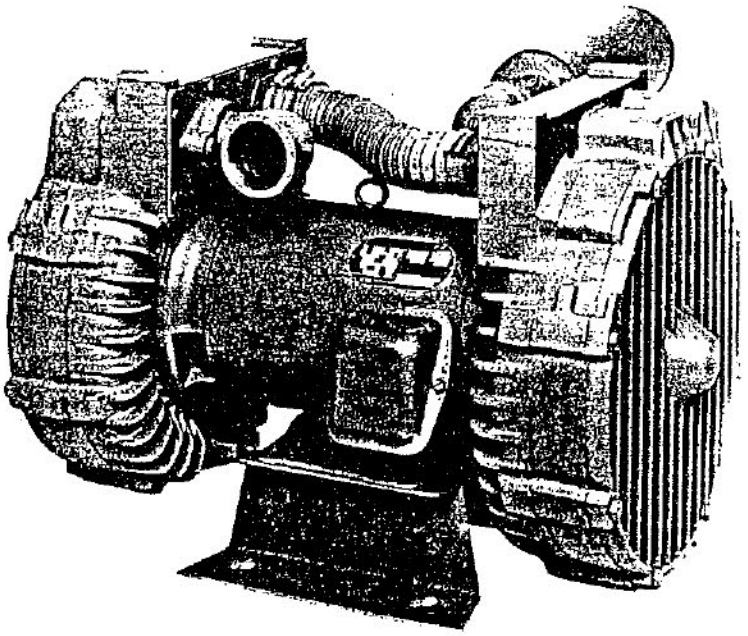

MOTOR OPTIONS
- International voltage & frequency (Hz)
- Chemical duty, high efficiency, inverter duty or industry-specific designs
- Various horsepowers for application-specific needs

BLOWER OPTIONS
- Corrosion resistant surface treatments & sealing options
- Remote drive (motorless) models
- Slip-on or face flanges for application-specific needs

ACCESSORIES (See Catalog Accessory Section)
- Flowmeters reading in SCFM
- Filters & moisture separators
- Pressure gauges, vacuum gauges & relief valves
- Switches – air flow, pressure, vacuum or temperature
- External mufflers for additional silencing
- Air knives (used on blow-off applications)

BLOWER PERFORMANCE AT STANDARD CONDITIONS

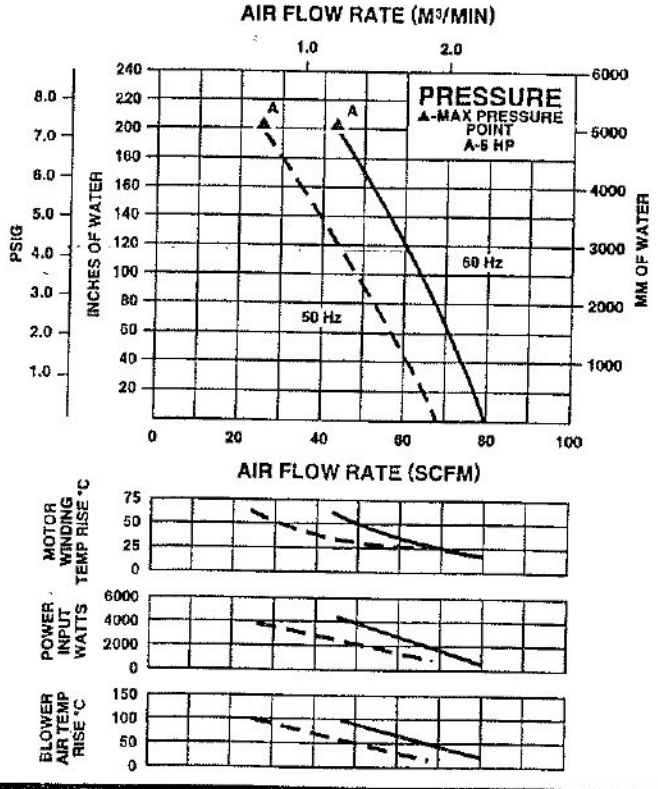

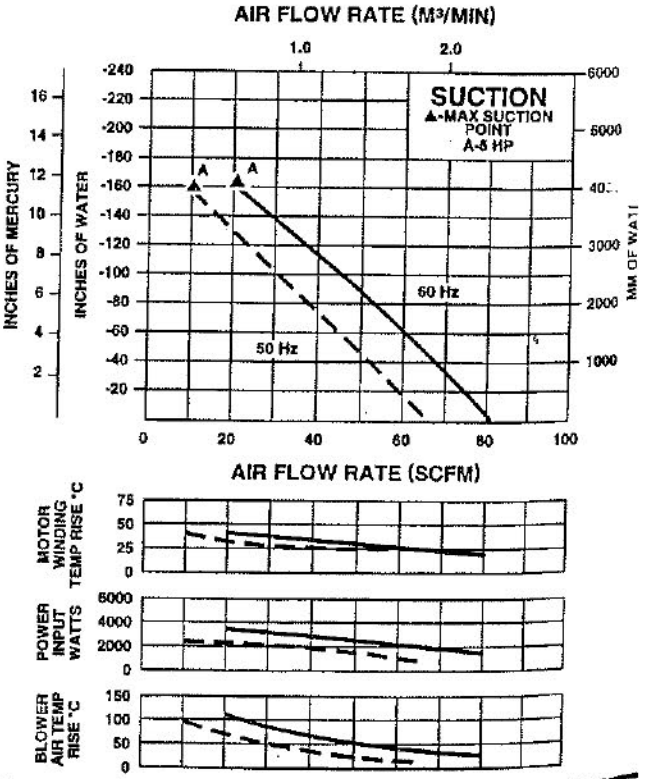

EG&G ROTRON, SAUGERTIES, N.Y. 12477 • 914/246-3401 • FAX 914/246-3802

DR S5
High Pressure Regenerative Blow

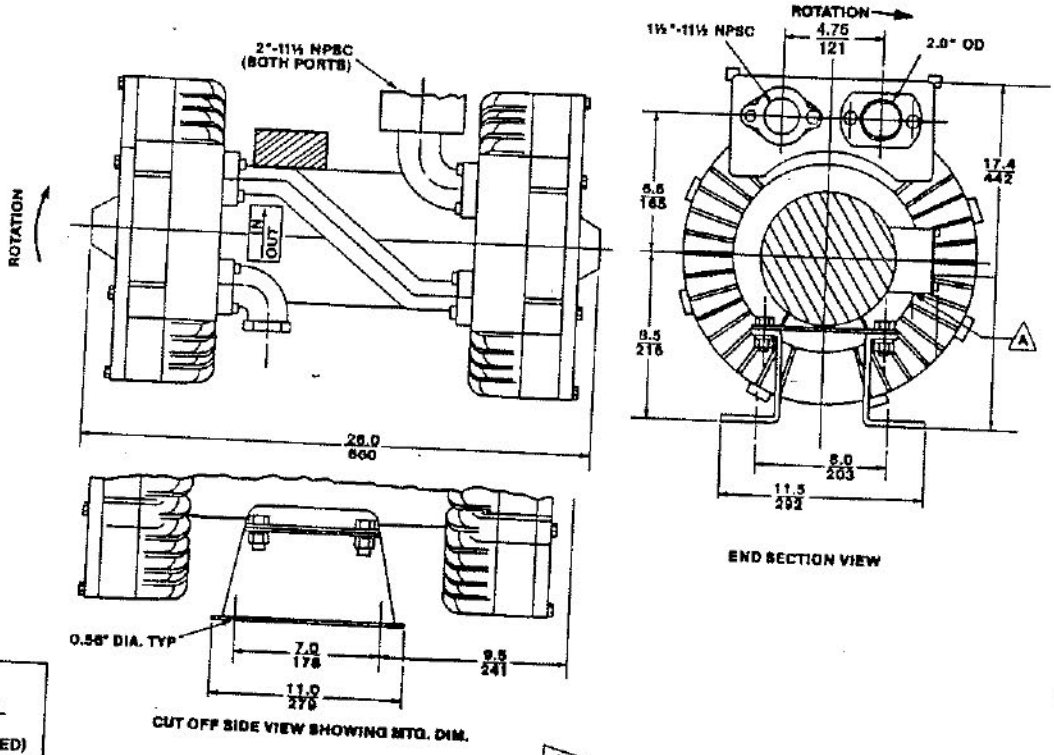

DIMENSIONS: IN / MM
TOLERANCES: .XX ± .08 / 2
(UNLESS OTHERWISE NOTED)

A 1.06 INCH DIAMETER TERMINAL BOX CONNECTOR HOLE

SPECIFICATIONS

MODEL	DRS543E72	DRS543E86
Part No.	037222	037472
Motor Enclosure – Shaft Material	ODP – CS	ODP – CS
Horsepower	5.0	5.0
Voltage [1]	230/460	575
Phase – Frequency [1]	Three - 60 Hz	Three - 60 Hz
Insulation Class [2]	F	F
NEMA Rated Motor Amps	12/6	4.8
Service Factor	1.15	1.15
Locked Rotor Amps	112/56	34
Max. Blower Amps [3]	13.4/6.7	5.4
Recommended NEMA Starter Size	1/0	0
Shipping Weight	252 lb (114 kg)	252 lb (114 kg)

[1] Rotron motors are designed to handle a broad range of world voltages and power supply variations. Our dual voltage 3 phase motors are factory tested and certified to operate on both: **208-230/415-460 VAC-3 ph-60 Hz** and **200-220/400-440 VAC-3 ph-50 Hz**. Our dual voltage 1 phase motors are factory tested and certified to operate on both: **104-115/208-230 VAC-1 ph-60 Hz** and **100-110/200-220 VAC-1 ph-50 Hz**. All voltages above can handle a ±10% voltage fluctuation. Special wound motors can be ordered for voltages outside our certified range.

[2] Maximum operating temperature: Motor winding temperature (winding rise plus ambient) should not exceed 140°C for Class F rated motors or 120°C for Class B rated motors. Blower outlet air temperature should not exceed 140°C (air temperature rise plus inlet temperature). Performance curve maximum pressure and suction points are based on a 40°C inlet and ambient temperature. Consult factory for ambient temperatures above 40°C.

[3] Maximum blower amps corresponds to the performance point at which the motor or blower temperature rise with a 40°C inlet and/or ambient temperature reaches the maximum operating temperature.

Specifications subject to change without notice. Please contact factory for specification updates.

CITATION® LINE SINGLE PHASE STARTERS
Full Voltage
Non-Reversing ❶

..ESET ONLY — 1 COIL EUTECTIC ALLOY OVERLOAD RELAY

Maximum Hp Rating		Magnet Coil Dual Voltage (60 Hz)	NEMA Size	OPEN TYPE		NEMA 1 General Purpose		NEMA 3R Weather Resistant		NEMA 4 Watertight & Dusttight (Stainless Steel)		NEMA 12 Industrial External Reset		NEMA 7CD-9EFG Hazardous Gas-Dust	
Motor V				Catalog Number	Price	Catalog Number	Price	Catalog Number	Price	Catalog Number	Price	Catalog Number	Price	Catalog Number	Price
115 V	230 V														
1	---	120 V	0	B10BN0F	$ 183.	B109G0F	$ 195.	B10BR0FC	$ 267.	B10BW0FC	$ 405.	B10BD0FC	$ 267.	B10BE0F	$ 801.
---	2	240 V													
2	---	120 V	1	CN0F	213.	CG0F	225.	CR0FC	297.	CW0FC	441.	CD0FC	297.	CE0F	837.
---	3	240 V													
2	---	120 V	1P	PN0F	279.	PG0F	291.	PR0FC	363.	PW0FC	507.	PD0FC	363.	PE0F	903.
---	5	240 V													
3	---	120 V	2	DN0FB	387.	DG0FB	447.	DR0FC	579.	DW0FC	879.	DD0EC	579.	DE0FB	1347.
---	7-1/2	240 V													
7-1/2	---	120 V		EN0FB	603.	EG0FB	723.	ER0FC	879.	EW0FC	1335.	ED0FC	879.	EE0FB	1995.
---	15	240 V													

Prices of starters do not include heater coil. Select one heater coil at **$9.00** per coil. Heater coil selection, **Page Y-66.**

❶ If branch circuit protective device is 45 amperes or greater. C320FBR1 fuse kit(s) may be required for control circuit protection per NEC 430-72.

STARTERS WITH BIMETAL OVERLOAD RELAYS

For B10 Series starter with Bimetal Overload Relay (manual reset convertible to automatic reset), substitute B11 for B10 in above listed catalog number. Ratings and price are the same. EXAMPLE: B11BN0F instead of B10BN0F.

STARTERS FOR OTHER VOLTS AND HERTZ ..PLICATIONS

..tarters listed above can also be used for 50 Hz applications at following voltages:

For 110 V 50 Hz use 120 V 60 Hz

For 220 V 50 Hz use 240 V 60 Hz

STARTERS FOR 24 V 60 Hz and 208 V 60 Hz APPLICATIONS

For starters with 24 volt or 208 volt 60 hertz magnet coils, select starter from listing above and change the 7th digit of the catalog number as follows:

For 24 V, 60 Hz — Change F to T.
Example: B10BN0T

For 208 V, 60 Hz — Change F to E.
Example: B10CD0EB

Transformer Selection For Pilot Light

Rating	Code Letter
120 V 60 Hz	A
240 V 60 Hz	B

Example — Pilot light for use on 240 V Cat. No. C400KG4B.

For factory installed cover control, see ... Y-44.

COVER CONTROL KITS

For field installation. Pushbutton Kit includes all wiring and mounting hardware. The operators mount to enclosure cover without drilling or knockouts and the switch unit mounts on starter insuring easy cover removal. Start buttons are green, Stop and Off are red, Auto and Hand are white, and all light lenses are white.

Cat. No. C400KG1
Start-Stop Pushbutton
(Momentary Buttons)

Cat. No. C400KG3
Hand-Off-Auto
Selector Switch
(Maintained Buttons)

Cat. No. C400KG4
Pilot Light Only

Cat. No. C400KG5
Start-Stop Pushbutton
with Pilot Light

Cover Control Description	NEMA 1 Enclosures Sizes 0-3 Cat. No.	NEMA 3R, 4❹ & 12 Enclosures Sizes 0-3 Cat. No.	Kit Price	NEMA 7-9 Enclosures Sizes 0-3 Cat. No.	NEMA 7-9 Enclosures Kit Price
Start-Stop Pushbutton	C400KG1	C400LG1	$ 42.	C400KE1	$ 90.
Hand-Auto Selector Switch	KG2	LG2	45.	---	---
Test-Auto❷ Selector Switch	KG21	---	60.	---	---
Hand-Off-Auto Selector Switch	KG3	LG3	45.	KE3	90.
Test-Off-Auto❷ Selector Switch	KG31	LG31	45.	---	---
Pilot Light❸	KG4	LG4	90.	KE4	102.
Start-Stop PB and Pilot Light❸	KG5	LG5	138.	KE5	192.
Pilot Light for Cover (Drilling Required)❸	KG41	---	90.	---	---

❷ "Test" position momentary.
❸ Add suffix letter to catalog number for pilot light transformer voltage. See table at left.
❹ NEMA 4 C400LG Kits require E30KT3 boot. Order from Page M-44.

WITH CONTROL TRANSFORMER — RESET ONLY — 3 COIL EUTECTIC ALLOY OL RELAY

❶ Maximum Horsepower Rating — Motor Volt. — Primary 200 V	230 V	460 V	575 V	Secondary Voltage-Magnet Coil Voltage	NEMA Size	NEMA 1 General Purpose — Catalog Number	Price	NEMA 3R Rainproof — Catalog Number	Price	NEMA 4 Watertight & Dusttight (Stainless Steel) — Catalog Number	Price	NEMA 12 Ind. Ext. Reset (NEMA 3 & 3R) ❷ — Catalog Number	Price
3	---	---	---	120 V	0	A108GAOE BGAOG BGAOD	$ 378.	A108RAOEC BRAOGC BRAODC	$ 450.	A108WAOEC BWAOGC BWAODC	$ 568.	A108DAOEC BDAOGC BDAODC	$ 450.
---	3	5	---										
---	---	---	5										
7-1/2	---	---	---	120 V	1	A10CGAOE CGAOG CGAOD	408.	A10CRAOEC CRAOGC CRAODC	480.	A10CWAOEC CWAOGC CWAODC	654.	A10CDAOEC CDAOGC CDAODC	480.
---	7-1/2	10	---										
---	---	---	10										
10	---	---	---	120 V	2	A10DGAOEB DGAOGB DGAODB	714.	A10DRAOEC DRAOGC DRAODC	846.	A10DWAOEC DWAOGC DWAODC	1146.	A10DDAOEC DDAOGC DDAODC	846.
---	15	25	---										
---	---	---	25										
25	---	---	---	120 V	3	A10EGAOEB EGAOGB EGAODB	1146.	A10ERAOEC ERAOGC ERAODC	1302.	A10EWAOEC EWAOGC EWAODC	1758.	A10EDAOEC EDAOGC EDAODC	1302.
---	30	50	---										
---	---	---	50										
40	---	---	---	120 V	4	A10FGAOE FGAOG FGAOD	2238.	(See SPECIAL SERVICE ENCLOSURES Page 212)		A10FWAOE FWAOG FWAOD	3282.	A10EDAOE FDAOG FDAOD	2754.
---	50	100	---										
---	---	---	100										
75	---	---	---	120 V	5	A10GGAOE GGAOG GGAOD	4905.			A10GWAOE GWAOG GWAOD	6225.	A10GDAOE GDAOG GDAOD	6225.
---	---	---	---	---	6-8	(See SPECIAL MODIFICATIONS, Page Y-39 - Y-40)							

Prices of starters do not include heater coils. Select 3 coils at $9.00 per coil. Heater coil selection, **Page Y-66.**

❶ If branch circuit protective device is 45 amperes or greater, C320FBR1 fuse kit(s) may be required for control circuit protection per NEC 430-72.
❷ Suitable for outdoor application when properly installed — See **Page ii-12** for details.
❸ Horsepower of starters for 380 V 50 Hz application.

NEMA Size	00	0	1	2	3	4	5	6	7	8
Horsepower	1½	5	10	25	50	75	150	300	600	900

STARTERS WITH BIMETAL OVERLOAD RELAYS

For starter with Bimetal O.L. Relay (convertible manual to automatic reset), or Slow Trip Eutectic Alloy O.L. Relay, substitute A11 or A13 respectively for Cat. No. A10. Same ratings and prices. EXAMPLE: A118GAOE instead of A108GAOE.

COVER CONTROL FACTORY INSTALLED ON ENCLOSED STARTERS

To obtain other than Reset Only in cover of enclosed starters, substitute Code Number from table below for the numeral "0" in the second or third from last position in the listed catalog number. Make necessary price addition. EXAMPLES: NEMA 1 Enclosed Starters, Size 0 with Start-Stop pushbuttons in cover — change A108GAOE to A10BGA1E. Size 2 with Start-Stop pushbuttons in cover — change A10DGAOEB to A10DGA1EB.

Description	Code Number	Starter Size	Price Addition for Factory Installation — Enclosure Type NEMA 1	NEMA 3R, 4, 7-9 & 12
Start-Stop Pushbutton	1	00 thru 5	$ 60.	$ 132.
Hand-Auto Selector Switch	2			
Test❹-Auto Selector Switch ❺	21	6 thru 8	132.	132.
Hand-Off-Auto Selector Switch	3			
Test❹-Off-Auto Selector Switch ❺	31			
Pilot Light Only	4	00 thru 8	102.	162.
Start-Stop Pushbutton and Pilot Light	5	00 thru 5	162.	294.
		6 thru 8	222.	294.
Hand-Auto Selector Switch and Pilot Light ❺	6	0 thru 5	162.	294.
Test❹-Auto Selector Switch and Pilot Light ❺	61			
Hand-Off-Auto Selector Switch and Pilot Light ❺	7	6 thru 8	222.	294.
Test❹-Off-Auto Selector Switch and Pilot Light ❺	71			

❹ "Test" position is momentary.
❺ Not applicable to NEMA 7CD-9EFG enclosed devices.

FOR OTHER VOLTS AND HERTZ APPLICATIONS —

(Dc Coils — For size 00, see Page **A-83** — all others, see **Page Y-63.**)

Starters listed in this section also have a 50 Hertz rating as shown in table below. For other than listed Volts and Hertz, select required starter by catalog number and replace the magnet coil alpha designation in the catalog number with the proper code suffix from the table below.

In all cases the magnet coil alpha designation will be either the 2nd from last or the last digit of the listed catalog number. Examples:

Size 0 — Change A10BNOA to A10BNOF

Size 2 — Change A10DNOAB to A10DNOFB

Coil Volts and Hertz ❸	Code Suffix
❻ 120/60 or 110/50	A
❻ 240/60 or 220/50	B
❻ 480/60 or 440/50	C
❻ 600/60 or 550/50	D
208/60	E
120/240/60 or 110/220/50	❺ ❼ F
240/480/60 or 220/440/50	❺ ❼ G
❻ 380/50	L
24/60	T

❸ For control voltages 120 V and lower, devices are wired for **separate control.** For control voltages 208 V and above, devices are wired for **common control.**
❻ For dual voltage coils (Size 0 thru 5 only), suffixes F and G, add **$12.** to price of controller.
❼ Sizes 7-8 starters have single frequency coils. Use only 60 Hz voltage for code suffix listed.
❼ Suffixes do not apply to Sizes 00, 6, 7 and 8.

Model 95T/8220 Turbidimeter System

TURBIDITY

Data Sheet 95T/395
Supersedes 95T/894

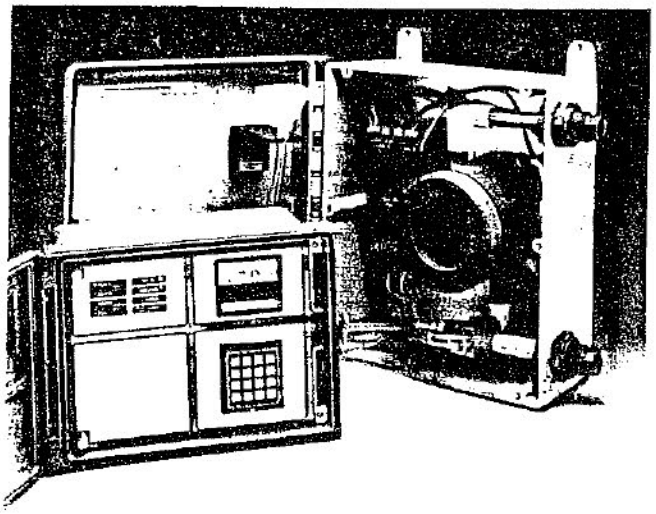

Models 95T Analyzer and 8220 Sensor

Designed to meet the International Standard For Measurement of Turbidity [ISO 7027-1984 (E)]

Hazardous Area Certification

Certification by CSA as safe for:

Class I, Div. 2, Groups A, B, C and D

Class II, Div. 2, Groups E, F, and G

■ **Patented Four-Beam Measurement Method.**
This microprocessor-based system uses a technologically advanced measuring concept to provide:
- practical lifetime calibration*
- exceptional accuracy
- unparalleled measurement stability
- color compensation

■ **Virtually Maintenance Free.**
The only required maintenance is an occasional, simple cleaning of the sensor flow chamber. (This requirement is automatically displayed to alert the operator — see next item.)

■ **System Diagnostics Identify Problems.**
Built-in diagnostic messages and system status indicators alert the operator to deteriorating conditions that may restrict performance, and system malfunctions requiring immediate attention.

■ **Long-lasting LED Light Sources.**
The pulsed LEDs produce light of a single wavelength, providing highly accurate, reliable performance. Furthermore, the LEDs last 10-12 years, virtually eliminating light source replacement.

*Only periodic verification of calibration using optional patented turbid glass cube assembly is required.

■ **Easy Setup and Operation.**
Dedicated function keys and an informative display make system setup, operation and verification of calibration simple and fast.

■ **Unique Turbid Glass Calibration Verification.**
An optional turbid glass cube assembly provides a factory-certified, 100% reproducible value for quick, easy verification of calibration. Light, heat or aging will not change this extremely stable secondary standard. (A built-in funnel assembly facilitates calibration with a traditional liquid turbidity standard such as Formazin.)

■ **Integral Bubble Trap.**
A built-in bubble trap in the sensor flow chamber eliminates air in the sample which can affect measurement accuracy.

■ **NEMA 4X Protection.**
NEMA 4X enclosures protect system components from wet environments, providing years of highly reliable operation.

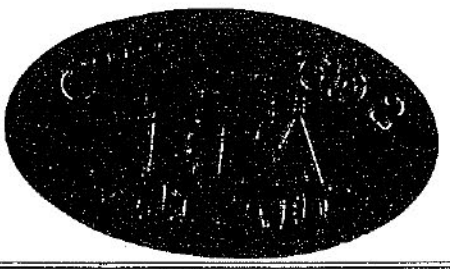

SCHOTT GREAT LAKES INSTRUMENTS

Strip Chart Recorders

OTHER PRODUCTS

Data Sheet 280/1193
Supersedes 280/1190

Introduction

A variety of strip chart recorders are available for use with GLI instruments that measure pH/ORP, conductivity, dissolved oxygen, flow, level and turbidity. These recorders accept a 0-1 mA or 4-20 mA signal which is the output typically provided on GLI analyzers. All recorders are available with a choice of scales. Power requirements are 115 volts, 60 Hz or 230 volts, 50 Hz. A roll of chart paper is provided with each recorder.

■ Model 280

This 2-1/4 inch strip chart recorder is supplied in a free standing, die-cast case with a bezel for mounting in a 5-11/16" high x 3-11/16" wide panel cutout.

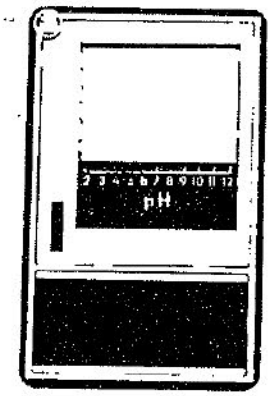

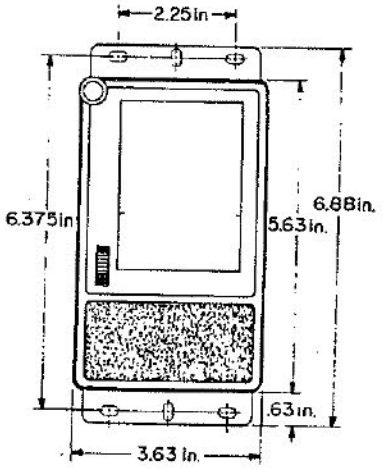

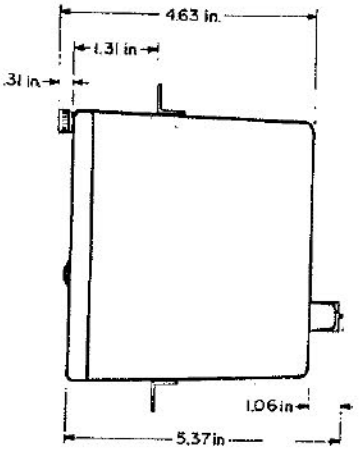

■ Model 282

This recorder is identical to Model 280 except that it is supplied in a NEMA 4X, surface mount, fiberglass enclosure for environmental protection.

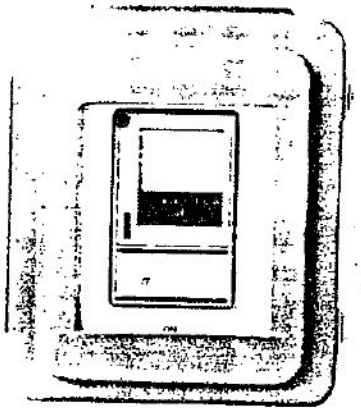

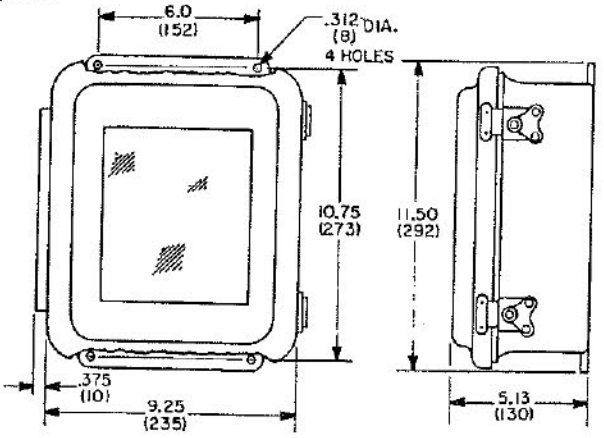

■ Model 450 (dual-trace)

This recorder is identical to Model 282 except that it provides a dual trace. The recorder accepts two input signals and has a trace mode selector switch to record Trace A, Trace B or Trace A plus Trace B. Trace A is a solid line; trace B is a dotted line.

GREAT LAKES INSTRUMENTS

Specifications*

Model 8220 Sensor

Operational:

- Flow Rate ..... 0.05 to 7 GPM (0.19 to 26.5 LPM)
- Ambient Conditions ..... 32-140°F (0-60°C)
- Sample Temp. Range .. 32-140°F (0-60°C)
- Pressure Range ..... Std. Design:0-50 psig at 68°F (0-3.4 bar at 20°C)
  High Press. Design: 0-150 psig at 68°F (0-10.2 bar at 20°C)
- Pressure Drop ..... Std. Design: 0.0017 psi at 0.1 GPM (0.0001 bar at 0.36 LPM)
  High Press. Design: 0.165 psi at 1.0 GPM (0.012 bar at 3.8 LPM)
- Residence Time ..... 9.5 seconds at 1 GPM (3.8 LPM)
- Air Venting..... Integral bubble trap for 0.05 to 0.5 GPM (0.19 to 1.8 LPM) flows. External deaerator recommended for flows above 0.5 GPM (1.8 LPM) with air in sample.

Mechanical:

- Configuration .....Flow through design
- Process Connections....1/2 in. NPT female standard; adaptable to 3/8 in. or 1/4 in. NPT, barb or tube fittings
- Wetted Materials.....PVC, polycarbonate, polystyrene, PPO, nitrile and Buna-N
- Cleaning Method .....Water rinse, wipe surfaces
- Enclosure.....NEMA 4X (CSA type 4), PPO structural foam (V-0 flammability rating per U.L. 94 test method) w/four integral mounting tabs; 17.5 in. H x 13.8 in. W x 7.6 in. D (445 mm H x 351 mm W x 193 mm D)
- Mounting Configurations.....Surface or pipe mount
- Net Weight.....18 lbs. (8.2 kg) approx.

Model 95T Analyzer

Operational:

- Displays..... Upper: 4 digit numeric LCD, 0.7 in. (18 mm) high
  Lower: 8 character alphanumeric dot matrix, 0.3 in. (7.6 mm) high
- Measuring Range..... 0.000 to 1.000, 0.00 to 10.00 and 0.0 to 100.0 NTU with auto-ranging
- Ambient Conditions ..... -4 to 140°F (-20 to 60°C)
- Relay Function:
  - Setpoints..... Adj. from 0-100% of measuring range
  - Deadbands ..... Adj. from 1-10% of measuring range
  - Indicators ..... LED lights when respective relay transfers
  - Outputs ..... Two solid-state A.C. relays; one switched signal for each relay, 3A continuous rating, SPST

    NOTE – User must provide 24-240 VAC and 0.02 amps RMS minimum.

  NOTE - Relays transfer in response to increasing or decreasing reading, switch selectable. Relay B can be programmed as a system diagnostic alarm so that it also transfers if a system failure occurs.

- Sensor-to-Analyzer Distance ..... 300 feet (91 m) maximum
- Power Requirements.... 98-132 VAC, 50 or 60 Hz-switch selectable, 15VA typical, optional 195-265 VAC
- Analog Outputs▲ (isolated) ..... 0-1 mA, 100 ohms max. load; 0-5 VDC, 5000 ohms min. load; 4-20 mA, 600 ohms max. load

  ▲ Each output is isolated from the input, ground and line power, but not from each other.

  Range Expand – The analog outputs can be made to represent a 10-100% segment of any of the three measuring ranges.
- Digital Outputs..... Two LSTTL-compatible signals, one each for warning and failure diagnostic conditions.
- Hazardous Area Certification (Optional):
  - Division 2 ..... CSA: Class I, Groups A, B, C and D
    Class II, Groups E, F and G

Performance (Electrical, Analog Outputs):

- Sensitivity ..... 0.001 NTU
- Stability..... 0.1% of span per 24 hrs, non-cumulative
- Non-linearity ..... 0.1% of span or better
- Repeatibility..... 0.1% of span or better
- Temperature Drift ..... Zero and Span: 0.01% of span per °C
- Response Time ..... 1, 6, 30, 60 or 90 seconds to 90% of value upon step change, switch selectable
- System Accuracy..... ±2% of reading, all ranges

Mechanical:

- Enclosure ..... NEMA 4X (CSA type 3), styrene structural foam (w/flame retardant additive) with two stainless steel mounting brackets, 12.5 in. W x 9.7 in. H x 6.6 in. D (318 mm H x 246 mm W x 168 mm D)
- Mounting Configurations ..... Surface, panel or pipe mount
- Net Weight..... 12 lbs. (5.5 kg) approx.

* Subject to change without notice.

Ordering Information

MODEL NUMBER
95T: Microprocessor-based turbidity analyzer in NEMA 4X (CSA type 3) enclosure with two stainless steel mounting brackets for panel, surface or pipe mounting.

LINE VOLTAGE
- **1** 115 volts, 60 Hz. (single-fused)
- **2** 230 volts, 50 Hz. (dual-fused)
- **3** 115 volts, 50 Hz. (single-fused)
- **4** 230 volts, 60 Hz. (dual-fused)
- **5** 230 volts, 50 Hz. (single-fused)

RESERVED CATEGORIES

RELAYS (Note 1)
- **B1** Two relays
- **R1** Two relays plus RS-232 output

- **N** Standard Instrument
- **B** Backlit Display (Note 2)
- **K** Special Instrument

AGENCY CERTIFICATION
- **Blank** No Approval
- **CSA** CSA Certified

95T A0 – [ ] **Product Number**

Choose one from each category.

MODEL NUMBER
8220T: Turbidity sensor for use with Model 95T to continuously monitor from 0.001 to 100.0 NTU. Sensor, in NEMA 4X (CSA type 4) surface mount enclosure, includes 20 ft. (6 m) long, 8-cond. plus shield cable.

LINE FREQUENCY
- **1** For use with 60 Hz line power
- **2** For use with 50 Hz line power

RESERVED CATEGORY

OPERATING PRESSURE RANGE
- **0** Standard (0-50 psig at 68°F)
- **1** High Pressure (0-150 psig at 68°F)

INSTALLATION CONNECTIONS
- **C3** PVC, 1/2 in. NPT female

- **N** Standard Sensor
- **K** Special Sensor

AGENCY CERTIFICATION
- **Blank** No Approval
- **CSA** CSA Certified

8220T A C3 – [ ] **Product Number**

Choose one from each category.

NOTES: 1. Relays are solid-state AC switching (24-280 VAC) type.
2. When display backlighting is ordered, the minimum specified line voltage power requirement increases from 98 to 100 VAC and 195 to 200 VAC. Also, the 95T with a backlit display cannot be CSA certified.

Accessories (ordered separately):

- **8220-1300 Calibration Cube Assembly**
  Each assembly is labeled to include a factory-certified calibration value.
- **8220-1040 Pipe Mounting Kit**
  Includes hardware required to horizontal or vertical pipe mount the Model 8220 sensor.
- **99X1W1101 Interconnect Cable**
  This 8-conductor plus shield cable increases the separation distance normally provided by the 20 ft.(6 m) long cable included with the sensor. Specify cable length in feet (rounded up to next whole foot).

Engineering Specification

1. The microprocessor-based system shall consist of a Model 95T analyzer and a Model 8220 sensor, and shall employ a four-beam ratiometric measuring method to continuously monitor turbidity.
2. The system shall meet the International Standard For Measurement Of Turbidity [ISO 7027-1984(E)] and shall have an auto-ranging feature from 0.001 NTU to 100.0 NTU with automatic decimal point positioning.
3. The sensor shall have a built-in bubble trap to eliminate air in the sample.
4. The analyzer shall have two displays: the upper shall be a 4-digit numeric LCD with 0.7 inch (18 mm) high digits and the lower shall be an 8 character alphanumeric dot matrix with 0.3 inch (7.6 mm) high characters.
5. The system shall have self-diagnostic capability, including preprogrammed diagnostic messages to identify specific causes of deteriorating conditions or malfunctions.
6. Isolated instrument outputs shall include 0-5 VDC, 0-1 mA and 4-20 mA. The system shall have an output hold function to maintain the latest output during calibration or while configuring the instrument.
7. The analyzer shall have two solid-state relays for on/off control or alarm functions. They shall be selectable to operate in response to increasing or decreasing measured value and have individual setpoint and deadband settings.
8. The system shall have automatic color compensation and continuous zero point check.
9. The analyzer shall be provided in a NEMA 4X enclosure with two stainless steel mounting brackets. The sensor shall be provided in a NEMA 4X surface mount enclosure, with a 20 ft. (6 m), 8-conductor plus shield cable.
10. The system shall be Great Lakes Instruments, Inc. Model 95T/8220.

Optional:

11. The system shall (not be agency certified) (be CSA approved for use in Div. 2, Class I, Groups A, B, C and D and Class II, Groups E, F and G).
12. The system shall include a turbid glass calibration cube assembly with a factory-certified calibration value for periodic verification of calibration.

Dimensions

Model 95T Analyzer

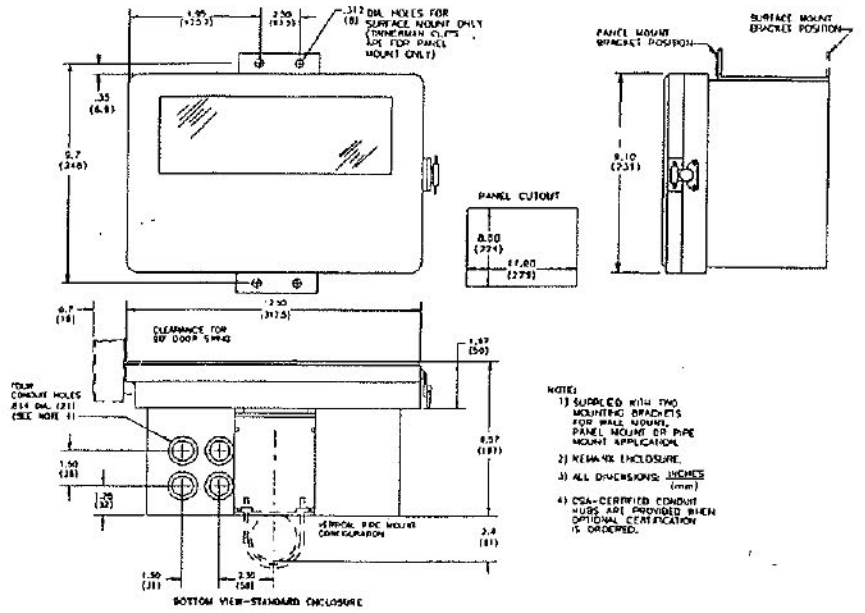

Mounting Configurations

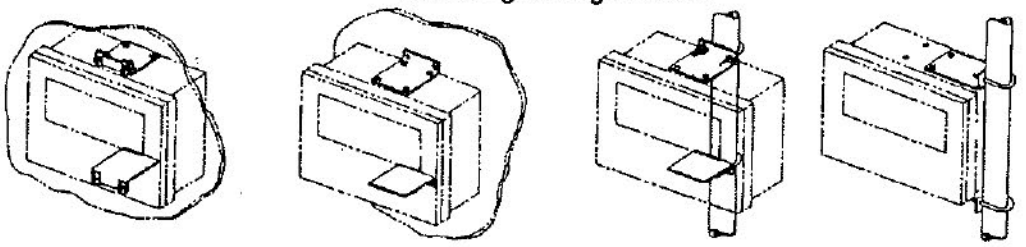

Panel-Mount (linnerman nuts included)

Surface-Mount

Pipe-Mount (U-bolts not included)

Model 8220 Sensor

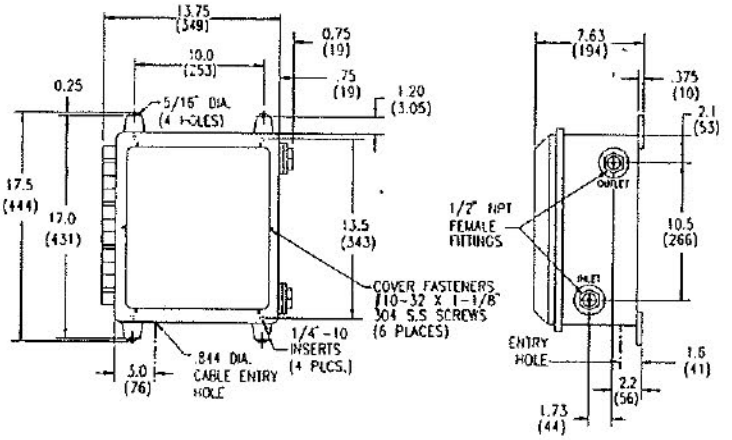

Represented By:

Great Lakes Instruments, Inc.
9020 West Dean Road
Milwaukee, WI 53224

Telephone (414) 355-3601
Telefax (414) 355-8346

GREAT LAKES INSTRUMENTS

A Schott Group Company

Data Sheet 95T/ Printed in U.S.A.

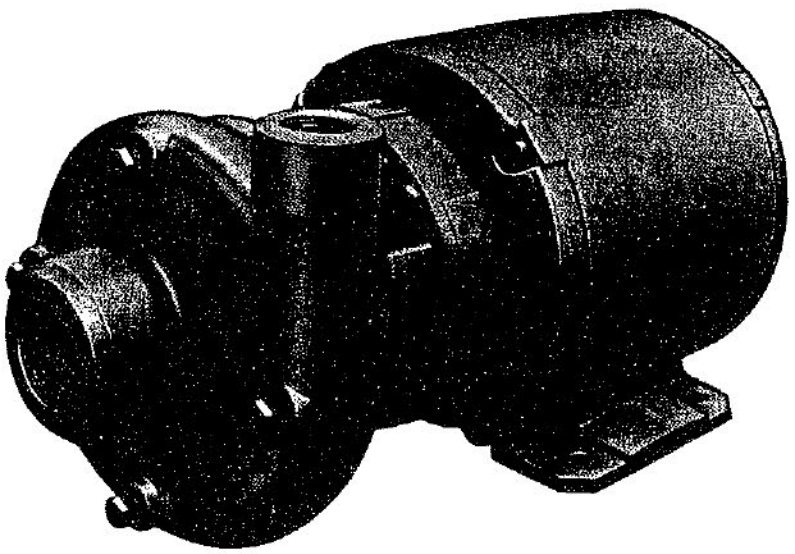

G&L

Close-Coupled Centrifugal Pumps

MODEL

3656

S-Group

FEATURES

CLOSE COUPLED DESIGN
Compact design saves space and simplifies maintenance.

BACK PULL-OUT
Reduces maintenance down-time.

MECHANICAL SEAL
Standard John Crane Type 21 interchangeable on Models 3657 & SST-C and Frame mounted Models.

MATERIALS OF CONSTRUCTION
Available in All Iron, Bronze Fitted or All Bronze material for maximum application flexibility.

REPLACEABLE WEARING COMPONENTS
- AISI TYPE 303 Stainless Steel shaft sleeve.
- Iron or Bronze casing wear ring.

DESIGNED FOR MAXIMUM EFFICIENCY
Enclosed impeller design, dynamic balancing and renewable wear rings reduce losses affecting performance and pump life.

MOTOR ADAPTER
Rigid cast iron motor adapter provides support and registered fits maintain positive unit alignment.

SUCTION & DISCHARGE PIPE CONNECTIONS
Threaded NPT connections EXCEPT 3 x 4-7 Model only with 125 Lb. ANSI flat faced flanges.

MOTORS
Standard NEMA Frame, JM shaft extension, C-Face mounting.
1- or 3-Phase, 3500 or 1750 RPM.
Open Drip-proof and Totally Enclosed Fan Cooled. Interchangeable on Model 3657 and SST-C Units.

SPECIFICATIONS

CAPACITIES TO...
550 GPM (125 m³/hr) at 3500 RPM
200 GPM (45 m³/hr) at 1750 RPM

HEADS TO...
280 ft. TDH (85m) at 3500 RPM
67 ft. TDH (20m) at 1750 RPM

WORKING PRESSURE...
175 PSIG (12 bars)

MAXIMUM SUCTION PRESSURE TO...
100 PSIG (7 bars)

MAXIMUM TEMPERATURES TO...
212°F (100°C) with standard seal
OR
250°F (121°C) with optional high temperature seal for water applications.

DIRECTION OF ROTATION...
Clockwise when viewed from motor end.

MOTORS...
NEMA Frame, JM shaft extension, C-Face.
Open Drip-proof or Totally Enclosed Fan Cooled, High Efficiency 60 Hz., with 1.15 Service Factor.

1-Phase, 115/230 volt
3500 RPM 3 to 10 HP
1750 RPM to 3 HP

3-Phase, 208-230/460 volt through 215JM Frames

230/460 volt 250JM and Larger Frames

3500 RPM 3-20 HP
1750 RPM to 3 HP

Optional Explosion Proof or Premium High Efficiency motors available in 3-Phase only.

MECHANICAL SEALS...
Standard ceramic/carbon faces, 316 S/S metal components and Buna-N elastomers. Optional High Temperature and severe duty seal materials are available.

APPLICATIONS

Specifically designed for:
- Water circulation
- Booster service
- Liquid transfer
- Spraying systems
- Irrigation
- General purpose pumping

125 Lb. Flanged Connections 3 x 4 – 7 Model Only

© 1988 G&L

GL

Effective March, 1993
BGL3656S

G&L
A GOULDS PUMPS COMPANY

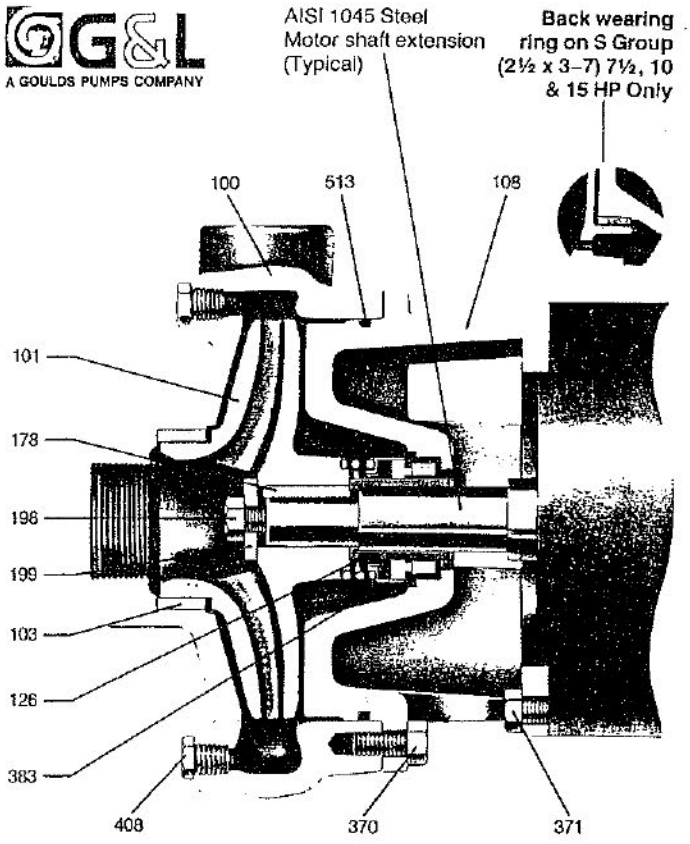

MATERIALS OF CONSTRUCTION

Item No.	Part Name	Material: All Iron	Material: Bronze Fitted	Material: All Bronze
100	Casing	1001	1001	1102
101	Impeller		1102	
103	Casing Wear Ring		1102	
108	Adapter		1001	1001
184	Seal Housing①	1-pc. w/adapter		1102
126	Shaft Sleeve	AISI TYPE 300 SERIES Stainless Steel		
178	Impeller Key			
198	Impeller Bolt			
199	Impeller Washer			
370	Hex HD Cap Screw Adapter to Case	SAE 1200 Series Steel Grade 5		
371	Hex HD Cap Screw Adapter to Motor			

383 Mechanical Seal	Part No.	Service	Rotary	Stationary	Elastomers	Metal Parts
STD.	10K13	General	Carbon	Ceramic	Buna	TYPE 316 S.S.
OPT.	10K19	Hi-Temp		Ni-Resist	EPR	
OPT.	10K25	Chem. Duty		Ceramic	Viton	

408	Pipe Plug ¼"	Steel	Brass
513	O-Ring	Buna-N	

Materials of Construction	Material Code	Engineering Standard
	1001	Cast Iron ASTM A48 CL20
	1102	Bronze ASTM B584

①For separate seal housing and adapter construction, All bronze material only, see repair parts page.

Note: Pumps will be shipped with top-vertical discharge position as standard. For other orientations, remove casing bolts—rotate discharge to desired position—replace and tighten bolts to 25 ft. lbs. Note that discharge may extend below motor mounting surface in bottom-horizontal position; adequate clearance must be provided.

PUMP DIMENSIONS AND WEIGHTS

Pump	NPT THRD. Suct.	NPT THRD. Disch.	W	X	Y	Z	K	Wt. (lbs.)
1½ x 2-6	2	1½	4¼	4½	2⅝	3½	1¼	30
2½ x 3-7	3	2½		6		4	1 13/16	45
1½ x 2-8	2	1½		5		4¼	1¼	50
3 x 4-7	4	3	4⅜	6	2½	5	3¾	78

Note: 3 x 4-7 only has 125 lb. ANSI flat-faced flanged connections.

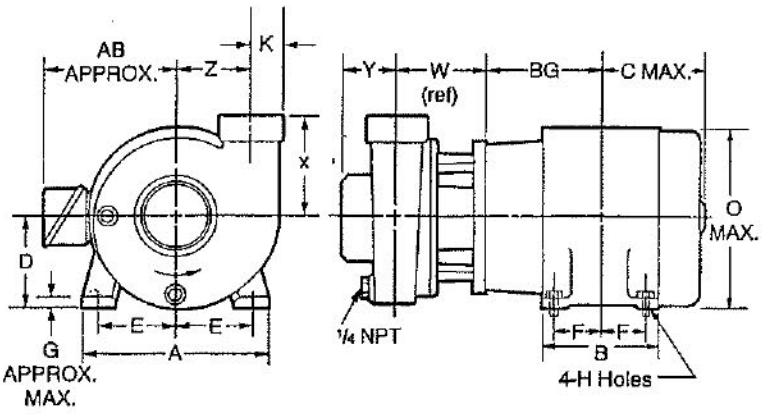

MOTOR FRAMES/HORSEPOWER

Motor Frame	MOTOR HORSEPOWER 3500 RPM 1ϕ ODP	3500 RPM 1ϕ TEFC	3500 RPM 3ϕ ODP	3500 RPM 3ϕ TEFC	1750 RPM 1ϕ ODP	1750 RPM 1ϕ TEFC	1750 RPM 3ϕ ODP	1750 RPM 3ϕ TEFC
143	—	—	—	—	—	1	—	1
145	3	—	3	—	1½	1½	2	2
182	3	—	5	3	2	2	3	3
184	5	3	7½	5	3	3	—	—
213	7½	5	10	7½	—	—	—	—
215	10	—	15	10/15	—	—	—	—
†254TCZ	—	—	20	—	—	—	—	—
†256TCZ	—	—	25	20	—	—	—	—

250 TCZ frames with 210 series JM shaft extension.

MOTOR DIMENSIONS AND WEIGHTS

Frame JM	A*	B*	BG	C* Max	D	E	F	G*	H	O* Max	AB*	Wt. Max. (lbs).
143	6½	6	4 7/8	6	3½	2¾	2	¼	11/32	7¼	5⅞	44
145			5⅜	6⅛			2½					57
182	8⅞	6⅜	5⅞	6¾	4½	3¾	2¼	½	13/32	9¼	8⅛	75
184		7⅜	6⅜	7¼			2¾					92
213	10⅛	7⅝	7¼	8	5¼	4¼	2¾	⅝		11¼	9 11/16	144
215		9⅛	8	8¾			3½					170
254TCZ	12⅜	11½	9⅛	10	6¼	5	4⅛		17/32	13 5/32	10 11/16	253
256TCZ			10	11			5					305

*Dimensions may vary with manufacturers
(All dimensions in inches and weights in lbs. Do not use for construction purposes.)

Goulds

Close-Coupled Centrifugal Pumps

MODEL

3642

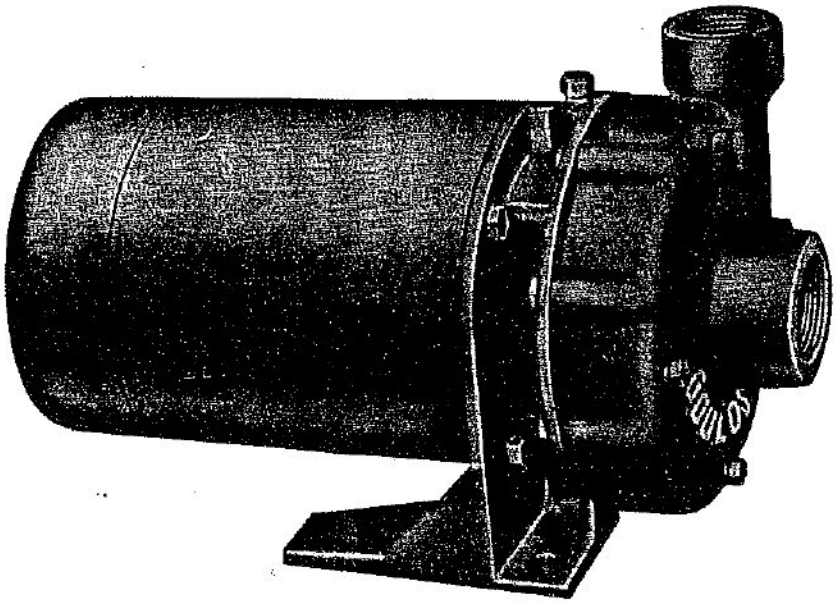

APPLICATIONS

Specifically designed for the following uses:

- Water circulation
- Booster service
- Liquid transfer
- Spraying systems
- Jockey pump service
- General purpose pumping

SPECIFICATIONS

Pump:

- Capacities: to 110 GPM
- Heads to: 118 feet
- Pipe connections:

MODEL	SUCTION	DISCHARGE
1 x 1¼ - 5	1¼" NPT	1" NPT
1¼ x 1½ - 5	1½" NPT	1¼" NPT

- Maximum working pressure: 125 PSI
- Temperature: standard seal — 212°F, (100°C) maximum.
- Rotation: right hand i.e.; clockwise when viewed from motor end.

Motor:

- NEMA standard
- Open drip proof, TEFC, or (explosion proof three phase only) enclosures.
- 60 Hz, 3500 RPM
- Stainless steel shaft
- Single Phase: ½-2 HP TEFC. Built-in overload with automatic reset.
- Three Phase:
  ⅓-2 HP: ODP, 208-230/460V
  ½-2 HP: TEFC, 208-230/460V
  ½-2 HP: expl. proof, 230/460V
- Overload protection must be provided in starter unit. Starter and heaters (3) must be ordered separately.

FEATURES

Compact Design: Close coupled space saving design provides eas installation. Flexible couplings and bedplates not required.

Mounting: Can be mounted in vertical or horizontal position.

Construction: Available in bronze fitted (BF), all iron (AI), or all bronze (AB). Bronze fitted means bronze impeller.

Impeller: Enclosed design for high efficiencies. Threaded directly on motor shaft. Stainless steel locknut on three phase models requires no clearance adjustments. Balanced for smooth operation.

Casing: Volute type, cast iron or bronze construction. Back pullout design. Discharge can be rotated in eight positions. Vertical discharge standard. Tapped openings provided for priming, venting and draining.

Mechanical Seal: Standard carbon/ceramic faces, BUNA elastomers, 300 series stainless steel components. Option seals available.

Motor: Close-coupled design. Ball bearings carry all radial/axial thrust loads. Designed for continuous operation. All ratings are within working limits of the motor.

© 1992 Goulds Pumps, Inc.

W, G,

Effective June, 1992
B3642

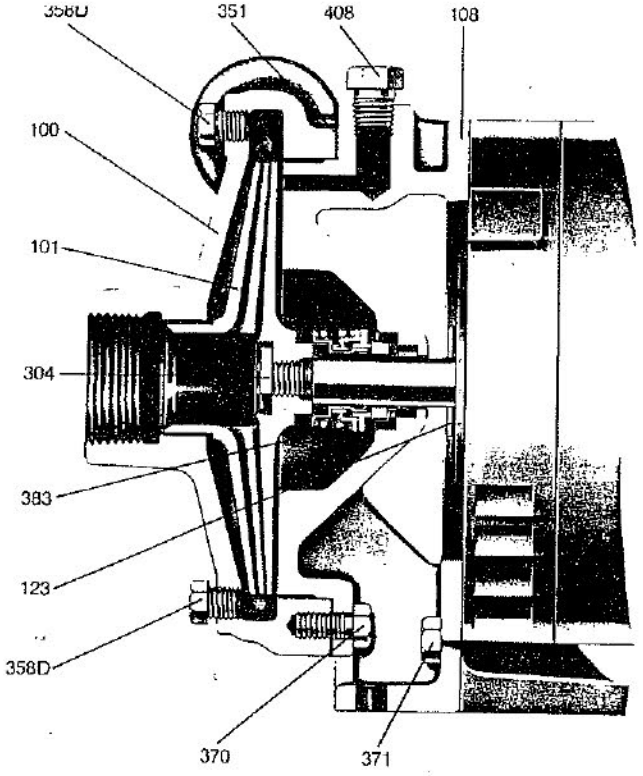

Goulds

Close-Coupled Centrifugal Pumps

MODEL

3642

PARTS

Item No.	Part Name	Material Code: Bronze Fitted	All Iron	All Bronze
00	Casing	1001	1001	1102
101	Impeller	1102	1001	1102
108	Adapter	1001	1001	1102
123	Water Deflector	Rubber or Micarta*		
304	Impeller Nut*	Stainless Steel		
351	Gasket-Casing	Composite		
358DE	Pipe Plug ¼" Vent and Drain	Steel	Steel	Steel
370	H. HD Cap Screw Adapter to Case		Steel	
371	H. HD Cap Screw Adapter to Motor		Steel	
383	Mechanical Seal			

Order Suffix	10K10	Std.	Service	Rotary	Stationary	Elastomers	Metal Parts
			General		Ceramic	BUNA	300 SERIES S.S.
N	10K6		Heavy Duty		Ni-Resist		
O	10K18	Opt.	Hi Temp.	Carbon		EPR	
V	10K24		Chem. Duty		Ceramic	Viton	
408	Pipe Plug-Priming ¼" NPT				Steel		Brass

*Impeller nut furnished on 3 phase units only.

MATERIALS OF CONSTRUCTION

Material Code	Engineering Standard
1001	Cast Iron ASTM A48 CL 20
1102	Bronze ASTM B584

MOTOR FRAME

Motor Frame	1 Phase ODP	1 Phase TEFC	3 Phase ODP	3 Phase TEFC/EXPL
48	⅓	—	—	—
56	½-2	½-2	½-2	½-2

DIMENSIONS AND WEIGHTS

Pump	A	B	D	E	F	H	L	O	P	W	X	Y	Z	CP	Motor Frame	Wt. (lbs.)
1x1¼-5							3⅜	7				2⅜₁₆	3⅛	13½	48	55
	6¾	5⅝	4⅛	2⁹⁄₁₆	5	1³⁄₃₂		7⅛	⅞	4	4			15½	56	67
1¼x1½-5							3⅛	7⅛				2¼	2⁹⁄₁₆	15¼	56	68

(All dimensions are in inches and weights in lbs. Do not use for construction purposes.)

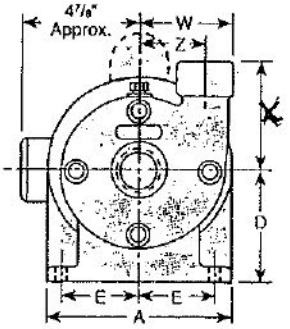

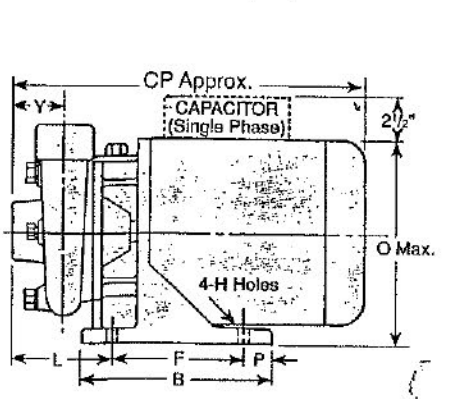

71-0003,-0004,-0006, &-0010

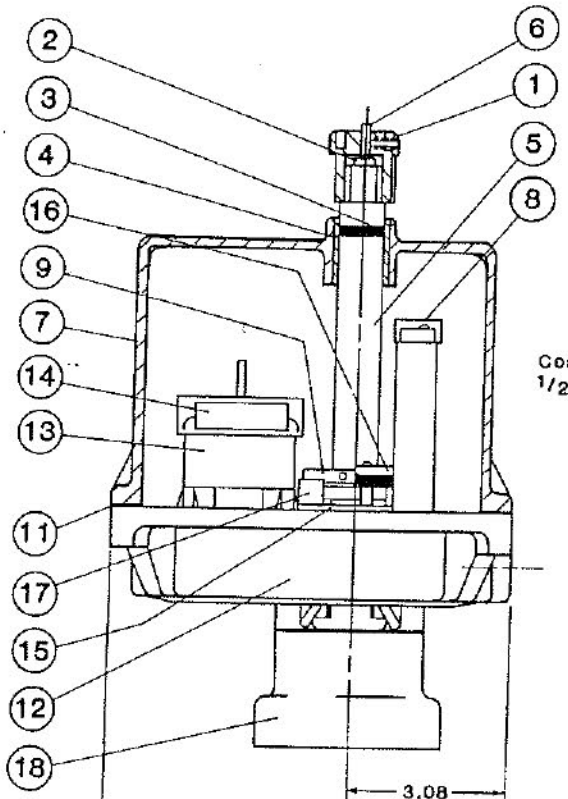

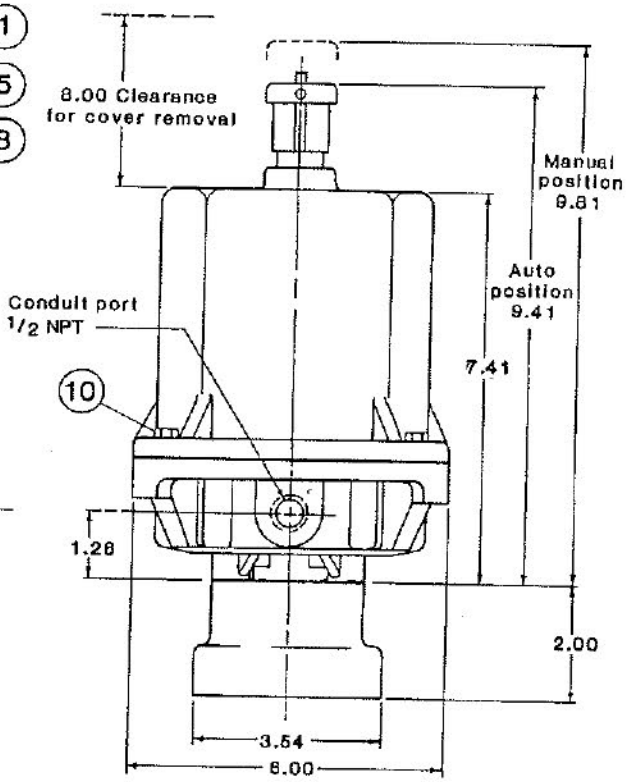

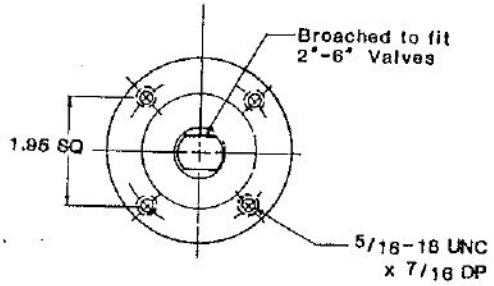

TECHNICAL DATA

VOLTAGE — 20 VAC 60/50 HZ , 1 PHASE — STANDARD

OPERATION — STANDARD REVERSIBLE (UNIDIRECTIONAL UPON REQUEST)

LIMIT SWITCHES — UL & CSA LISTED — 15 AMPS @ 1/3 HP, 125 OR 250 VAC; 1/2 AMP, 125 VDC; 1/4 AMP, 250 VDC ; 5 AMPS, 120 VAC "L" (LAMP LOAD)

AMBIENT TEMPERATURE — MINUS 40 DEGREES F TO PLUS 150 DEGREES F ✱

LUBRICATION — HIGH TEMPERATURE GREASE FOR GEARS , SELF-LUBRICATING BEARINGS

MOUNTING POSITIONS — UNIVERSAL

WEIGHT — 12.5 TO 14.5 POUNDS (DEPENDING ON MODEL)

✱ THE ADDITION OF A HEATER AND THERMOSTAT IS RECOMMENDED FOR ALL OUTDOOR INSTALLATIONS AND FOR ALL APPLICATIONS THAT ARE EXPOSED TO HIGH HUMIDITY OR TEMPERATURES BELOW 32 DEGREES F.

PARTS LIST

DESCRIPTION	QTY	PART NO
KNOB — MANUAL	1	15-01
RETAINER — SPRING	1	25-[illegible]
"O" RING	1	14-78
BUSHING	1	22-83
SHAFT — OUTPUT	1	21-86
PUSH ROD — DECLUTCHING	1	21-93
CONTROL COVER	1	10-24
TERMINAL STRIP	1	72-01
CAM	2	68-05
COVER BOLTS 1/4-20 x 3/4	4	126X470-3
GASKET	1	16-27
GEAR CASE ASSEMBLY	1	AS REQUIRED
MOTOR	1	AS REQUIRED
CAPACITOR	1	AS REQUIRED
MICRO-ADJUSTMENT PLATE	2	65-14
LIMIT SWITCH	2	63-01
MICRO-ADJUSTMENT CAM	2	68-07

DL305
Selecting the Best CPU for Your Application
STEP 2A

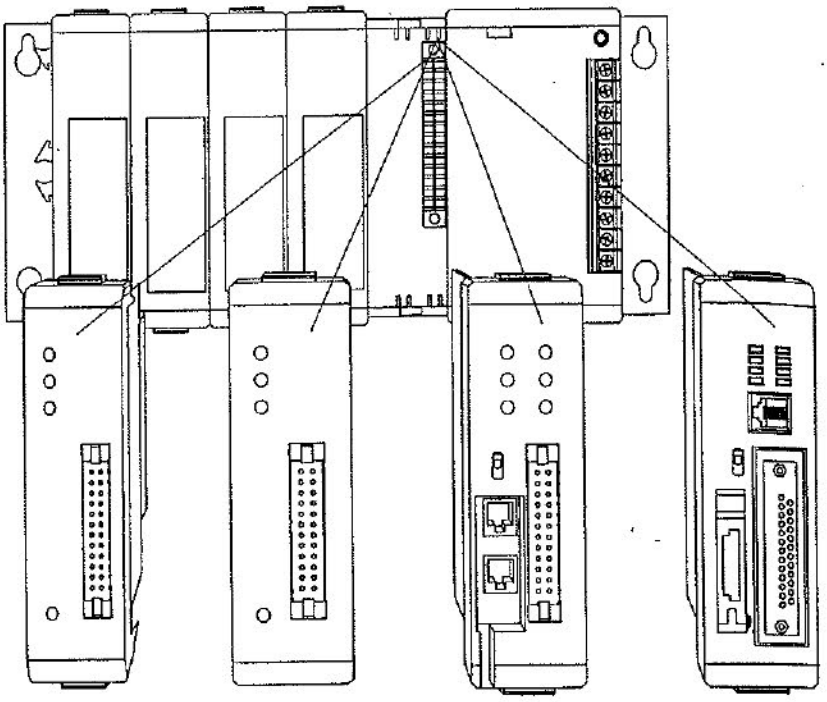

DL330 *DL330P* *DL340* *DL350*

How do You Choose?

We have four conventional CPUs and four specialty CPUs in the DL305 family. There are many considerations, most of which depend on your particular application. Our regular CPUs, which offer traditional control via RLL style programming, are great for most applications. The chart shown here provides a quick comparison. If you need to control I/O with a personal computer, or if you want to run a BASIC program in a CPU instead of ladder logic, then check out the specialty CPUs on page 3–13.

DL330 - The DL330 design has been very popular for many years. It offers the lowest cost solution in the DL305 family. It is great for machines that need little (if any) communications between the CPU and other devices.

DL330P - The DL330P is very similar to the DL330. There are a few minor differences, but the major difference is that the DL330P uses the RLL*PLUS* instructions. This is a flowchart style of programming that can be easier to debug than traditional RLL, especially for beginners.

DL340 - The DL340 offers a very fast scan rate, two RS232C ports (one even with built-in MODBUS® RTU) and additional I/O points. Need RS422? Simply add an FA–UNICON converter to one of the ports. If you need powerful communications, or even just an extra 16-point I/O card, the DL340 CPU offers the lowest cost DL305 solution. This new CPU allows you to make the most of your investments in a DL305 (or compatible) system.

DL350 - The DL350 is our newest and most powerful DL305 CPU. It is a spin-off of our two most powerful CPUs, namely the DL450 and DL250. It is plug compatible with older bases, analog and discrete I/O modules. The instruction set and I/O numbering scheme are similar to our DL105, DL205 & DL405 PLCs. The communications capabilities have also been greatly enhanced to now include Remote I/O, MODBUS Master and Slave protocols as well as our own *Direct*Net and K–Sequence protocols. For even more features, check out our new bases. These new bases allow for greater I/O expansion capabilities and for future intelligent I/O modules.

DL305 CPU Specifications

	DL330	DL330P	DL340	DL350
System Capacity				
Total Memory (K words)	3.91	3.91	3.98	14.8
Ladder Memory (K words)	3.7	3.7	3.7	7.5
CMOS RAM	Yes	Yes	Yes	No
UVPROM	Opt.	Opt.	Opt	No
EEPROM	No	No	Opt.	Flash
Total I/O points using:				
Local I/O	128	128	136	144
Local and Expansion I/O	176	176	184	304
Remote I/O[1]	N/A	N/A	N/A	512
I/O point density	8/16	8/16	8/16	8/16
Slots per base (CPU requires 1 slot)	5/8/10	5/8/10	5/8/10	5/8/10
Performance				
Contact execution (boolean)	6.6µs	28.4µs	.87µs	.61µs
Typical scan (1K boolean)[2]	15ms	20ms	4–5ms	2.0ms
Programming & Diagnostics				
RLL Ladder Style	Yes	Yes	Yes	Yes
RLL *PLUS* (flowchart style)	No	Yes	No	Yes
Run Time Editing	No	No	No	Yes
Variable Fixed Scan	No	No	No,	Yes
Handheld programmer port	Yes	Yes	Yes	Yes
Built-in RS232C ports	No[3]	No[3]	2	2
Real time Clock / Calendar	No	No	No	Yes
Instructions (see page 3–65 for list)	61	65	63	129
Control relays	140	77	196	1024
Shift register bits	128	CRs	128	CRs
Stages (RLL *PLUS* only)	N/A	128	N/A	1024
Timers/Counters	64	64	64	256 / 128
Immediate I/O	No	No	No	Yes
Subroutines	No	No	No	Yes
For/Next Loops	No	No	No	Yes
Timed Interrupt	No	No	No	Yes
Integer Math	Yes	Yes	Yes	Yes
Floating Point Math	No	No	No	Yes
PID	No	No	No	Yes
Drum Sequencers	No	No	No	Yes
Bit of Word	No	No	NO	Yes
ASCII Print	No	No	No	Yes
Data registers	128	128	192	7168
Internal diagnostics	Yes	Yes	Yes	Yes
Password security	Yes	Yes	Yes	Multi-Level
Battery backup	Yes	Yes	Yes	Yes
Communications				
Built-in Ports	No	No	Yes	Yes
*Direct*NET™ Master	No	No	Yes	Yes
*Direct*NET™ Slave	w/DCU	w/DCU	Yes	Yes
MODBUS® RTU Master	No	No	No	Yes
MODBUS® RTU Slave	No	No	Yes	Yes
Data Communications Unit	Yes	Yes	N/A	N/A
Specialty modules				
ASCII BASIC	Yes	Yes	Yes	TBD
phone/radio modem	Yes	Yes	Yes	TBD
triple ports	Yes	Yes	Yes	TBD
Temp. Transducer	Yes	Yes	Yes	Yes
Thermocouple	Yes	Yes	Yes	Yes
Analog Input (# channels max.)	112	112	128	TBD
Analog Output (# channels max.)	28	28	32	TBD
High Speed Counter (10KHZ)	Yes	Yes	Yes	TBD

1 PLC *Direct*™ does not sell remote I/O for the DL305 systems, however; the CPUs we sell do support the remote I/O which has been sold by previous Koyo Electronics vendors.

2 Our 1K program includes contacts, coils, and scan overhead. If you compare our products to others, make sure you include their scan overhead.

3 Both DL330 and DL330P require a Data communication unit for programming. For RS232, choose the D3–232–DCU. This is required to program either PLC with *any* personal computer software package.

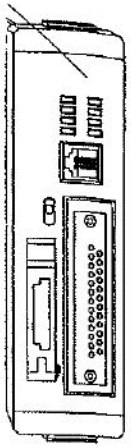

DL350

CPU Hardware Features

The following diagram shows the various hardware features found on the DL330, DL330P and DL340 CPUs.

CPU Status Indicators		
RUN	ON OFF	CPU is in RUN mode CPU is in Program mode
BATT	ON OFF	Memory backup voltage low Memory backup voltage good
CPU	ON OFF	CPU failure (Error detected when the watchdog timer is not processed within 100ms. The run output from the power supply will be turned off.) CPU good
PWR	ON OFF	CPU power good CPU power failure
PORT1 RX/TX	Red Green	Flashing red indicates the CPU port is receiving data Flashing green indicates the CPU port is sending data
PORT2 RX/TX	Red Green	Flashing red indicates the CPU port is receiving data Flashing green indicates the CPU port is sending data

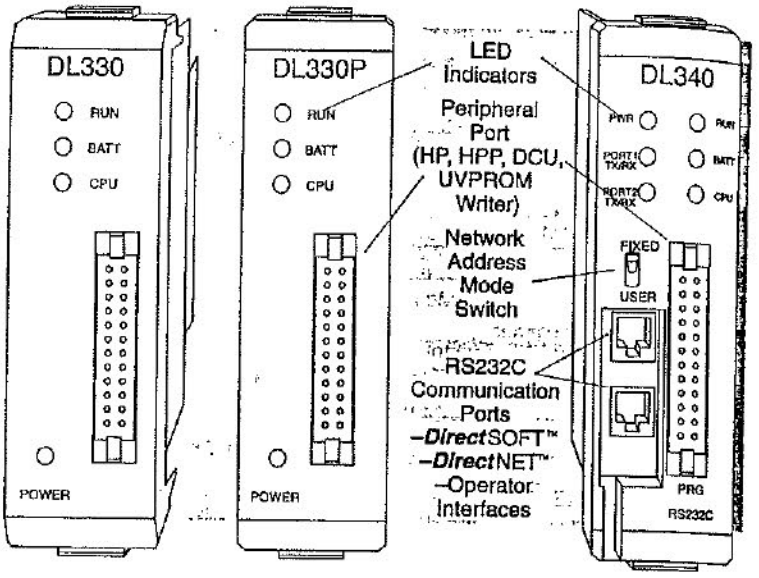

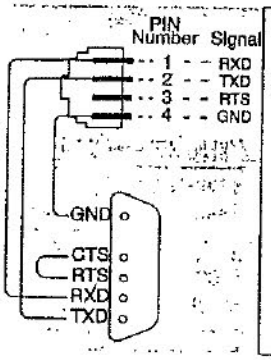

D3–340 RS232C Communication Port Specs.

Connector	RJ11
Network Address	01 to 90
Baud Rate	38400, 19200, 9600, 4800, 2400, 1200, 600, 300
Parity	None
Transfer Mode	HEX / ASCII Half-duplex Asynchronous
Data bits	8
Start bits	1
Stop bits	1
Turn Around Delay	0 to 1980 in 20 ms intervals (preset with R777)

EEPROM & UVPROM Chips

The DL305 CPUs come with on-board RAM and a battery. If you need additional program security, you may want to choose from our EEPROM & UVPROM memory.

D3–CPU–UV — Optional UVPROM memory. Four (4) chips per pack. Only 1 chip is required for the CPU. A D3–PWU Prom Writer Unit is required for programming the UVPROM.

D3–340–EE — Optional EEPROM memory for the D3–340 only. Four (4) chips per pack. Only 1 chip is required for the CPU. No extra programming device is necessary.

D3–D4–BAT — Spare battery (lithium 3.0V). Also used for DL430 and DL440 CPUs.

Hardware switches

A side view of all DL305 CPUs reveals several types of hardware switches.

DL330 and DL330P both have a 2 position dipswitch for selecting retentive memory and a jumper switch for selecting UVPROM and RAM options.

The DL340 has a jumper switch for selecting UVPROM, EEPROM and RAM options. 2 rotary switches to select network addresses and an 8 position dipswitch for selecting baud rates (300 to 38.4K baud), communication mode (slave, master, peer, MODBUS® RTU), and memory options.

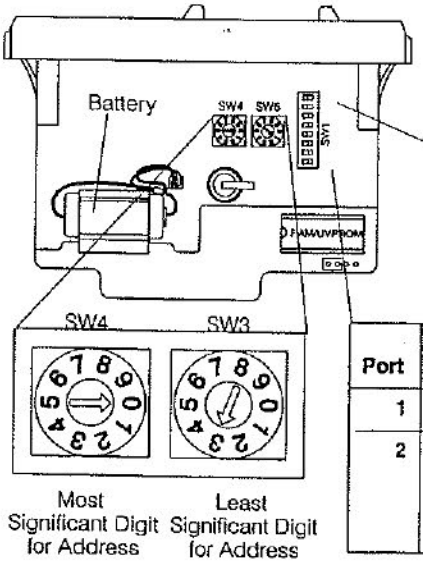

Port	Bit 6	Bit 7	Protocol	Address Range
1	N/A	N/A	Slave	1 – 90
2	Off Off On On	Off On Off On	Slave Master Peer MODBUS/ RTU*	1 – 90 0 1 – 90 1 – 247

DL305 Selecting a Programming Device

STEP 2B

Programming the DL305 CPUs

PLC *Direct*™ offers two tools with which to program and debug the DL305 CPUs. They are Handheld Programmers and *Direct*SOFT™.

DL305 Handheld Programmers

The DL305 Handheld was designed to be a simple program entry and debugging tool. The handheld can mount directly to the programmer port on the CPU or it can be attached using an optional cable. There is also an optional mounting bracket, D3-MBZL (not available for DL350).

D3-HPP — only works with the DL330P with RLL*PLUS* programming.

D3-HP — only works with the DL330 and DL340 CPUs, which have standard RLL programming only.

D3-HPCBL — 1.5m (4.2ft) shielded cable for connecting the handheld to the CPU.

D2-HPP — only works with the DL350 with RLL*PLUS* programming.

*Direct*SOFT™

*Direct*SOFT™ is a full-featured Windows™ based programming package which runs on your personal computer. If you're using a DL340 or DL350 CPU, then you can connect the PC directly to the CPU with a programming cable. **If you're using a DL330 or DL330P CPU, then you must have a DL305 Data Communications Unit.** We recommend the D3-232-DCU which supports RS232C communications.

Programming the DL330 or DL330P CPU
(Data Communications Unit required for use with *Direct*SOFT™)

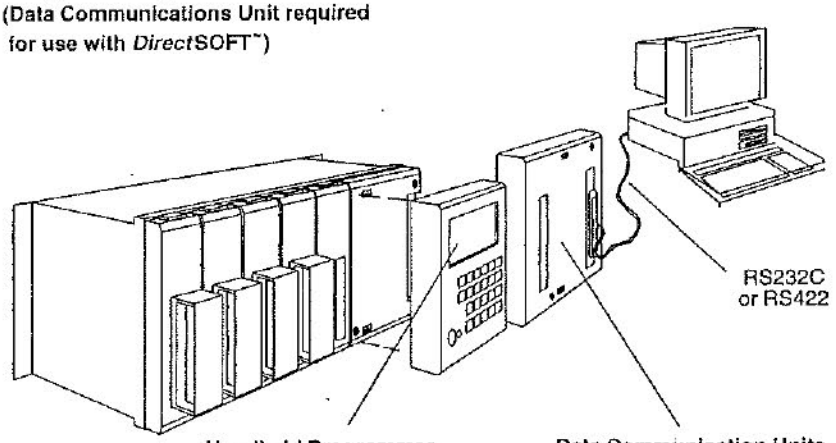

Programming the DL340 CPU
2 Built-in RS232C Communication Ports

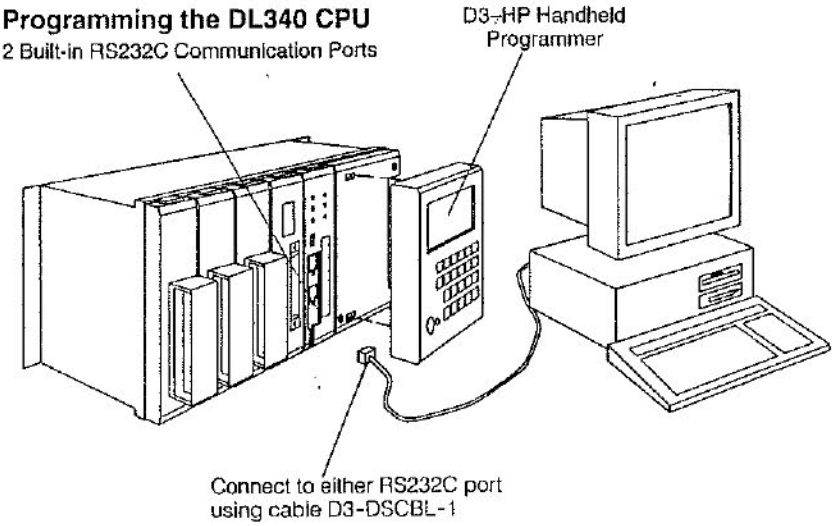

Programming the DL350 CPU
2 Built-in RS232C Communication Ports

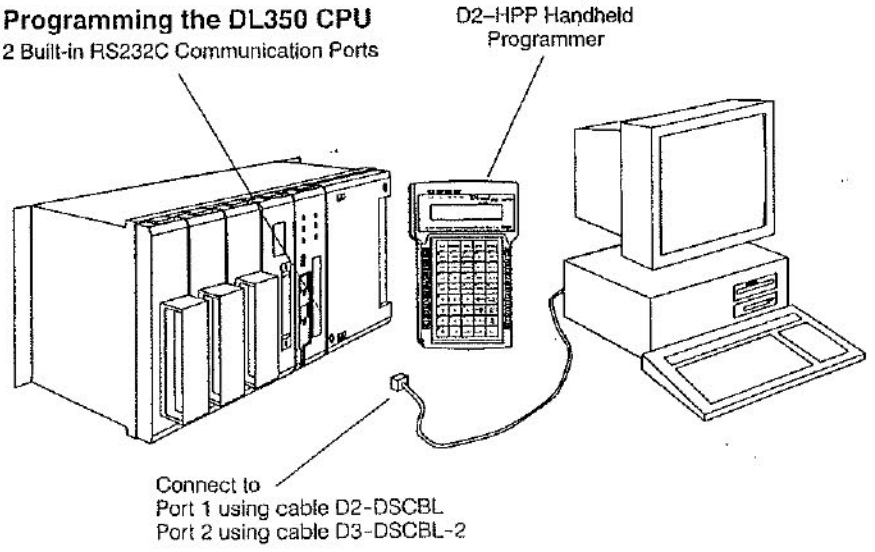

D3–HP & D3–HPP Handheld Functions DL330 / DL330P / DL340

The DL305 handheld programmer has a very simple cost effective design. Data is displayed by 4 seven segment LED displays, and LEDs that illuminate behind a silk screen display. Data is entered by a simple key pad. The following functions are supported by the Handheld.

Programming Operations

–Read, write, or erase programs
–Insert or Delete an instruction
–Search for a specific instruction
–Locate a specific address
–Read or write to cassette tapes
–Enter password

Machine Monitoring

–I/O status (up to 16 simultaneously)
–On/Off status for contacts, coils, and control relays
–Register values
–Timer and counter current values

Debugging

–Forcing (one scan only)
–Change and display PLC modes (run and program mode)
–Program syntax check
–Predefined error codes

D2–HPP Handheld Functions (DL350 Only)

Many handheld tasks involve the use of auxiliary Functions. The "AUX" Functions perform different operations, ranging from simple operating mode changes to copying programs to the HPP EEPROM. They are divided into categories that affect different system parameters. Through the use of Editing keys the DL205 HPP also supports; run-mode edits, status display of word and bit data, program entry / edit etc...

NOTE to use this unit to program the DL350 CPU this unit must have firmware revision V1.8 or greater. Use AUX 61 to check the revision level. Part Number D2–HPP–U contains the necessary upgrade parts. Disassembly of the D2–HPP is required to install the upgrade.

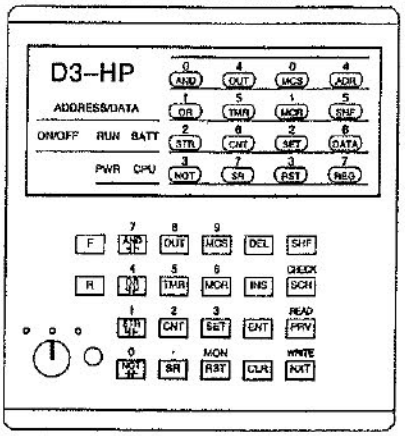

Required for DL330 & DL340

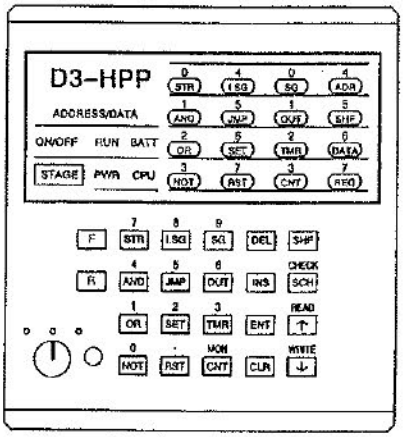

Required for DL330P!

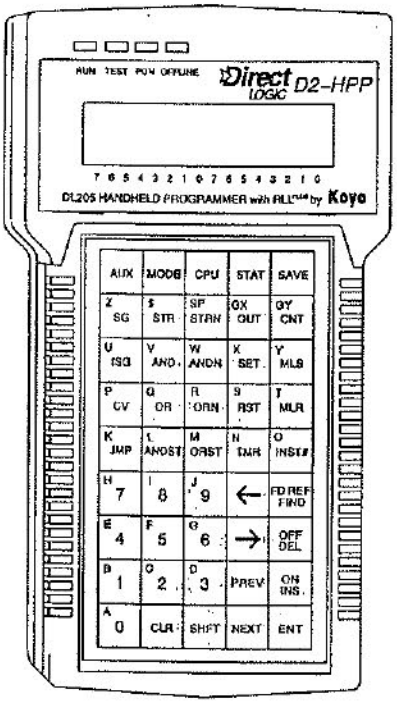

Required for DL350

*Direct*SOFT™ Features

DirectSOFT has many useful features which can make programming much easier. This is especially true if you're comparing it to a handheld programmer. For example, you can view multiple programs at the same time, ... on the same screen, ... and with on-line status! ***Direct***SOFT supports both on-line and off-line programming. Plus, with symbolic names, you can develop your entire program with "nicknames" and then assign the element addresses later. You can also display a program cross reference and element usage table on the screen while you're creating the program. Cut / Copy / Paste of program elements within programs and across programs. Online debugging of your program using data views, status displays etc. Need a printout? ***Direct***SOFT offers an incredible array of printing options, including zoom, multi-column, etc. For a better description of ***Direct***SOFT features, see page 6–5.

The DL330 and DL330P CPUs require a Data Communications Unit for use with ***Direct***SOFT. There are two versions from which to choose. D3–232–DCU is the most popular because it allows access from any personal computer with a standard serial port. If you need to access the CPU from farther away than RS232C will allow or if you need to network several DL330's together, the D3–422–DCU with it's RS422 interface is the better choice.

Both the DL340 and the DL350 CPUs have two RS232C serial ports built-in. The DL350 additionally has RS422 capability built-in, so no additional hardware is required to use ***Direct***SOFT.

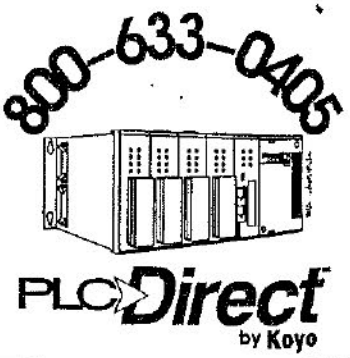

STEP 5A

Verify Planned I/O Module Locations

The design of the DL305 has a successful 10 year history. Each time the product family has grown or has been enhanced, compatibility with the earlier products has been preserved to protect customer investments. This has resulted in an I/O numbering system and I/O location scheme that has some special requirements.

The adjacent table explains the rules that pertain to module location. Some specialty modules have additional requirements. These are explained in their respective module data sheets starting on page 3–34 of catalog. One thing to remember is the power budget will limit where some modules can be placed in a base. The power budget is explained on page 3–30.

Module Placement Guidelines

Device	Placement
CPU	The CPU must reside in the first slot of the local CPU base (closest to the power supply). The CPU slot *does* consume an I/O slot. For example, a D3–05B 5-slot base has a slot for the CPU and 4 slots for I/O modules.
16 Point I/O Modules	A maximum of eight 16 point modules may be installed in a system. However, the actual number allowed depends on the type of CPU you are using. **DL330/DL330P** — max. of seven 16pt. modules. **DL340/DL350** — maximum of eight 16pt. modules. (Note, some specialty modules, such as the High Speed Counter and Thumbwheel Interface Unit, require 16 points and are treated as 16pt. modules.) In any case, the 16 point modules must be in the first 8 slots adjacent to the CPU. They may roll over into an expansion base if necessary, but some restrictions may apply. (See page 3–23 for example addressing.) If any of the eight slots adjacent to the CPU are not used for 16 point modules, they can be used for 8 point modules.
Analog	Analog modules must reside in any valid 16 point I/O module slot. **Note, the F3–04DAS and F3–04DASX modules cannot reside in slot 3 of any base.**
ASCII BASIC Modules	ASCII BASIC modules can be placed in any valid 16 point I/O slot. **Note, these modules cannot reside in slot 3 of any base.**
High Speed Counter	High Speed Counters must be used in the first 4 I/O module slots in the local CPU base.

I/O point usage table for modules

The following table indicates the number of I/O points that are used by each module. Use this information to ensure your I/O configuration stays within the valid I/O count of your chosen CPU.

DC INPUT	
D3–08ND2	8
D3–16ND2–1	16
D3–16ND2–2	16
D3–16ND2F	16
F3–16ND3	16
AC INPUT	
D3–08NA–1	8
D3–08NA–2	8
D3–16NA	16
AC/DC INPUT	
D3–08NE3	8
D3–16NE3	16

DC OUTPUT	
D3–04TD1	4
D3–08TD1	8
D3–08TD2	8
D3–16TD1–1	16
D3–16TD1–2	16
D3–16TD2	16
AC OUTPUT	
D3–04TAS	4
F3–08TAS	8
D3–08TA–1	8
D3–08TA–2	8
F3–16TA–1	16
D3–16TA–2	16
RELAY OUTPUT	
D3–08TR	8
F3–08TRS–1	8
F3–08TRS–2	8
D3–16TR	16

ASCII BASIC	
F3–AB128	16
F3–AB128–T	16
SPECIALTY MODULES	
D3–08SIM	8
D3–HSC	16
ANALOG	
D3–04AD	16
F3–04ADS	16
F3–08AD	16
F3–08TEMP	16
F3–08THM–n	16
F3–16AD	16
D3–02DA	16
F3–04DA–1	16
F3–04DA–2	16
F3–04DAS	16

D3–16TD1–2 DC Output

Outputs per module	16 (current sinking)
Commons per module	4 (internally connected)
Operating voltage	5–24VDC
Output type	NPN transistor (open collector)
Peak voltage	45VDC
AC frequency	N/A
ON voltage drop	2.0V @ 0.5A
Max current	0.5A / point 1.6A common
Max leakage current	0.3 mA @ 40VDC
Max inrush current	3A / 20ms 1A / 100ms
Minimum load	1 mA
Base power required	9V (40mA Max) 3mA+2.3mA/ON pt. 24V 6mA/ON pt. (96mA Max)
OFF to ON response	0.1 ms
ON to OFF response	0.1 ms
Terminal type	Removable connector
Status indicators	Logic Side
Weight	5.6 oz. (160 g)
Fuses	4 (One 3A per common) Non–replaceable

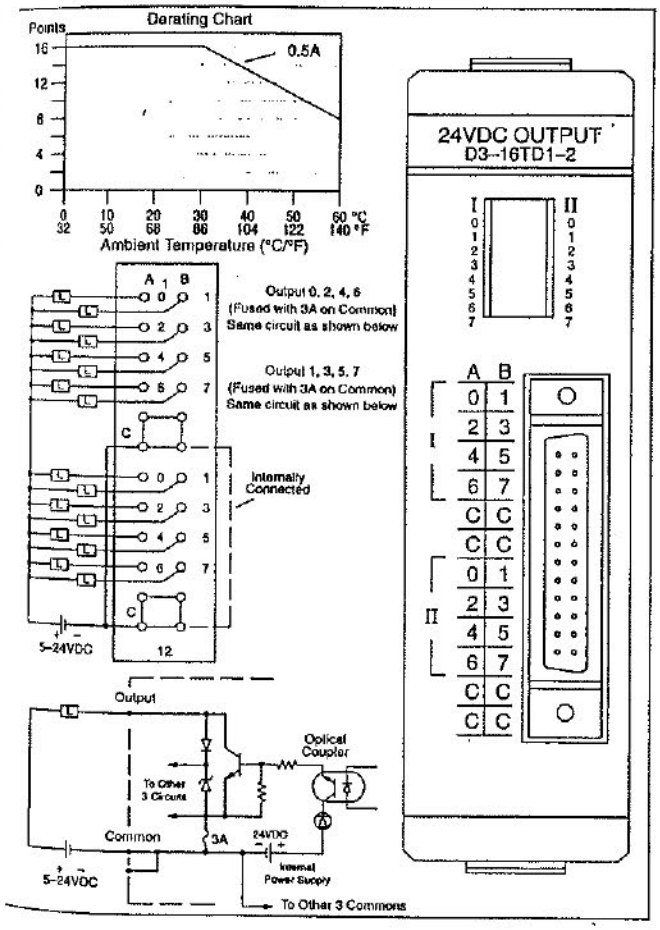

D3–16TD2 DC Output

Outputs per module	16 (current sourcing)
Commons per module	2 (isolated)
Operating voltage	5–24VDC
Output type	NPN transistor (emitter follower)
Peak voltage	40VDC
AC frequency	N/A
ON voltage drop	1.5V @ 0.5A
Max current	0.5A / point 3A common
Max leakage current	0.01 mA @ 40VDC
Max inrush current	3A / 20ms 1A / 100ms
Minimum load	1 mA
Base power required	9V 7.5 mA/ON pt. (180 mA Max) 24V N/A
OFF to ON response	0.1 ms
ON to OFF response	1 ms
Terminal type	Removable
Status indicators	Logic Side
Weight	7.1 oz. (210 g)
Fuses	2 (One 5A per common) Non–replaceable

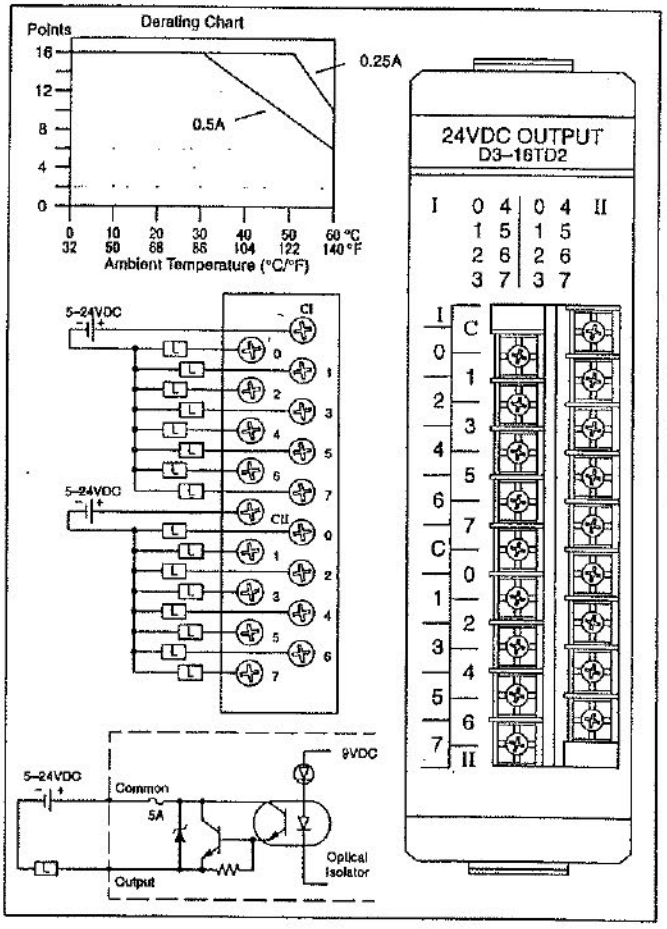

Series A7 Instruction Supplement

- Metering Pump Component Diagram
- Drive Assembly Exploded View Diagram
- Drive Assembly Parts List
- Control Panel Detail
- Wiring Diagram

Metering Pump Component Diagram

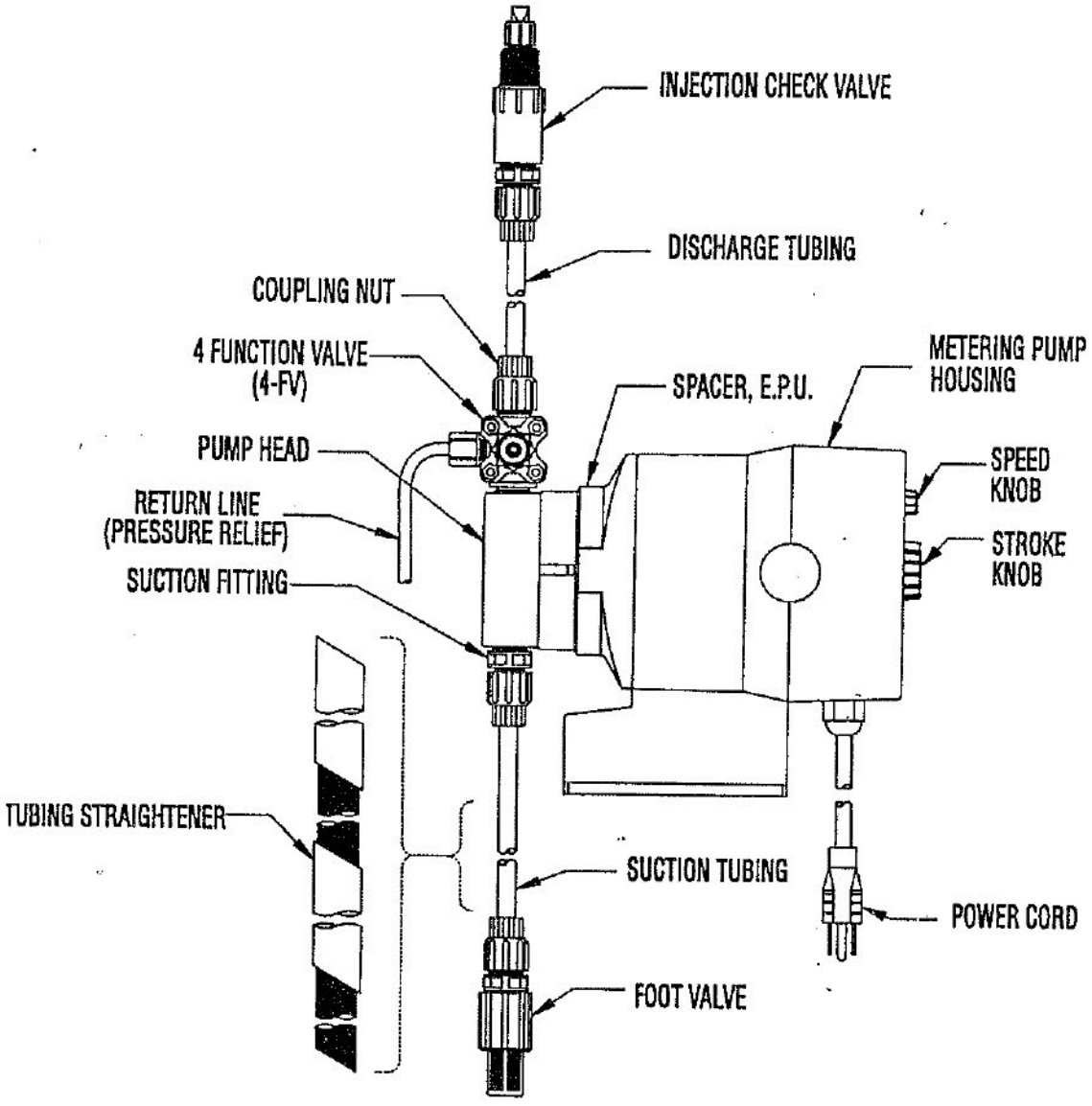

LMI
LIQUID METRONICS DIVISION
MILTON ROY

8 Post Office Square
Acton, MA 01720 USA
TEL: (508) 263-9800
FAX: (508) 264-9172

Catalog Sec. 6.0 Pg. 1250
Replaces same of 11/92
1633.C7/94

Series A7 Drive Assembly Exploded View Diagram

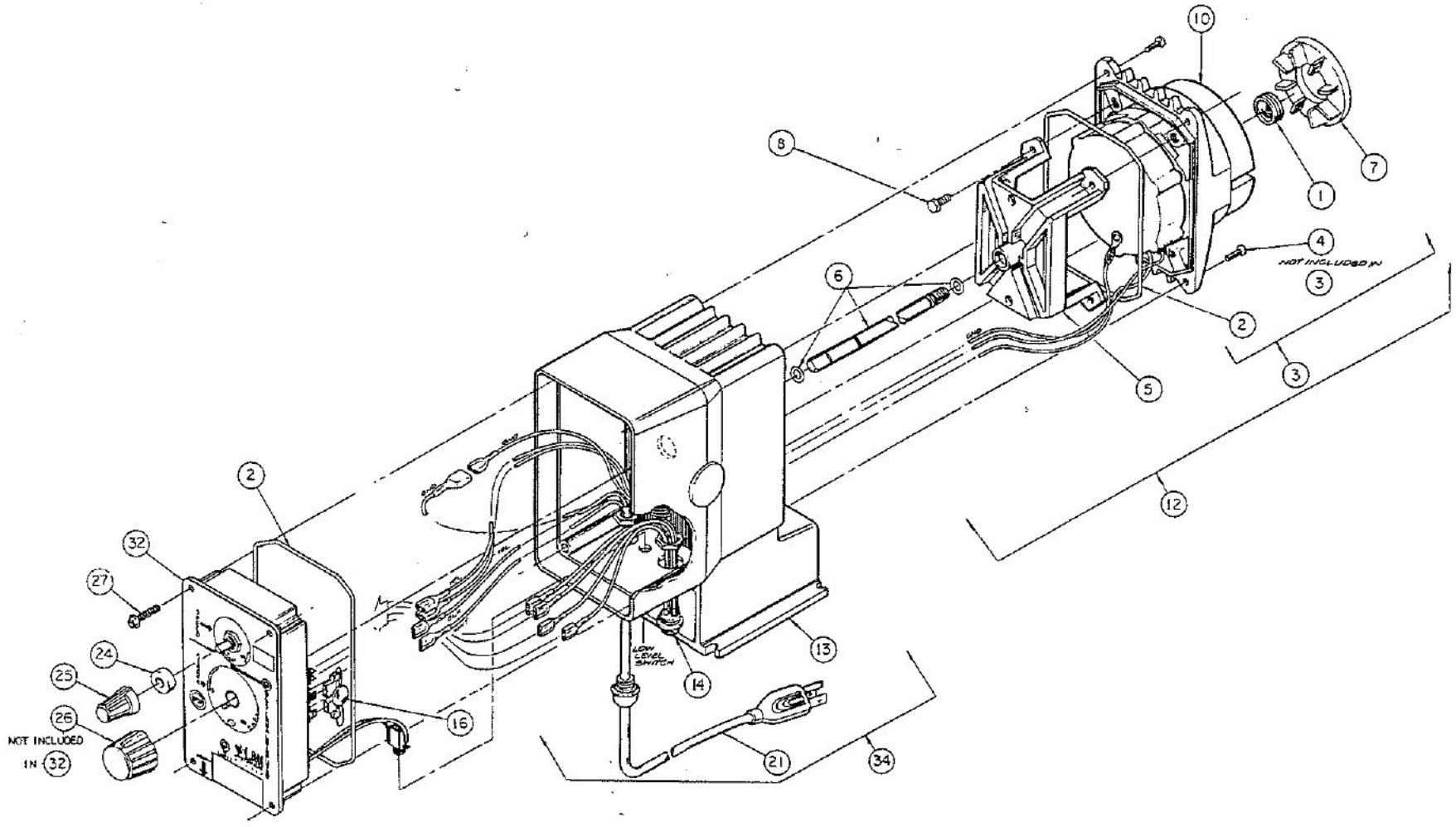

Series A7 Drive Assembly Parts List

Key No.	Model Series	Part No.	Description	Qty.
1	A7	10973	Seal	1
2	A7	10166	O-Ring	1
3	A741	28085	EPU ASM w/Disk, 120V	1
	A742, A743, A745, A746, A747	28086	EPU ASM w/Disk, 230V	1
	A751	27465	EPU ASM w/Disk, 120V	1
	A752, A753, A755, A756, A757	27466	EPU ASM w/Disk, 230V	1
	A761	27467	EPU ASM w/Disk, 120V	1
	A762, A763, A765, A766, A767	27468	EPU ASM w/Disk, 230V	1
	A771	29272	EPU ASM w/Disk, 120V	1
	A772, A773, A775, A776, A777	29273	EPU ASM w/Disk, 230V	1
	A781	29274	EPU ASM w/Disk, 120V	1
	A782, A783, A785, A786, A787	29275	EPU ASM w/Disk, 230V	1
4	A7	30306	Screw	8
5	A7	26838	Bracket	1
6	A7	31768	Adjustment Shaft Assembly	1
7	A74, A77	29445	Disk, 0.5	1
	A75, A78	29437	Disk, 0.9	1
	A76	29442	Disk, 1.8	1
8	A7	32498	Screw	4
10	A741, A751	30123	EPU, 120V	1
	A742, A743, A745, A746, A747 A752, A753, A755, A756, A757	30124	EPU, 240V	1
	A761	30128	EPU, 120V	1
	A762, A763, A765, A766, A767	30129	EPU, 240V	1
	A771, A781	30100	EPU, 120V	1
	A772, A773, A775, A776, A777 A782, A783, A785, A786, A787	30101	EPU, 240V	1
12	A741	31915	EPU w/Stroke Adjustment & Disk	1
	A742, A743, A745, A746, A747	31916	EPU w/Stroke Adjustment & Disk	1
	A751	31911	EPU w/Stroke Adjustment & Disk	1
	A752, A753, A755, A756, A757	31912	EPU w/Stroke Adjustment & Disk	1
	A761	31913	EPU w/Stroke Adjustment & Disk	1
	A762, A763, A765, A766, A767	31914	EPU w/Stroke Adjustment & Disk	1
	A771	31917	EPU w/Stroke Adjustment & Disk	1
	A772, A773, A775, A776, A777	31918	EPU w/Stroke Adjustment & Disk	1
	A781	31919	EPU w/Stroke Adjustment & Disk	1
	A782, A783, A785, A786, A787	31920	EPU w/Stroke Adjustment & Disk	1

Key No.	Model Series	Part No.	Description	Qty.
13	A7	29031	Housing	1
14	A7	28907	Jack Assembly	1
16	A741, A751, A761, A771, A781	10626	Varistor Asm 120V	1
	A742, A752, A762, A772, A782 A743, A753, A763, A773, A783 A745, A755, A765, A775, A785 A746, A756, A766, A776, A786 A747, A757, A767, A777, A787	10627	Varistor Asm 240V	1
21	A741, A751, A761, A771, A781	29033	Power Cord Asm, 120V	1
	A742, A752, A762, A772, A782	29039	Power Cord Asm, 240V	1
	A743, A753, A763, A773, A783	29042	Power Cord Asm, 220-240V, DIN	1
	A745, A755, A765, A775, A785	29044	Power Cord Asm, 200-240V, UK	1
	A746, A756, A766, A776, A786	29046	Power Cord Asm, 200-240V, AUST	1
	A747, A757, A767, A777, A787	29048	Power Cord Asm, 200-240V, SWISS	1
24	A7	30803	Gasket	1
25	A7	30709	Knob	1
26	A7	31890	Knob	1
32	A741, A751	29035	Control Panel Assembly, 120V	1
	A742, A743, A745, A746, A747 A752, A753, A755, A756, A757	29041	Control Panel Assembly, 240V	1
	A761	31737	Control Panel Assembly, 120V	
	A762, A763, A765, A766, A767	31738	Control Panel Assembly, 240V	
	A771	29378	Control Panel Assembly, 120V	1
	A772, A773, A775, A776, A777	29379	Control Panel Assembly, 240V	1
	A781	29380	Control Panel Assembly, 120V	1
	A782, A783, A785, A786, A787	29381	Control Panel Assembly, 240V	1
34	A741, A751, A761, A771, A781	29034	Housing Assembly, 120V	1
	A742, A752, A761, A772, A782	29040	Housing Assembly, 240V	1
	A743, A753, A763, A773, A783	29043	Housing Assembly, 240V	1
	A745, A755, A765, A775, A785	29045	Housing Assembly, 240V	1
	A746, A756, A766, A776, A786	29047	Housing Assembly, 240V	1
	A747, A757, A767, A777, A787	29049	Housing Assembly, 240V	1
Not Shown	A743, A753, A763, A773, A783 A745, A755, A765, A775, A785 A746, A756, A766, A776, A786 A747, A757, A767, A777, A787	28368	Connector with Wires	1

SERIES A SPECIFICATIONS

SERIES NO.	GALLONS PER DAY		GALLONS PER HOUR		LITERS PER HOUR		mL or CC PER MIN		OUTPUT PER STROKE CC or mL		MAXIMUM INJECTION PRESSURE
	MIN	MAX	MIN	MAX	MIN	MAX	MIN	MAX	MIN	MAX	
A14	.14	16.0*	.006	.66	.023	2.5	.38	41.6	.08	.42	250 PSI (17.3 Bar)
A15	.24	24.0	.01	1.0	.038	3.79	.63	63.0	.13	.63	110 PSI (7.6 Bar)
A16	.48	48.0	.02	2.0	.076	7.57	1.26	126.0	.26	1.26	50 PSI (3.4 Bar)
A17	.15	10.0	.006	.42	.023	1.57	.40	26.3	.07	.26	140 PSI (9.7 Bar)
A18	.27	18.0	.011	.75	.043	2.84	.72	47.3	.14	.47	80 PSI (5.5 Bar)
A34	.028	16.0*	.001	.66	.004	2.5	.08	41.6	.08	.42	250 PSI (17.3 Bar)
A37	.020	10.0	.001	.42	.004	1.57	.07	26.3	.07	.26	140 PSI (9.7 Bar)
A74	.14	16.0*	.006	.66	.023	2.5	.38	41.6	.08	.42	250 PSI (17.3 Bar)
A75	.24	24.0	.01	1.0	.038	3.79	.63	63.0	.13	.63	110 PSI (7.6 Bar)
A76	.48	48.0	.02	2.0	.076	7.57	1.26	126.0	.26	1.26	50 PSI (3.4 Bar)
A77	.15	10.0	.006	.42	.023	1.57	.40	26.3	.07	.26	140 PSI (9.7 Bar)
A78	.27	18.0	.011	.75	.043	2.84	.72	47.3	.14	.47	80 PSI (5.5 Bar)

* at 120 PSI, 10 GPD at 250 PSI

VOLTAGE: 120 Volts AC, 50/60 Hz, single phase
200-250 Volts AC, 50/60 Hz, single phase available
Max Current (@ 120 VAC): Series AX4, AX5, AX6: 1.8 Amps
Series AX7, AX8: 0.9 Amps
Ave. input power: Series AX4, AX5, AX6: 22 Watts @ max speed
Series AX7, AX8: 11 Watts @ max speed

STROKE LENGTH: Adjustable 0-100%
(20% minimum recommended for AX4, AX5 and AX6)
(30% minimum recommended for AX7 and AX8)

STROKE FREQUENCY: Adjustable,
5 to 100 strokes per minute Series A1, A7
1.0 to 100 strokes per minute Series A3

LENGTH: 9.25" (235mm) max

WIDTH: 4.05" (103mm) max

HEIGHT: 8" (203mm) max

SHIPPING WEIGHT: 10 lbs. (4.5 kg)

DISTRIBUTED BY:

LIQUID METRONICS DIVISION, MILTON ROY

19 Craig Road, Acton, MA 01720-5495 • TEL (508) 263-9800 • TLX 95-1781 • FAX (508) 264-9172

The black and yellow design of our products is a trademark of LMI.
Specifications subject to change without notice.
Printed in U.S.A.

SERIES "A" SPECIFICATIONS

GENERAL

Chemical metering pumps shall be positive displacement, Liquifram type pumps. Output volume shall be adjustable while pumps are in operation from zero to maximum capacity of:

A17, A37, A77	- 10 GPD	(38 liters per day)
A14, A34, A74	- 14 GPD	(53 liters per day)
A18, A78	- 18 GPD	(68 liters per day)
A15, A75	- 24 GPD	(91 liters per day)
A16, A76	- 48 GPD	(182 liters per day)

A1, A3 SERIES

Adjustment shall be by readily accessible dial knobs, one for changing stroke length and the other for changing stroke frequency. Both knobs are to be located opposite the liquid handling end. On-off switch shall be integral with frequency control, "off" position to be below lowest frequency setting.

A7 SERIES

Control of A7 series metering pumps shall be selectable between internal and external pulsing by means of a switch integral with frequency control knob. "External" position to be below lowest internally paced frequency setting. Stroke length shall be adjustable by means of readily accessible dial knob. When in external pulsed mode, A7 series units shall accept signals from LMI Flowmeter-Pulser Assemblies or LMI Liquitron® Current-To-Frequency Converter without the use of electrical timer or internal timer.

Chemical metering pumps shall be capable, without a hydraulically backed diaphragm, of injecting chemicals against pressures up to:

A14, A34, A74	-	250 psig	(17.3 Bar)
A17, A37, A77	-	140 psig	(9.7 Bar)
A15, A75	-	110 psig	(7.6 Bar)
A18, A78	-	80 psig	(5.5 Bar)
A16, A76	-	50 psig	(3.4 Bar)

DRIVE

The pump drive shall be totally enclosed with no exposed moving parts. Solid state electronic pulser shall be fully encapsulated with no exposed printed circuit etch and be supplied with quick connect terminals of at least 3/16" (4.75 mm) wide. Electronics shall be housed in chemical resistant enclosure at the rear of the pump for maximum protection against chemical spillage. Electrical power consumption shall not exceed 22 watts per hour under full speed and maximum pressure conditions. Pump weight shall not exceed 14 lbs. (6.5 kg).

AUTOMATIC PRESSURE RELIEF

To eliminate need for pressure relief valve, Liquifram™ shall automatically stop pulsating when discharge pressure exceeds pump pressure rating by not more than 35%

MATERIAL

Chemical metering pump housing shall be of chemically resistant glass fiber reinforced thermoplastic. All exposed fasteners shall be stainless steel. Chemical metering pump valves shall be ball type, with ceramic balls[1] seating on combination valve seat and seal ring. Valve seat and seal ring shall be renewable by replacing only the combination seat-seal ring[2]. Pump head shall be of acrylic (transparent)[3] material capable of resisting the pumped chemical. Fittings and connections at pump head shall be PVC[4].

CHECK VALVES AND TUBING

A total of 16 ft. (4.8 m) of polyethylene tubing[5] shall be provided per pump complete with compression connections. A foot valve with integral one piece strainer shall be provided for the suction line, and an injection check/back pressure valve with ½" NPT male connection for the injection point. The injection check valve shall incorporate a dilating orifice which prohibits scale formation and accumulation of crystalline deposits.

NOTES:

1. - Type 316 stainless steel or Teflon® may be specified.
2. - Polyprel®, Teflon®, or Hypalon® may be specified.
3. - PVDF, PVC, polypropylene, or Type 316 stainless steel may be specified.
4. - PVDF, polypropylene or Type 316 stainless steel may be specified.
5. - 6 ft. (1.8 m) of vinyl suction tubing may be specified in place of polyethylene for the suction side only. ¼" pipe thread may be specified.

LMI
LIQUID METRONICS DIVISION
MILTON ROY

19 Craig Road • Acton, MA 01720 USA • TEL: (508) 263-9800 • FAX: (508) 264-9172

Specifications subject to change without notice.
Printed in U.S.A.

Catalog Sec. 1.1, pg. 1900
Replaces same of 1/92
1143.D 11/92

*Dimensions shown are maximum for largest Liquid End available. These dimensions vary depending on the Liquid End selected.

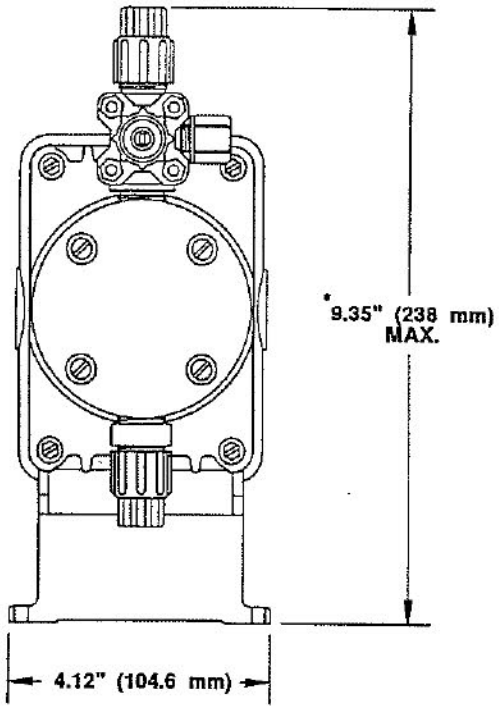

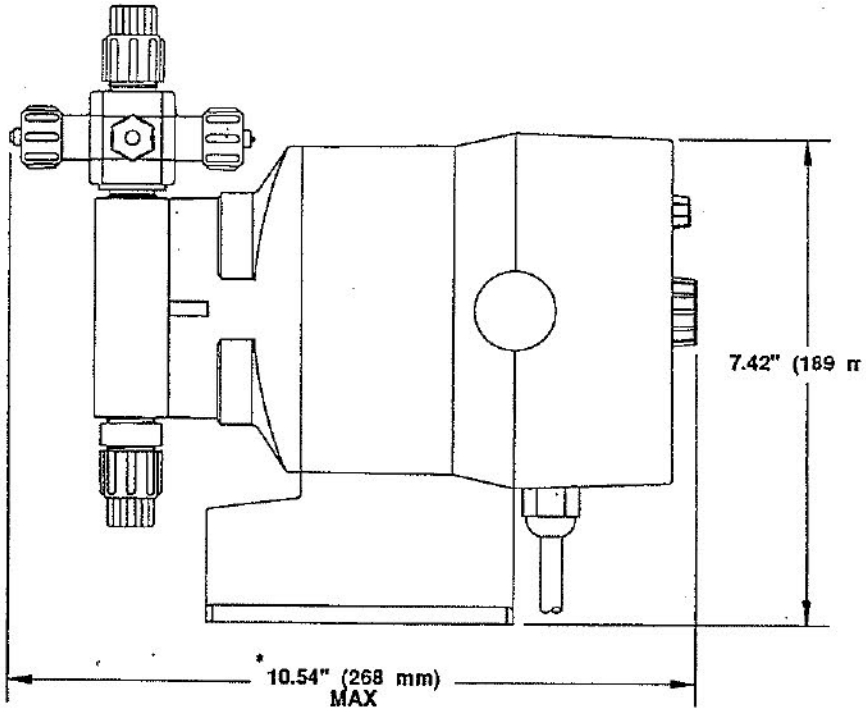

A Series

LE Codes	W	X	Y	Z
61, 62, 65	2.00 (50.8mm)	8.10 (205.7mm)	1.35 (34.3mm)	9.60 (243.8mm)
61S, 62S, 65S	3.10 (78.7mm)	9.60 (243.8mm)	1.35 (34.3mm)	10.70 (271.8mm)
74, 94	2.00 (50.8mm)	8.10 (205.7mm)	1.35 (34.3mm)	9.60 (243.8mm)
75HV,76, 85HV, 86	2.15 (54.6mm)	8.70 (221.0mm)	.80 (20.3mm)	9.75 (247.6mm)
77, 97	2.00 (50.8mm)	8.10 (205.7mm)	1.35 (34.3mm)	9.60 (243.8mm)
91T, 92T, 95T 151, 152, 155 90, 191, 192 193, 196	2.00 (50.8mm)	8.10 (205.7mm)	1.35 (34.3mm)	9.60 (243.8mm)
91S, 91FS 92S, 95S 151S, 152S, 155S 190S, 191S, 192S 193S, 196S	3.10 (78.7mm)	9.60 (243.8mm)	1.35 (34.3mm)	10.70 (271.8mm)

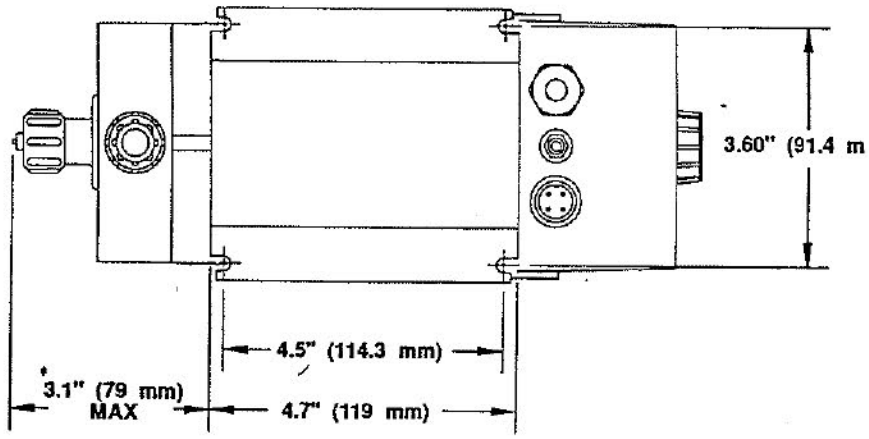

LMI'S SERIES A METERING PUMPS

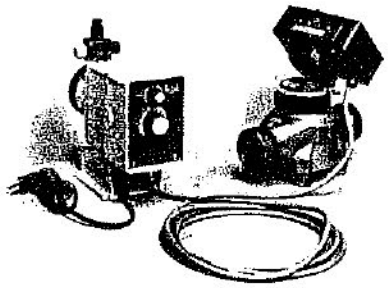

SERIES A7 WITH LMI'S FLOWMETER-PULSER

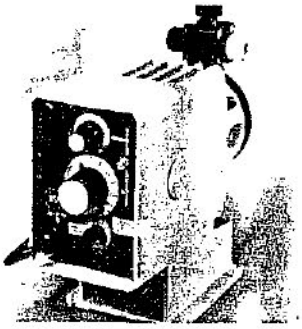

SERIES A3 METERING PUMP

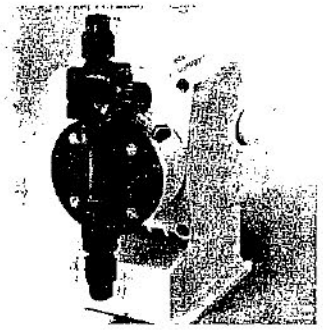

SERIES A1 METERING PUMP

SERIES A7 Instrument Responsive

All Series A7 metering pumps offer the versatility of a selector switch for either manual or automatic control. These pumps will respond to any dry switch closure. Perfect for flow proportional treatment installations, or for use with LMI's Current to Frequency Converter where pump output must vary in response to standard milliampere instrument signal.

SERIES A3 Extended low range - output as low as 0.02 GPD

All Series A3 metering pumps provide outputs as low as 0.02 gallons per day, eliminating the need for a percentage timer or clock in many applications. Independently adjustable stroke length and stroke frequency assures maximum application versatility. Series A34 offers an output range of 300:1 while Series A37 offers an output range of 200:1.

SERIES A1 .14 to 48 GPD - Manual Control

All Series A1 metering pumps offer the versatility of independently adjustable stroke length and stroke frequency. Series A14, A15, and A16 provide output ranges of 100:1 while Series A17 and A18 offer output ranges of 66:1.

THE LMI ADVANTAGE

Inherent pressure limitation, no mechanical linkage. Maximum safety . . . no damage results if pressure builds beyond pump's rated capacity.

Housings of glass fiber reinforced polypropylene. A corrosion proof, chemical resistant package for long, worry free service life.

High compression ratio Liquid Ends. Easy priming and efficient valve action for superior pumping performance.

Power used only during discharge portion of each stroke. Minimum electrical consumption and low heat generation saves you money!!

AVAILABLE CONFIGURATIONS

MODEL NO.						
Drive Ass'y	Liquid End	Materials of Construction	Liquiflram™ (Diaphragm)	Seal Rings	Connections	Accessory
A141*— A341*— A741*—	150FS	Acrylic/Polypropylene/Teflon	Teflon Face	Polyprel™	Tubing .250"	4FV
	152	PVDF/Ceramic	Teflon Face	Polyprel™	Tubing .250"	
	152S	PVDF/Ceramic	Teflon Face	Polyprel™	Tubing .250"	4FV
	155	Polypropylene/Ceramic	Teflon Face	Teflon	Tubing .250"	
	155S	Polypropylene/Ceramic	Teflon Face	Teflon	Tubing .250"	4FV
	157	316 S.S.	Teflon Face	Teflon	Pipe ¼" NPT F	
A151*— A181*— A751*— A781*—	85HV	Polypropylene/316 S.S.	Teflon Face	Teflon	Tubing .5" Dischg. .938" Suct.	
	86	Acrylic/Polypropylene/316 S.S.	Teflon Face	Hypalon	Tubing .5" Dischg. .938" Suct.	
	91FS	Acrylic/Polypropylene/Teflon	Teflon Face	Hypalon	Tubing .375"	4FV
	91S	Acrylic/Polypropylene/Ceramic	Teflon Face	Teflon	Tubing .375"	4FV
	91T	Acrylic/Polypropylene/Ceramic	Teflon Face	Teflon	Tubing .375"	
	92S	PVC/PVDF/Polypropylene/Ceramic	Teflon Face	Teflon	Tubing .375"	4FV
	92T	PVC/PVDF/Polypropylene/Ceramic	Teflon Face	Teflon	Tubing .375"	
	94	PVC/PVDF/Ceramic	Teflon Face	Teflon	Pipe ¼" NPT M	
	95S	Polypropylene/Ceramic	Teflon Face	Teflon	Tubing .375"	4FV
	95T	Polypropylene/Ceramic	Teflon Face	Teflon	Tubing .375"	
	97	316 S.S.	Teflon Face	Teflon	Pipe ¼" NPT F	
	191	Polypropylene/Ceramic	PFA Face	Polyprel™	Tubing .375"	
	191S	Polypropylene/Ceramic	PFA Face	Polyprel™	Tubing .375"	4FV
	192	PVDF/Ceramic	PFA Face	Polyprel™	Tubing .375"	
	192S	PVDF/Ceramic	PFA Face	Polyprel™	Tubing .375"	4FV
A161*— A761*—	61	Acrylic/Polypropylene/Ceramic	PFA Face	Polyprel™	Tubing .375"	
	61S	Acrylic/Polypropylene/Ceramic	PFA Face	Polyprel™	Tubing .375"	4FV
	62	PVC/PVDF/Ceramic	PFA Face	Polyprel™	Tubing .375"	
	62S	PVC/PVDF/Ceramic	PFA Face	Polyprel™	Tubing .375"	4FV
	65	Polypropylene/Ceramic	Teflon Face	Teflon	Tubing .375"	
	65S	Polypropylene/Ceramic	Teflon Face	Teflon	Tubing .375"	4FV
	74	PVC/PVDF/Ceramic	Teflon Face	Teflon	Pipe ¼" NPT M	
	75HV	Polypropylene/316 S.S.	Teflon Face	Teflon	Tubing .5" Dischg. .938" Suct.	
	76	Acrylic/Polypropylene/316 S.S.	Teflon Face	Hypalon	Tubing .5" Dischg. .938" Suct.	
	77	316 S.S.	Teflon Face	Teflon	Pipe ¼" NPT F	
A171*— A371*— A771*—	150	Acrylic/Polypropylene/Ceramic	Teflon Face	Polyprel™	Tubing .250"	
	150FS	Acrylic/Polypropylene/Teflon	Teflon Face	Polyprel™	Tubing .250"	4FV
	150S	Acrylic/Polypropylene/Ceramic	Teflon Face	Polyprel™	Tubing .250"	4FV
	151	Polypropylene/Ceramic	PFA Face	Polyprel™	Tubing .250"	
	151S	Polypropylene/Ceramic	PFA Face	Polyprel™	Tubing .250"	4FV
	152	PVDF/Ceramic	Teflon Face	Polyprel™	Tubing .250"	
	152S	PVDF/Ceramic	Teflon Face	Polyprel™	Tubing .250"	4FV
	155	Polypropylene/Ceramic	Teflon Face	Teflon	Tubing .250"	
	155S	Polypropylene/Ceramic	Teflon Face	Teflon	Tubing .250"	4FV
	156	Acrylic/Polypropylene/316 S.S.	PFA Face	Hypalon	Tubing .5" Dischg. .938 Suct.	
	157	316 S.S.	Teflon Face	Teflon	Pipe ¼" NPT M	

*—The digit which appears just before the hyphen in each complete pump model number designates both voltage and power cord/plug type. When ordering please indicate desired option by inserting one of the following digits in the position just before the hyphen:

[1] 115V AC
[2] 230V AC
[3] 220-240V AC, DIN plug
[5] 240-250V AC, British (U.K.) plug
[6] 240-250V AC, Aust./N.Z plug
[7] 220V AC, Swiss plug

4FV—designates pump is equipped with an LMI Four Function Valve. This diaphragm type anti-syphon/pressure relief valve is installed on the pump head. It provides anti-syphon protection and aids in priming, even under pressure.

Series A7 Control Panel Detail

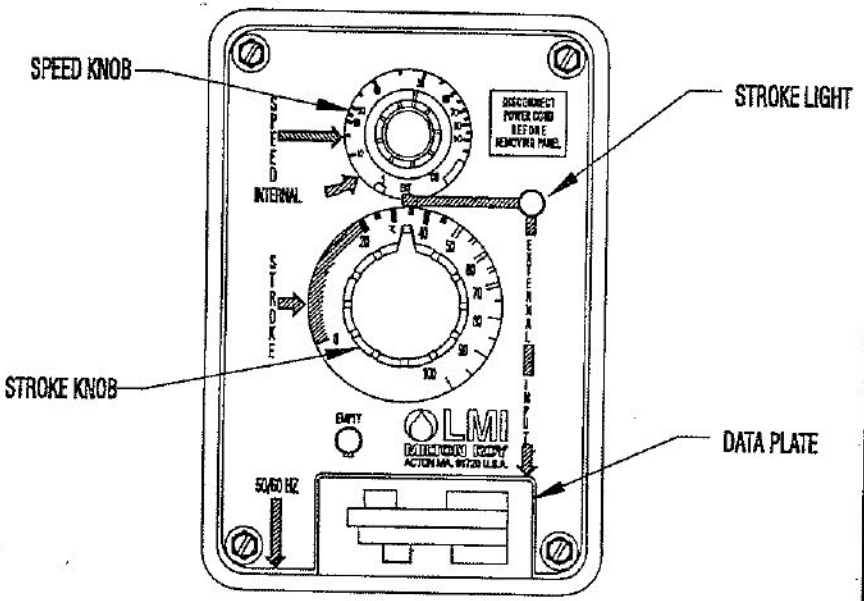

Series A7 Wiring Diagram

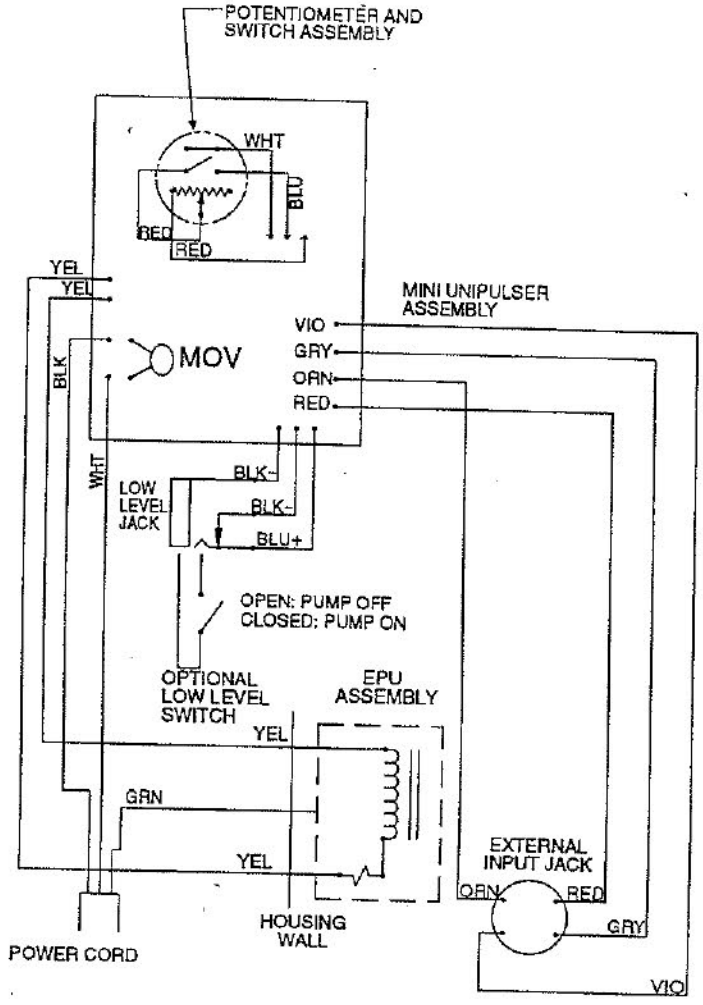

SERIES A
METERING PUMPS
PRODUCT INFORMATION

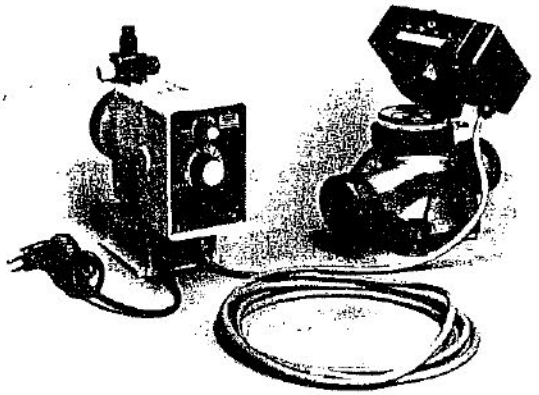

■ *Series A7 metering pumps are instrument responsive with outputs from .14 to 48 GPD.*

■ *Series A1 metering pumps offer manual output control for applications requiring outputs from .14 to 48 GPD.*

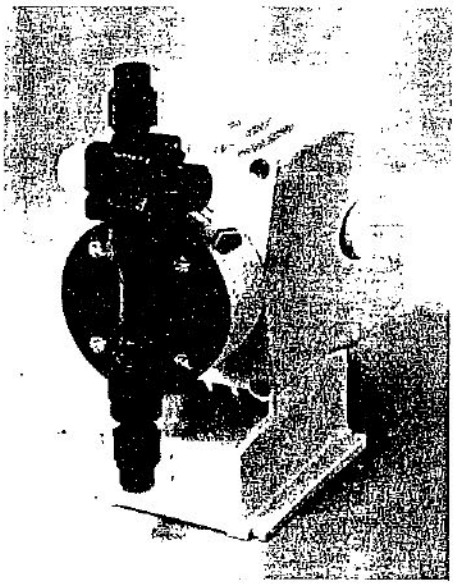

LMI
LIQUID METRONICS DIVISION
MILTON ROY

Bulletin Sec. 1.1 pg. 0250
Replaces same of 2/88
1366.C 11/91

SERIES B AND C

ELECTROMAGNETIC METERING PUMPS

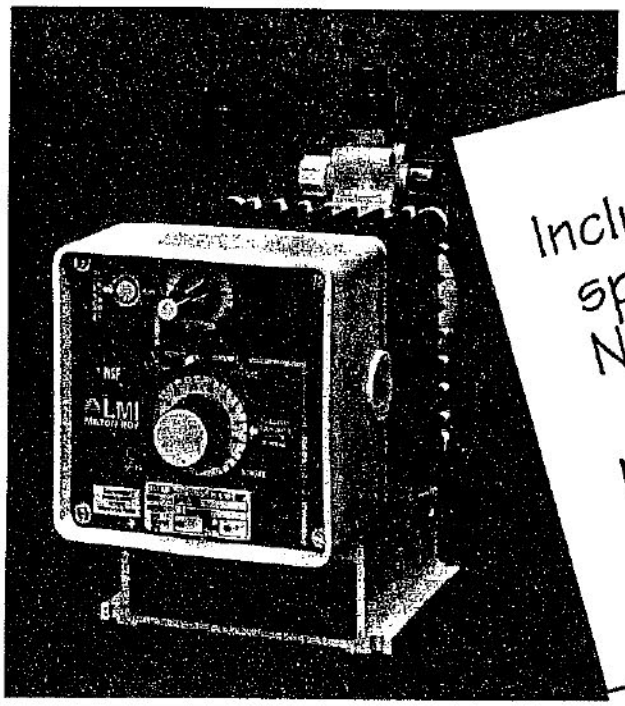

Includes information and specifications on LMI's NEW Series C Metering Pumps and our NEW Super C7 Series of Metering Pumps!

LMI's accurate, dependable Series B Metering Pump

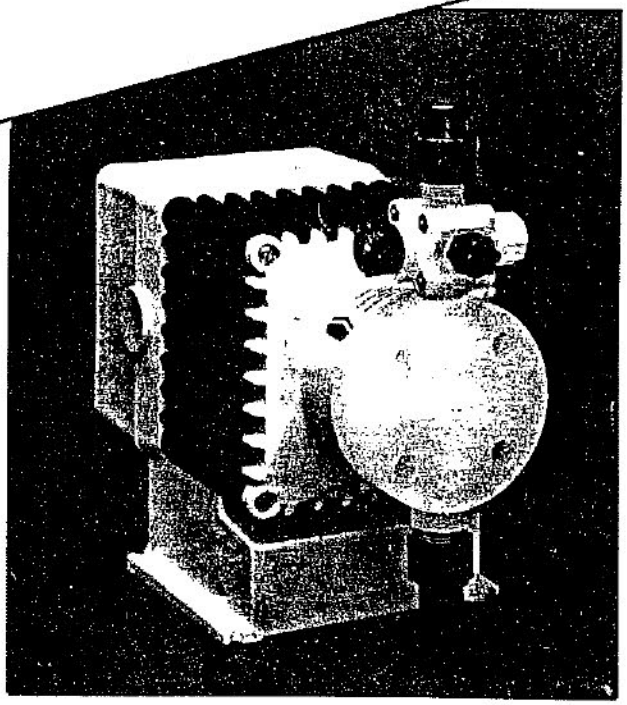

LMI's totally enclosed, corrosion resistant Series C Metering Pump

LMI
LIQUID METRONICS DIVISION
MILTON ROY

Catalog Sec. 1.2 pg. 9000
Replaces Rev B of 3/92
1417.C 3/92

LMI's Series B and C Metering Pumps

for accurate, dependable fluid metering

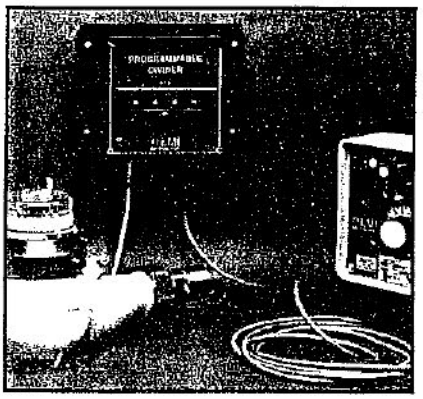

Series B7 Metering Pump with an LMI RFP Remote Programmable Flowmeter-Pulser for proportional fluid metering.

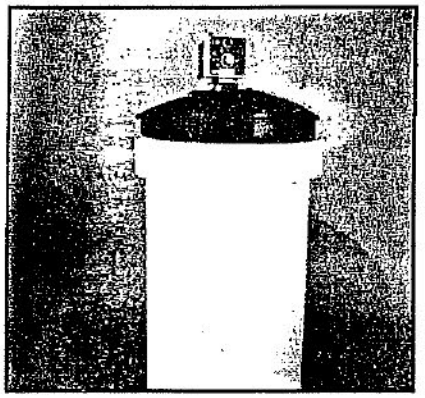

Series B Metering Pump mounted on an LMI 50 gallon ultra-violet resistant polyethylene solution tank.

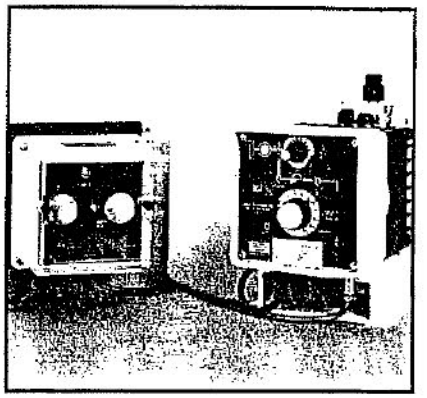

Series C7 Metering Pump with an LMI Liquitron® Current to Frequency Converter provides instrument responsive control.

In addition to a wide range of control options, LMI's Series B and C Metering Pumps offer these advantages:

ELECTROMAGNETICALLY DRIVEN

With only a single moving unit, the Liquifram® armature assembly. The EPU of the B and C Series eliminates the problems associated with motors and reduction gears.

TOTALLY ENCLOSED, CORROSION RESISTANT

Solid state encapsulated electronics provide unparalleled protection from moisture and corrosive atmospheres.

Housings of glass fiber reinforced polypropylene protect the pump from spilled chemical and corrosive atmospheres.

LOW MAINTENANCE

Only one moving unit, the armature- Liquifram® assembly means longer life than comparable motor driven units.

Requires no lubrication, minimizing the need for user maintenance.

Modular construction provides easy replacement of components and major assemblies, drastically reducing system down time.

LOCAL AVAILABILITY, LOCAL SERVICE

LMI's international network of stocking representatives can deliver your pump immediately from their extensive stock of LMI products.

INHERENT PRESSURE RELIEF

When the back pressure exceeds the strength of the magnetic force developed by the EPU, the Liquifram® will stop. This prevents any damage to the pump or your system.

LMI's UNIQUE FOUR FUNCTION VALVE - 4FV

Provides the following added protection:

1. Anti-Syphon Protection (automatic)
Prevents syphoning when pumping downhill or into a vacuum with little or no back pressure.

2. Back Pressure (automatic)
Provides approximately 25 psi (1.8 bar) back pressure to prevent overpumping when little or no back pressure is present.

3. Pressure Relief (automatic)
If discharge line is overpressurized, the valve opens sending the solution back to your supply tank.

4. Line Depressurization (manual)
By pulling both knobs, the discharge line will drain back to your supply tank.

Drive Asm.	Liquid End	Size Code	Materials of Construction				Acces-sory	Tubing & Connections
			Head/Fittings	Balls	Liquifram®	Seal Rings		
	111	3.0	Polypropylene	Ceramic	Fluorofilm®	Polyprel®		PE .5" O.D.Discharge Vinyl .5" O.D. Suction
	111S	3.0	Polypropylene	Ceramic	Fluorofilm®	Polyprel®	4FV	PE .5" O.D.Discharge Vinyl .5" O.D. Suction
	112	3.0	PVDF	Ceramic	Fluorofilm®	Polyprel®		PE .5" O.D.
	112S	3.0	PVDF	Ceramic	Fluorofilm®	Polyprel®	4FV	PE .5" O.D.
	118	3.0	PVC	Ceramic	Fluorofilm®	Polyprel®		PE .5" O.D.
	118S	3.0	PVC	Ceramic	Fluorofilm®	Polyprel®	4FV	PE .5" O.D.
B74□-	11	3.0	Acrylic/PVC	Ceramic	Teflon Face	Polyprel®		PE .5" O.D. Discharge Vinyl .5" O.D. Suction
B14□-	11S	3.0	Acrylic/PVC	Ceramic	Teflon Face	Polyprel®	4FV	PE .5" O.D. Discharge Vinyl .5" O.D. Suction
	12	3.0	PVC/PVDF	Ceramic	Teflon Face	Polyprel®		PE .5" O.D.
	12S	3.0	PVC/PVDF	Ceramic	Teflon Face	Polyprel®	4FV	PE .5" O.D.
	15	3.0	Polypropylene	Ceramic	Teflon Face	Teflon		PE .5" O.D.
	15S	3.0	Polypropylene	Ceramic	Teflon Face	Teflon	4FV	PE .5" O.D.
	29	3.0	UHMW PE	Ceramic	Teflon Face	Hypalon		PE .5" O.D.
	217+	3.0	316 S.S.	316 S.S.	Teflon Face	316 S.S.		Pipe 1/4" NPT M
	94	0.9	PVC	Ceramic	Teflon Face	Teflon		Pipe 1/4" NPT M
C70□-	94S	0.9	PVC	Ceramic	Teflon Face	Teflon	4FV	Pipe 1/4" NPT M
C10□-	297	0.9	316 S.S.	316 S.S.	Teflon Face	316 S.S.		Pipe 1/4" NPT M
	111	3.0	Polypropylene	Ceramic	Fluorofilm®	Polyprel®		PE .5" O.D.Discharge Vinyl .5" O.D. Suction
	111S	3.0	Polypropylene	Ceramic	Fluorofilm®	Polyprel®	4FV	PE .5" O.D.Discharge Vinyl .5" O.D. Suction
	112	3.0	PVDF	Ceramic	Fluorofilm®	Polyprel®		PE .5" O.D.
	112S	3.0	PVDF	Ceramic	Fluorofilm®	Polyprel®	4FV	PE .5" O.D.
	118	3.0	PVC	Ceramic	Fluorofilm®	Polyprel®		PE .5" O.D.
	118S	3.0	PVC	Ceramic	Fluorofilm®	Polyprel®	4FV	PE .5" O.D.
C73□-	20	3.0	Acrylic/PVC	Ceramic	Teflon Face	Hypalon		PE .5" O.D. Discharge Vinyl .5" O.D. Suction
C13□-	20HV	3.0	Acrylic/PP	316 S.S.	Teflon Face	Hypalon		PE .5" O.D. Discharge Vinyl .938" O.D. Suction
	20S	3.0	Acrylic/PVC	Ceramic	Teflon Face	Hypalon	4FV	PE .5" O.D. Discharge Vinyl .5" O.D. Suction
	24	3.0	PVC	Ceramic	Teflon Face	Teflon		Pipe 1/2" NPT M
	25HV	3.0	Polypropylene	316 S.S.	Teflon Face	Teflon		PE .5" O.D. Discharge Vinyl .938" O.D. Suction
	25P	3.0	Polypropylene	Ceramic	Teflon Face	Teflon		Pipe 1/2" NPT M
	25T	3.0	Polypropylene	Ceramic	Teflon Face	Teflon		PE .5" O.D.
	26	3.0	PVC	Ceramic	Teflon Face	Viton		PE .5" O.D.
	26S	3.0	PVC	Ceramic	Teflon Face	Viton	4FV	PE .5" O.D.
	217+	3.0	316 S.S.	316 S.S.	Teflon Face	316 S.S.		Pipe 1/4" NPT M
	27	3.0	316 S.S.	316 S.S.	Teflon Face	Teflon		Pipe 1/2" NPT M
	29	3.0	UHMW PE	Ceramic	Teflon Face	Hypalon		PE .5" O.D.

Drive Asm.	Liquid End	Size Code	Materials of Construction				Acces-sory	Tubing & Connections
			Head/Fittings	Balls	Liquifram®	Seat Rings		
	30	6.0	Acrylic/PVC	Ceramic	Teflon Face	Teflon		PE .5" O.D. Discharge Vinyl .5" O.D. Suction
	30S	6.0	Acrylic/PVC	Ceramic	Teflon Face	Teflon	4FV	PE .5" O.D. Discharge Vinyl .5" O.D. Suction
C74□-	34	6.0	PVC	Ceramic	Teflon Face	Teflon		Pipe 1/2" NPT M
	35P	6.0	Polypropylene	Ceramic	Teflon Face	Teflon		Pipe 1/2" NPT M
C14□-	35T	6.0	Polypropylene	Ceramic	Teflon Face	Teflon		PE .5" O.D.
	36	6.0	PVC	Ceramic	Teflon Face	Teflon		PE .5" O.D.
	36S	6.0	PVC	Ceramic	Teflon Face	Teflon	4FV	PE .5" O.D.
	37	6.0	316 S.S.	316 S.S.	Teflon Face	Teflon		Pipe 1/2" NPT M
	20	3.0	Acrylic/PVC	Ceramic	Teflon Face	Hypalon		PE .5" O.D. Discharge Vinyl .5" O.D. Suction
	20HV	3.0	Acrylic/PP	316 S.S.	Teflon Face	Hypalon		PE .5" O.D. Discharge Vinyl .938" O.D. Suction
	20S	3.0	Acrylic/PVC	Ceramic	Teflon Face	Hypalon	4FV	PE .5" O.D. Discharge Vinyl .5" O.D. Suction
C77□-	24	3.0	PVC	Ceramic	Teflon Face	Teflon		Pipe 1/2" NPT M
	25HV	3.0	Polypropylene	316 S.S.	Teflon Face	Teflon		PE .5" O.D. Discharge Vinyl .938" O.D. Suction
	25P	3.0	Polypropylene	Ceramic	Teflon Face	Teflon		Pipe 1/2" NPT M
	25T	3.0	Polypropylene	Ceramic	Teflon Face	Teflon		PE .5" O.D.
	26	3.0	PVC	Ceramic	Teflon Face	Viton		PE .5" O.D.
	26S	3.0	PVC	Ceramic	Teflon Face	Viton	4FV	PE .5" O.D.
	217+	3.0	316 S.S.	316 S.S.	Teflon Face	316 S.S.		Pipe 1/4" NPT M
	27	3.0	316 S.S.	316 S.S.	Teflon Face	Teflon		Pipe 1/2" NPT M
	29	3.0	UHMW PE	Ceramic	Teflon Face	Hypalon		PE .5" O.D.
	30	6.0	Acrylic/PVC	Ceramic	Teflon Face	Teflon		PE .5" O.D. Discharge Vinyl .5" O.D. Suction
	30S	6.0	Acrylic/PVC	Ceramic	Teflon Face	Teflon	4FV	PE .5" O.D. Discharge Vinyl .5" O.D. Suction
C78□-	34	6.0	PVC	Ceramic	Teflon Face	Teflon		Pipe 1/2" NPT M
	35P	6.0	Polypropylene	Ceramic	Teflon Face	Teflon		Pipe 1/2" NPT M
	35T	6.0	Polypropylene	Ceramic	Teflon Face	Teflon		PE .5" O.D.
	36	6.0	PVC	Ceramic	Teflon Face	Teflon		PE .5" O.D.
	36S	6.0	PVC	Ceramic	Teflon Face	Teflon	4FV	PE .5" O.D.
	37	6.0	316 S.S.	316 S.S.	Teflon Face	Teflon		Pipe 1/2" NPT M

+ Use of this Liquid End may restrict your pumps capacity when pumping higher viscosity and higher density solutions. Please consult the factory or your local LMI representative with application questions.

4FV -indicates that pump is equipped with an LMI Four Function Valve. This diaphragm type anti-syphon/ pressure relief valve is installed on the pump head. It provides anti-syphon protection and aids in priming, even under pressure.

Fluorofilm® is a copolymer of tetrafluoroethylene and perfluoroalkoxy.
Polyprel® is a copolymer of tetrafluoroethylene and propylene.
Both are registered tradenames of LMI.

2. OUTPUT SPECIFICATIONS

MODEL	Gallons per Hour		Liters per Hour		ML/CC/MIN		ML/CC/Stroke		MAX INJPRESS	
	MIN	MAX	MIN	MAX	MIN	MAX	MIN	MAX	PSI	BAR
B71, B11	0.008	1.6	0.030	6.0	0.50	101	0.10	1.00	150	10.3
B72, B12	0.012	2.5	0.047	9.5	0.79	157	0.16	1.57	100	6.9
B73, B13	0.022	4.5	0.085	17.0	1.42	284	0.28	2.84	50	3.5
B74, B14	0.040	7.0	0.132	26.5	2.21	442	0.44	4.42	30	2.1
C70, C10	0.011	1.3	0.024	4.9	0.41	82	0.08	0.82	300	20.7
C71, C11	0.012	2.5	0.047	9.5	0.79	158	0.16	1.58	150	10.3
C72, C12	0.020	4.0	0.760	15.2	1.26	252	0.25	2.52	100	6.9
C73, C13	0.040	9.0	0.170	34.0	2.84	568	0.57	5.68	60	4.1
C74, C14	0.100	20.0	0.380	76.0	6.31	1262	1.26	12.62	25	1.7
HIGH PERFORMANCE SUPER C SERIES										
C77	0.050	10.0	0.190	38.0	3.15	631	0.63	6.31	80	5.5
C78	0.130	25.0	0.475	95.0	7.88	1577	1.58	15.77	30	2.1

MODEL	B71, B72, B73, B74, B11, B12, B13, B14,	C70, C71, C72, C73, C74 C10, C11, C12, C13, C14	C77, C78
Stroke Length	Adjustable, 0-100%		
Recommended Min.	10%; 15% for B71, B11		
Speed *Strokes per Minute*	B7, C7: 0 - 100 in EXTERNAL Mode, 5 - 100 in INTERNAL Mode B1, C1: 5 - 100		
Max Current *Amps* *@ 120VAC*	1.5	3.5	6.3
@ 220-240 VAC	.75	1.7	3.2
Average Input Power *Watts*	29	56	87
Peak Input Power *Watts*	248	420	650
Pump Weight	14 lbs (6.4 Kg)	18 lbs (8.2 Kg)	26 lbs (11.8 Kg)
Shipping Weight	15 lbs (6.9 Kg)	19 lbs (8.7 Kg)	28 lbs (12.7 Kg)

3. VOLTAGE CODES

□the number which appears just before the hyphen in each complete pump model number designates both voltage and power cord/plug type. When ordering, please indicate desired option by inserting one of the following numbers in the position just before the hyphen:

1 - 120V AC
2 - 240V AC, USA only
3 - 220-240V AC, DIN Plug
5 - 240-250V AC, UK Plug
6 - 240-250V AC, Aust./NZ Plug
7 - 220V AC, Swiss Plug

4. CHOOSE A LIQUID END COMPATIBLE WITH YOUR SOLUTION

Drive Asm.	Liquid End	Size Code	Materials of Construction				Acces-sory	Tubing & Connections
			Head/Fittings	Balls	Liquifram®	Seal Rings		
	191	0.9	Polypropylene	Ceramic	Fluorofilm®	Polyprel®		PE .375" O.D.
	191S	0.9	Polypropylene	Ceramic	Fluorofilm®	Polyprel®	4FV	PE .375" O.D.
	192	0.9	PVDF	Ceramic	Fluorofilm®	Polyprel®		PE .375" O.D.
	192S	0.9	PVDF	Ceramic	Fluorofilm®	Polyprel®	4FV	PE .375" O.D.
	198	0.9	PVC	Ceramic	Fluorofilm®	Polyprel®		PE .375" O.D.
	198S	0.9	PVC	Ceramic	Fluorofilm®	Polyprel®	4FV	PE .375" O.D.
	85HV	0.9	Polypropylene	316 S.S.	Teflon Face	Teflon		PE .5" O.D. Discharge Vinyl .938" O.D. Suction
	86	0.9	Acrylic	316 S.S.	Teflon Face	Hypalon		PE .5" O.D. Discharge Vinyl .938" O.D. Suction
B71□-	89	0.9	UHMW PE	Ceramic	Hypalon	Hypalon		PE .5" O.D.
B72□-	91FS	0.9	Acrylic/PVDF	Teflon	Hypalon	Hypalon	4FV	PE .375" O.D. Discharge Vinyl .375" O.D. Suction
B11□-	91S	0.9	Acrylic/PVC	Ceramic	Teflon Face	Teflon	4FV	PE .375" O.D. Discharge Vinyl .375" O.D. Suction
B12□-	91T	0.9	Acrylic/PVC	Ceramic	Teflon Face	Teflon		PE .375" O.D. Discharge Vinyl .375" O.D. Suction
	92S	0.9	PVC	Ceramic	Teflon Face	Teflon	4FV	PE .375" O.D.
	92T	0.9	PVC	Ceramic	Teflon Face	Teflon		PE .375" O.D.
	94	0.9	PVC	Ceramic	Teflon Face	Teflon		Pipe 1/4" NPT M
	94S	0.9	PVC	Ceramic	Teflon Face	Teflon	4FV	Pipe 1/4" NPT M
	95S	0.9	Polypropylene	Ceramic	Teflon Face	Teflon	4FV	PE .375" O.D.
	95T	0.9	Polypropylene	Ceramic	Teflon Face	Teflon		PE .375" O.D.
	297	0.9	316 S.S.	316 S.S.	Teflon Face	316 S.S.		Pipe 1/4" NPT M
	161	1.8	Polypropylene	Ceramic	Fluorofilm®	Polyprel®		PE .375" O.D. Discharge Vinyl .375" O.D. Suction
	161S	1.8	Polypropylene	Ceramic	Fluorofilm®	Polyprel®	4FV	PE .375" O.D. Discharge Vinyl .375" O.D. Suction
	162	1.8	PVDF	Ceramic	Fluorofilm®	Polyprel®		PE .375" O.D.
	162S	1.8	PVDF	Ceramic	Fluorofilm®	Polyprel®	4FV	PE .375" O.D.
	168	1.8	PVC	Ceramic	Fluorofilm®	Polyprel®		PE .375" O.D.
	168S	1.8	PVC	Ceramic	Fluorofilm®	Polyprel®	4FV	PE .375" O.D.
B73□-	71FS	1.8	Acrylic/PVDF	Teflon	Hypalon	Hypalon	4FV	PE .5" O.D. Discharge Vinyl .5" O.D. Suction
B13□-	71S	1.8	Acrylic/PVC	Ceramic	Teflon Face	Teflon	4FV	PE .5" O.D. Discharge Vinyl .5" O.D. Suction
C71□-	71T	1.8	Acrylic/PVC	Ceramic	Teflon Face	Teflon		PE .5" O.D. Discharge Vinyl .5" O.D. Suction
C72□-	72S	1.8	PVC	Ceramic	Teflon Face	Teflon	4FV	PE .5" O.D.
	72T	1.8	PVC	Ceramic	Teflon Face	Teflon		PE .5" O.D.
C11□-	74	1.8	PVC	Ceramic	Teflon Face	Teflon		Pipe 1/4" NPT M
	74S	1.8	PVC	Ceramic	Teflon Face	Teflon	4FV	Pipe 1/4" NPT M
C12□-	75HV	1.8	Polypropylene	316 S.S.	Teflon Face	Teflon		PE .5" O.D. Discharge Vinyl .938" O.D. Suction
	75S	1.8	Polypropylene	Ceramic	Teflon Face	Teflon	4FV	PE .5" O.D.
	75T	1.8	Polypropylene	Ceramic	Teflon Face	Teflon		PE .5" O.D.
	76	1.8	Acrylic/PP	316 S.S.	Teflon Face	Hypalon		PE .5" O.D. Discharge Vinyl .938" O.D. Suction
	277	1.8	316 S.S.	316 S.S.	Teflon Face	316 S.S.		Pipe 1/4" NPT M
	79	1.8	UHMW PE	Ceramic	Hypalon	Hypalon		PE .5" O.D. Discharge

DIMENSIONS

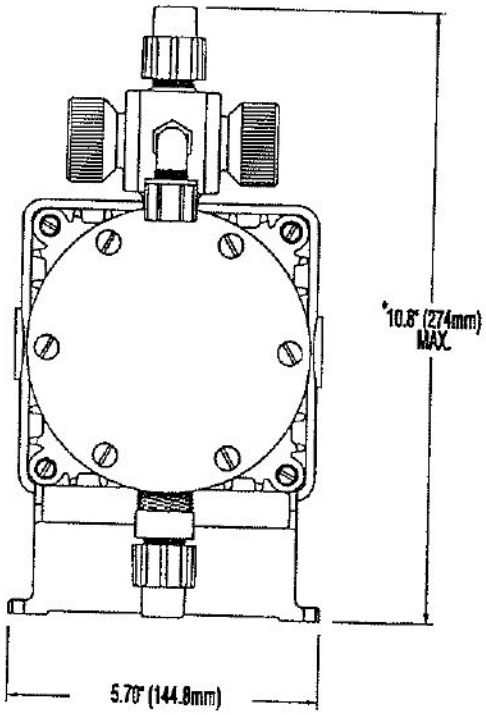

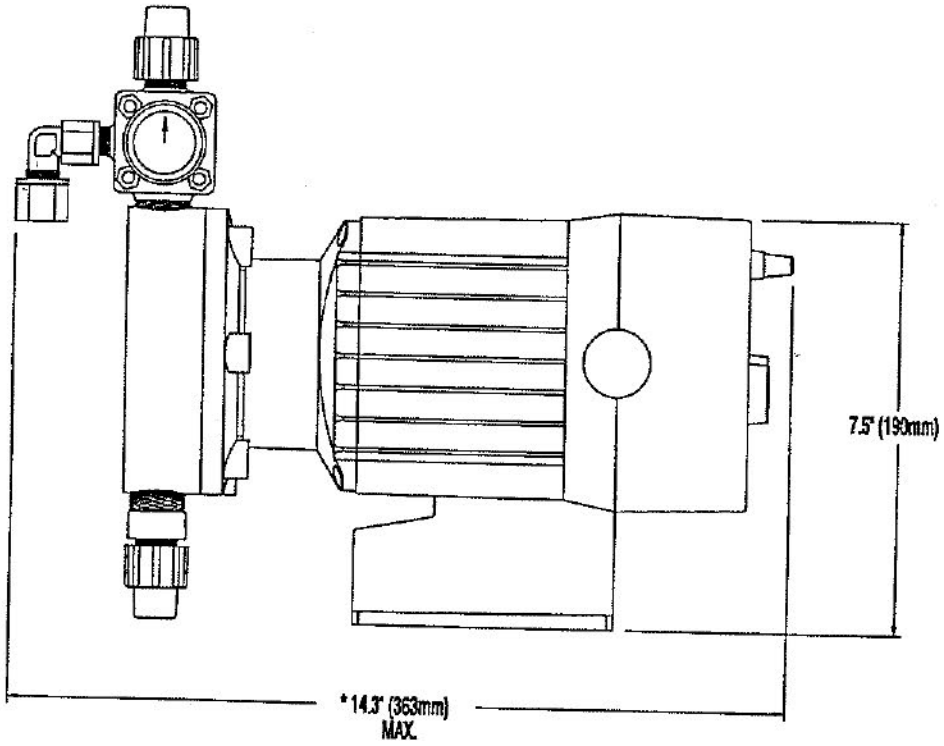

*Dimensions shown are maximum for largest Liquid End available. These dimensions vary depending on the Liquid End Selected.

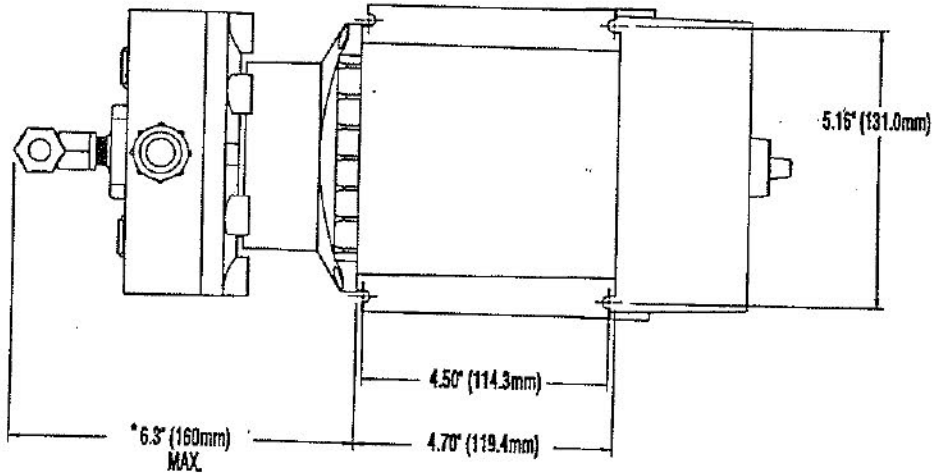

LIQUID METRONICS DIVISION, MILTON ROY
19 Craig Road, Acton, MA 01720-5495 • TEL (508) 263-9800 • TLX 95-1781 • FAX (508) 264-9172

Printed in U.S.A.

All prices quoted FOB Acton, MA.
Prices and specifications subject to change without notice.

SELECTING YOUR LMI METERING PUMP

LMI metering pumps are made by combining two major components: the drive assembly, which provides the power for the pumping action, and the liquid end, which is the area through which the pumped solution flows.

To arrive at the complete model number for your Series B or C metering pump, combine the drive assembly number and the liquid end required. The combination of these two numbers results in your complete pump model number.

example:

B 7 1 1 - 1 9 1 S

Drive Assembly No. — Liquid End No.

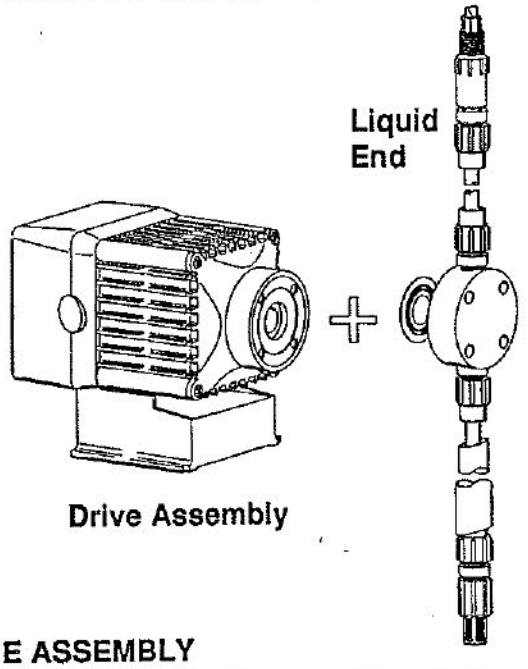

SELECTING THE DRIVE ASSEMBLY

To choose the correct combination for your application, begin by selecting the drive assembly with the control option, voltage code, output and pressure specifications to match your requirements. Listed below and on the following pages are the available control options, voltage codes and output specifications for Series B and C metering pumps.

1. CONTROL OPTIONS

AUTOMATIC CONTROL - Series B7 and C7

These pumps respond to any dry switch closure, providing automatic speed control and proportional feeding. A mode switch allows you to choose this automatic speed control or dual manual control. When you need sophisticated system integration or state of the art electronic pump control, these LMI Metering Pumps offer the following:

Adjustable Electronic Pressure Control
Provides the adjustment of the pump's pressure capability and power consumption, reducing heat, pipe shock and pulsation, while increasing pump life.

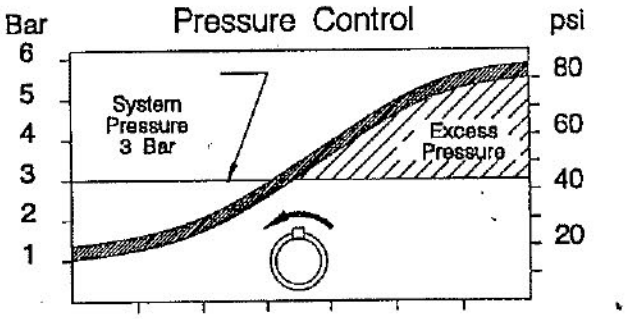

Flow Proportional Metering
is possible using LMI's RFP and FC Series' of flowmeters.

Instrument Responsive Metering
is possible using LMI's Micropace® Metering Pump Controls. The MP-100 Analog to Digital Converter allows you to pace your LMI pump directly from a 4-20 mA signal. Switch closure triggering may be multiplied with the MP-500M Micropace® Multiplier, or divided with the MP-400 Micropace® Divider, giving you complete control with either high or low speed switch closure triggering. Series B7 and C7 metering pumps can also be driven by any of the LMI Liquitron® Series of Pump Controls.

DUAL MANUAL CONTROL -Series B1 and C1

These pumps offer the versatility of independently adjustable stroke length and speed, allowing dual manual control of pump output.

2 WAY PILOT OPERATED
General Service Solenoid Valves

Brass or Stainless Steel Bodies • 3/8" to 2½" N.P.T.

ASCO Red-Hat • Red-Hat II 8210 SERIES

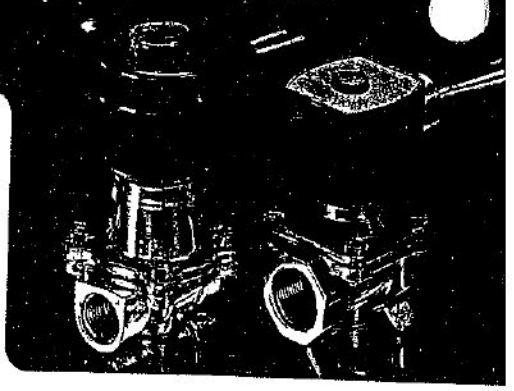

Specifications

Solenoid Enclosures: Valves listed in this series have either Red-Hat metal solenoid enclosures or Red-Hat II molded epoxy solenoids. Red-Hat II valves are identified by the change letter "G" in their catalog numbers, e.g., 8210G4, and are shown in red.

Standard Enclosures:
Red-Hat — Type 1 General Purpose

Red-Hat II — Types 1, 2, 3, 3S, 4 and 4X Combination General Purpose and Watertight.

Optional Enclosures:
Red-Hat — Types 3, 7 and 9 Combination Explosionproof and Raintight. To order, add prefix "EF" to catalog number. (Except Catalog Numbers 8210B57, 8210B58 and 8210B59)④

Red-Hat II — Types 3, 3S, 4, 4X, 6, 6P, 7 and 9 Combination Explosionproof and Watertight. To order, add prefix "EF" to catalog number.

Additional constructions are available. The Optional Electrical Features Section, page 11, contains descriptions and ordering information for: Open Frame Solenoids • Junction Box Enclosures • Panel Mount Constructions.

Electrical: Standard Voltages:
24, 120, 240, 480 volts, AC, 60 Hz (or 110, 220 volts, AC, 50 Hz)

6, 12, 24, 120, 240 volts, DC

Other voltages are available when required.

Coil: Continuous duty molded Class F or H, as listed.

Nominal Ambient Temperature Ranges: Red-Hat and Red-Hat II Valves/AC Construction: 32°F to 125°F.

Red-Hat Valves/DC Construction: 32°F to 77°F (104°F occasionally).

Red-Hat II Valves/DC Construction: 32°F to 104°F.

Refer to Engineering Section for details.

Valve Parts in Contact with Fluids:
Body — Brass or Stainless Steel, as listed
Seals and Discs — Buna "N" or Teflon*, as listed
Disc Holder — Nylon, as listed
Core Tube — 305 s.s.
Core and Plugnut — 430F s.s.
Springs — 302 s.s.
Shading Coil — Copper (brass body); Silver (stainless steel body)

Approvals: CSA certified. UL listed as indicated. Refer to Engineering Section for details.

Ordering Information:
Important: We must have catalog number, voltage and Hertz, operating pressure and fluid handled. Use strainers with solenoid valves.

*DuPont Co. trademark

SPECIFICATIONS

Pipe Size (ins.)	Orifice Size (ins.)	Cv Flow Factor	Operating Pressure Differential (psi) Min.	Max. AC Air-Inert Gas	Max. AC Water	Max. AC Light Oil @ 300 SSU	Max. DC Air-Inert Gas	Max. DC Water	Max. DC Light Oil @ 300 SSU	Max. Fluid Temp.°F. AC	Max. Fluid Temp.°F. DC	Standard Solenoid Enclosures Red-Hat–Type 1 Red-Hat II–Types 1,2,3,3S,4 and 4X — Brass Body: Catalog Number	Brass Body: Constr. Ref. No. ④	Brass Body: UL Listing	S.S. Body: Catalog Number	S.S. Body: Constr. Ref. No. ④	S.S. Body: UL Listing	Watt Rating/ Class of Coil Insulation ⑦ AC	Watt Rating/ Class of Coil Insulation ⑦ DC
NORMALLY CLOSED (Closed when de-energized), Buna "N" or Teflon② Seating																			
3/8	3/8	1.5	①	150	125	—	40	40	—	180	150	8210G73③	1P	•	8210G36③	1P	•	6.1/F	11.6/F
3/8	5/8	3	0	150	150	—	40	40	—	180	150	8210G93	5D	o	—	—	—	10.1/F	11.6/F
3/8	5/8	3	5	200	150	135	125	100	100	180	150	8210G1	6D	o	—	—	—	6.1/F	11.6/F
3/8	5/8	3	5	300	300	300	—	—	—	175	—	8210G6	5D	o	—	—	—	17.1/F	—
1/2	7/16	2.2	①	150	125	—	40	40	—	180	150	8210G15③	2P	•	8210G37③	2P	•	6.1/F	11.6/F
1/2	5/8	4	0	150	150	—	40	40	—	180	150	8210G94	5D	o	—	—	—	10.1/F	11.6/F
1/2	5/8	4	0	150	150	125	40	40	—	175	150	—	—	—	8210G87	7D	•	17.1/F	11.6/F
1/2	5/8	4	5	200	150	135	125	100	100	180	150	8210G2	6D	o	—	—	—	6.1/F	11.6/F
1/2	5/8	4	5	300	300	300	—	—	—	175	—	8210G7	5D	o	—	—	—	17.1/F	—
3/4	5/8	5	0	150	150	125	40	40	—	175	150	—	—	—	8210G88	7D	•	17.1/F	11.6/F
3/4	3/4	5	5	125	125	125	100	90	75	180	150	8210G9	9D	o	—	—	—	6.1/F	11.6/F
3/4	3/4	5	0	150	150	—	40	40	—	180	150	8210G95	8D	o	—	—	—	10.1/F	11.6/F
3/4	3/4	6.5	5	250	150	100	125	125	125	180	150	8210G3	11D	o	—	—	—	6.1/F	11.6/F
3/4	3/4	6	0	350	300	200	200	180	180	200	77	8210B26②	10P	⑤	—	—	—	15.4/F	30.6/H
1	1	13	0	150	125	125	100	100	80	180	77	8210B54	31D	⑤	8210D89	15D	⑤	15.4/F	30.6/H
1	1	13	5	150	150	100	125	125	125	180	150	8210G4	12D	o	—	—	—	6.1/F	11.6/F
1	1	13.5	0	300	225	115	—	—	—	200	—	8210B27	14P	•	—	—	—	20/F	—
1¼	1⅛	15	0	150	125	125	100	100	80	180	77	8210B55	32D	⑤	—	—	—	15.4/F	30.6/
1¼	1⅛	15	5	150	150	100	125	125	125	180	150	8210G8	16D	o	—	—	—	6.1/F	11.6
1½	1¼	22.5	0	150	125	125	100	100	80	180	77	8210B56	33D	⑤	—	—	—	15.4/F	30.6/H
1½	1¼	22.5	5	150	150	100	125	125	125	180	150	8210G22	18D	•	—	—	—	6.1/F	11.6/F
2	1¾	43	5	150	125	90	50	50	50	180	150	8210G100	20P	—	—	—	—	6.1/F	11.6/F
2½	1¾	45	5	150	125	90	50	50	50	180	150	8210G101	21P	—	—	—	—	6.1/F	11.6/F

BELL & GOSSETT

Bulletin A-508

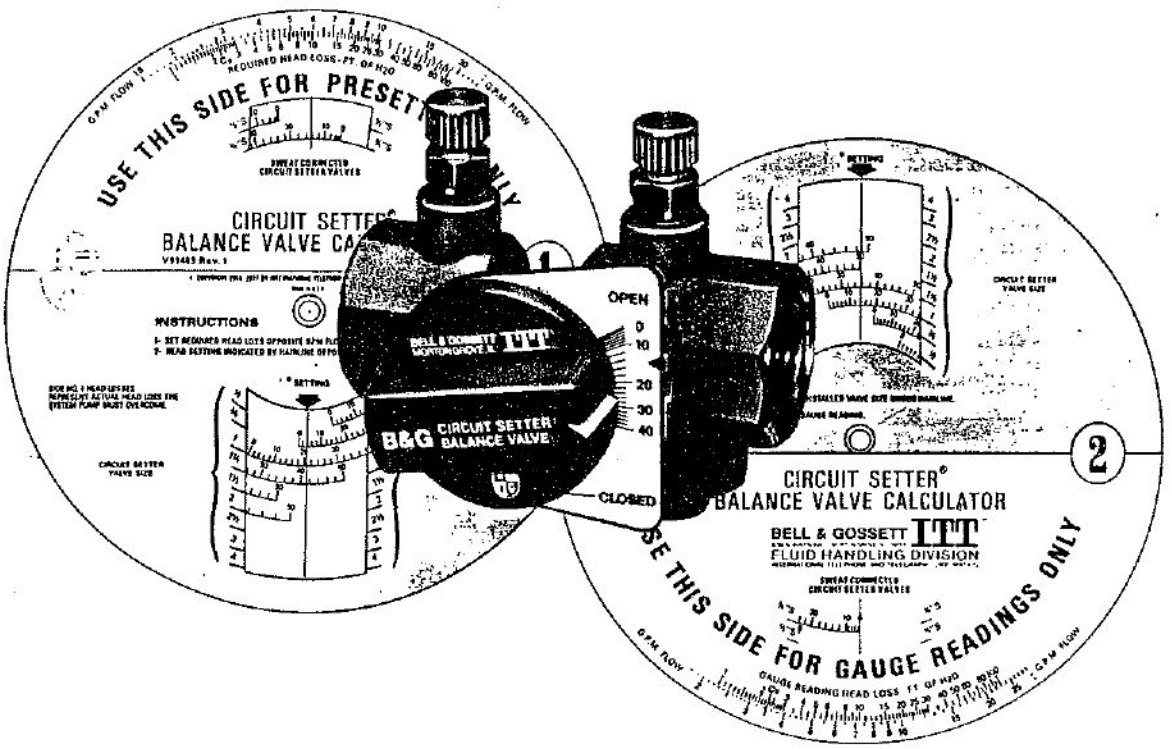

Circuit Setter® Plus

CALIBRATED BALANCE VALVE

FEATURES ACCURATE FLUID FLOW CONTROL

PLUS PRE-BALANCE DESIGN CAPABILITY
PLUS POSITIVE SHUT OFF
PLUS MEMORY STOP INDICATOR
PLUS DRAIN OR PURGE CONNECTION
PLUS INTEGRAL VALVED READOUT PORTS
PLUS MOLDED INSULATION

OFFERS THE ULTIMATE ANSWER TO SYSTEM BALANCE PROBLEMS.

BELL & GOSSETT ITT
FLUID HANDLING DIVISION

©COPYRIGHT 1985 BY ITT CORPORATION

NEW Circuit Setter Plus

CALIBRATED BALANCE VALVES

The new CIRCUIT SETTER PLUS calibrated balance valve is designed specifically for pre-set proportional system balance. This system balance method, developed by B&G, assures optimum system flow balance at minimum pump operating horsepower. Terminal unit balance valves can be simply pre-set using the B&G Circuit Setter Calculator and the system piping plan. With this procedure, system balance and start-up time is reduced dramatically. Pump impeller trim after system balance will reduce system horsepower and operating costs to minimum levels.

ACCURATE REPEATABLE PERFORMANCE

- PROPORTIONAL BALANCE
  Eliminates out-dated read and set balance procedures
- POSITIVE SHUT-OFF
  For terminal unit isolation and service
- MEMORY STOP
  Allows complete shut-off and return to set position without readjustment
- DRAIN CONNECTION
  Permits draining of terminal units without draining circuit piping
- READOUT VALVES
  To facilitate differential pressure readings
- PRE-INSULATED
  Eliminates costly on-site insulating; provides easy access

Quality manufacturing and materials provide leak-tight construction and repeatable performance in every valve. The precision machined brass ball is backed up with 20% glass and carbon filled TFE seat rings. Valve seats do not distort with extended use. Permanent valve accuracy is assured.

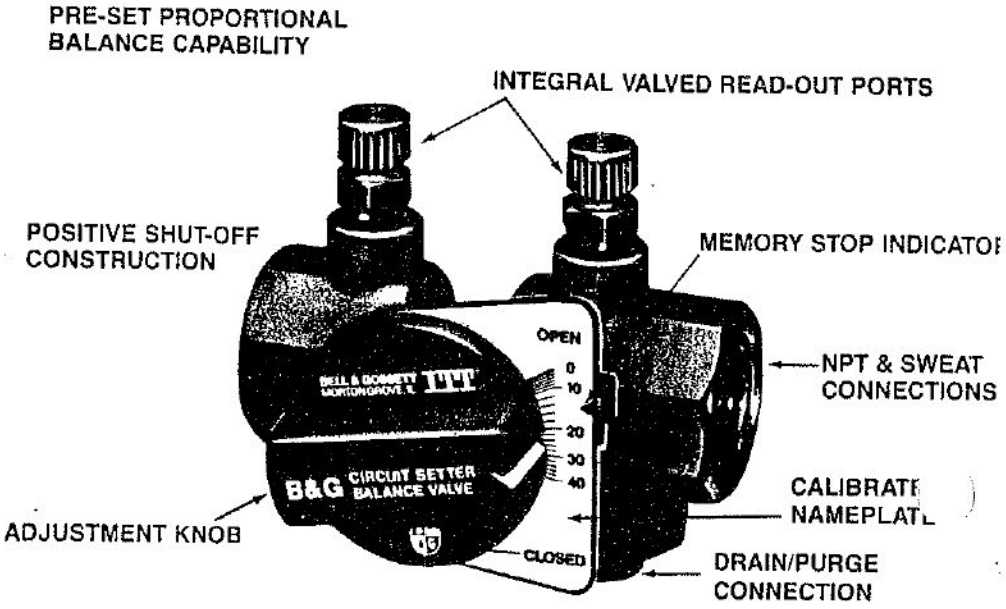

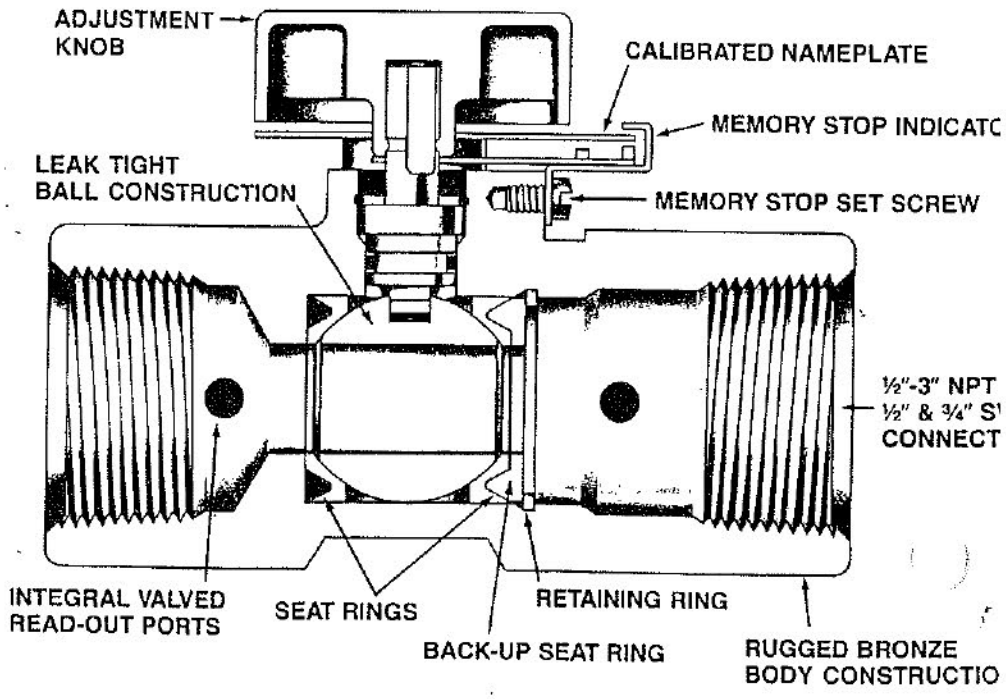

NOTE: ALL MODELS INCLUDE MOLDED INSULATION

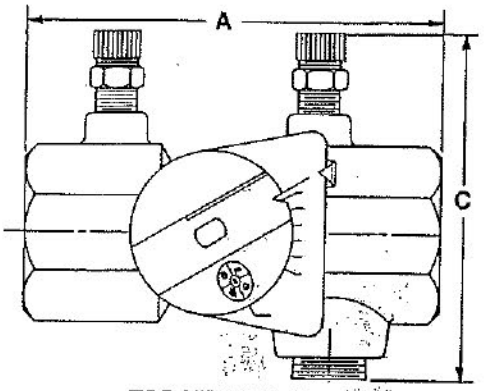

TOP VIEW ½"-3"

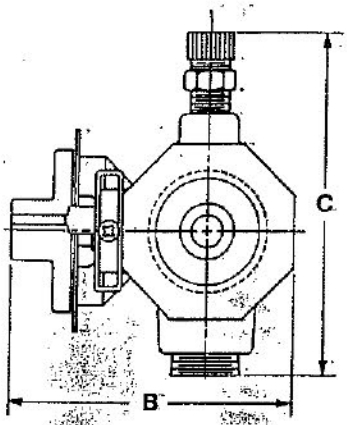

END VIEW ½"-1"

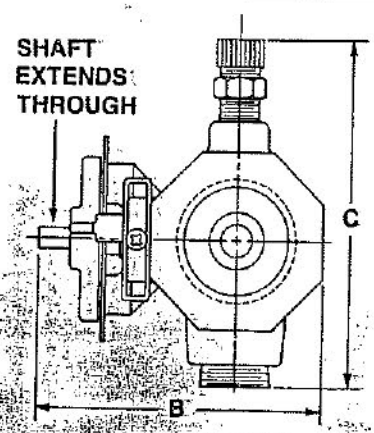

END VIEW 1¼"-3"

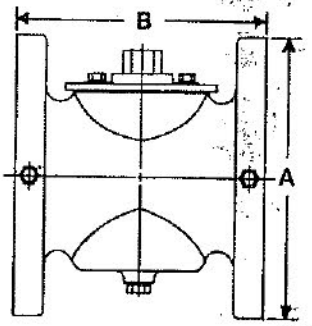

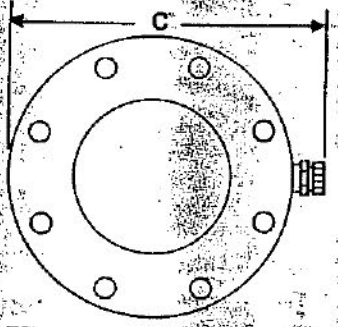

4" FLANGED

NOTE:
Bell & Gossett Circuit Setter Balance Valves are not recommended for use with readout connections pointing down.
Sizes ½"-3" are designed for positive shut-off and service. 4" flanged model is to be used for balancing only; it is not designed for positive shut-off or service.

Model No.	Size	Conns.	DIMENSIONS IN INCHES A Normal	A Insul.	B Normal	B Insul.	C Normal	C Insul.	Weight In Pounds
CB-½S	½	SWEAT	2 15/16	4 5/8	2 1/8	3 5/8	2 9/16	6 1/8	1
CB-¾S	¾		3 1/2	4 5/8	2 1/4	3 5/8	2 3/4	6 1/8	1 1/4
CB-½	½	NPT	2 15/16	4 5/8	2 3/16	3 5/8	2 3/4	6 1/8	1 1/2
CB-¾	¾		3 1/16	4 5/8	2 3/8	3 5/8	2 15/16	6 1/8	1 1/2
CB-1	1		3 13/16	4 5/8	2 11/16	3 5/8	3 3/16	6 1/8	2
CB-1¼	1¼		4 3/8	5 1/8	3 1/2	4 3/4	3 1/2	6 5/8	3 1/2
CB-1½	1½		4 7/16	5 1/8	3 11/16	4 3/4	3 13/16	6 5/8	4
CB-2	2		5 1/8	5 7/8	4 1/4	5 5/16	4 1/4	7 1/4	5
CB-2½	2½		6	7 1/4	4 3/4	6 1/2	4 11/16	8 1/2	9 1/2
CB-3	3		6 1/2	7 1/4	5 7/16	6 1/2	5 5/16	8 1/2	14 1/2
CB-4	4	FLGD.	8	8	9	10	10 1/8	10 1/8	51

Typical Specification

Furnish and install as shown on plans and with manufacturers recommendations Model CB calibrated balance valves.

Pre-Set Balance Feature. Valves to be designed to allow installing contractor to pre-set balance points for proportional system balance prior to system start-up in accordance with pre-set balance schedule.

Valve Design and Construction. All valves ½" to 3" pipe size to be of bronze body/brass ball construction with glass and carbon filled TFE seat rings. Valves to have differential pressure read-out ports across valve seat area. Read-out ports to be fitted with internal EPT inserts and check valves. Valve bodies to have ¼" NPT tapped drain/purge port. Valves to have memory stop feature to allow valve to be closed for service and then reopened to set point without disturbing balance position. All valves to have calibrated name plates to assure specific valve settings. Valves to be leak tight at full rated working pressure.

Valves 4" pipe size to be of cast iron body/brass vane construction with differential pressure read-out ports and valves as above.

Preformed Insulation. All valves to be provided with molded insulation to permit access for balance and read-out.

Design Pressure/Temperature

A. ½" - 3" NPT connections 300 psig at 250°F
B. ½" and ¾" Sweat connections 200 psig at 250°F
C. 4" flanged connections 125 psig at 250°F.

All balance valves to be ITT Bell and Gossett Model CB-_____(note sizes)

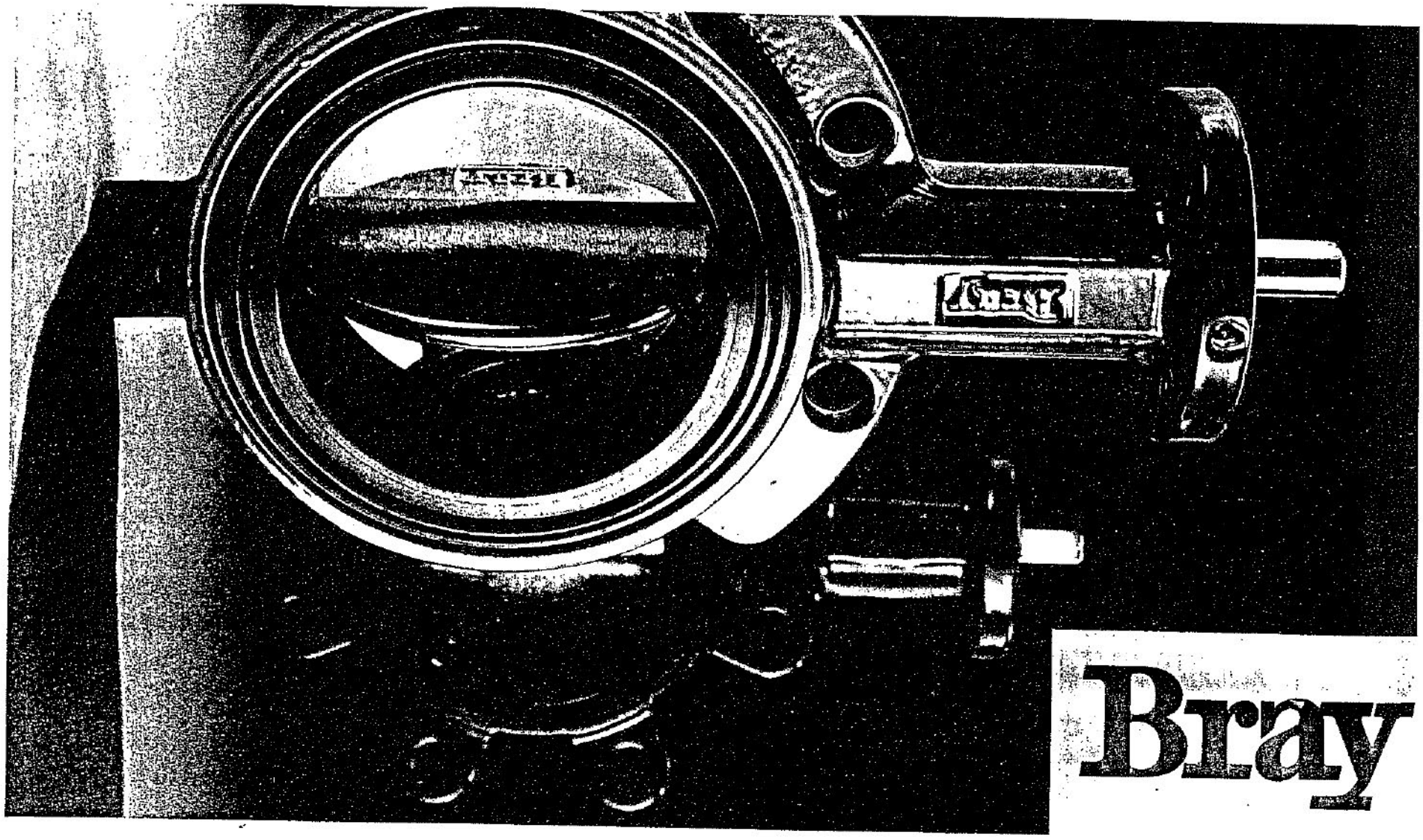

Bray

The High Performance Company

BUTTERFL[illegible] VALVES

SERIES 30/31 [illegible]fer/Lug

SERIES 30

2"–20" (50mm–500mm)

Bray Valve & Controls is proud to offer a new line of high quality butterfly valves to meet the requirements of today's market. Combining years of field application experience, research and development, Bray has designed many unique features in the Series 30/31 not previously available. The results are longer service life, greater reliability, ease of parts replacement and interchangeability of components.

DISC AND STEM CONNECTION

(A) Features a high-strength through stem design. The close tolerance, double "D" connection that drives the valve disc is an exclusive feature of the Bray valve. It eliminates stem retention components being exposed to the line media, such as disc screws and taper pins, which commonly result in leak paths, corrosion, and vibration failures. Disc screws or taper pins, due to wear

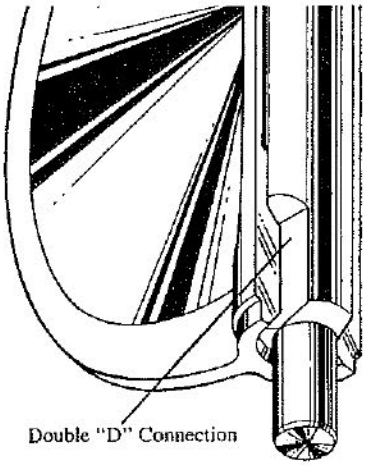

Double "D" Connection

and corrosion, often require difficult machining for disassembly. Disassembly of the Bray stem is just a matter of pulling the stem out of the disc. Without fasteners obstructing the line flow, the Series 30/31 C_V values are higher than many other valves, turbulence is reduced, and pressure recovery is increased. The stem ends are standardized for interchangeability with Bray actuators.

DISC (B) Casting is spherically machined, hand polished to provide a bubble-tight shut off, minimum torque, and longer seat life. The disc O.D. clearance is designed to work with all standard piping.

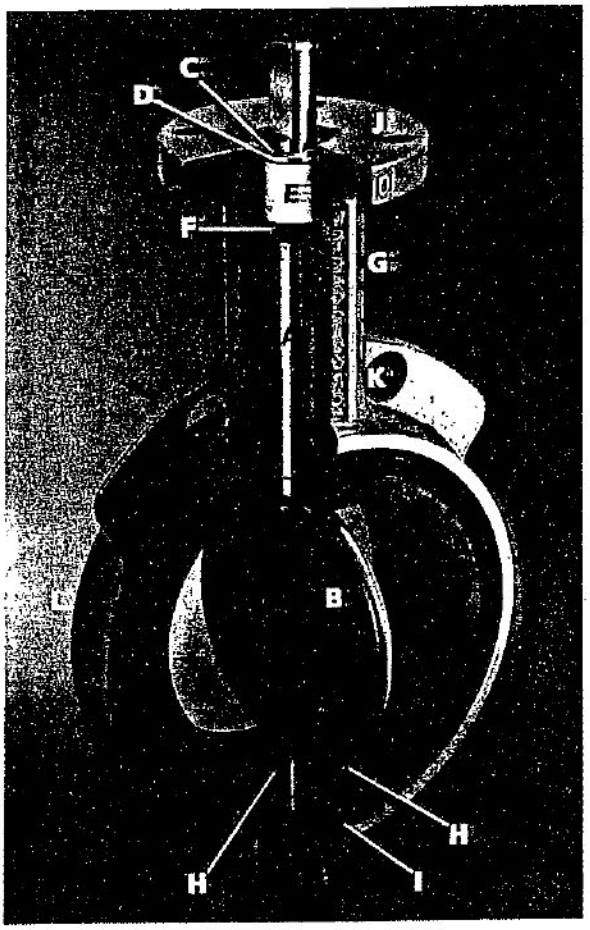

"SPIROLOX®" RETAINING RING* (C)

The stem is retained in the body by means of a unique Stainless Steel "Spirolox®" retaining ring. With a standard hand tool, the retaining ring may be removed for easy disassembly. The ring also prevents unintentional removal of stem during field service.

STEM RETAINING C-RINGS (D)

Manufactured from bronze material.

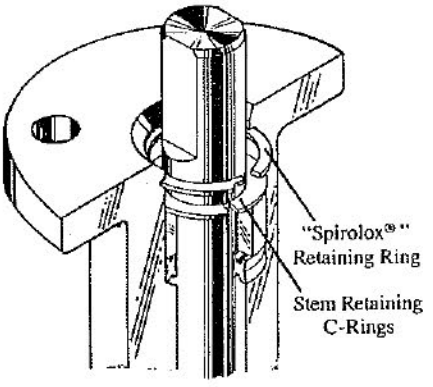

*"Spirolox®" designation is a registered trademark of TRW, Inc.

STEM BUSHING (E)

Non-corrosive, heavy duty acetal bushing absorbs actuator side thrusts.

STEM SEAL (F)

Double "U" cup seal design is self-adjusting and gives positive sealing in both directions. Prevents external substances from entering stem bore.

NECK (G) Extended neck length allows for 2" of piping insulation and is easily accessible for mounting actuators.

PRIMARY AND SECONDARY SEALS (H)

The Primary Seal is achieved by an interference fit of the unique molded seat flat with the disc hub. The secondary seal is an interference fit because the stem diameter is greater than the seat's stem hole diameter. These seals prevent line media from coming in contact with the stem or body.

BRAY UNIQUE SEAT DESIGN (I)

One of the valve's key elements is Bray's unique "tongue and groove" seat design. This resilient seat features lower torque than many valves on the market today and provides complete isolation of flowing media from the body by a totally encasing design. The tongue-and-groove seat to body retention method is superior to many traditional designs, making field replacement simple and fast. The seat is specifically designed to seal with slip-on or weld-neck flanges. The seat features a molded o-ring which

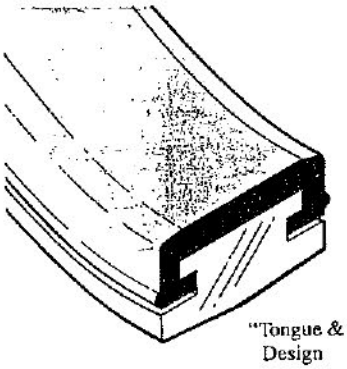

"Tongue & Groove" Design

eliminates the requirement of flange gaskets. It is important to point out all resilient seats for Bray butterfly valves Series 20, 21, 30, 31, 34 are completely interchangeable.

ACTUATOR MOUNTING FLANGE AND STEM CONNECTION (J)
Universally designed to ISO 5211 for direct mounting of Bray power actuators and manual operators.

FLANGE LOCATING HOLES (K)
Provides quick and proper alignment during installation.

BODY (L) One-piece wafer or lug style. Epoxy coating for excellent corrosion resistance. All bodies meet ANSI 150 pressure ratings for hydrostatic requirements.

DESIGN FEATURES

Bray's Series 30 valve is a wafer version with flange locating holes, and the Series 31 is the companion lug version for dead-end service and other flange bolting requirements. All Bray valves are tested to 110% of full pressure rating.

A major design advantage of Bray valve product lines is international compatibility. The same valve is compatible with most world standard flanges—ANSI 125/150, BS 10D&E, DIN 10, and JIS 10. In addition, the valve is designed to be able to comply with ISO 5752 and ISO 5211. Therefore, one valve design is available for many different world markets.

Due to the modular concept of design, all Bray handles, manual gear operators, and pneumatic or electric actuators mount directly to Bray valves. No brackets or adapters are required.

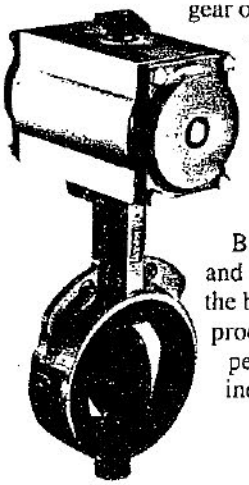

Bray interchangeability and compatibility offers you the best in uniformity of product line and low-cost performance in the industry today.

EPOXY COATING
As its standard product Bray offers valve bodies with an epoxy coating, providing excellent corrosion and wear resistance to the valve's surface—the weakest part of most metal components. The Bray epoxy coating is a hard, high gloss red finish.
Chemical Resistance—resists a broad range of chemicals including: dilute aqueous acids and alkalies, salts, salt spray, petroleum solvents, alcohols, greases and oils. Outstanding resistance to humidity and water.
Weatherability—outdoor tested resistant to ultra-violet radiation.
Abrasion Resistance—excellent resistance to abrasion.
Impact Resistance—withstands impact without chipping or cracking.

NYLON 11 COATING
Optionally available for valve bodies where outstanding protection and performance is needed. A thermoplastic produced from a vegetable based, this coating is *USDA Approved*—inert to fungus growth and molds.
Corrosion Resistance—superior resistance to a broad range of chemical environments. Salt spray tested in excess of 2,000 hours and seawater immersion tested for over 6 years without corrosion to metal substrates.
Nylon 11 features a very low co-efficient of friction and excellent resistance to impact and ultra-violet radiation.

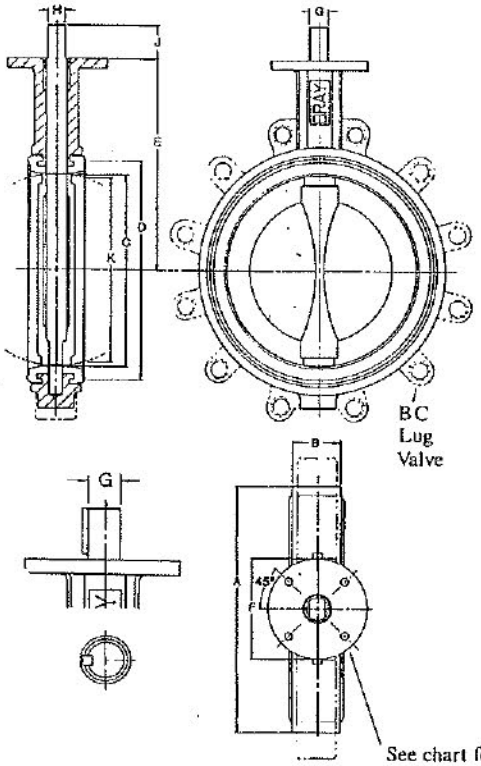

See chart for Actuator Mounting Flange Drilling.

DIMENSIONS SERIES 30 WAFER

Valve Size	A	B	C	D	E	F	Mounting Flange Drlg. BC	No. Holes	Hole Dia.	G	H	J	K
2"	3.69	1.62	2.00	2.84	5.50	3.54	2.76	4	.38	.55	.39	1.25	1.32
2½"	4.19	1.75	2.50	3.34	6.00	3.54	2.76	4	.38	.55	.39	1.25	1.91
3"	4.88	1.75	3.00	4.03	6.25	3.54	2.76	4	.38	.55	.39	1.25	2.55
4"	6.06	2.00	4.00	5.16	7.00	3.54	2.76	4	.38	.63	.43	1.25	3.57
5"	7.12	2.12	5.00	6.16	7.50	3.54	2.76	4	.38	.75	.51	1.25	4.63
6"	8.12	2.12	5.75	7.02	8.00	3.54	2.76	4	.38	.75	.51	1.25	5.45
8"	10.50	2.50	7.75	9.47	9.50	5.91	4.92	4	.56	.87	.63	1.25	7.45
10"	12.75	2.50	9.75	11.47	10.75	5.91	4.92	4	.56	1.18	.87	2.00	9.53
12"	14.88	3.00	11.75	13.47	12.25	5.91	4.92	4	.56	1.18	.87	2.00	11.47
14"	16.94	3.00	13.25	15.28	13.62	5.91	4.92	4	.56	1.38	2.00	.39x.39	13.04
16"	19.06	4.00	15.25	17.41	14.75	5.91	4.92	4	.56	1.38	2.00	.39x.39	14.85
18"	21.12	4.25	17.25	19.47	16.00	8.27	6.50	4	.81	1.97	2.50	.39x.47	16.85
20"	23.25	5.00	19.25	21.59	17.25	8.27	6.50	4	.81	1.97	2.50	.39x.47	18.73

SERIES 31 LUG

Lug Bolting Data BC	No. Holes	Threads UNC-2B
4.75	4	5/8-11
5.50	4	5/8-11
6.00	4	5/8-11
7.50	8	5/8-11
8.50	8	3/4-10
9.50	8	3/4-10
11.75	8	3/4-10
14.25	12	7/8-9
17.00	12	7/8-9
18.75	12	1-8
21.25	16	1-8
22.75	16	1 1/8-7
25.00	20	1 1/8-7

SELECTION DATA

FLANGE REQUIREMENTS

Bray valves are designed for installation between ANSI 125/150 lb. weld-neck or slip-on flanges, BS 10D&E, DIN 10, and JIS 10, either flat faced or raised face. While weld-neck flanges are recommended, Bray has specifically designed its valve seat to work with slip-on flanges, thus eliminating common failures of other butterfly valve designs. When using raised face flanges be sure to properly align valve and flange.

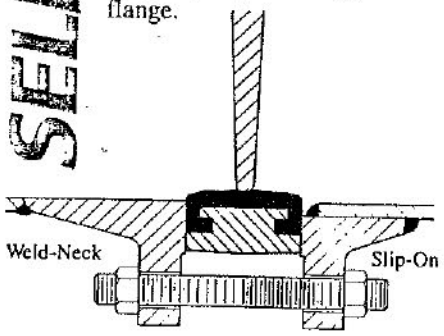

PRESSURE RATINGS*

For bi-directional bubble-tight shut off, disc in closed position:

Inches	mm	psig	bar
2–12	50–300	175	12
14–20	350–500	150	10

For dead-end service application:

Inches	mm	psig	bar
2–12	50–300	150	10

*Pressure Ratings are based on standard disc diameters. For low pressure application, Bray offers a standard reduced disc diameter to decrease seating torques and to extend seat life, thus increasing the valve's performance and reducing actuator costs for the customer.

VELOCITY LIMITS

For On/Off Services:
Fluids – 30 ft/sec (9m/s)
Gases – 175 ft/sec (54m/s)

C_V VALUES–VALVE SIZING COEFFICIENT

Valve Size (ins)	Disc Position (degrees) 90°	80°	70°	60°	50°	40°	30°	20°	10°
2	144	114	84	61	43	27	16	7	1
2½	282	223	163	107	67	43	24	11	1.5
3	461	364	267	154	96	61	35	15	2
4	841	701	496	274	171	109	62	27	3
5	1376	1146	775	428	268	170	98	43	5
6	1850	1542	1025	567	354	225	129	56	6
8	3316	2842	1862	1081	680	421	241	102	12
10	5430	4525	2948	1710	1076	667	382	162	19
12	8077	6731	4393	2563	1594	1005	555	235	27
14	10538	8674	5939	3384	2149	1320	756	299	34
16	13966	11761	7867	4483	2847	1749	1001	397	45
18	17214	14496	10065	5736	3643	2237	1281	507	58
20	22339	16812	12535	7144	4536	2786	1595	632	72

C_V is defined as the volume of water in U.S.G.P.M. that will flow through a given restriction or valve opening with a pressure drop of one (1) p.s.i. at room temperature. Recommended control angles are between 25°-70° open. Preferred angle for control valve sizing is 60°-65° open.

EXPECTED SEATING/UNSEATING TORQUES (Lb.-Ins.)

Valve Size (ins)	Full-Rated Pressure Valves ΔP (PSI) 50	100	150	175	Reduced Disc Diameter ΔP (PSI) 50
2	125	130	135	140	125
2½	195	205	215	220	195
3	260	275	290	300	260
4	400	425	450	465	267
5	615	670	725	755	410
6	805	915	1000	1045	537
8	1475	1650	1825	1915	983
10	2240	2520	2800	2940	1493
12	3420	3870	4320	4545	2280
14	4950	5700	6450	—	3300
16	6400	7700	9000	—	4267
18	7900	9900	11900	—	5267
20	10300	12900	15500	—	6867

Valve Torque Rating – Bray has classified valve torque ratings according to 3 types: non-corrosive lubricating service, general service, and severe service. Consult Bray technical bulletins for torque information.

TO USE TORQUE CHART, NOTE THE FOLLOWING:
1) For Bray valves, Series 20, 21, 30, 31, and 34.
2) Review Technical Bulletin No. 1001, Expected Seating/Unseating Torques, for explanation of the 3 service classes and their related seating/unseating torque values for given pressure differentials of Full-Rated and Reduced Disc Diameter valves.
3) Dynamic Torque values are not considered. See Technical Bulletin 1002 for evaluation of Dynamic Torque values vs. Seating/Unseating Torque values.
4) Do not apply a safety factor to above torque values when determining actuator output torque requirement.
5) For 3 way assemblies where one valve is opening and other is closing, multiply torque by 1.5 factor.

Bray VALVE & CONTROLS U.S.A.

A Subsidiary of BRAY INTERNATIONAL, Inc.

SERIES 30
ES-0010
Date: January 1987

Valve Size	A	B	C	D	E	F	Top Plate Drilling BC	No. Holes	Hole Dia.	G	H	J	K	Adapter Code	W
2"	3.69	1.62	2.00	2.84	5.50	3.54	2.76	4	.38	.55	.39	1.25	1.32	A	6.5
2 1/2"	4.19	1.75	2.50	3.34	6.00	3.54	2.76	4	.38	.55	.39	1.25	1.91	A	8.5
3"	4.88	1.75	3.00	4.03	6.25	3.54	2.76	4	.38	.55	.39	1.25	2.55	A	9.5
4"	6.06	2.00	4.00	5.16	7.00	3.54	2.76	4	.38	.63	.43	1.25	3.57	B	12.0
5"	7.12	2.12	5.00	6.16	7.50	3.54	2.76	4	.38	.75	.51	1.25	4.63	C	16.0
6"	8.12	2.12	5.75	7.02	8.00	3.54	2.76	4	.38	.75	.51	1.25	5.45	C	20.0
8"	10.50	2.50	7.75	9.47	9.50	5.91	4.92	4	.56	.87	.63	1.25	7.45	D	35.0
10"	12.75	2.50	9.75	11.47	10.75	5.91	4.92	4	.56	1.18	.87	2.00	9.53	E	50.0
12"	14.88	3.00	11.75	13.47	12.25	5.91	4.92	4	.56	1.18	.87	2.00	11.47	E	87.0

Note: K is disk chordal dimension at valve face.

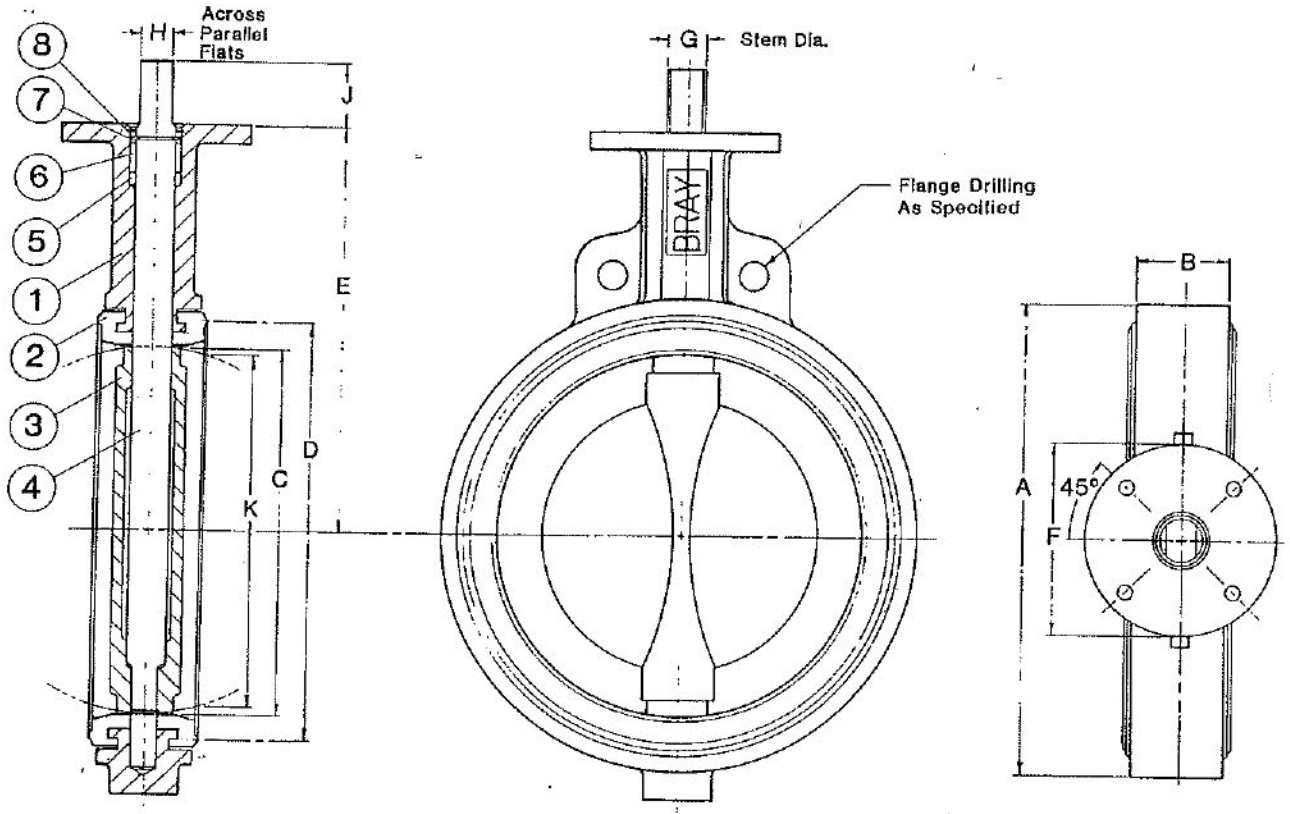

ITEM No.	NAME	No. REQUIRED	SERIES/PART No.	MATERIAL	SPECIFICATION/REMARKS
8	Retaining Ring	1			
7	Stem Retainer	2			
6	Bushing	1			
5	Packing	1			
4	Stem	1			
3	Disk	1			
2	Seat	1			
1	Body	1			

Valve Size _____ Flg. Drilling _____
Pressure Rating _____
Customer/Project _____
Inq./P.O. No. _____
Bray Order No. _____
Certified Correct By _____ Date _____

The High Performance Company

BRAY VALVE & CONTROLS U.S.A., INC.
A Subsidiary of BRAY INTERNATIONAL, Inc.

PARTS LIST And DIMENSIONS (Inches)
BUTTERFLY VALVE, SERIES 30
Sizes 2"–12"

Series	Size	Part No.	Material Trim Code	Drawing No.
				ES-0010

Bray

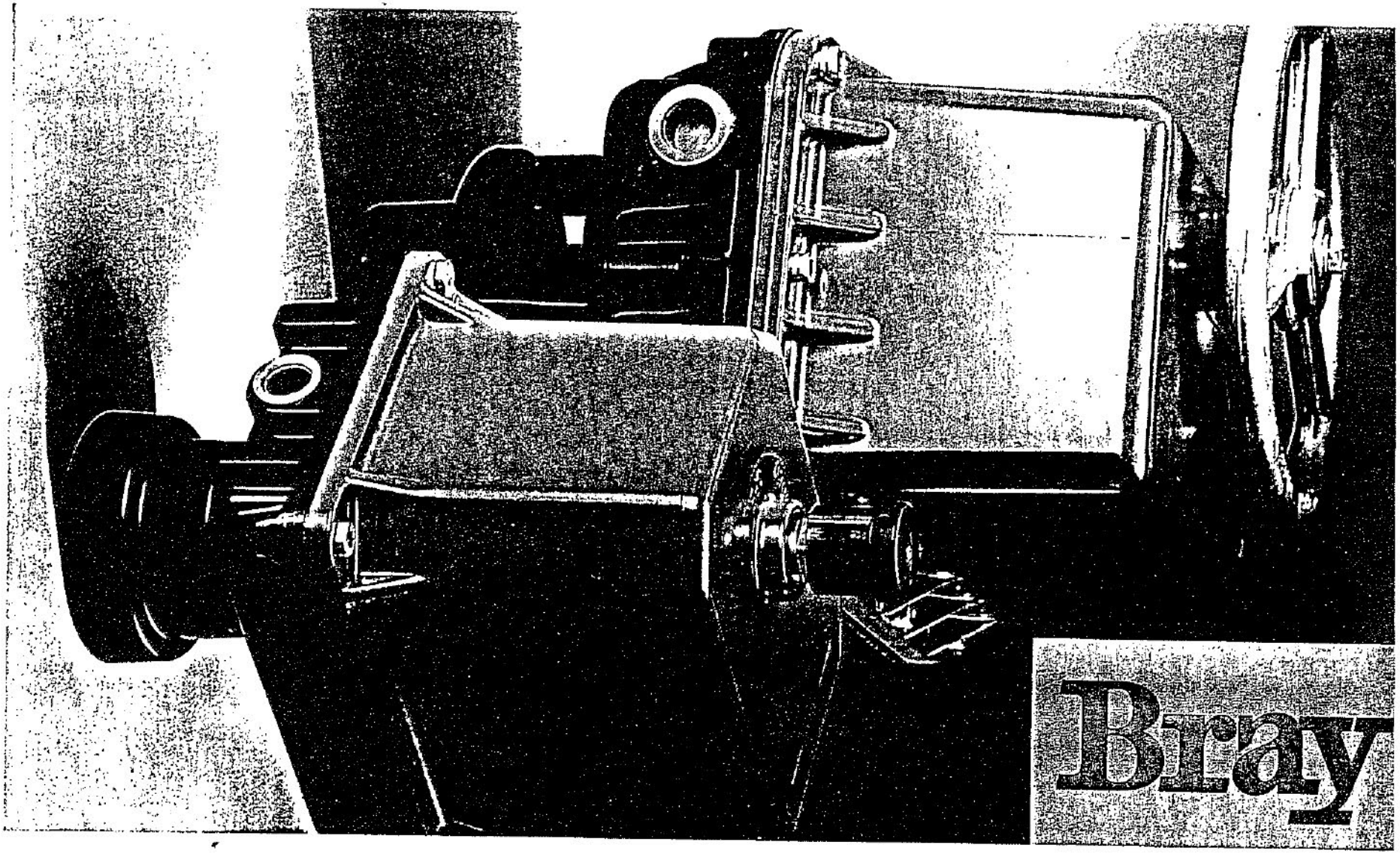

The High Performance Company

ELECTRIC ACTUATOR

SERIES 71
Output Torque

SERIES 71

DESIGN FEATURES

- Bray actuators are powered by a rugged high-torque, integral, single phase, reversible motor.
- All models feature the unique Bray disengageable manual over-ride. The valve cannot be operated electrically while manual over-ride is engaged.
- Precision cut gears and shafts are heat treated, high alloy steel.
- Unique adjustment plates permit fast, accurate setting of travel limit switches. Switch activating cams are independently adjustable for maximum setting flexibility and accuracy.
- 2 SPDT Switches.
- A mechanical, visual output shaft position indicator is standard on all models.
- Built-in motor overload protector.
- Bray actuators are ideally suited for automated and computer controlled systems.
- All models are permanently lubricated.
- Gear train will withstand stall torque.
- Can be mounted and run in any position.
- Accessible, clearly marked integral terminal strip assures fast, easy wiring.
- Output for output the most compact and versatile actuators in the industry.
- Electro-less nickel plated output shafts provide maximum corrosion protection.
- CSA approved Enclosure 4 on standard models.

ECHNICAL DATA

OLTAGE: 120 VAC 60/50 Hz, 1 phase — Standard

OPERATION: All units standard reversible

LIMIT SWITCHES: All Models UL and CSA listed: 15 amps and 1/3 hp, 125 or 250 vac; 1/2 amp, 125 vdc; 1/4 amp, 250 vdc; 5 amps, 120 vac "L" (lamp load).

CONDUIT ENTRY: 1/2" Conduit on models 71-0003, -0004, -0006, and -0010. 3/4" on 71-0020, -0040, -0100, -0200 and -0480.

AMBIENT TEMPERATURE: Minus 40 degrees F. to plus 150 degrees F.

LUBRICATION: High temperature grease for gears; self-lubricating bearings.

MOUNTING POSITIONS: Universal.

WEIGHT: 71-0003, -0010 — 12.5 to 14.5 pounds (depending on model.)
71-0020, -0040, and -0100 — 34 pounds.
71-0200 — 93 pounds.
71-0480 — 120 pounds.

ENCLOSURES:
NEMA-4 — Watertight
NEMA-7 — Hazardous Location
eets NEMA standards for use in
ardous locations: Class 1, Groups C
nd D, Class II Groups E, F and G. CSA approved models available.

SERIES 71-0003, -0006, -0010

These actuators were designed for butterfly valves from two inches through six inches.

-0003	-0006	-0010
275 lb.-ins. torque at 10 sec/90°	600 lb.-ins. torque at 10 sec/90°	1100 lb.-ins. torque at 15 sec/90°

CURRENT RATINGS

Series	-0003		-0006		-0010	
Volts AC	120	220	120	220	120	220
10 Sec.	.70	.45	.80	.50	—	—
15 Sec.	—	—	—	—	.60	.40

SERIES 71-0020, -0040, -0100

Models have an electrical lock-out switch to prevent electrical operation while hand-wheel is engaged. These actuators are designed for butterfly valves from eight inches through twenty inches.

-0020	-0040	-0100
2000 lb.-ins. torque at 16 sec/90°	4600 lb.-ins. torque at 16 sec/90°	10000 lb.-ins. torque at 30 sec/90°

CURRENT RATINGS

Series	-0020		-0040		-0100	
Volts AC	120	220	120	220	120	220
16 Sec.	1.80	.90	2.50	1.10	—	—
30 Sec.	—	—	—	—	2.80	1.25

SERIES 71-0200, -0480

Models 71-0200 and 71-0480 have a disengageable hand-wheel with an automatic electrical lock-out safety switch to prevent electrical operation while handwheel is engaged. They feature special heat treated spur gears and worm drive.

Both models have dual cams with limit switches for fast, accurate travel adjustment and are factory set for 0° to 90° rotation. Mechanical stops can be adjusted to compensate for valve wear or seal fatigue.

Under most operating conditions these units will provide automated on-off service for up to 48 inch butterfly valves.

-0200	-0480
21000 lb. in. torque at 55 sec/90°	48000 lb. in. torque at 125 sec/90°

CURRENT RATINGS

Series	-0200		-0480	
Volts AC	120	220	120	220
55 Sec.	7.0	3.20	—	—
125 Sec.	—	—	7.0	3.20

Optional 220/440 VAC, 3 phase motor.

All above actuators standard:
120 VAC and 220 VAC, single phase motor.
Current Ratings in amps (Locked Rotor), speeds in seconds/90 turn.

OPTIONAL FEATURES

- Duty Cycle — Continuous modulating
- Voltages — 12, 24, 125 VDC; 24, 220 VAC-50/60 Hz-1 PHASE; 220/240 VAC 3 PHASE (Models 71-0020, -0040, -0100, 0200, and -0480 only)
- Integral potentiometer, 150, 500, 1000, 5000, 10000 and 15000 OHM, 2 Watts, 1% linearity — standard. Other resistances available.
- Extra isolated switches for light indication.
- Auxiliary switches for other switching functions.
- Relays for two-wire control.
- Relays for momentary contact actuation.
- Heaters and thermostats.
- Breathers and drains.
- Extended brackets for extreme temperatures.
- Heat shields.
- Special corrosion-resistant coatings.
- Manual electrical control stations with many combinations for local or remote control.
- Infinite positioning controllers for "On-Off," floating or proportional control. These controllers are designed to automatically proportion in relation to a resistance, current or voltage command signal. The command signal may be obtained from a detector or a manual command potentiometer.
- Custom designs for varying requirements.
- DIGI-SPEED solid state, AC variable speed controls. Infinitely variable without torque loss.
- CSA approved hazardous locations: Class I Groups C, D; Class II Groups E, F, G; standard models.
- Ductile iron enclosures for marine applications.
- Nuclear qualified Class 1E for outside containment.

DISTRIBUTOR

Bray VALVE & CONTROLS U.S.A.

A Subsidiary of BRAY INTERNATIONAL, Inc.
13333 Westland East Blvd. Houston, Texas 77041
713/894-5454 FAX 713/894-9499

© 1992 Bray International. All rights reserved.

71-0003,-0004,-0006, &-0010

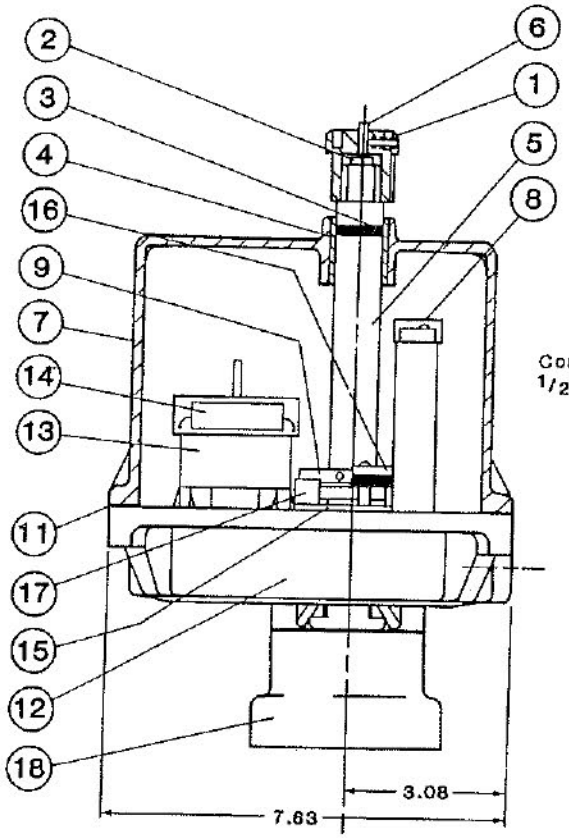

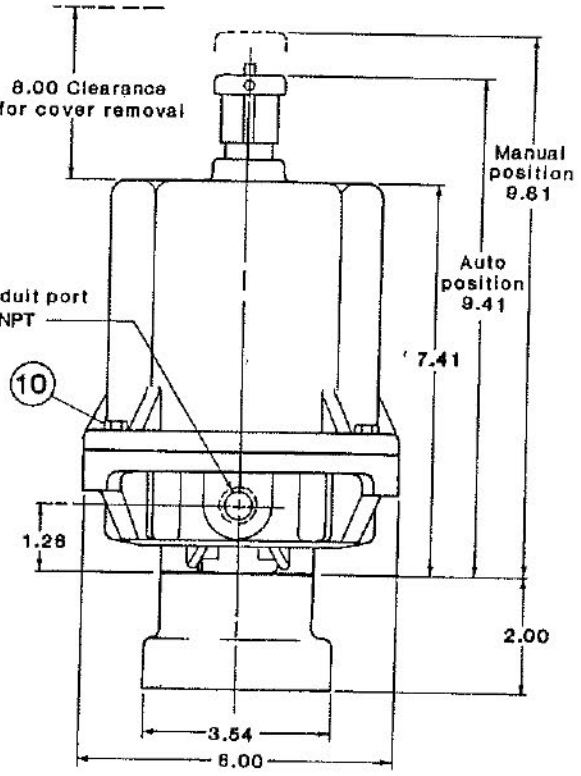

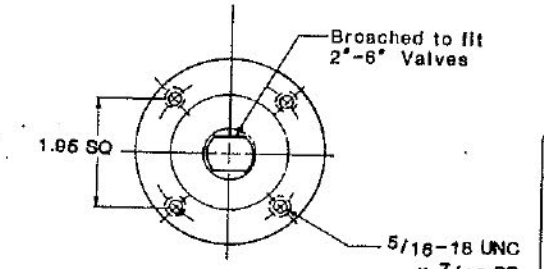

TECHNICAL DATA

VOLTAGE 120 VAC 60/50 HZ , 1 PHASE — STANDARD

OPERATION STANDARD REVERSIBLE (UNIDIRECTIONAL UPON REQUEST)

LIMIT SWITCHES UL & CSA LISTED — 15 AMPS & 1/3 HP, 125 OR 250 VAC ; 1/2 AMP, 125 VDC; 1/4 AMP, 250 VDC ; 5 AMPS, 120 VAC "L" (LAMP LOAD)

AMBIENT TEMPERATURE MINUS 40 DEGREES F TO PLUS 150 DEGREES F *

LUBRICATION HIGH TEMPERATURE GREASE FOR GEARS , SELF-LUBRICATING BEARINGS

MOUNTING POSITIONS UNIVERSAL

WEIGHT 12 5 TO 14 5 POUNDS (DEPENDING ON MODEL)

* THE ADDITION OF A HEATER AND THERMOSTAT IS RECOMMENDED FOR ALL OUTDOOR INSTALLATIONS AND FOR ALL APPLICATIONS THAT ARE EXPOSED TO HIGH HUMIDITY OR TEMPERATURES BELOW 32 DEGREES F.

PARTS LIST

DOC NO	DESCRIPTION	QTY	PART NO
1	KNOB — MANUAL	1	15-01
2	RETAINER — SPRING	1	25-
3	"O" RING	1	14-78
4	BUSHING	1	22-83
5	SHAFT — OUTPUT	1	21-86
6	PUSH ROD — DECLUTCHING	1	21-93
7	CONTROL COVER	1	10-24
8	TERMINAL STRIP	1	72-01
9	CAM	2	68-05
10	COVER BOLTS 1/4-20 x 3/4	4	126X470-3
11	GASKET	1	16-27
12	GEAR CASE ASSEMBLY	1	AS REQUIRED
13	MOTOR	1	AS REQUIRED
14	CAPACITOR	1	AS REQUIRED
15	MICRO-ADJUSTMENT PLATE	2	65-14
16	LIMIT SWITCH	2	63-01
17	MICRO-ADJUSTMENT CAM	2	68-07

Section III B

COMPACT VACUUM SWITCHES

Adjustable Deadband, Fixed Deadband, and Two-Stage Types

ASCO® TRI POINT®

SPECIFICATIONS

Fixed deadband units have an adjustable set point and non-adjustable automatic reset point.

Two-stage units consist of two separate snap action switches, each with an independently adjustable set point and non-adjustable reset point. The difference between the set and reset points of each switch is the deadband as listed below; the minimum difference between the set points of the two switches is the separation.

Full range adjustable deadband units incorporate the unique alternating fulcrum balance plate which allows independent adjustment of the set and reset points over the full operating range. The minimum difference between set and reset points is the deadband which is listed below; the maximum difference is the full range of the switch.

Limited adjustable deadband units incorporate an adjustable snap action switch. They have an adjustable set point and an adjustable deadband.

HOW TO SELECT

1. Determine the vacuum range required.
2. Check that rated overrange pressure rating is sufficient.
3. Read across and select a switch unit according to the type of operation, deadband and enclosure required.
4. Continue across the same line and select the vacuum transducer.

. See Page 6 for "How to Order."

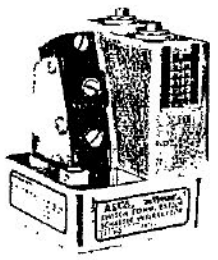

Open Frame Type Series PA

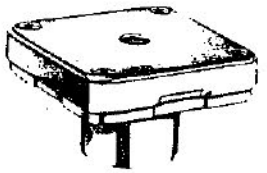

Type RV 1/4" N.P.T.

STANDARD ELECTRICAL RATINGS

For Adjustable Deadband PA and PG Series see Pages 28 & 29.
For Fixed Deadband PB Series see Page 30.
For Two-Stage PC Series see Page 31.

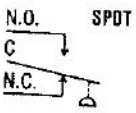

TEMPERATURE RATINGS

Ambient: -4°F. (-20°C.) to 122°F. (50°C.)

Fluid: For Buna "N" or Neoprene Diaphragm -4°F. (-20°C.) to 180°F. (82°C.)
For Viton Diaphragm -4°F. (-20°C.) to 250°F. (121°C.)

TABLE I. ADJUSTABLE DEADBAND SWITCHES

SPECIFICATIONS		SWITCH UNITS											TRANSDUCER UNITS		
		LIMITED ADJUSTABLE DEADBAND					FULL RANGE ADJUSTABLE DEADBAND								
Adjustable Operating Range	Rated Overrange Pressure (P.S.I.G.)	Limited Adjustable Deadband ① in. Hg From	To	General Purpose Enclosure Catalog No.	Epoxy-Painted Steel Raintight Enclosure ② Catalog No.	316 S.S. Raintight Enclosure ②④ Catalog No.	Open Frame Catalog No.	Adjustable Deadband ① in. Hg From	To	General Purpose Enclosure Catalog No.	Epoxy-Painted Steel Raintight Enclosure ② Catalog No.	316 S.S. Raintight Enclosure ②④ Catalog No.	Open Frame Catalog No.	Aluminum and Buna "N" Catalog No.	Brass and Buna "N" Catalog No.	303 S.S. and Viton Catalog No.
0 - 30" Hg (VAC)	50	1.8	5.0	PG30A	PG31A	PG34A	PG36A	4	30	PA30A	PA31A	PA34A	PA36A	RV34A11	RV34A21	RV34A32
30" Hg(V) - 14 P.S.I.G.	50	2.8	6.0	PG20A	PG21A	PG24A	PG26A	6	60	PA20A	PA21A	PA24A	PA26A	RV24A11	RV24A21	RV24A32

TABLE II. FIXED DEADBAND AND TWO-STAGE SWITCHES

SPECIFICATIONS		SWITCH UNITS												TRANSDUCER UNITS		
		FIXED DEADBAND					TWO-STAGE									
Adjustable Operating Range	Rated Overrange Pressure (P.S.I.G.)	Fixed Deadband As Listed Below ①	General Purpose Enclosure Catalog No.	Epoxy-Painted Steel Raintight Enclosure ② Catalog No.	316 S.S. Raintight Enclosure ②④ Catalog No.	Open Frame Catalog No.	Fixed Deadband As Listed Below ①	Separation ③ Maximum—Full Range	Minimum—As Listed Below	General Purpose Enclosure Catalog No.	Epoxy-Painted Steel Raintight Enclosure ② Catalog No.	316 S.S. Raintight Enclosure ②④ Catalog No.	Open Frame Catalog No.	Aluminum and Buna "N" Catalog No.	Brass and Buna "N" Catalog No.	303 S.S. and Viton Catalog No.
30" Hg (VAC)	50	1" Hg	PB30A	PB31A	PB34A	PB36A	2.7" Hg	3" Hg		PC30A	PC31A	PC34A	PC36A	RV34A11	RV34A21	RV34A32
3(V) - 14 P.S.I.G.	50	1" Hg	PB20A	PB21A	PB24A	PB26A	4.3" Hg	6" Hg		PC20A	PC21A	PC24A	PC26A	RV24A11	RV24A21	RV24A32

Notes:

① Approximate deadband values are given for the midpoint of the range. Many production units will have smaller deadbands than shown.

② Raintight units are designed to Types 3 and 3S with 7/8" clearance hole to accept standard hubs and connectors. Units will meet Watertight Type 4 (also 4X and 6 for stainless steel units) when ordered with suffix "1" conduit hub (see Page 45).

③ Approximate minimum separation is given for midpoint of range. Many units will have smaller values.

④ Available only as assembled units.

Section M A

COMPACT PRESSURE SWITCHES

Fixed Deadband Type

Series PB

ASCO® TRI POINT®

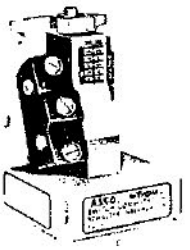

Open Frame Type

Types RD thru RQ
¼" N.P.T.

SPECIFICATIONS

Fixed deadband units have an adjustable set point and a non-adjustable automatic reset point.

HOW TO SELECT

1. Determine the pressure range required.
2. Check that rated overrange pressure rating is sufficient.
3. Read across and select a switch unit with the type of enclosure required.
4. Continue across the same line and select the transducer.
5. See Page 6 for "How to Order."

STANDARD ELECTRICAL RATINGS

5 Amps Res., 125, 250 VAC
⅛ HP 125 VAC, ¼ HP 250 VAC
½ Amp Res., 125 VDC
¼ Amp Res., 250 VDC

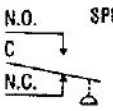

TEMPERATURE RATINGS

Ambient: -4°F. (-20°C.) to 122°F. (50°C.)

Fluid: For Buna "N" or Neoprene Diaphragm
-4°F. (-20°C.) to 180°F. (82°C.)
For Viton Diaphragm
-4°F. (-20°C.) to 250°F. (121°C.)
For 316 S.S. Diaphragm
-50°F. (-45°C.) to 300°F. (149°C.)
For all Polyester Transducers
Maximum Temperature 180°F. (82°C.)
except water service where
maximum is 130°F. (55°C.)

SPECIFICATIONS			SWITCH UNITS.				PRESSURE TRANSDUCER UNITS				
Adjustable Operating Range	Rated Overrange Pressure (P.S.I.G.)③	Fixed Deadband As Listed Below ①	General Purpose Enclosure	Epoxy-Painted Steel Raintight Enclosure	316 S.S. Raintight Enclosure ①⑤	Open Frame	Aluminum and Buna "N"	Polyester with Threaded Brass Insert and Buna "N"	Brass and Buna "N"	303 S.S. and Viton ④	All 316 S.S.
			Catalog No.	Catalog No.	Catalog No.	Catalog No.	Catalog No.	Catalog No.	Catalog No.	Catalog No.	Catalog No.
0 - 4 P.S.I.G.	60	.05 P.S.I.G.	PB40A	PB41A	PB44A	PB46A	RD40A11	RD40A71	RD40A21	RD40A32	—
0 - 9 P.S.I.G.	60	.4 P.S.I.G.	PB30A	PB31A	PB34A	PB36A	RD30A11	RD30A71	RD30A21	RD30A32	—
2 - 18 P.S.I.G.	60	.4 P.S.I.G.	PB20A	PB21A	PB24A	PB26A	RD20A11	RD20A71	RD20A21	RD20A32	—
2 - 18 P.S.I.G.	100	.6 P.S.I.G.	PB30A	PB31A	PB34A	PB36A	—	—	—	—	RE30A44
4 - 36 P.S.I.G.	150	.7 P.S.I.G.	PB20A	PB21A	PB24A	PB26A	RE20A11	RE20A71	RE20A21	RE20A32	RE20A44
6 - 60 P.S.I.G.	150	.9 P.S.I.G.	PB10A	PB11A	PB14A	PB16A	RE10A11	RE10A71	RE10A21	RE10A32	RE10A44
10 - 100 P.S.I.G.	200③	1.5 P.S.I.G.	PB10A	PB11A	PB14A	PB16A	RF10A11	RF10A71③	RF10A21	RF10A32	RF10A44
20 - 200 P.S.I.G.	400③	3 P.S.I.G.	PB10A	PB11A	PB14A	PB16A	RG10A11	RG10A71③	RG10A21	RG10A32	RG10A44
30 - 300 P.S.I.G.	450	5 P.S.I.G.	PB10A	PB11A	PB14A	PB16A	RH10A11	—	RH10A21	RH10A32	RH10A44
40 - 400 P.S.I.G.	500	6 P.S.I.G.	PB10A	PB11A	PB14A	PB16A	RJ10A11	—	RJ10A21	RJ10A32	RJ10A44
60 - 600 P.S.I.G.	2000	12 P.S.I.G.	PB20A	PB21A	PB24A	PB26A	—	—	RL20A21	RL20A42④	—
100 - 1000 P.S.I.G.	2000	15 P.S.I.G.	PB10A	PB11A	PB14A	PB16A	—	—	RL10A21	RL10A42④	—
180 - 1800 P.S.I.G.	4500	36 P.S.I.G.	PB20A	PB21A	PB24A	PB26A	—	—	RN20A21	RN20A42④	—
300 - 3000 P.S.I.G.	4500	45 P.S.I.G.	PB10A	PB11A	PB14A	PB16A	—	—	RN10A21	RN10A42④	—
00 - 6000 P.S.I.G.	7500	90 P.S.I.G.	PB10A	PB11A	PB14A	PB16A	—	—	—	RQ10A42④	—

Notes:

① Approximate deadband values are given for the midpoint of the range. Many production units will have smaller deadbands than shown.

② Raintight units are designed to Types 3 and 3S with ⅞" clearance hole to accept standard hubs and connectors. Units will meet Watertight Type 4 (also 4X and 6 for stainless steel units) when ordered with suffix "1" conduit hub (see Page 45).

③ Rated overrange pressure on RF10A71 is 150 P.S.I.G. and on RG10A71 is 300 P.S.I.G.

④ Transducers ending in 42 have 316 S.S. bodies, not 303 S.S.

⑤ Available only as assembled switches.

MIXMOR PORTABLE MIXERS

DIRECT DRIVE. The mixer drive assembly components are factory aligned and tested, and are shipped as a package for jobsite mounting. The drive assembly includes an electric or air motor with prelubricated ball bearings. The motor has a NEMA Style C footless mounting for direct connection to the quill housing. Because of the direct drive design, full motor speed is transmitted to yield mixer shaft output speed of 1750 rpm for ¼ thru ¾ horsepower and 1150 rpm for 1 thru 5 horsepower.

The lower chuck component consists of an aluminum housing containing a widely spaced, prelubricated, double-sealed ball bearing to provide outboard support of the chuck shaft, which is subject to mixing stresses.

The swivel ball-and-socket mixer mounting arrangement attached to the quill housing is designed to allow 360° rotation on the horizontal plane and 90° on the vertical plane so proper positioning of the shaft and propellers can be achieved at the jobsite. A single or double (depending on hp) aluminum handwheel assembly is provided for mounting the bronze clamp on the tank wall.

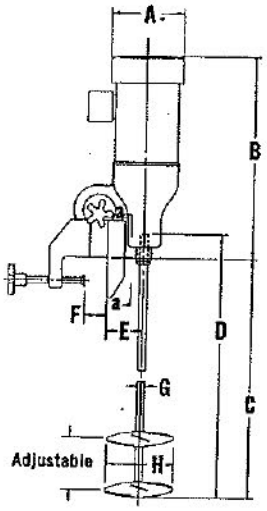

MODEL	HP	DIMENSIONS, INCHES								WEIGHT, POUNDS*
		A	B	C	D	E	F	G	H DUAL PROP. DIA.	
D-14	¼	6	17	35	36	3	3	⅝	3½	34
D-13	⅓	6	17	35	36	3	3	⅝	4	35
D-12	½	7	20	46	48	3¾	3¾	⅝	4½	52
D-34	¾	7	21	46	48	3¾	3¾	⅝	5	55
D-11	1	7	21	58	60	3¾	3¾	⅞	6	85
D-15	1½	9	21	58	60	3¾	3¾	⅞	6½	112
D-2	2	9	23	58	60	3¾	3¾	⅞	7	123
D-3	3	11	24	58	60	3¾	3¾	⅞	7½	159
D-5	5	11	25	58	60	3¾	3¾	⅞	7½	182

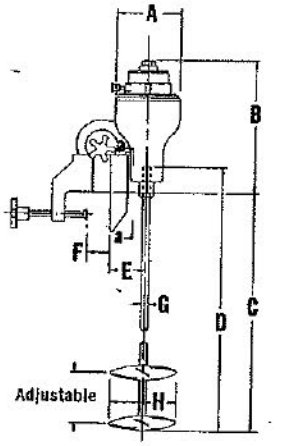

MODEL	HP	DIMENSIONS, INCHES								WEIGHT, POUNDS*
		A	B	C	D	E	F	G	H DUAL PROP. DIA.	
DA-13	⅓	6½	12	35	36	3	3	⅝	4	30
DA-11	1	6½	12	46	48	3	3	⅝	6	36
DA-2	2	6½	16½	58	60	3¾	3¾	⅞	6½	70
DA-4	4	6½	18	58	60	3¾	3¾	⅞	7½	80

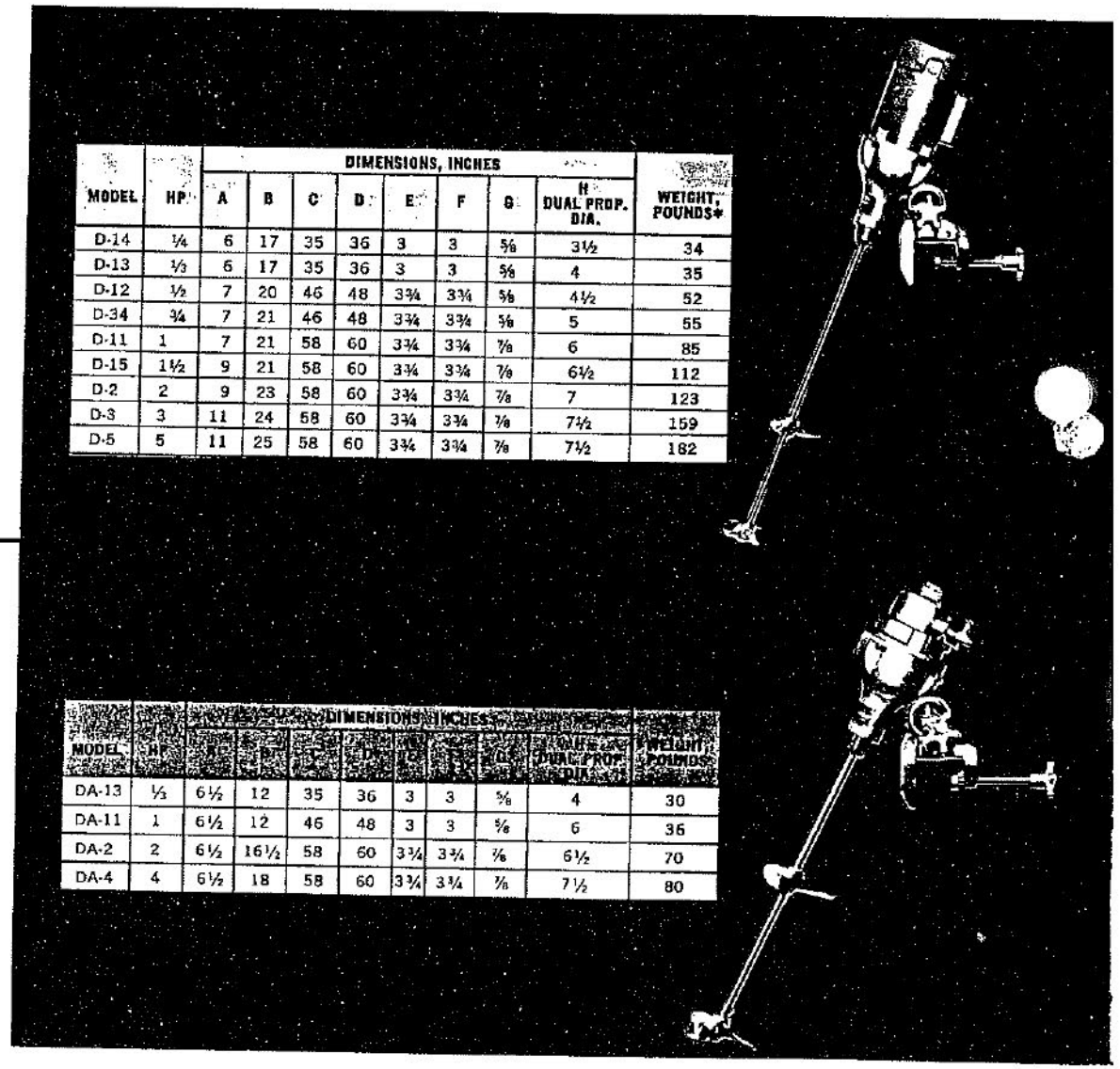

SECTION a-a

CLAMP FACE

Dimensions, Inches

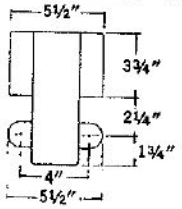

AS FURNISHED FOR:
Model D – 1 through 5 hp, DA-2 DA-4
Model G – 1/2 through 5 hp,
Model GA – 1, 2, & 4

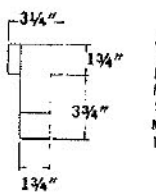

AS FURNISHED FOR:
Model D – 1/4 and 1/3 hp.
Model DA – 1/3 and 1 hp.

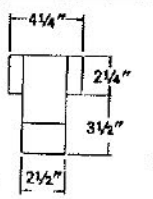

AS FURNISHED FOR.
Model G – 1/4 and 1/3 hp.
Model GA – 1/3 hp only.
Model D – 1/2 and 3/4 hp.

KECKLEY

Balanced Double Seated (not tight closing) Globe or Angle

BRONZE • CAST IRON • STAINLESS STEEL BODY

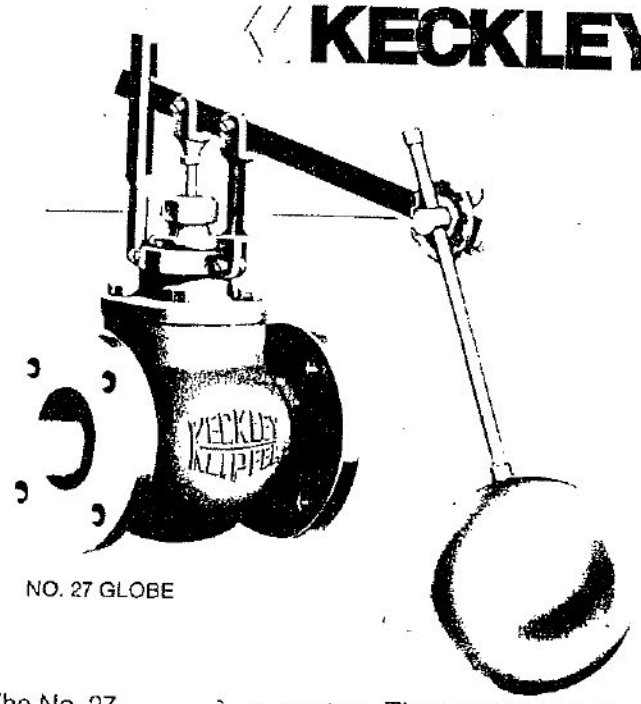

NO. 27 GLOBE

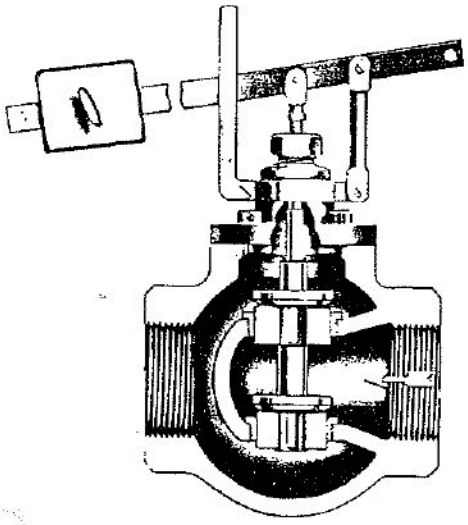

). 62 GLOBE

[illegible]: The No. 27 double seated float valve is the type most widely used for the automatic control of the supply of liquids to an open tank where dead-end closing is not essential and valve inlet pressures are normal. Many thousands are in use on large and small water, oil and chemical storage tanks in all types of industries.

Where a drop-tight closing float valve, or a valve for higher than ordinary pressure is required, one of the single seated valves, described on the following pages, should be selected. The maximum inlet pressures for the sizes of the No. 27 valve are shown in the table on the opposite page.

The No. 62 lever valve is the same valve minus the float, float rod and rosette. It may be operated by a float inside a closed tank or float cage; by hand or electric solenoid as a quick opening valve; and wherever a double seated sliding stem valve is required.

[illegible]: These valves are all metal, simple in operation, sturdy in construction and of the best materials and workmanship. A double seated inner valve, as illustrated, is standard. Both angle and globe pattern bodies are available in all the sizes. The standard valve can be adapted to nearly any installation.

The swivel yoke, which supports the lever, can be turned and secured at any angle. The length and angle of the float rod can be adjusted at the rosette so that the valve can be easily adapted to various locations.

Materials: In sizes 1½ inch and smaller, the No. 27 and No. 62 valves have bronze bodies and trim with integral seats. In sizes 2 inches and larger, the standard bodies are cast iron with bronze trim and removable seats. Stainless steel trim can also be supplied. All iron, all bronze and all stainless steel valves can be supplied at extra cost in many sizes.

Operation: As ordinarily assembled and used as a filling controller, the inner valve in the No. 27 rises and opens as the float drops with the water level. With the lever reversed, the float and inner valve move in the same direction so that the valve will open on level rise and can be used as a drainage controller.

In the same manner, the No. 62 valve may be assembled for either direct or reverse movement.

KECKLEY

Balanced Double Seated (not tight closing) Globe or Angle

BRONZE • CAST IRON • STAINLESS STEEL BODY

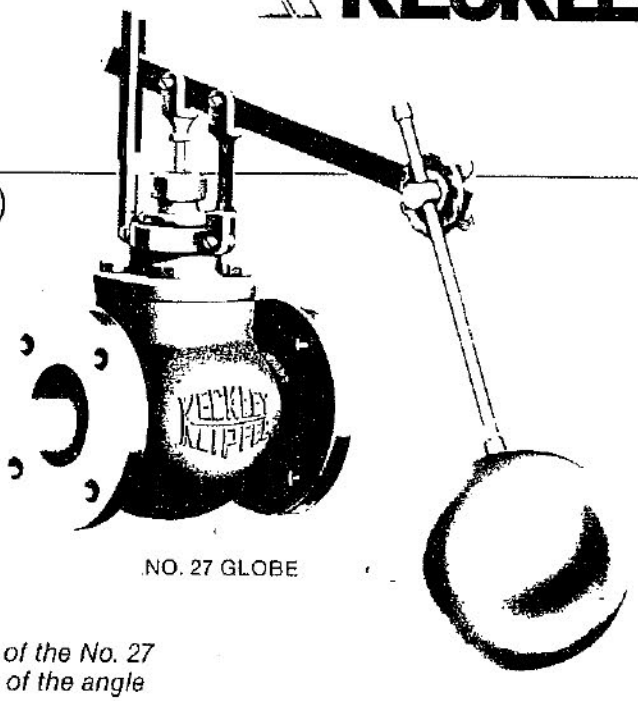

NO. 27 GLOBE

INSTALLATION: A float valve when used on a water tank installation is best located near the surface of the water with the float where it will be least disturbed by waves. The discharge pipe extending below the surface helps to prevent waves. Where sanitary regulations forbid the use of such a discharge pipe because of the possibility of siphoning out of the tank, the discharge may flow into a funnel and perforated pipe as shown on bulletin page 13. The angle pattern valve will avoid the need for an elbow.

Note that the inlet of the No. 27 valve is at the side of the angle pattern body.

The valve stem should be vertical to avoid friction and wear on the inner valve sliding on its side. The valve will operate just as well if inverted, but the lever must be reversed. If space limitations require the valve to be installed with stem horizontal in a vertical pipe, a lever bent 90° can be supplied. The valve may be submerged, if desired.

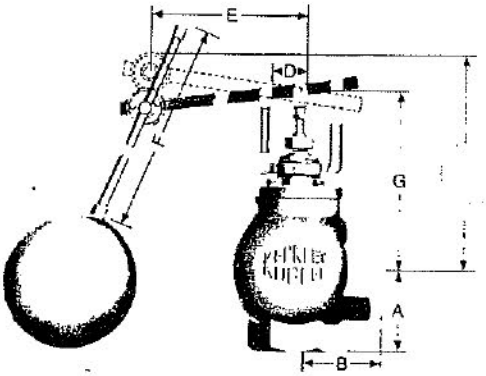

NO. 27 ANGLE

LIST OF PARTS

Body		Packing Box	Float
Inner Valve		Cover	Float Rod
Seat Bushings	upper / lower	Swivel Guide Yoke	Float Rod Bolt and Nut
Valve Stem		Guide Arm	Rosette
Stem Clevis		Lever	

NO. 27—DIMENSIONS—WEIGHTS (approximate)

Size Inches	A—Inches Angle Pattern			B—Inches Angle Pattern			Face to Face—inches Globe Pattern			Angle and Globe Inches					Float Diameter Inches	Shipping Weight—Lbs.			Capacity Factor See Page 3	Max. Inlet Pressure
	Std. Scr.	Std. Flg.	Ex. Hvy. Flg.	Std. Scr.	Std. Flg.	Ex. Hvy. Flg.	Std. Scr.	Std. Flg.	Ex. Hvy. Flg.	C	D	E	F	G		Std. Scr.	Std. Flg.	Ex. Hvy. Flg.		
⅛	2	—	—	2	—	—	4⅛	—	—	8⅝	1 15/16	13 11/16	16	5	7	10	—	—	.04	150
¼	2	—	—	2	—	—	4⅛	—	—	8⅝	1 15/16	13 11/16	16	5	7	10	—	—	.15	150
1	2⅛	—	—	2⅛	—	—	4⅜	—	—	8¾	1 15/16	13 11/16	16	5 3/16	7	13	—	—	.24	150
1¼	2⅛	—	—	2¼	—	—	4½	—	—	8⅞	1 15/16	13 11/16	16	5¼	7	14	—	—	.40	120
1½	2¼	—	—	2¼	—	—	4½	—	—	8⅞	1 15/16	13 11/16	16	5¼	7	14	—	—	.57	100
2	4¼	4¼	4½	3¼	3¼	3½	6½	6½	7	12¾	2	17⅜	16	8½	7	29	38	42	1.4	75
2½	5¼	5⅜	6 3/16	3 15/16	4 1/16	4⅜	7⅞	8 3/16	8 13/16	13⅜	2	17⅜	18	9¼	8	45	65	75	1.7	60
3	5¾	5¾	6⅛	4⅝	4⅝	5	9¼	9¼	10	14¼	2	17⅜	18	9⅝	8	67	86	100	2.3	50
4	—	6 15/16	7¼	—	5⅜	5 11/16	—	10¾	11⅜	14½	2	17⅜	18	10⅛	8	—	120	137	4.4	35
5	—	6⅝	7 1/16	—	6⅛	7 1/16	—	12	12⅞	19	2½	20½	24	12½	10	—	168	190	7.5	30
6	—	8 7/10	8⅝	—	6½	6 15/16	—	13	13⅞	19¾	2½	20½	24	13	10	—	194	229	10.2	25
8	—	8⅜	8¾	—	8⅜	8⅝	—	16¾	17⅞	25⅜	3	28	30	16⅛	10	—	342	409	15.7	20
10	—	10¼	10 15/16	—	10¼	10 15/16	—	20¼	21⅝	29¾	3	41	30	18½	12	—	480	572	25.0	15
12	—	11⅛	12⅝	—	11⅛	12⅝	—	22⅝	24⅛	32	3	41	30	20	12	—	715	853	40.0	12

Certified Dimensional Sheets Available

Koflo®

Static In-Line Mixers

Tomorrow's Technology . . . Today

Koflo® Mixers — increased mixing, with lo

Koflo Mixers deliver to you many advantages, low cost efficient mixing, no maintenance.

Koflo Increased mixing with lower pressure loss than conventional mixers.

Koflo No fouling, as in other motionless mixers.

Koflo True sanitary design.

Koflo Constructed of various metallurgies, PVC, FRP, PTFE

Koflo Elimination of maintenance requirements.

Koflo No moving parts, therefore, no spare parts are necessary.

Koflo Easy installation.

Koflo Predictable geometric scale-up from laboratory to production.

Koflo Long service life.

Koflo Low cost.

Koflo Stocks all popular sizes and materials.

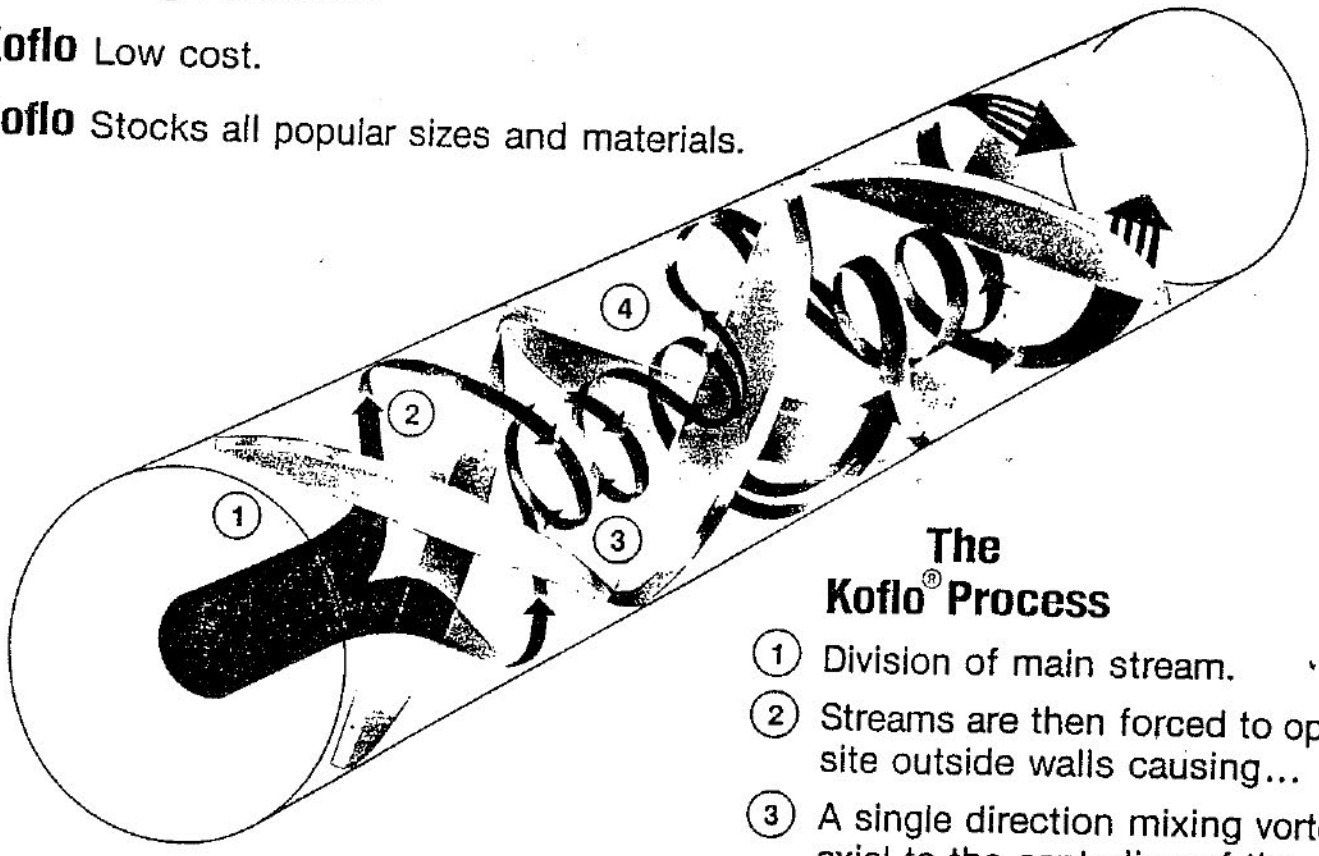

The Koflo® Process

1. Division of main stream.
2. Streams are then forced to opposite outside walls causing...
3. A single direction mixing vortex axial to the centerline of the second element.
4. Mixing vortex is sheared and Step 1 re-occurs but with the opposite directional rotation.

NOTE: Because mixing is done around the axial centerline and in the direction of the main stream flow, considerably less back pressure is realized in conjunction with better mixing than conventional inline mixing units.

Available Static In-Line Mixers

SERIES 250

STAINLESS/STAINLESS
Uses: Two Part Epoxy
Silicones
Polyurethanes
Polyesters

SERIES 250

GLASS/STAINLESS
Laboratory
Contacting
Analytical Testing

SERIES 275

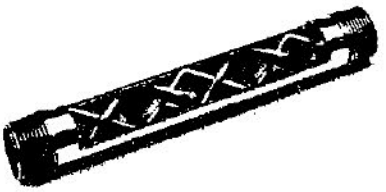

CARBON STEEL/STAINLESS STEEL
Water Treatment
Chemical Blending
Dissolving Gases
Contacting

SERIES 308

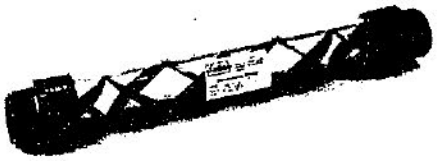

CLEAR PVC
Chemical Feed Systems
Laboratory
Polymer Blending
Flocculant Blending

SERIES 328

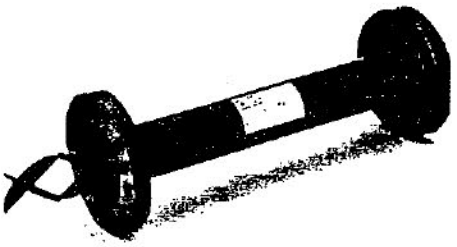

INDUSTRIAL PVC
Chemical Blending
Paint Blending

SERIES 330

SANITARY
Margarine Production
Diluting Concentrates
Salad Dressing
Cheese Production
Milk Processing
Ice Cream Products

SERIES 365

SLUDGE
Polymers
Flocculants
Filter Presses

SERIES 400

PTFE
Corrosives
Nitric Acid
Sulfuric Acid

SERIES 500

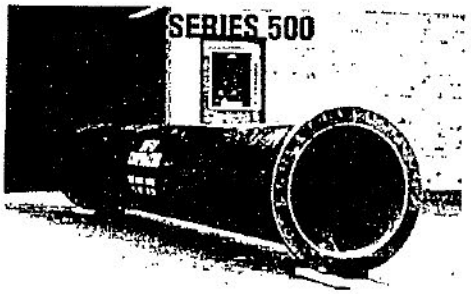

FRP
Potable Water
Waste Water
Chemical Blending

Koflo Static In-Line Mixers Are Available In Standard Modules And Custom Built Units. All Metals And Plastics Are Available For Fabrication.

CALL US AT 1-800-STATICS

U.S. Patent No. 4, 511, 258
Patents Pending.

KOFLO CORPORATION
576 Rock Road
East Dundee, IL 60118
(312) 426-2211
1-800-STATICS
FAX 312-426-2601

er pressure loss than conventional mixers!

To Size A Static In-Line Mixer:

1 Find the Reynolds Number Re.

The Reynolds Number for any mixer can be calculated as follows:

$$Re = \frac{3157QS}{\mu D}$$

2 Find corresponding Re Value in Mixer selection chart for required number of elements.

MIXER SELECTION

Re	ELEMENTS REQUIRED	FLOW
>1000	6	Turbulent Flow
500 - 1000	12	Transitional Flow
10 - 500	18	Laminar Flow
<10	24	Plug Flow

Symbols

Re	=	Reynolds number — dimensionless
Q	=	Flow rate — gallons per minute
S	=	Specific gravity — dimensionless
μ	=	Viscosity — centipoise
D	=	Inside pipe diameter — inches
Δ P	=	Pressure drop — P.S.I.
k	=	Viscosity correction factor for turbulent flow = $\mu^{.06}$
A	=	See Table (A Value)

3 Determine pressure loss by selecting either Turbulent or Laminar formula, whichever applies.

Turbulent Flow occurs — if Re is greater than 1000.

Laminar Flow occurs — if Re is less than 1000.

Turbulent Flow

$$\Delta P = \frac{Q^2Sk}{A} \text{ psi/ 6 elements}$$

Laminar Flow

$$\Delta P = \frac{11.4 \times 10^{-4} Q \mu}{D^3} \text{ psi/ 6 elements}$$

NOMINAL PIPE SIZE	ACTUAL I.D. INCHES	A Value
1/2	.622	2.5
3/4	.824	13
1	1.049	22
1-1/2	1.610	130
2	2.067	383
2-1/2	2.469	658
3	3.068	2,625
4	4.026	7,750
6	6.065	34,500
8	7.981	129,000
10	10.020	337,500

NOTE: If pressure loss is excessive repeat procedure using a larger diameter mixer.

Standard Koflo Mixer Lengths in Inches

NUMBER OF ELEMENTS	PIPE SIZE — SCHEDULE 40										
	1/2	3/4	1	1-1/2	2	2-1/2	3	4	6	8	10
6	5	7	9	13	17	20	25	33	50	65	82
12	10	13	17	26	33	39	49	65	97	127	162
18	15	20	25	38	49	59	73	97	145	190	240
24	20	26	33	51	65	78	97	128	192	252	319

Length's are for general information only

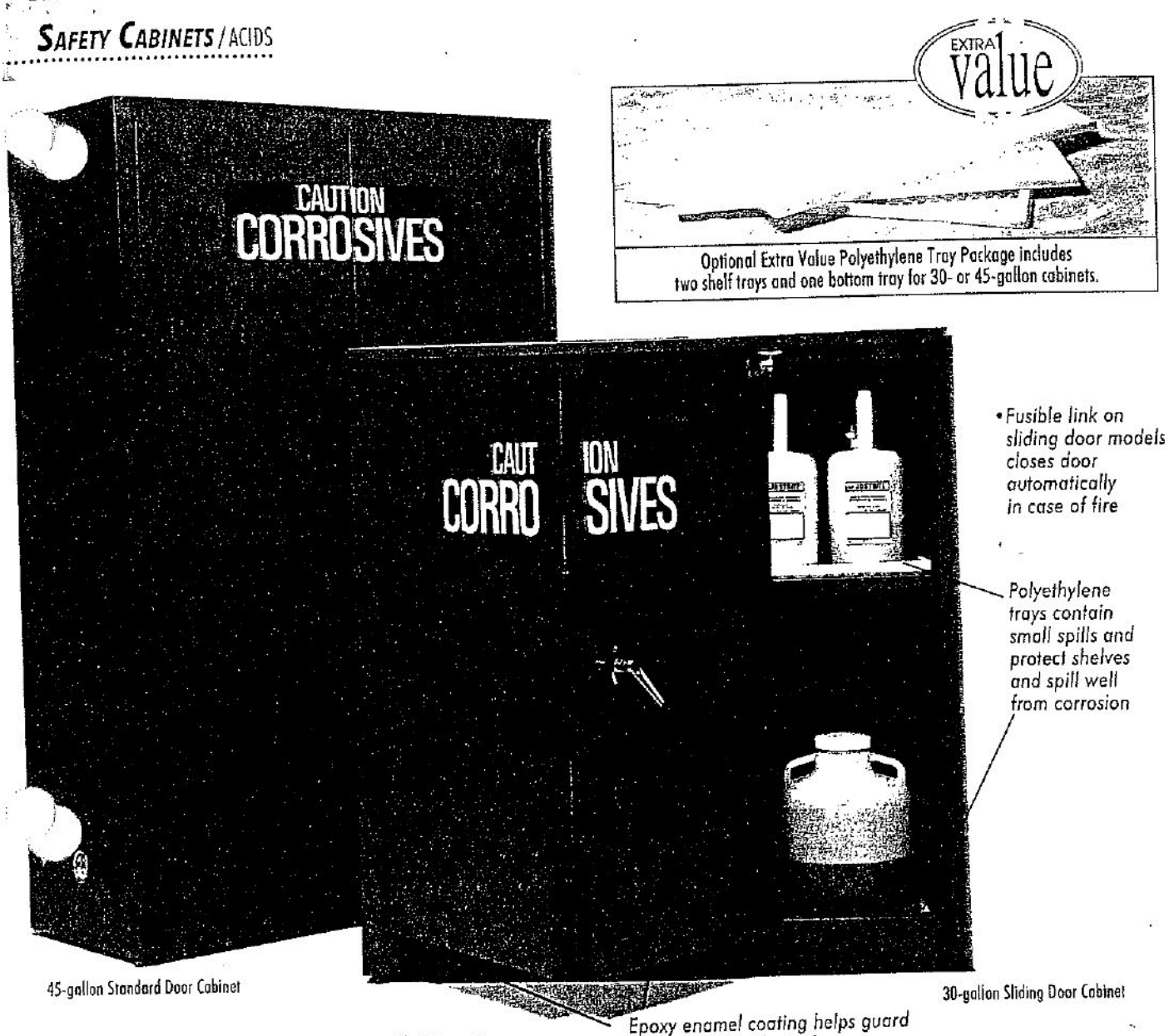

Optional Extra Value Polyethylene Tray Package includes two shelf trays and one bottom tray for 30- or 45-gallon cabinets.

Eagle® Acid Storage Cabinets

Now Offering Our Extra Value Polyethylene Tray Package—Save More Than $65.00!

Tough epoxy enamel coating on the inside and outside of cabinet protects against chemical attack so cabinet lasts longer. Available as a *Standard Two-Door Cabinet* (manual door operation), or as a *Sliding Self-Closing Door Cabinet* with a fusible link that automatically closes the door at 165°F. Choose from 30-, 45- or 60-gallon storage capacities.

Specifications: Double-wall 18-gauge steel frame. Features a 1½" airspace between walls, upper and lower vents, a three-point latch with keylock, and a 2" raised, leakproof sill. For additional protection, each cabinet includes high-density polyethylene trays for each shelf and for the bottom. Each tray resists rust and corrosion while containing up to one gallon of spill. Locking tabs secure trays on shelves. Additional trays available separately. *Extra Value Tray Package* includes two shelf trays and one bottom tray for 30- or 45-gallon cabinets. *Eagle® Self-Closing Adaptor Kit* converts cabinets sold above on page 941 into two-door, self-closing cabinets. Includes plates, drill bits, mechanical system, rods, spring closures, instructions and hardware.

Note: Not suggested for use with nitric and sulfuric acids.

Acid Storage Cabinets

No.	Capacity (gal.)	Door Style	No. of Shelves	O.D. (in.) H x W x D	Shipping Wt. (lbs.)	Each 1	Each 2
7B-2150	30	Standard	1	44 43 18	265	504.45	473.85
7B-2150-3	30	Sliding	1	44 43 18	265	548.75	493.90
7B-2151	45	Standard	2	65 43 18	334	614.80	553.65
7B-2151-2	45	Sliding	2	65 43 18	367	681.40	646.45
7B-10837	60	Standard	2	65 31 31	380	877.20	789.50
7B-10836	60	Sliding	2	65 31 31	380	949.35	854.45

Additional Polyethylene Trays and Metal Shelves

No.	Description	Each 1	Each 2
7B-23531	Extra Value Tray Package (30 or 45 gal.)	63.30	57.00
7B-7905	Bottom Tray (30 or 45 gal.)	43.25	38.95
7B-7906	Shelf Tray (30 or 45 gal.)	43.30	39.00
7B-10838	Bottom Tray (60 gal.)	55.55	50.05
7B-10839	Shelf Tray (60 gal.)	55.60	50.10
7B-7907	Metal Shelf (30 or 45 gal.)	45.70	41.15
7B-10840	Metal Shelf (60 gal.)	78.70	70.85

Eagle® Self-Closing Adaptor Kit

No.	Description	Shipping Wt. (lbs.)	Each
7B-13038	Kits for 15-, 30- or 45-gallon Cabinet	10.2	150.05
7B-23530	Kit for 60-gallon Cabinet	10.2	150.05

US FILTER

Customer: Ames Iowa Interco	Sheet: 3
Location: Grand Canyon Airport	Date: 16-Sep-97
Purchaser's Ref. No.	Quote No:
	Rev. No:

ACS-05496 Automatic Carbon Filter

MEDIA	
Activated Carbon	80 Cu.Ft. per Unit
CONTROLS	
Controller	
Type	Solid State, Programmable
Control Panel	
Enclosure Rating	NEMA 4X
Access	Front
Size (Approximate)	12" H x 10" W x 6" D
Material	Fiberglass
Mounting Location	Piping Manifold
Voltage/Phase/Hertz	120 / 1 / 60
INSTRUMENTS	
Pressure Gauge	
Quantity	Two (2) per Unit
Manufacturer / Model	U.S. Filter
Face Size / Range	2 1/2" / 0-160 psi
Wetted Material	316 SS
Connection	1/4" NPT
Inlet Flow Indicator	
Quantity	N/A
Type	N/A
Differential Pressure Switch	
Quantity	One (1)
Type	Diaphragm
Gauge Isolation / Sample Valve	
Quantity	Two (2)
Type	Manual Ball
Wetted Material	PVC
Size	1/4" NPT
SHIPPING WEIGHT	
Pounds	12860
OPERATING WEIGHT	
Pounds	21800
EQUIPMENT DIMENSIONS	
Height	12'-0"
Width	11'-2"
Depth	6'-4"

Note: Equipment dimensions do not include operating space requirements.

US FILTER

Customer: **Ames Iowa Interco**	Sheet: **2**
Location: **Grand Canyon Airport**	Date: **16-Sep-97**
Purchaser's Ref. No.	Quote No:
	Rev. No:

ACS-05496 Automatic Carbon Filter

PROCESS PIPING

Drawing Reference	D-52.79A
Type	Socket Welded and Flanged
Material	PVC
Pipe Schedule and Rating	Schedule 80
Pre-Assembled	Yes
Line Sizes	
Service Inlet/Outlet	3"
Pressure Reducing Valve on Inlet	N/A
Effluent Sight Strainer	N/A
Steam Clean Option	N/A
Interconnecting Headers	Interconnected inlet, outlet and drain headers
Studs, Nuts, Washers	Carbon Steel, Plated
Gaskets	SBR
Preparation For Shipment	All openings protected and covered

SERVICE VALVES

Valves	
Type	Butterfly
Body Material	Cast Iron
Seat Material	EPDM
Style / Connection	Wafer
Valve Actuator	
Type	Rack & Pinion
Action	AO / AC (AO / SC on PVC ball valves 2" and smaller)
Position Indication	Visual

USFILTER

Customer: Ames Iowa Interco	Sheet: 1
Location: Grand Canyon Airport	Date: 16-Sep-97
Purchaser's Ref. No.	Quote No:
	Rev. No:

ACS-05496 Automatic Carbon Filter

DRAWING REFERENCE	D-52.79A

SERVICE CONDITIONS

Type of System	Duplex
Primary Application	Organics Removal
Process Liquid	Water
Design Service Flow Rate, GPM	155 gpm per vessel
Design Linear Velocity	10.0 gpm/sq.ft.
System press. drop @ 10.0 gpm/sq.ft.	11.0 psi
Backwash Flow Rate	155 gpm @ 70°F
Operating Pressure Range	45-95 psi ± 5 psi
Operating Temperature Range	45°F - 105°F
Maximum Feedwater Turbidity	≤ 5.0 NTU
Maximum Feedwater Organics	0.5 ppm Oxygen Consumed **
Maximum Feedwater Chlorine	10 ppm as Cl_2

** Higher organic loads may be effectively removed at lower flow rates. Contact factory for guidance.

VESSEL DESIGN

Quantity	Two (2)
Design Pressure/Temperature	100 PSIG / 120°F
ASME Code And Stamp	Yes
Head Design	High Crown
Shell Diameter	54"
Shell Straight Side	96"
Shell Material	Carbon Steel
Media Support/Unit	Graded Quartz : 11 ft³ ½ × ¼, 4 ft³ ¼ × ⅛, 4 ft³ #4
Manway	One (1) 18" Round
Structural Skid	Included
Internal Coating	
Surface Preparation	SSPC-SP 5
Interior Lining	White Epoxy Phenolic
External Coating	
Surface Preparation	SSPC-SP 6 Commercial Sandblast
Primer	Safety Blue Epoxy Phenolic
Thermal Relief Valve	One (1) per vessel
Upper Distributor (Inlet)	
Type	Hub Radial
Material	PVC
Lower Distributor (Outlet)	
Type	Hub-Radial
Material	PVC

ProMinent

Operating Instructions

Metering Pump

ProMinent® gamma G/5b

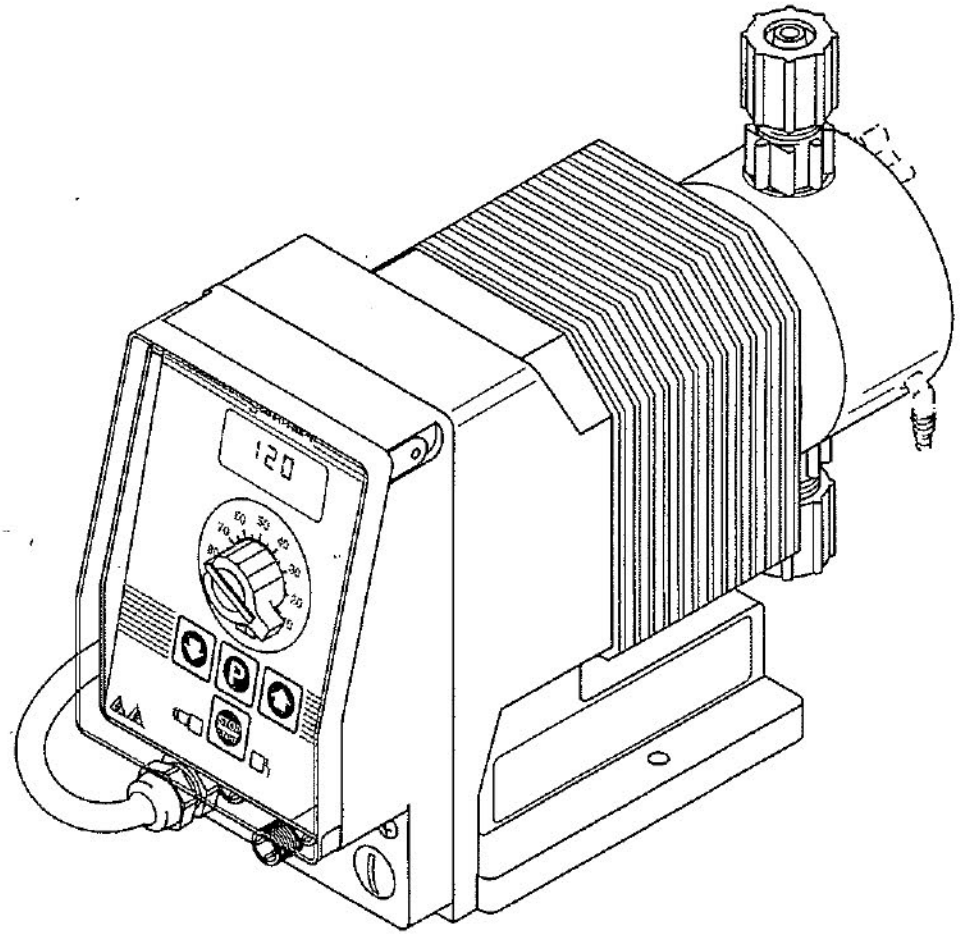

Read the operating instructions from cover to cover! • Do not throw them away!

The warranty does not cover damages due to faulty operation!

ProMinent Fluid Controls Inc.
Pittsburgh PA 412/787-2484

EXPLODED VIEW

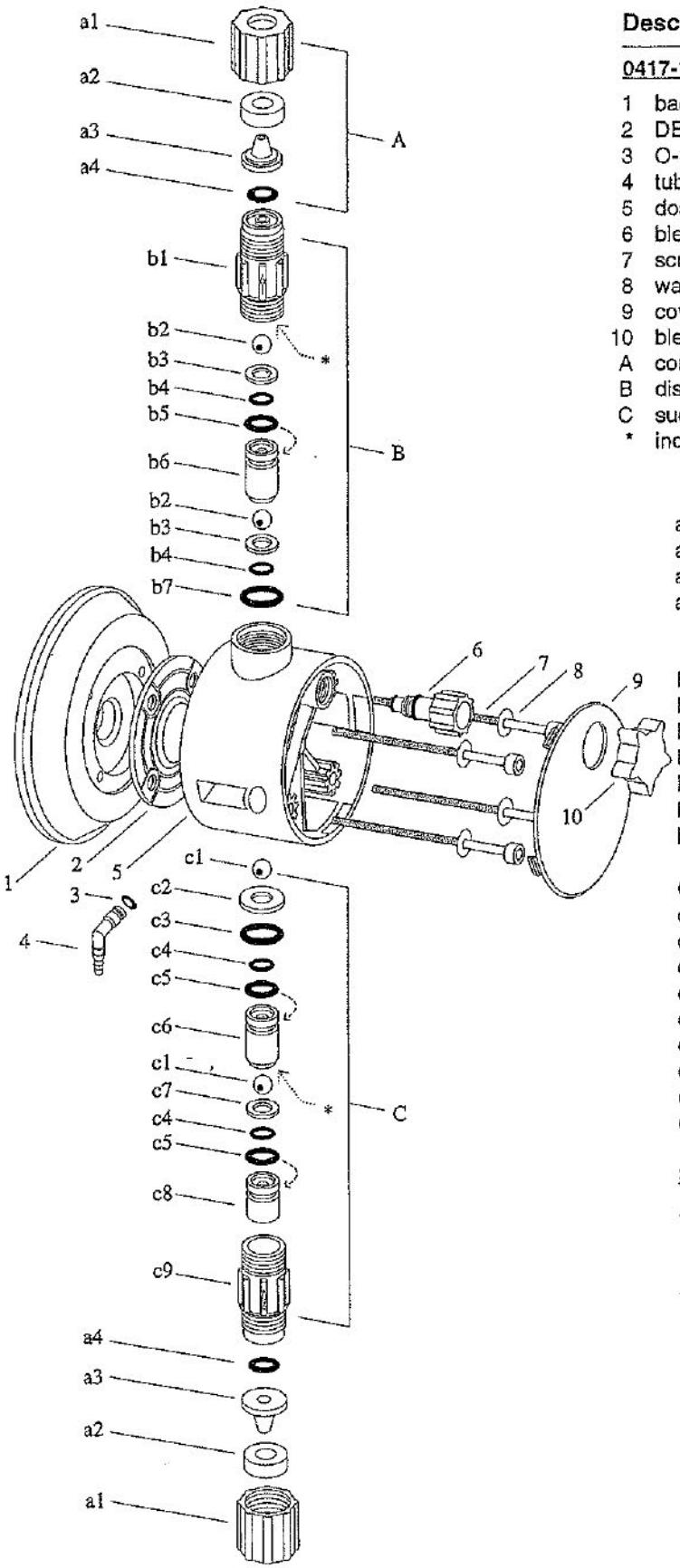

	Description	Qty.	Part No.
	0417-1 PP1 liquid end complete	**1**	**910828.3**
1	backplate g0417 (blue)	1	800769.2
2	DEVELOPAN diaphragm	1	811459.7
3	O-ring 3.68 x 1.78 EPDM	1	480403.5
4	tube nozzle bypass PP	1	800613.2
5	dosing head body only 0417 PP	1	800668.6
6	bleed valve complete EPDM	1	809490.6
7	screw M5 x 60	4	468077.3
8	washer	4	462228.8
9	cover plate with print PP	1	800673.6
10	bleed valve knob PP	1	800832.8
A	connector set 1/2" PP1	1	817155.5
B	discharge valve g/b 1/2" PP1	1	809438.5
C	suction valve g/b 1/2" PP1	1	809439.3
*	indicates location of spring if needed		
	A connector set 1/2" PP1	**1**	**817155.5**
a1	union nut M20 x 1.5 PP	2	800608.2
a2	clamp ring 1/2" PP	2	800619.9
a3	tube nozzle 3/8" PP	2	800627.2
a4	O-ring 9 x 2.5 EPDM	2	791495.5
	B discharge valve g/b 1/2" PP1	**1**	**809438.5**
b1	dis. valve body g/b 1/2" PP	1	800670.2
b2	valve ball 9.2mm Ceramic	2	404281.8
b3	ball seat disc PP	2	140754.3
b4	O-ring 7.65 x 1.78 EPDM	2	480408.4
b5	O-ring 8.3 x 2.4 EPDM	1	480409.2
b6	valve insert 9.2 x 23 PP	1	800623.1
b7	O-ring 13 x 2.5 EPDM	1	480417.5
	C suction valve g/b 1/2" PP1	**1**	**809439.3**
c1	valve ball 9.2mm Ceramic	2	404281.8
c2	ball seat disc (suction) PP	1	811533.9
c3	O-ring 13 x 2.5 EPDM	1	480417.5
c4	O-ring 7.65 x 1.78 EPDM	2	480408.4
c5	O-ring 8.3 x 2.4 EPDM	2	480409.2
c6	valve insert 9.2 x 23 PP	1	800623.1
c7	ball seat disc PP	1	140754.3
c8	valve insert 13 x 18 PP	1	800621.5
c9	suct. valve body g/b PP	1	800671.0
	Spare Parts Set 0417-1 PP1	**1**	**910976.0**
A	connector set 1/2" PP1	1	817155.5
B	dis. valve g/b 1/2" PP1	1	809438.5
C	suction valve g/b 1/2" PP1	1	809439.3
2	DEVELOPAN diaphragm	1	811459.7
c1	valve ball 9.2mm Ceramic	2	404281.8
c2	ball seat disc (suction) PP	1	811533.9
c3	O-ring 13 x 2.5 EPDM	2	480417.5
c4	O-ring 7.65 x 1.78 EPDM	4	480408.4
c5	O-ring 8.3 x 2.4 EPDM	3	480409.2
c7	ball seat disc PP	3	140754.3

#G5B7PP1-1/97NA

ProMinent Fluid Controls, Inc.
136 Industry Drive
R.I.D.C. Park West
Pittsburgh, PA 15275 USA
Tel.: 412/787-2484
Fax: 412/787-0704

ProMinent Fluid Controls Ltd.
490 Southgate Drive
Guelph, Ontario
N1G 4P5 (Canada)
Tel.: 519/836-5692
Fax: 519/836-5226

12 Operation

12.1 Explanation of the operating and display elements

12.1.1 Display

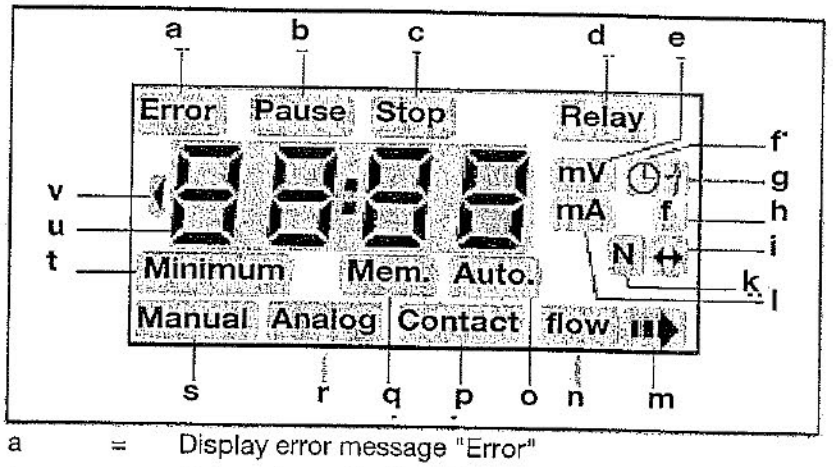

a	=	Display error message "Error"
b	=	Pump stopped using "Pause" control function
c	=	Pump stopped manually with key (7)
d	=	Display "Relay" is activated (with relay option only)
e	=	Voltage range selection "mV" or "V" (with analog option only)
f	=	Display of the time
fg	=	Timer operation ◷-ϟ (with timer option only)
h	=	Display of the stroking rate or "E" in "Contact" operation
i + k	=	display of the pulse step-up or step-down ratio (with pulse multiplier/divider option only)
k	=	Stroke count "N"
l	=	Signal range selection "mA" (with analog option only)
m	=	Saving new settings
n	=	Activating metering monitor "flow" (with optional metering monitor only)
o + c	=	Display for automatic pump stop in timer operation (with timer option only)
p	=	Pump set to "Contact" operation
q	=	Display memory operation "mem" (with pulse multiplier/ divider option only)
r	=	Pump set to "Analog" operation (with analog option only)
s	=	Pump set to "Manual" operation
t	=	Display for lack of chemical "Minimum" (precondition: float switch connected)
u	=	Display of the number values set
v	=	Display for excess stroke counting and for switch-off time "ϟ" (with pulse multiplier/divider or timer options only)
a + i	=	No power supply to the metering pump, error in the data transfer line (Remote Control)

APPENDIX A.2

Safe Drink Water Act Summary and Statute, US Environmental Protection Agency

Appendix 4.2.1

Safe Drinking Water Act Summary and Statute

Understanding the Safe Drinking Water Act

SAFE DRINKING WATER ACT • 1974-2004 • PROTECT OUR HEALTH FROM SOURCE TO TAP

The Safe Drinking Water Act (SDWA) was originally passed by Congress in 1974 to protect public health by regulating the nation's public drinking water supply.

The law was amended in 1986 and 1996 and requires many actions to protect drinking water and its sources—rivers, lakes, reservoirs, springs, and ground water wells. (SDWA does not regulate private wells which serve fewer than 25 individuals.)

SDWA authorizes the United States Environmental Protection Agency (US EPA) to set national health-based standards for drinking water to protect against both naturally-occurring and man-made contaminants that may be found in drinking water. US EPA, states, and water systems then work together to make sure that these standards are met.

Millions of Americans receive high quality drinking water every day from their public water systems, (which may be publicly or privately owned). Nonetheless, drinking water safety cannot be taken for granted.

There are a number of threats to drinking water: improperly disposed of chemicals; animal wastes; pesticides; human threats; wastes injected underground; and naturally-occurring substances can all contaminate drinking water.

Likewise, drinking water that is not properly treated or disinfected, or which travels through an improperly maintained distribution system, may also pose a health risk.

Originally, SDWA focused primarily on treatment as the means of providing safe drinking water at the tap. The 1996 amendments greatly enhanced the existing law by recognizing source water protection, operator training, funding for water system improvements, and public information as important components of safe drinking water. This approach ensures the quality of drinking water by protecting it from source to tap.

All public water systems must have at least 15 service connections or serve at least 25 people per day for 60 days of the year.

Drinking water standards apply to water systems differently based on their type and size:

Community Water System (there are approximately 54,000) - A public water system that serves the same people year-round. Most residences including homes, apartments, and condominiums in cities, small towns, and mobile home parks are served by Community Water Systems.

Non-Community Water System - A public water system that serves the public but does not serve the same people year-round. There are two types of non-community systems:

Non-Transient Non-Community Water System (there are approximately 20,000) - A noncommunity water system that serves the same people more than six months per year, but not year-round, for example, a school with its own water supply is considered a non-transient system.

Transient non-community water system (there are approximately 89,000) - A non-community water system that serves the public but not the same individuals for more than six months, for example, a rest area or campground may be considered a transient water system.

1996 SDWA Amendment Highlights:

Consumer Confidence Reports All community water systems must prepare and distribute annual reports about the water they provide, including information on detected contaminants, possible health effects, and the water's source.

Cost-Benefit Analysis US EPA must conduct a thorough cost-benefit analysis for every new standard to determine whether the benefits of a drinking water standard justify the costs.

Drinking Water State Revolving Fund States can use this fund to help water systems make infrastructure or management improvements or to help systems assess and protect their source water.

Microbial Contaminants and Disinfection Byproducts US EPA is required to strengthen protection for microbial contaminants, including Cryptosporidium, while strengthening control over the byproducts of chemical disinfection. The Stage 1 Disinfectants and Disinfection Byproducts Rule and the Interim Enhanced Surface Water Treatment Rule together address these risks.

Operator Certification Water system operators must be certified to ensure that systems are operated safely. US EPA issued guidelines in February 1999 specifying minimum standards for the certification and recertification of the operators of community and non-transient, noncommunity water systems. These guidelines apply to state Operator Certification Programs. All states are currently implementing EPA-approved operator certification programs.

Public Information & Consultation SDWA emphasizes that consumers have a right to know what is in their drinking water, where it comes from, how it is treated, and how to help protect it. US EPA distributes public information materials (through its Safe Drinking Water Hotline, Safewater web site, and Water Resource Center) and holds public meetings, working with states, tribes, water systems, and environmental and civic groups, to encourage public involvement.

Small Water Systems Small water systems are given special consideration and resources under SDWA, to make sure they have the managerial, financial, and technical ability to comply with drinking water standards.

Source Water Assessment Programs Every state must conduct an assessment of its sources of drinking water (rivers, lakes, reservoirs, springs, and ground water wells) to identify significant potential sources of contamination and to determine how susceptible the sources are to these threats.

Roles and Responsibilities:

SDWA applies to every public water system in the United States. There are currently more than 170,000 public water systems providing water to almost all Americans at some time in their lives. The responsibility for making sure these public water systems provide safe drinking water is divided among US EPA, states, tribes, water systems, and the public. SDWA provides a framework in which these parties work together to protect this valuable resource.

US EPA sets national standards for drinking water based on sound science to protect against health risks, considering available technology and costs. These National Primary Drinking Water Regulations set enforceable maximum contaminant levels for particular contaminants in drinking water or required ways to treat water to remove contaminants. Each standard also includes requirements for water systems to test for contaminants in the water to make sure standards are achieved. In addition to setting these standards, US EPA provides guidance, assistance, and public information about drinking water, collects drinking water data, and oversees state drinking water programs.

The most direct oversight of water systems is conducted by state drinking water programs. States can apply to US EPA for "primacy," the authority to implement SDWA within their jurisdictions, if they can show that they will adopt standards at least as stringent as US EPA's and make sure water systems meet these standards. All states and territories, except Wyoming and the District of Columbia, have received primacy. While no Indian tribe has yet applied for and received primacy, four tribes currently receive "treatment as a state" status, and are eligible for

primacy. States, or US EPA acting as a primacy agent, make sure water systems test for contaminants, review plans for water system improvements, conduct on-site inspections and sanitary surveys, provide training and technical assistance, and take action against water systems not meeting standards.

To ensure that drinking water is safe, SDWA sets up multiple barriers against pollution. These barriers include: source water protection, treatment, distribution system integrity, and public information. Public water systems are responsible for ensuring that contaminants in tap water do not exceed the standards. Water systems treat the water, and must test their water frequently for specified contaminants and report the results to states. If a water system is not meeting these standards, it is the water supplier's responsibility to notify its customers. Many water suppliers now are also required to prepare annual reports for their customers. The public is responsible for helping local water suppliers to set priorities, make decisions on funding and system improvements, and establish programs to protect drinking water sources. Water systems across the nation rely on citizen advisory committees, rate boards, volunteers, and civic leaders to actively protect this resource in every community in America.

Protection & Prevention:

Essential components of safe drinking water include protection and prevention. States and water suppliers must conduct assessments of water sources to see where they may be vulnerable to contamination. Water systems may also voluntarily adopt programs to protect their watershed or wellhead, and states can use legal authorities from other laws to prevent pollution. SDWA mandates that states have programs to certify water system operators and make sure that new water systems have the technical, financial, and managerial capacity to provide safe drinking water. SDWA also sets a framework for the Underground Injection Control (UIC) program to control the injection of wastes into ground water. US EPA and states implement the UIC program, which sets standards for safe waste injection practices and bans certain types of injection altogether. All of these programs help prevent the contamination of drinking water.

US EPA sets primary drinking water standards through a three-step process:

First, US EPA identifies contaminants that may adversely affect public health and occur in drinking water with a frequency and at levels that pose a threat to public health. US EPA identifies these contaminants for further study, and determines contaminants to potentially regulate. Second, US EPA determines a maximum contaminant level goal for contaminants it decides to regulate. This goal is the level of a contaminant in drinking water below which there is no known or expected risk to health. These goals allow for a margin of safety. Third, US EPA specifies a maximum contaminant level, the maximum permissible level of a contaminant in drinking water which is delivered to any user of a public water system. These levels are enforceable standards, and are set as close to the goals as feasible. SDWA defines feasible as the level that may be achieved with the use of the best technology, treatment techniques, and other means which US EPA finds (after examination for efficiency under field conditions) are available, taking cost into consideration. When it is not economically or technically feasible to set a maximum level, or when there is no reliable or economic method to detect contaminants in the water, US EPA instead sets a required Treatment Technique which specifies a way to treat the water to remove contaminants.

Setting National Drinking Water Standards:

US EPA sets national standards for tap water which help ensure consistent quality in our nation's water supply. US EPA prioritizes contaminants for potential regulation based on risk and how often they occur in water supplies. (To aid in this effort, certain water systems monitor for the presence of contaminants for which no national standards currently exist and collect information on their occurrence). US EPA sets a health goal based on risk (including risks to the most sensitive people, e.g., infants, children, pregnant women, the elderly, and the immuno-compromised). US EPA then sets a legal limit for the contaminant in drinking water or a required treatment technique—this limit or treatment technique is set to be as close to the health goal as

feasible. US EPA also performs a cost-benefit analysis and obtains input from interested parties when setting standards. US EPA is currently evaluating the risks from several specific health concerns, including: microbial contaminants (e.g., *Cryptosporidium*); the byproducts of drinking water disinfection; radon; arsenic; and water systems that don't currently disinfect their water but get it from a potentially vulnerable ground water source.

Funding and Assistance:

US EPA provides grants to implement state drinking water programs, and to help each state set up a special fund to assist public water systems in financing the costs of improvements (called the drinking water state revolving fund). Small water systems are given special consideration, since small systems may have a more difficult time paying for system improvements due to their smaller customer base. Accordingly, US EPA and states provide them with extra assistance (including training and funding) as well as allowing, on a caseby- case basis, alternate water treatments that are less expensive, but still protective of public health.

Compliance and Enforcement:

National drinking water standards are legally enforceable, which means that both US EPA and states can take enforcement actions against water systems not meeting safety standards. US EPA and states may issue administrative orders, take legal actions, or fine utilities. US EPA and states also work to increase water systems. understanding of, and compliance with, standards.

Public Information:

SDWA recognizes that since everyone drinks water, everyone has the right to know what's in it and where it comes from. All water suppliers must notify consumers quickly when there is a serious problem with water quality. Water systems serving the same people year-round must provide annual consumer confidence reports on the source and quality of their tap water. States and US EPA must prepare annual summary reports of water system compliance with drinking water safety standards and make these reports available to the public. The public must have a chance to be involved in developing source water assessment programs, state plans to use drinking water state revolving loan funds, state capacity development plans, and state operator certification programs.

For More Information:

To learn more about the Safe Drinking Water Act or drinking water in general, call the Safe Drinking Water Hotline at 1-800-426-4791, or visit US EPA's Office of Ground Water and Drinking Water web site: *www.epa.gov/safewater*.

organizations reporting any such transactions under subsection (a)(3) of this section.

(e) Repealed. Pub. L. 99–660, title VIII, § 810, Nov. 14, 1986, 100 Stat. 3801

(f) Rates

Nothing in this section shall be construed to confer upon the Secretary any authority to approve or disapprove the rates charged by any health maintenance organization.

(g) Annual financial statement

Any health maintenance organization failing to file with the Secretary the annual financial statement required in subsection (a) of this section shall be ineligible for any Federal assistance under this subchapter until such time as such statement is received by the Secretary and shall not be a qualified health maintenance organization for purposes of section 300e–9 of this title.

(h) Penalties

Whoever knowingly and willfully makes or causes to be made any false statement or representation of a material fact in any statement filed pursuant to this section shall be guilty of a felony and upon conviction thereof shall be fined not more than $25,000 or imprisoned for not more than five years, or both.

(July 1, 1944, ch. 373, title XIII, § 1318, as added Pub. L. 95–559, § 9(a), Nov. 1, 1978, 92 Stat. 2135; amended Pub. L. 97–35, title IX, § 948, Aug. 13, 1981, 95 Stat. 577; Pub. L. 99–660, title VIII, § 810, Nov. 14, 1986, 100 Stat. 3801; Pub. L. 108–173, title IX, § 900(e)(2)(E), Dec. 8, 2003, 117 Stat. 2372.)

AMENDMENTS

2003—Subsec. (a)(2). Pub. L. 108–173 substituted "Centers for Medicare & Medicaid Services" for "Health Care Financing Administration".

1986—Subsec. (e). Pub. L. 99–660 struck out subsec. (e) which read as follows: "The Secretary shall file an annual report with the Congress on the operation of this section. Such report shall include—

"(1) an enumeration of standards and norms utilized to make the evaluations required under subsection (d) of this section;

"(2) an assessment of the degree of conformity or nonconformity of each health maintenance organization evaluated by the Secretary under subsection (d) of this section with such standards and norms;

"(3) what action, if any, the Secretary considers necessary under section 300e–11 of this title with respect to health maintenance organizations evaluated under subsection (d) of this section."

1981—Subsec. (a). Pub. L. 97–35, § 948(a), (b), in par. (2) inserted reference to copy of the report, if any, filed with the Health Care Financing Administration, and in par. (3)(B) reorganized excluding provisions and, among revisions, inserted salaries paid to employees for services.

Subsec. (b)(1). Pub. L. 97–35, § 948(c), inserted "responsible for management or administration" after "employee".

Subsec. (b)(4). Pub. L. 97–35, § 948(d), substituted "spouse, child, or parent" for "member of the immediate family".

EFFECTIVE DATE OF 1986 AMENDMENT

Amendment by Pub. L. 99–660 effective Oct. 1, 1985, see section 815(a) of Pub. L. 99–660, set out as an Effective and Termination Dates of 1986 Amendment note under section 300e–1 of this title.

SUBCHAPTER XII—SAFETY OF PUBLIC WATER SYSTEMS

PART A—DEFINITIONS

§ 300f. Definitions

For purposes of this subchapter:

(1) The term "primary drinking water regulation" means a regulation which—

(A) applies to public water systems;

(B) specifies contaminants which, in the judgment of the Administrator, may have any adverse effect on the health of persons;

(C) specifies for each such contaminant either—

(i) a maximum contaminant level, if, in the judgment of the Administrator, it is economically and technologically feasible to ascertain the level of such contaminant in water in public water systems, or

(ii) if, in the judgment of the Administrator, it is not economically or technologically feasible to so ascertain the level of such contaminant, each treatment technique known to the Administrator which leads to a reduction in the level of such contaminant sufficient to satisfy the requirements of section 300g–1 of this title; and

(D) contains criteria and procedures to assure a supply of drinking water which dependably complies with such maximum contaminant levels; including accepted methods for quality control and testing procedures to insure compliance with such levels and to insure proper operation and maintenance of the system, and requirements as to (i) the minimum quality of water which may be taken into the system and (ii) siting for new facilities for public water systems.

At any time after promulgation of a regulation referred to in this paragraph, the Administrator may add equally effective quality control and testing procedures by guidance published in the Federal Register. Such procedures shall be treated as an alternative for public water systems to the quality control and testing procedures listed in the regulation.

(2) The term "secondary drinking water regulation" means a regulation which applies to public water systems and which specifies the maximum contaminant levels which, in the judgment of the Administrator, are requisite to protect the public welfare. Such regulations may apply to any contaminant in drinking water (A) which may adversely affect the odor or appearance of such water and consequently may cause a substantial number of the persons served by the public water system providing such water to discontinue its use, or (B) which may otherwise adversely affect the public welfare. Such regulations may vary according to geographic and other circumstances.

(3) The term "maximum contaminant level" means the maximum permissible level of a contaminant in water which is delivered to any user of a public water system.

(4) PUBLIC WATER SYSTEM.—

(A) IN GENERAL.—The term "public water system" means a system for the provision to

the public of water for human consumption through pipes or other constructed conveyances, if such system has at least fifteen service connections or regularly serves at least twenty-five individuals. Such term includes (i) any collection, treatment, storage, and distribution facilities under control of the operator of such system and used primarily in connection with such system, and (ii) any collection or pretreatment storage facilities not under such control which are used primarily in connection with such system.

(B) CONNECTIONS.—

(i) IN GENERAL.—For purposes of subparagraph (A), a connection to a system that delivers water by a constructed conveyance other than a pipe shall not be considered a connection, if—

(I) the water is used exclusively for purposes other than residential uses (consisting of drinking, bathing, and cooking, or other similar uses);

(II) the Administrator or the State (in the case of a State exercising primary enforcement responsibility for public water systems) determines that alternative water to achieve the equivalent level of public health protection provided by the applicable national primary drinking water regulation is provided for residential or similar uses for drinking and cooking; or

(III) the Administrator or the State (in the case of a State exercising primary enforcement responsibility for public water systems) determines that the water provided for residential or similar uses for drinking, cooking, and bathing is centrally treated or treated at the point of entry by the provider, a pass-through entity, or the user to achieve the equivalent level of protection provided by the applicable national primary drinking water regulations.

(ii) IRRIGATION DISTRICTS.—An irrigation district in existence prior to May 18, 1994, that provides primarily agricultural service through a piped water system with only incidental residential or similar use shall not be considered to be a public water system if the system or the residential or similar users of the system comply with subclause (II) or (III) of clause (i).

(C) TRANSITION PERIOD.—A water supplier that would be a public water system only as a result of modifications made to this paragraph by the Safe Drinking Water Act Amendments of 1996 shall not be considered a public water system for purposes of the Act until the date that is two years after August 6, 1996. If a water supplier does not serve 15 service connections (as defined in subparagraphs (A) and (B)) or 25 people at any time after the conclusion of the 2-year period, the water supplier shall not be considered a public water system.

(5) The term "supplier of water" means any person who owns or operates a public water system.

(6) The term "contaminant" means any physical, chemical, biological, or radiological substance or matter in water.

(7) The term "Administrator" means the Administrator of the Environmental Protection Agency.

(8) The term "Agency" means the Environmental Protection Agency.

(9) The term "Council" means the National Drinking Water Advisory Council established under section 300j–5 of this title.

(10) The term "municipality" means a city, town, or other public body created by or pursuant to State law, or an Indian Tribe.

(11) The term "Federal agency" means any department, agency, or instrumentality of the United States.

(12) The term "person" means an individual, corporation, company, association, partnership, State, municipality, or Federal agency (and includes officers, employees, and agents of any corporation, company, association, State, municipality, or Federal agency).

(13)(A) Except as provided in subparagraph (B), the term "State" includes, in addition to the several States, only the District of Columbia, Guam, the Commonwealth of Puerto Rico, the Northern Mariana Islands, the Virgin Islands, American Samoa, and the Trust Territory of the Pacific Islands.

(B) For purposes of section 300j–12 of this title, the term "State" means each of the 50 States, the District of Columbia, and the Commonwealth of Puerto Rico.

(14) The term "Indian Tribe" means any Indian tribe having a Federally recognized governing body carrying out substantial governmental duties and powers over any area. For purposes of section 300j–12 of this title, the term includes any Native village (as defined in section 1602(c) of title 43).

(15) COMMUNITY WATER SYSTEM.—The term "community water system" means a public water system that—

(A) serves at least 15 service connections used by year-round residents of the area served by the system; or

(B) regularly serves at least 25 year-round residents.

(16) NONCOMMUNITY WATER SYSTEM.—The term "noncommunity water system" means a public water system that is not a community water system.

(July 1, 1944, ch. 373, title XIV, § 1401, as added Pub. L. 93–523, § 2(a), Dec. 16, 1974, 88 Stat. 1660; amended Pub. L. 94–317, title III, § 301(b)(2), June 23, 1976, 90 Stat. 707; Pub. L. 94–484, title IX, § 905(b)(1), Oct. 12, 1976, 90 Stat. 2325; Pub. L. 95–190, § 8(b), Nov. 16, 1977, 91 Stat. 1397; Pub. L. 99–339, title III, § 302(b), June 19, 1986, 100 Stat. 666; Pub. L. 104–182, title I, § 101(a), (b)(1), Aug. 6, 1996, 110 Stat. 1615, 1616.)

REFERENCES IN TEXT

The Safe Drinking Water Act Amendments of 1996, referred to in par. (4)(C), is Pub. L. 104–182, Aug. 6, 1996, 110 Stat. 1613. For complete classification of this Act to the Code, see Short Title of 1996 Amendment note set out under section 201 of this title and Tables.

AMENDMENTS

1996—Par. (1). Pub. L. 104–182, § 101(a)(1)(B), inserted at end "At any time after promulgation of a regulation

referred to in this paragraph, the Administrator may add equally effective quality control and testing procedures by guidance published in the Federal Register. Such procedures shall be treated as an alternative for public water systems to the quality control and testing procedures listed in the regulation."

Par. (1)(D). Pub. L. 104–182, § 101(a)(1)(A), inserted "accepted methods for" before "quality control".

Par. (4). Pub. L. 104–182, § 101(b)(1), designated existing provisions as subpar. (A), inserted par. and subpar. headings, redesignated former subpars. (A) and (B) as cls. (i) and (ii), respectively, substituted "water for human consumption through pipes or other constructed conveyances" for "piped water for human consumption" in first sentence, and added subpars. (B) and (C).

Par. (13). Pub. L. 104–182, § 101(a)(2), designated existing provisions as subpar. (A), substituted "Except as provided in subparagraph (B), the term" for "The term", and added subpar. (B).

Par. (14). Pub. L. 104–182, § 101(a)(3), inserted at end "For purposes of section 300j–12 of this title, the term includes any Native village (as defined in section 1602(c) of title 43)."

Pars. (15), (16). Pub. L. 104–182, § 101(a)(4), added pars. (15) and (16).

1986—Par. (10). Pub. L. 99–339, § 302(b)(2), substituted "Indian Tribe" for "Indian tribal organization authorized by law".

Par. (14). Pub. L. 99–339, § 302(b)(1), added par. (14).

1977—Par. (12). Pub. L. 95–190 expanded definition of "person" to include Federal agency, and officers, employees, and agents of any corporation, company, etc.

1976—Par. (13). Pub. L. 94–484 defined "State" to include Northern Mariana Islands.

Pub. L. 94–317 added par. (13).

EFFECTIVE DATE OF 1996 AMENDMENT

Section 2(b) of Pub. L. 104–182 provided that: "Except as otherwise specified in this Act [enacting sections 300g–7 to 300g–9, 300h–8, 300j–3c, and 300j–12 to 300j–18 of this title and section 1263a of Title 33, Navigation and Navigable Waters, amending this section, sections 300g–1 to 300g–6, 300h, 300h–5 to 300h–7, 300i, 300i–1, 300j to 300j–2, 300j–4 to 300j–8, 300j–11, and 300j–21 to 300j–25 of this title, sections 4701 and 4721 of Title 16, Conservation, and section 349 of Title 21, Food and Drugs, repealing section 13551 of this title, enacting provisions set out as notes under this section, sections 201, 300g–1, 300j–1, and 300j–12 of this title, section 1281 of Title 33, and section 45 of former Title 40, Public Buildings, Property, and Works, and amending provisions set out as a note under section 201 of this title] or in the amendments made by this Act, this Act and the amendments made by this Act shall take effect on the date of enactment of this Act [Aug. 6, 1996]."

SHORT TITLE

This subchapter is known as the "Safe Drinking Water Act", see note set out under section 201 of this title.

TERMINATION OF TRUST TERRITORY OF THE PACIFIC ISLANDS

For termination of Trust Territory of the Pacific Islands, see note set out preceding section 1681 of Title 48, Territories and Insular Possessions.

EFFECT OF PUBLIC LAW 104–182 ON FEDERAL WATER POLLUTION CONTROL ACT

Section 2(c) of Pub. L. 104–182 provided that: "Except for the provisions of section 302 [42 U.S.C. 300j–12 note] (relating to transfers of funds), nothing in this Act [see Effective Date of 1996 Amendment note above] or in any amendments made by this Act to title XIV of the Public Health Service Act [this subchapter] (commonly known as the 'Safe Drinking Water Act') or any other law shall be construed by the Administrator of the Environmental Protection Agency or the courts as affecting, modifying, expanding, changing, or altering—

"(1) the provisions of the Federal Water Pollution Control Act [33 U.S.C. 1251 et seq.];

"(2) the duties and responsibilities of the Administrator under that Act; or

"(3) the regulation or control of point or nonpoint sources of pollution discharged into waters covered by that Act.

The Administrator shall identify in the agency's annual budget all funding and full-time equivalents administering such title XIV separately from funding and staffing for the Federal Water Pollution Control Act."

CONGRESSIONAL FINDINGS

Section 3 of Pub. L. 104–182 provided that: "The Congress finds that—

"(1) safe drinking water is essential to the protection of public health;

"(2) because the requirements of the Safe Drinking Water Act (42 U.S.C. 300f et seq.) now exceed the financial and technical capacity of some public water systems, especially many small public water systems, the Federal Government needs to provide assistance to communities to help the communities meet Federal drinking water requirements;

"(3) the Federal Government commits to maintaining and improving its partnership with the States in the administration and implementation of the Safe Drinking Water Act;

"(4) States play a central role in the implementation of safe drinking water programs, and States need increased financial resources and appropriate flexibility to ensure the prompt and effective development and implementation of drinking water programs;

"(5) the existing process for the assessment and selection of additional drinking water contaminants needs to be revised and improved to ensure that there is a sound scientific basis for setting priorities in establishing drinking water regulations;

"(6) procedures for assessing the health effects of contaminants establishing drinking water standards should be revised to provide greater opportunity for public education and participation;

"(7) in considering the appropriate level of regulation for contaminants in drinking water, risk assessment, based on sound and objective science, and benefit-cost analysis are important analytical tools for improving the efficiency and effectiveness of drinking water regulations to protect human health;

"(8) more effective protection of public health requires—

"(A) a Federal commitment to set priorities that will allow scarce Federal, State, and local resources to be targeted toward the drinking water problems of greatest public health concern;

"(B) maximizing the value of the different and complementary strengths and responsibilities of the Federal and State governments in those States that have primary enforcement responsibility for the Safe Drinking Water Act; and

"(C) prevention of drinking water contamination through well-trained system operators, water systems with adequate managerial, technical, and financial capacity, and enhanced protection of source waters of public water systems;

"(9) compliance with the requirements of the Safe Drinking Water Act continues to be a concern at public water systems experiencing technical and financial limitations, and Federal, State, and local governments need more resources and more effective authority to attain the objectives of the Safe Drinking Water Act; and

"(10) consumers served by public water systems should be provided with information on the source of the water they are drinking and its quality and safety, as well as prompt notification of any violation of drinking water regulations."

GAO STUDY

Pub. L. 104–182, title I, § 101(b)(2), Aug. 6, 1996, 110 Stat. 1617, provided that: "The Comptroller General of the United States shall undertake a study to—

"(A) ascertain the numbers and locations of individuals and households relying for their residential water needs, including drinking, bathing, and cooking (or other similar uses) on irrigation water systems, mining water systems, industrial water systems, or other water systems covered by section 1401(4)(B) of the Safe Drinking Water Act [par. (4)(B) of this section] that are not public water systems subject to the Safe Drinking Water Act [this subchapter];

"(B) determine the sources and costs and affordability (to users and systems) of water used by such populations for their residential water needs; and

"(C) review State and water system compliance with the exclusion provisions of section 1401(4)(B) of such Act.

The Comptroller General shall submit a report to the Congress within 3 years after the date of enactment of this Act [Aug. 6, 1996] containing the results of such study."

SAFE DRINKING WATER AMENDMENTS OF 1977 RESTRICTIONS ON APPROPRIATIONS FOR RESEARCH

Pub. L. 95–190, § 2(e), Nov. 16, 1977, 91 Stat. 1393, provided that: "Nothing in this Act [see Short Title of 1977 Amendment note set out under section 201 of this title] shall be construed to authorize the appropriation of any amount for research under title XIV of the Public Health Service Act [this subchapter] (relating to safe drinking water)."

SAFE DRINKING WATER AMENDMENTS OF 1977 AS NOT AFFECTING AUTHORITY OF ADMINISTRATOR WITH RESPECT TO CONTAMINANTS

Pub. L. 95–190, § 3(e)(2), Nov. 16, 1977, 91 Stat. 1394, provided that: "Nothing in this Act [see Short Title of 1977 Amendment note set out under section 201 of this title] shall be construed to alter or affect the Administrator's authority or duty under title 14 of the Public Health Service Act [this subchapter] to promulgate regulations or take other action with respect to any contaminant."

RURAL WATER SURVEY; REPORT TO PRESIDENT AND CONGRESS; AUTHORIZATION OF APPROPRIATIONS

Section 3 of Pub. L. 93–523, as amended by Pub. L. 95–190, §§ 2(d), 3(d), Nov. 16, 1977, 91 Stat. 1393, 1394, directed Administrator of Environmental Protection Agency, after consultation with Secretary of Agriculture and the several States, to enter into arrangements with public or private entities to conduct a survey of quantity, quality, and availability of rural drinking water supplies, which survey was to include, but not be limited to, consideration of number of residents in each rural area who presently are being inadequately served by a public or private drinking water supply system, or by an individual home drinking water supply system, or who presently have limited or otherwise inadequate access to drinking water, or who, due to absence or inadequacy of a drinking water supply system, are exposed to an increased health hazard, and who have experienced incidents of chronic or acute illness, which may be attributed to inadequacy of a drinking water supply system. Survey to be completed within eighteen months of Dec. 16, 1974, and a final report thereon submitted, not later than six months after completion of survey, to President and to Congress.

FEDERAL COMPLIANCE WITH POLLUTION CONTROL STANDARDS

For provisions relating to the responsibility of the head of each Executive agency for compliance with applicable pollution control standards, see Ex. Ord. No. 12088, Oct. 13, 1978, 43 F.R. 47707, set out as a note under section 4321 of this title.

TERMINATION OF ADVISORY COMMITTEES

Pub. L. 93–641, § 6, Jan. 4, 1975, 88 Stat. 2275, set out as a note under section 217a of this title, provided that an advisory committee established pursuant to the Public Health Service Act shall terminate at such time as may be specifically prescribed by an Act of Congress enacted after Jan. 4, 1975.

PART B—PUBLIC WATER SYSTEMS

§ 300g. Coverage

Subject to sections 300g–4 and 300g–5 of this title, national primary drinking water regulations under this part shall apply to each public water system in each State; except that such regulations shall not apply to a public water system—

(1) which consists only of distribution and storage facilities (and does not have any collection and treatment facilities);

(2) which obtains all of its water from, but is not owned or operated by, a public water system to which such regulations apply;

(3) which does not sell water to any person; and

(4) which is not a carrier which conveys passengers in interstate commerce.

(July 1, 1944, ch. 373, title XIV, § 1411, as added Pub. L. 93–523, § 2(a), Dec. 16, 1974, 88 Stat. 1662.)

§ 300g–1. National drinking water regulations

(a) National primary drinking water regulations; maximum contaminant level goals; simultaneous publication of regulations and goals

(1) Effective on June 19, 1986, each national interim or revised primary drinking water regulation promulgated under this section before June 19, 1986, shall be deemed to be a national primary drinking water regulation under subsection (b) of this section. No such regulation shall be required to comply with the standards set forth in subsection (b)(4) of this section unless such regulation is amended to establish a different maximum contaminant level after June 19, 1986.

(2) After June 19, 1986, each recommended maximum contaminant level published before June 19, 1986, shall be treated as a maximum contaminant level goal.

(3) Whenever a national primary drinking water regulation is proposed under subsection (b) of this section for any contaminant, the maximum contaminant level goal for such contaminant shall be proposed simultaneously. Whenever a national primary drinking water regulation is promulgated under subsection (b) of this section for any contaminant, the maximum contaminant level goal for such contaminant shall be published simultaneously.

(4) Paragraph (3) shall not apply to any recommended maximum contaminant level published before June 19, 1986.

(b) Standards

(1) IDENTIFICATION OF CONTAMINANTS FOR LISTING.—

(A) GENERAL AUTHORITY.—The Administrator shall, in accordance with the procedures established by this subsection, publish a maximum contaminant level goal and promulgate a national primary drinking water regulation for a contaminant (other than a contaminant referred to in paragraph (2) for which a national primary drinking water regulation has been

promulgated as of August 6, 1996) if the Administrator determines that—

(i) the contaminant may have an adverse effect on the health of persons;

(ii) the contaminant is known to occur or there is a substantial likelihood that the contaminant will occur in public water systems with a frequency and at levels of public health concern; and

(iii) in the sole judgment of the Administrator, regulation of such contaminant presents a meaningful opportunity for health risk reduction for persons served by public water systems.

(B) REGULATION OF UNREGULATED CONTAMINANTS.—

(i) LISTING OF CONTAMINANTS FOR CONSIDERATION.—(I) Not later than 18 months after August 6, 1996, and every 5 years thereafter, the Administrator, after consultation with the scientific community, including the Science Advisory Board, after notice and opportunity for public comment, and after considering the occurrence data base established under section 300j–4(g) of this title, shall publish a list of contaminants which, at the time of publication, are not subject to any proposed or promulgated national primary drinking water regulation, which are known or anticipated to occur in public water systems, and which may require regulation under this subchapter.

(II) The unregulated contaminants considered under subclause (I) shall include, but not be limited to, substances referred to in section 9601(14) of this title, and substances registered as pesticides under the Federal Insecticide, Fungicide, and Rodenticide Act [7 U.S.C. 136 et seq.].

(III) The Administrator's decision whether or not to select an unregulated contaminant for a list under this clause shall not be subject to judicial review.

(ii) DETERMINATION TO REGULATE.—(I) Not later than 5 years after August 6, 1996, and every 5 years thereafter, the Administrator shall, after notice of the preliminary determination and opportunity for public comment, for not fewer than 5 contaminants included on the list published under clause (i), make determinations of whether or not to regulate such contaminants.

(II) A determination to regulate a contaminant shall be based on findings that the criteria of clauses (i), (ii), and (iii) of subparagraph (A) are satisfied. Such findings shall be based on the best available public health information, including the occurrence data base established under section 300j–4(g) of this title.

(III) The Administrator may make a determination to regulate a contaminant that does not appear on a list under clause (i) if the determination to regulate is made pursuant to subclause (II).

(IV) A determination under this clause not to regulate a contaminant shall be considered final agency action and subject to judicial review.

(iii) REVIEW.—Each document setting forth the determination for a contaminant under clause (ii) shall be available for public comment at such time as the determination is published.

(C) PRIORITIES.—In selecting unregulated contaminants for consideration under subparagraph (B), the Administrator shall select contaminants that present the greatest public health concern. The Administrator, in making such selection, shall take into consideration, among other factors of public health concern, the effect of such contaminants upon subgroups that comprise a meaningful portion of the general population (such as infants, children, pregnant women, the elderly, individuals with a history of serious illness, or other subpopulations) that are identifiable as being at greater risk of adverse health effects due to exposure to contaminants in drinking water than the general population.

(D) URGENT THREATS TO PUBLIC HEALTH.—The Administrator may promulgate an interim national primary drinking water regulation for a contaminant without making a determination for the contaminant under paragraph (4)(C), or completing the analysis under paragraph (3)(C), to address an urgent threat to public health as determined by the Administrator after consultation with and written response to any comments provided by the Secretary of Health and Human Services, acting through the director of the Centers for Disease Control and Prevention or the director of the National Institutes of Health. A determination for any contaminant in accordance with paragraph (4)(C) subject to an interim regulation under this subparagraph shall be issued, and a completed analysis meeting the requirements of paragraph (3)(C) shall be published, not later than 3 years after the date on which the regulation is promulgated and the regulation shall be repromulgated, or revised if appropriate, not later than 5 years after that date.

(E) REGULATION.—For each contaminant that the Administrator determines to regulate under subparagraph (B), the Administrator shall publish maximum contaminant level goals and promulgate, by rule, national primary drinking water regulations under this subsection. The Administrator shall propose the maximum contaminant level goal and national primary drinking water regulation for a contaminant not later than 24 months after the determination to regulate under subparagraph (B), and may publish such proposed regulation concurrent with the determination to regulate. The Administrator shall publish a maximum contaminant level goal and promulgate a national primary drinking water regulation within 18 months after the proposal thereof. The Administrator, by notice in the Federal Register, may extend the deadline for such promulgation for up to 9 months.

(F) HEALTH ADVISORIES AND OTHER ACTIONS.—The Administrator may publish health advisories (which are not regulations) or take other appropriate actions for contaminants not subject to any national primary drinking water regulation.

(2) SCHEDULES AND DEADLINES.—

(A) IN GENERAL.—In the case of the contaminants listed in the Advance Notice of Proposed

Rulemaking published in volume 47, Federal Register, page 9352, and in volume 48, Federal Register, page 45502, the Administrator shall publish maximum contaminant level goals and promulgate national primary drinking water regulations—

(i) not later than 1 year after June 19, 1986, for not fewer than 9 of the listed contaminants;

(ii) not later than 2 years after June 19, 1986, for not fewer than 40 of the listed contaminants; and

(iii) not later than 3 years after June 19, 1986, for the remainder of the listed contaminants.

(B) SUBSTITUTION OF CONTAMINANTS.—If the Administrator identifies a drinking water contaminant the regulation of which, in the judgment of the Administrator, is more likely to be protective of public health (taking into account the schedule for regulation under subparagraph (A)) than a contaminant referred to in subparagraph (A), the Administrator may publish a maximum contaminant level goal and promulgate a national primary drinking water regulation for the identified contaminant in lieu of regulating the contaminant referred to in subparagraph (A). Substitutions may be made for not more than 7 contaminants referred to in subparagraph (A). Regulation of a contaminant identified under this subparagraph shall be in accordance with the schedule applicable to the contaminant for which the substitution is made.

(C) DISINFECTANTS AND DISINFECTION BYPRODUCTS.—The Administrator shall promulgate an Interim Enhanced Surface Water Treatment Rule, a Final Enhanced Surface Water Treatment Rule, a Stage I Disinfectants and Disinfection Byproducts Rule, and a Stage II Disinfectants and Disinfection Byproducts Rule in accordance with the schedule published in volume 59, Federal Register, page 6361 (February 10, 1994), in table III.13 of the proposed Information Collection Rule. If a delay occurs with respect to the promulgation of any rule in the schedule referred to in this subparagraph, all subsequent rules shall be completed as expeditiously as practicable but no later than a revised date that reflects the interval or intervals for the rules in the schedule.

(3) RISK ASSESSMENT, MANAGEMENT, AND COMMUNICATION.—

(A) USE OF SCIENCE IN DECISIONMAKING.—In carrying out this section, and, to the degree that an Agency action is based on science, the Administrator shall use—

(i) the best available, peer-reviewed science and supporting studies conducted in accordance with sound and objective scientific practices; and

(ii) data collected by accepted methods or best available methods (if the reliability of the method and the nature of the decision justifies use of the data).

(B) PUBLIC INFORMATION.—In carrying out this section, the Administrator shall ensure that the presentation of information on public health effects is comprehensive, informative, and understandable. The Administrator shall, in a document made available to the public in support of a regulation promulgated under this section, specify, to the extent practicable—

(i) each population addressed by any estimate of public health effects;

(ii) the expected risk or central estimate of risk for the specific populations;

(iii) each appropriate upper-bound or lower-bound estimate of risk;

(iv) each significant uncertainty identified in the process of the assessment of public health effects and studies that would assist in resolving the uncertainty; and

(v) peer-reviewed studies known to the Administrator that support, are directly relevant to, or fail to support any estimate of public health effects and the methodology used to reconcile inconsistencies in the scientific data.

(C) HEALTH RISK REDUCTION AND COST ANALYSIS.—

(i) MAXIMUM CONTAMINANT LEVELS.—When proposing any national primary drinking water regulation that includes a maximum contaminant level, the Administrator shall, with respect to a maximum contaminant level that is being considered in accordance with paragraph (4) and each alternative maximum contaminant level that is being considered pursuant to paragraph (5) or (6)(A), publish, seek public comment on, and use for the purposes of paragraphs (4), (5), and (6) an analysis of each of the following:

(I) Quantifiable and nonquantifiable health risk reduction benefits for which there is a factual basis in the rulemaking record to conclude that such benefits are likely to occur as the result of treatment to comply with each level.

(II) Quantifiable and nonquantifiable health risk reduction benefits for which there is a factual basis in the rulemaking record to conclude that such benefits are likely to occur from reductions in co-occurring contaminants that may be attributed solely to compliance with the maximum contaminant level, excluding benefits resulting from compliance with other proposed or promulgated regulations.

(III) Quantifiable and nonquantifiable costs for which there is a factual basis in the rulemaking record to conclude that such costs are likely to occur solely as a result of compliance with the maximum contaminant level, including monitoring, treatment, and other costs and excluding costs resulting from compliance with other proposed or promulgated regulations.

(IV) The incremental costs and benefits associated with each alternative maximum contaminant level considered.

(V) The effects of the contaminant on the general population and on groups within the general population such as infants, children, pregnant women, the elderly, individuals with a history of serious illness, or other subpopulations that are identified as likely to be at greater risk of adverse health effects due to exposure to contami-

nants in drinking water than the general population.

(VI) Any increased health risk that may occur as the result of compliance, including risks associated with co-occurring contaminants.

(VII) Other relevant factors, including the quality and extent of the information, the uncertainties in the analysis supporting subclauses (I) through (VI), and factors with respect to the degree and nature of the risk.

(ii) TREATMENT TECHNIQUES.—When proposing a national primary drinking water regulation that includes a treatment technique in accordance with paragraph (7)(A), the Administrator shall publish and seek public comment on an analysis of the health risk reduction benefits and costs likely to be experienced as the result of compliance with the treatment technique and alternative treatment techniques that are being considered, taking into account, as appropriate, the factors described in clause (i).

(iii) APPROACHES TO MEASURE AND VALUE BENEFITS.—The Administrator may identify valid approaches for the measurement and valuation of benefits under this subparagraph, including approaches to identify consumer willingness to pay for reductions in health risks from drinking water contaminants.

(iv) AUTHORIZATION.—There are authorized to be appropriated to the Administrator, acting through the Office of Ground Water and Drinking Water, to conduct studies, assessments, and analyses in support of regulations or the development of methods, $35,000,000 for each of fiscal years 1996 through 2003.

(4) GOALS AND STANDARDS.—

(A) MAXIMUM CONTAMINANT LEVEL GOALS.—Each maximum contaminant level goal established under this subsection shall be set at the level at which no known or anticipated adverse effects on the health of persons occur and which allows an adequate margin of safety.

(B) MAXIMUM CONTAMINANT LEVELS.—Except as provided in paragraphs (5) and (6), each national primary drinking water regulation for a contaminant for which a maximum contaminant level goal is established under this subsection shall specify a maximum contaminant level for such contaminant which is as close to the maximum contaminant level goal as is feasible.

(C) DETERMINATION.—At the time the Administrator proposes a national primary drinking water regulation under this paragraph, the Administrator shall publish a determination as to whether the benefits of the maximum contaminant level justify, or do not justify, the costs based on the analysis conducted under paragraph (3)(C).

(D) DEFINITION OF FEASIBLE.—For the purposes of this subsection, the term ''feasible'' means feasible with the use of the best technology, treatment techniques and other means which the Administrator finds, after examination for efficacy under field conditions and not solely under laboratory conditions, are available (taking cost into consideration). For the purpose of this paragraph, granular activated carbon is feasible for the control of synthetic organic chemicals, and any technology, treatment technique, or other means found to be the best available for the control of synthetic organic chemicals must be at least as effective in controlling synthetic organic chemicals as granular activated carbon.

(E) FEASIBLE TECHNOLOGIES.—

(i) IN GENERAL.—Each national primary drinking water regulation which establishes a maximum contaminant level shall list the technology, treatment techniques, and other means which the Administrator finds to be feasible for purposes of meeting such maximum contaminant level, but a regulation under this subsection shall not require that any specified technology, treatment technique, or other means be used for purposes of meeting such maximum contaminant level.

(ii) LIST OF TECHNOLOGIES FOR SMALL SYSTEMS.—The Administrator shall include in the list any technology, treatment technique, or other means that is affordable, as determined by the Administrator in consultation with the States, for small public water systems serving—

(I) a population of 10,000 or fewer but more than 3,300;

(II) a population of 3,300 or fewer but more than 500; and

(III) a population of 500 or fewer but more than 25;

and that achieves compliance with the maximum contaminant level or treatment technique, including packaged or modular systems and point-of-entry or point-of-use treatment units. Point-of-entry and point-of-use treatment units shall be owned, controlled and maintained by the public water system or by a person under contract with the public water system to ensure proper operation and maintenance and compliance with the maximum contaminant level or treatment technique and equipped with mechanical warnings to ensure that customers are automatically notified of operational problems. The Administrator shall not include in the list any point-of-use treatment technology, treatment technique, or other means to achieve compliance with a maximum contaminant level or treatment technique requirement for a microbial contaminant (or an indicator of a microbial contaminant). If the American National Standards Institute has issued product standards applicable to a specific type of point-of-entry or point-of-use treatment unit, individual units of that type shall not be accepted for compliance with a maximum contaminant level or treatment technique requirement unless they are independently certified in accordance with such standards. In listing any technology, treatment technique, or other means pursuant to this clause, the Administrator shall consider the quality of the source water to be treated.

(iii) LIST OF TECHNOLOGIES THAT ACHIEVE COMPLIANCE.—Except as provided in clause

(v), not later than 2 years after August 6, 1996, and after consultation with the States, the Administrator shall issue a list of technologies that achieve compliance with the maximum contaminant level or treatment technique for each category of public water systems described in subclauses (I), (II), and (III) of clause (ii) for each national primary drinking water regulation promulgated prior to June 19, 1986.

(iv) ADDITIONAL TECHNOLOGIES.—The Administrator may, at any time after a national primary drinking water regulation has been promulgated, supplement the list of technologies describing additional or new or innovative treatment technologies that meet the requirements of this paragraph for categories of small public water systems described in subclauses (I), (II), and (III) of clause (ii) that are subject to the regulation.

(v) TECHNOLOGIES THAT MEET SURFACE WATER TREATMENT RULE.—Within one year after August 6, 1996, the Administrator shall list technologies that meet the Surface Water Treatment Rule for each category of public water systems described in subclauses (I), (II), and (III) of clause (ii).

(5) ADDITIONAL HEALTH RISK CONSIDERATIONS.—

(A) IN GENERAL.—Notwithstanding paragraph (4), the Administrator may establish a maximum contaminant level for a contaminant at a level other than the feasible level, if the technology, treatment techniques, and other means used to determine the feasible level would result in an increase in the health risk from drinking water by—

(i) increasing the concentration of other contaminants in drinking water; or

(ii) interfering with the efficacy of drinking water treatment techniques or processes that are used to comply with other national primary drinking water regulations.

(B) ESTABLISHMENT OF LEVEL.—If the Administrator establishes a maximum contaminant level or levels or requires the use of treatment techniques for any contaminant or contaminants pursuant to the authority of this paragraph—

(i) the level or levels or treatment techniques shall minimize the overall risk of adverse health effects by balancing the risk from the contaminant and the risk from other contaminants the concentrations of which may be affected by the use of a treatment technique or process that would be employed to attain the maximum contaminant level or levels; and

(ii) the combination of technology, treatment techniques, or other means required to meet the level or levels shall not be more stringent than is feasible (as defined in paragraph (4)(D)).

(6) ADDITIONAL HEALTH RISK REDUCTION AND COST CONSIDERATIONS.—

(A) IN GENERAL.—Notwithstanding paragraph (4), if the Administrator determines based on an analysis conducted under paragraph (3)(C) that the benefits of a maximum contaminant level promulgated in accordance with paragraph (4) would not justify the costs of complying with the level, the Administrator may, after notice and opportunity for public comment, promulgate a maximum contaminant level for the contaminant that maximizes health risk reduction benefits at a cost that is justified by the benefits.

(B) EXCEPTION.—The Administrator shall not use the authority of this paragraph to promulgate a maximum contaminant level for a contaminant, if the benefits of compliance with a national primary drinking water regulation for the contaminant that would be promulgated in accordance with paragraph (4) experienced by—

(i) persons served by large public water systems; and

(ii) persons served by such other systems as are unlikely, based on information provided by the States, to receive a variance under section 300g–4(e) of this title (relating to small system variances);

would justify the costs to the systems of complying with the regulation. This subparagraph shall not apply if the contaminant is found almost exclusively in small systems eligible under section 300g–4(e) of this title for a small system variance.

(C) DISINFECTANTS AND DISINFECTION BYPRODUCTS.—The Administrator may not use the authority of this paragraph to establish a maximum contaminant level in a Stage I or Stage II national primary drinking water regulation (as described in paragraph (2)(C)) for contaminants that are disinfectants or disinfection byproducts, or to establish a maximum contaminant level or treatment technique requirement for the control of cryptosporidium. The authority of this paragraph may be used to establish regulations for the use of disinfection by systems relying on ground water sources as required by paragraph (8).

(D) JUDICIAL REVIEW.—A determination by the Administrator that the benefits of a maximum contaminant level or treatment requirement justify or do not justify the costs of complying with the level shall be reviewed by the court pursuant to section 300j–7 of this title only as part of a review of a final national primary drinking water regulation that has been promulgated based on the determination and shall not be set aside by the court under that section unless the court finds that the determination is arbitrary and capricious.

(7)(A) The Administrator is authorized to promulgate a national primary drinking water regulation that requires the use of a treatment technique in lieu of establishing a maximum contaminant level, if the Administrator makes a finding that it is not economically or technologically feasible to ascertain the level of the contaminant. In such case, the Administrator shall identify those treatment techniques which, in the Administrator's judgment, would prevent known or anticipated adverse effects on the health of persons to the extent feasible. Such regulations shall specify each treatment technique known to the Administrator which meets the requirements of this paragraph, but the Administrator may grant a variance from any specified treatment technique in accordance with section 300g–4(a)(3) of this title.

(B) Any schedule referred to in this subsection for the promulgation of a national primary drinking water regulation for any contaminant shall apply in the same manner if the regulation requires a treatment technique in lieu of establishing a maximum contaminant level.

(C)(i) Not later than 18 months after June 19, 1986, the Administrator shall propose and promulgate national primary drinking water regulations specifying criteria under which filtration (including coagulation and sedimentation, as appropriate) is required as a treatment technique for public water systems supplied by surface water sources. In promulgating such rules, the Administrator shall consider the quality of source waters, protection afforded by watershed management, treatment practices (such as disinfection and length of water storage) and other factors relevant to protection of health.

(ii) In lieu of the provisions of section 300g–4 of this title the Administrator shall specify procedures by which the State determines which public water systems within its jurisdiction shall adopt filtration under the criteria of clause (i). The State may require the public water system to provide studies or other information to assist in this determination. The procedures shall provide notice and opportunity for public hearing on this determination. If the State determines that filtration is required, the State shall prescribe a schedule for compliance by the public water system with the filtration requirement. A schedule shall require compliance within 18 months of a determination made under clause (iii).

(iii) Within 18 months from the time that the Administrator establishes the criteria and procedures under this subparagraph, a State with primary enforcement responsibility shall adopt any necessary regulations to implement this subparagraph. Within 12 months of adoption of such regulations the State shall make determinations regarding filtration for all the public water systems within its jurisdiction supplied by surface waters.

(iv) If a State does not have primary enforcement responsibility for public water systems, the Administrator shall have the same authority to make the determination in clause (ii) in such State as the State would have under that clause. Any filtration requirement or schedule under this subparagraph shall be treated as if it were a requirement of a national primary drinking water regulation.

(v) As an additional alternative to the regulations promulgated pursuant to clauses (i) and (iii), including the criteria for avoiding filtration contained in 40 CFR 141.71, a State exercising primary enforcement responsibility for public water systems may, on a case-by-case basis, and after notice and opportunity for public comment, establish treatment requirements as an alternative to filtration in the case of systems having uninhabited, undeveloped watersheds in consolidated ownership, and having control over access to, and activities in, those watersheds, if the State determines (and the Administrator concurs) that the quality of the source water and the alternative treatment requirements established by the State ensure greater removal or inactivation efficiencies of pathogenic organisms for which national primary drinking water regulations have been promulgated or that are of public health concern than would be achieved by the combination of filtration and chlorine disinfection (in compliance with this section).

(8) DISINFECTION.—At any time after the end of the 3-year period that begins on August 6, 1996, but not later than the date on which the Administrator promulgates a Stage II rulemaking for disinfectants and disinfection byproducts (as described in paragraph (2)(C)), the Administrator shall also promulgate national primary drinking water regulations requiring disinfection as a treatment technique for all public water systems, including surface water systems and, as necessary, ground water systems. After consultation with the States, the Administrator shall (as part of the regulations) promulgate criteria that the Administrator, or a State that has primary enforcement responsibility under section 300g–2 of this title, shall apply to determine whether disinfection shall be required as a treatment technique for any public water system served by ground water. The Administrator shall simultaneously promulgate a rule specifying criteria that will be used by the Administrator (or delegated State authorities) to grant variances from this requirement according to the provisions of sections 300g–4(a)(1)(B) and 300g–4(a)(3) of this title. In implementing section 300j–1(e) of this title the Administrator or the delegated State authority shall, where appropriate, give special consideration to providing technical assistance to small public water systems in complying with the regulations promulgated under this paragraph.

(9) REVIEW AND REVISION.—The Administrator shall, not less often than every 6 years, review and revise, as appropriate, each national primary drinking water regulation promulgated under this subchapter. Any revision of a national primary drinking water regulation shall be promulgated in accordance with this section, except that each revision shall maintain, or provide for greater, protection of the health of persons.

(10) EFFECTIVE DATE.—A national primary drinking water regulation promulgated under this section (and any amendment thereto) shall take effect on the date that is 3 years after the date on which the regulation is promulgated unless the Administrator determines that an earlier date is practicable, except that the Administrator, or a State (in the case of an individual system), may allow up to 2 additional years to comply with a maximum contaminant level or treatment technique if the Administrator or State (in the case of an individual system) determines that additional time is necessary for capital improvements.

(11) No national primary drinking water regulation may require the addition of any substance for preventive health care purposes unrelated to contamination of drinking water.

(12) CERTAIN CONTAMINANTS.—

(A) ARSENIC.—

(i) SCHEDULE AND STANDARD.—Notwithstanding the deadlines set forth in paragraph (1), the Administrator shall promulgate a national primary drinking water regulation

for arsenic pursuant to this subsection, in accordance with the schedule established by this paragraph.

(ii) STUDY PLAN.—Not later than 180 days after August 6, 1996, the Administrator shall develop a comprehensive plan for study in support of drinking water rulemaking to reduce the uncertainty in assessing health risks associated with exposure to low levels of arsenic. In conducting such study, the Administrator shall consult with the National Academy of Sciences, other Federal agencies, and interested public and private entities.

(iii) COOPERATIVE AGREEMENTS.—In carrying out the study plan, the Administrator may enter into cooperative agreements with other Federal agencies, State and local governments, and other interested public and private entities.

(iv) PROPOSED REGULATIONS.—The Administrator shall propose a national primary drinking water regulation for arsenic not later than January 1, 2000.

(v) FINAL REGULATIONS.—Not later than January 1, 2001, after notice and opportunity for public comment, the Administrator shall promulgate a national primary drinking water regulation for arsenic.

(vi) AUTHORIZATION.—There are authorized to be appropriated $2,500,000 for each of fiscal years 1997 through 2000 for the studies required by this paragraph.

(B) SULFATE.—

(i) ADDITIONAL STUDY.—Prior to promulgating a national primary drinking water regulation for sulfate, the Administrator and the Director of the Centers for Disease Control and Prevention shall jointly conduct an additional study to establish a reliable dose-response relationship for the adverse human health effects that may result from exposure to sulfate in drinking water, including the health effects that may be experienced by groups within the general population (including infants and travelers) that are potentially at greater risk of adverse health effects as the result of such exposure. The study shall be conducted in consultation with interested States, shall be based on the best available, peer-reviewed science and supporting studies conducted in accordance with sound and objective scientific practices, and shall be completed not later than 30 months after August 6, 1996.

(ii) DETERMINATION.—The Administrator shall include sulfate among the 5 or more contaminants for which a determination is made pursuant to paragraph (3)(B) not later than 5 years after August 6, 1996.

(iii) PROPOSED AND FINAL RULE.—Notwithstanding the deadlines set forth in paragraph (2), the Administrator may, pursuant to the authorities of this subsection and after notice and opportunity for public comment, promulgate a final national primary drinking water regulation for sulfate. Any such regulation shall include requirements for public notification and options for the provision of alternative water supplies to populations at risk as a means of complying with the regulation in lieu of a best available treatment technology or other means.

(13) RADON IN DRINKING WATER.—

(A) NATIONAL PRIMARY DRINKING WATER REGULATION.—Notwithstanding paragraph (2), the Administrator shall withdraw any national primary drinking water regulation for radon proposed prior to August 6, 1996, and shall propose and promulgate a regulation for radon under this section, as amended by the Safe Drinking Water Act Amendments of 1996.

(B) RISK ASSESSMENT AND STUDIES.—

(i) ASSESSMENT BY NAS.—Prior to proposing a national primary drinking water regulation for radon, the Administrator shall arrange for the National Academy of Sciences to prepare a risk assessment for radon in drinking water using the best available science in accordance with the requirements of paragraph (3). The risk assessment shall consider each of the risks associated with exposure to radon from drinking water and consider studies on the health effects of radon at levels and under conditions likely to be experienced through residential exposure. The risk assessment shall be peer-reviewed.

(ii) STUDY OF OTHER MEASURES.—The Administrator shall arrange for the National Academy of Sciences to prepare an assessment of the health risk reduction benefits associated with various mitigation measures to reduce radon levels in indoor air. The assessment may be conducted as part of the risk assessment authorized by clause (i) and shall be used by the Administrator to prepare the guidance and approve State programs under subparagraph (G).

(iii) OTHER ORGANIZATION.—If the National Academy of Sciences declines to prepare the risk assessment or studies required by this subparagraph, the Administrator shall enter into a contract or cooperative agreement with another independent, scientific organization to prepare such assessments or studies.

(C) HEALTH RISK REDUCTION AND COST ANALYSIS.—Not later than 30 months after August 6, 1996, the Administrator shall publish, and seek public comment on, a health risk reduction and cost analysis meeting the requirements of paragraph (3)(C) for potential maximum contaminant levels that are being considered for radon in drinking water. The Administrator shall include a response to all significant public comments received on the analysis with the preamble for the proposed rule published under subparagraph (D).

(D) PROPOSED REGULATION.—Not later than 36 months after August 6, 1996, the Administrator shall propose a maximum contaminant level goal and a national primary drinking water regulation for radon pursuant to this section.

(E) FINAL REGULATION.—Not later than 12 months after the date of the proposal under subparagraph (D), the Administrator shall publish a maximum contaminant level goal and promulgate a national primary drinking water regulation for radon pursuant to this

section based on the risk assessment prepared pursuant to subparagraph (B) and the health risk reduction and cost analysis published pursuant to subparagraph (C). In considering the risk assessment and the health risk reduction and cost analysis in connection with the promulgation of such a standard, the Administrator shall take into account the costs and benefits of control programs for radon from other sources.

(F) ALTERNATIVE MAXIMUM CONTAMINANT LEVEL.—If the maximum contaminant level for radon in drinking water promulgated pursuant to subparagraph (E) is more stringent than necessary to reduce the contribution to radon in indoor air from drinking water to a concentration that is equivalent to the national average concentration of radon in outdoor air, the Administrator shall, simultaneously with the promulgation of such level, promulgate an alternative maximum contaminant level for radon that would result in a contribution of radon from drinking water to radon levels in indoor air equivalent to the national average concentration of radon in outdoor air. If the Administrator promulgates an alternative maximum contaminant level under this subparagraph, the Administrator shall, after notice and opportunity for public comment and in consultation with the States, publish guidelines for State programs, including criteria for multimedia measures to mitigate radon levels in indoor air, to be used by the States in preparing programs under subparagraph (G). The guidelines shall take into account data from existing radon mitigation programs and the assessment of mitigation measures prepared under subparagraph (B).

(G) MULTIMEDIA RADON MITIGATION PROGRAMS.—

(i) IN GENERAL.—A State may develop and submit a multimedia program to mitigate radon levels in indoor air for approval by the Administrator under this subparagraph. If, after notice and the opportunity for public comment, such program is approved by the Administrator, public water systems in the State may comply with the alternative maximum contaminant level promulgated under subparagraph (F) in lieu of the maximum contaminant level in the national primary drinking water regulation promulgated under subparagraph (E).

(ii) ELEMENTS OF PROGRAMS.—State programs may rely on a variety of mitigation measures including public education, testing, training, technical assistance, remediation grant and loan or incentive programs, or other regulatory or nonregulatory measures. The effectiveness of elements in State programs shall be evaluated by the Administrator based on the assessment prepared by the National Academy of Sciences under subparagraph (B) and the guidelines published by the Administrator under subparagraph (F).

(iii) APPROVAL.—The Administrator shall approve a State program submitted under this paragraph if the health risk reduction benefits expected to be achieved by the program are equal to or greater than the health risk reduction benefits that would be achieved if each public water system in the State complied with the maximum contaminant level promulgated under subparagraph (E). The Administrator shall approve or disapprove a program submitted under this paragraph within 180 days of receipt. A program that is not disapproved during such period shall be deemed approved. A program that is disapproved may be modified to address the objections of the Administrator and be resubmitted for approval.

(iv) REVIEW.—The Administrator shall periodically, but not less often than every 5 years, review each multimedia mitigation program approved under this subparagraph to determine whether it continues to meet the requirements of clause (iii) and shall, after written notice to the State and an opportunity for the State to correct any deficiency in the program, withdraw approval of programs that no longer comply with such requirements.

(v) EXTENSION.—If, within 90 days after the promulgation of an alternative maximum contaminant level under subparagraph (F), the Governor of a State submits a letter to the Administrator committing to develop a multimedia mitigation program under this subparagraph, the effective date of the national primary drinking water regulation for radon in the State that would be applicable under paragraph (10) shall be extended for a period of 18 months.

(vi) LOCAL PROGRAMS.—In the event that a State chooses not to submit a multimedia mitigation program for approval under this subparagraph or has submitted a program that has been disapproved, any public water system in the State may submit a program for approval by the Administrator according to the same criteria, conditions, and approval process that would apply to a State program. The Administrator shall approve a multimedia mitigation program if the health risk reduction benefits expected to be achieved by the program are equal to or greater than the health risk reduction benefits that would result from compliance by the public water system with the maximum contaminant level for radon promulgated under subparagraph (E).

(14) RECYCLING OF FILTER BACKWASH.—The Administrator shall promulgate a regulation to govern the recycling of filter backwash water within the treatment process of a public water system. The Administrator shall promulgate such regulation not later than 4 years after August 6, 1996, unless such recycling has been addressed by the Administrator's Enhanced Surface Water Treatment Rule prior to such date.

(15) VARIANCE TECHNOLOGIES.—

(A) IN GENERAL.—At the same time as the Administrator promulgates a national primary drinking water regulation for a contaminant pursuant to this section, the Administrator shall issue guidance or regulations describing the best treatment technologies, treatment techniques, or other means (referred to in this paragraph as "variance technology") for the contaminant that the Admin-

istrator finds, after examination for efficacy under field conditions and not solely under laboratory conditions, are available and affordable, as determined by the Administrator in consultation with the States, for public water systems of varying size, considering the quality of the source water to be treated. The Administrator shall identify such variance technologies for public water systems serving—

(i) a population of 10,000 or fewer but more than 3,300;

(ii) a population of 3,300 or fewer but more than 500; and

(iii) a population of 500 or fewer but more than 25,

if, considering the quality of the source water to be treated, no treatment technology is listed for public water systems of that size under paragraph (4)(E). Variance technologies identified by the Administrator pursuant to this paragraph may not achieve compliance with the maximum contaminant level or treatment technique requirement of such regulation, but shall achieve the maximum reduction or inactivation efficiency that is affordable considering the size of the system and the quality of the source water. The guidance or regulations shall not require the use of a technology from a specific manufacturer or brand.

(B) LIMITATION.—The Administrator shall not identify any variance technology under this paragraph, unless the Administrator has determined, considering the quality of the source water to be treated and the expected useful life of the technology, that the variance technology is protective of public health.

(C) ADDITIONAL INFORMATION.—The Administrator shall include in the guidance or regulations identifying variance technologies under this paragraph any assumptions supporting the public health determination referred to in subparagraph (B), where such assumptions concern the public water system to which the technology may be applied, or its source waters. The Administrator shall provide any assumptions used in determining affordability, taking into consideration the number of persons served by such systems. The Administrator shall provide as much reliable information as practicable on performance, effectiveness, limitations, costs, and other relevant factors including the applicability of variance technology to waters from surface and underground sources.

(D) REGULATIONS AND GUIDANCE.—Not later than 2 years after August 6, 1996, and after consultation with the States, the Administrator shall issue guidance or regulations under subparagraph (A) for each national primary drinking water regulation promulgated prior to August 6, 1996, for which a variance may be granted under section 300g–4(e) of this title. The Administrator may, at any time after a national primary drinking water regulation has been promulgated, issue guidance or regulations describing additional variance technologies. The Administrator shall, not less often than every 7 years, or upon receipt of a petition supported by substantial information, review variance technologies identified under this paragraph. The Administrator shall issue revised guidance or regulations if new or innovative variance technologies become available that meet the requirements of this paragraph and achieve an equal or greater reduction or inactivation efficiency than the variance technologies previously identified under this subparagraph. No public water system shall be required to replace a variance technology during the useful life of the technology for the sole reason that a more efficient variance technology has been listed under this subparagraph.

(c) Secondary regulations; publication of proposed regulations; promulgation; amendments

The Administrator shall publish proposed national secondary drinking water regulations within 270 days after December 16, 1974. Within 90 days after publication of any such regulation, he shall promulgate such regulation with such modifications as he deems appropriate. Regulations under this subsection may be amended from time to time.

(d) Regulations; public hearings; administrative consultations

Regulations under this section shall be prescribed in accordance with section 553 of title 5 (relating to rulemaking), except that the Administrator shall provide opportunity for public hearing prior to promulgation of such regulations. In proposing and promulgating regulations under this section, the Administrator shall consult with the Secretary and the National Drinking Water Advisory Council.

(e) Science Advisory Board comments

The Administrator shall request comments from the Science Advisory Board (established under the Environmental Research, Development, and Demonstration Act of 1978) prior to proposal of a maximum contaminant level goal and national primary drinking water regulation. The Board shall respond, as it deems appropriate, within the time period applicable for promulgation of the national primary drinking water standard concerned. This subsection shall, under no circumstances, be used to delay final promulgation of any national primary drinking water standard.

(July 1, 1944, ch. 373, title XIV, § 1412, as added Pub. L. 93–523, § 2(a), Dec. 16, 1974, 88 Stat. 1662; amended Pub. L. 95–190, §§ 3(c), 12(a), Nov. 16, 1977, 91 Stat. 1394, 1398; Pub. L. 99–339, title I, § 101(a)–(c)(1), (d), (e), June 19, 1986, 100 Stat. 642–646; Pub. L. 104–182, title I, §§ 102(a), (c)(2), 103, 104(a), (c), 105–111(a), title V, § 501(a)(1), (2), Aug. 6, 1996, 110 Stat. 1617, 1621–1623, 1625–1631, 1691.)

REFERENCES IN TEXT

The Federal Insecticide, Fungicide, and Rodenticide Act, referred to in subsec. (b)(1)(B)(i)(II), is act June 25, 1947, ch. 125, as amended generally by Pub. L. 92–516, Oct. 21, 1972, 86 Stat. 973, which is classified generally to subchapter II (§ 136 et seq.) of chapter 6 of Title 7, Agriculture. For complete classification of this Act to the Code, see Short Title note set out under section 136 of Title 7 and Tables.

The Safe Drinking Water Act Amendments of 1996, referred to in subsec. (b)(13)(A), is Pub. L. 104–182, Aug. 6,

1996, 110 Stat. 1613. For complete classification of this Act to the Code, see Short Title of 1996 Amendment note set out under section 201 of this title and Tables.

The Environmental Research, Development, and Demonstration Act of 1978, referred to in subsec. (e), probably means the Environmental Research, Development, and Demonstration Authorization Act of 1978 which is Pub. L. 95–155, Nov. 8, 1977, 91 Stat. 1257, as amended. Provisions of the Act establishing the Science Advisory Board are classified to section 4365 of this title. For complete classification of this Act to the Code, see Tables.

AMENDMENTS

1996—Subsec. (a)(3). Pub. L. 104–182, §102(c)(2), struck out "paragraph (1), (2), or (3) of" before "subsection (b)" in two places.

Subsec. (b). Pub. L. 104–182, §102(a), inserted heading.

Subsec. (b)(1), (2). Pub. L. 104–182, §102(a), added pars. (1) and (2) and struck out former pars. (1) and (2) which related to publication of maximum contaminant level goals and promulgation of national primary drinking water regulations for certain listed contaminants or substituted contaminants.

Subsec. (b)(3). Pub. L. 104–182, §103, added par. (3).

Pub. L. 104–182, §102(a), struck out par. (3) which related to publication of maximum contaminant level goals and promulgation of national primary drinking water regulations for contaminants, other than those referred to in pars. (1) or (2), which may have an adverse effect on human health and are known to occur in public water systems.

Subsec. (b)(4). Pub. L. 104–182, §104(a)(1), designated first sentence as subpar. (A), inserted par. and subpar. (A) headings, designated second sentence as subpar. (B), inserted subpar. (B) heading, substituted "Except as provided in paragraphs (5) and (6), each national" for "Each national" and "specify a maximum contaminant level" for "specify a maximum level", and added subpar. (C).

Subsec. (b)(4)(D). Pub. L. 104–182, §104(a)(2), (3), redesignated par. (5) as subpar. (D) of par. (4), inserted subpar. heading, and substituted "this paragraph" for "paragraph (4)".

Subsec. (b)(4)(E). Pub. L. 104–182, §§104(a)(4), (5), 105, redesignated par. (6) as subpar. (E)(i) of par. (4), inserted subpar. and cl. headings, substituted "this subsection" for "this paragraph", and added cls. (ii) to (v).

Subsec. (b)(5), (6). Pub. L. 104–182, §104(a)(6), added pars. (5) and (6). Former pars. (5) and (6) redesignated subpars. (D) and (E)(i), respectively, of par. (4).

Subsec. (b)(7)(C)(v). Pub. L. 104–182, §106, added cl. (v).

Subsec. (b)(8). Pub. L. 104–182, §501(a)(2), substituted "section 300j–1(e)" for "section 300j–1(g)".

Pub. L. 104–182, §107, inserted heading, realigned margins, and substituted "At any time after the end of the 3-year period that begins on August 6, 1996, but not later than the date on which the Administrator promulgates a Stage II rulemaking for disinfectants and disinfection byproducts (as described in paragraph (2)(C)), the Administrator shall also promulgate national primary drinking water regulations requiring disinfection as a treatment technique for all public water systems, including surface water systems and, as necessary, ground water systems. After consultation with the States, the Administrator shall (as part of the regulations) promulgate criteria that the Administrator, or a State that has primary enforcement responsibility under section 300g–2 of this title, shall apply to determine whether disinfection shall be required as a treatment technique for any public water system served by ground water." for "Not later than 36 months after June 19, 1986, the Administrator shall propose and promulgate national primary drinking water regulations requiring disinfection as a treatment technique for all public water systems."

Subsec. (b)(9). Pub. L. 104–182, §104(c), amended par. (9) generally. Prior to amendment, par. (9) read as follows: "National primary drinking water regulations shall be amended whenever changes in technology, treatment techniques, and other means permit greater protection of the health of persons, but in any event such regulations shall be reviewed at least once every 3 years. Such review shall include an analysis of innovations or changes in technology, treatment techniques or other activities that have occurred over the previous 3-year period and that may provide for greater protection of the health of persons. The findings of such review shall be published in the Federal Register. If, after opportunity for public comment, the Administrator concludes that the technology, treatment techniques, or other means resulting from such innovations or changes are not feasible within the meaning of paragraph (5), an explanation of such conclusion shall be published in the Federal Register."

Subsec. (b)(10). Pub. L. 104–182, §108, amended par. (10) generally. Prior to amendment, par. (10) read as follows: "National primary drinking water regulations promulgated under this subsection (and amendments thereto) shall take effect eighteen months after the date of their promulgation. Regulations under subsection (a) of this section shall be superseded by regulations under this subsection to the extent provided by the regulations under this subsection."

Subsec. (b)(11). Pub. L. 104–182, §501(a)(1), realigned margins.

Subsec. (b)(12). Pub. L. 104–182, §109(a), added par. (12).

Subsec. (b)(13). Pub. L. 104–182, §109(b), added par. (13).

Subsec. (b)(14). Pub. L. 104–182, §110, added par. (14).

Subsec. (b)(15). Pub. L. 104–182, §111(a), added par. (15).

1986—Subsec. (a). Pub. L. 99–339, §101(a), amended subsec. (a) generally. Prior to amendment, subsec. (a) read as follows:

"(1) The Administrator shall publish proposed national interim primary drinking water regulations within 90 days after December 16, 1974. Within 180 days after December 16, 1974, he shall promulgate such regulations with such modifications as he deems appropriate. Regulations under this paragraph may be amended from time to time.

"(2) National interim primary drinking water regulations promulgated under paragraph (1) shall protect health to the extent feasible, using technology, treatment techniques, and other means, which the Administrator determines are generally available (taking costs into consideration) on December 16, 1974.

"(3) The interim primary regulations first promulgated under paragraph (1) shall take effect eighteen months after the date of their promulgation."

Subsec. (b)(1). Pub. L. 99–339, §101(b), substituted provisions establishing standard setting schedules and deadlines for provisions relating to establishment of maximum contaminant levels and a list of contaminants with adverse effect but of undetermined levels.

Subsec. (b)(2). Pub. L. 99–339, §101(b), substituted provisions authorizing the Administrator to substitute contaminants for those referred to in par. (1) and to supply a list of the contaminants proposed for substitution, with the decision of the Administrator to regulate such contaminant not subject to judicial review, for provisions which authorized the Administrator to publish in the Federal Register proposed revised national interim primary drinking water regulations and 180 days after the date of such proposed regulations to promulgate such revised regulations with modification as deemed appropriate.

Subsec. (b)(3). Pub. L. 99–339, §101(b), substituted provisions directing the Administrator to publish maximum contaminant level goals and promulgate national primary drinking water regulations for contaminants, other than specified in par. (1) or (2), which may have an adverse effect on health and are known or anticipated to occur in public water systems, to establish an advisory working group to aid in establishing a list of such contaminants, and to publish, within a specified time, both proposed and final goals and regulations for provisions which required that revised national primary drinking water regulations specify a maximum contaminant level or require the use of treatment techniques for each contaminant, which level or technique

was to be as close to the recommended level or technique as feasible, and defined the term "feasible".

Subsec. (b)(4) to (11). Pub. L. 99–339, §101(b), (c)(1), (d), added pars. (4) to (8), redesignated former pars. (4) to (6) as pars. (9) to (11), respectively, in par. (9) substituted "National" for "Revised National" and inserted provision that review include analysis, and publication in Federal Register, of innovations in technology, treatment techniques or other activities occurring during previous three years and their feasibility, and in par. (10) substituted "National" for "Revised National".

Subsec. (e). Pub. L. 99–339, §101(e), amended subsec. (e) generally, substituting provisions which relate to the request by the Administrator of comments by the Science Advisory Board prior to proposal of a maximum contaminant level goal and national primary drinking water regulation for provisions which related to study by the National Academy of Sciences to determine the maximum contaminant levels, report to Congress, and funding therefor.

1977—Subsec. (e)(2). Pub. L. 95–190 inserted provisions relating to revisions of the required report and cl. (G).

NATIONAL PRIMARY DRINKING WATER REGULATION FOR ARSENIC

Pub. L. 106–377, §1(a)(1) [title III], Oct. 27, 2000, 114 Stat. 1441, 1441A–41, provided in part: "That notwithstanding section 1412(b)(12)(A)(v) of the Safe Drinking Water Act, as amended [subsec. (b)(12)(A)(v) of this section], the Administrator shall promulgate a national primary drinking water regulation for arsenic not later than June 22, 2001."

APPLICABILITY OF PRIOR REQUIREMENTS

Section 102(b) of Pub. L. 104–182 provided that: "The requirements of subparagraphs (C) and (D) of section 1412(b)(3) of the Safe Drinking Water Act [subsec. (b)(3)(C), (D) of this section] as in effect before the date of enactment of this Act [Aug. 6, 1996], and any obligation to promulgate regulations pursuant to such subparagraphs not promulgated as of the date of enactment of this Act, are superseded by the amendments made by subsection (a) [amending this section]."

DISINFECTANTS AND DISINFECTION BYPRODUCTS

Section 104(b) of Pub. L. 104–182 provided that: "The Administrator of the Environmental Protection Agency may use the authority of section 1412(b)(5) of the Safe Drinking Water Act [subsec. (b)(5) of this section] (as amended by this Act) to promulgate the Stage I and Stage II Disinfectants and Disinfection Byproducts Rules as proposed in volume 59, Federal Register, page 38668 (July 29, 1994). The considerations used in the development of the July 29, 1994, proposed national primary drinking water regulation on disinfectants and disinfection byproducts shall be treated as consistent with such section 1412(b)(5) for purposes of such Stage I and Stage II rules."

§ 300g–2. State primary enforcement responsibility

(a) In general

For purposes of this subchapter, a State has primary enforcement responsibility for public water systems during any period for which the Administrator determines (pursuant to regulations prescribed under subsection (b) of this section) that such State—

(1) has adopted drinking water regulations that are no less stringent than the national primary drinking water regulations promulgated by the Administrator under subsections (a) and (b) of section 300g–1 of this title not later than 2 years after the date on which the regulations are promulgated by the Administrator, except that the Administrator may provide for an extension of not more than 2 years if, after submission and review of appropriate, adequate documentation from the State, the Administrator determines that the extension is necessary and justified;

(2) has adopted and is implementing adequate procedures for the enforcement of such State regulations, including conducting such monitoring and making such inspections as the Administrator may require by regulation;

(3) will keep such records and make such reports with respect to its activities under paragraphs (1) and (2) as the Administrator may require by regulation;

(4) if it permits variances or exemptions, or both, from the requirements of its drinking water regulations which meet the requirements of paragraph (1), permits such variances and exemptions under conditions and in a manner which is not less stringent than the conditions under, and the manner in which variances and exemptions may be granted under sections 300g–4 and 300g–5 of this title;

(5) has adopted and can implement an adequate plan for the provision of safe drinking water under emergency circumstances including earthquakes, floods, hurricanes, and other natural disasters, as appropriate; and

(6) has adopted authority for administrative penalties (unless the constitution of the State prohibits the adoption of the authority) in a maximum amount—

(A) in the case of a system serving a population of more than 10,000, that is not less than $1,000 per day per violation; and

(B) in the case of any other system, that is adequate to ensure compliance (as determined by the State);

except that a State may establish a maximum limitation on the total amount of administrative penalties that may be imposed on a public water system per violation.

(b) Regulations

(1) The Administrator shall, by regulation (proposed within 180 days of December 16, 1974), prescribe the manner in which a State may apply to the Administrator for a determination that the requirements of paragraphs (1), (2), (3), and (4) of subsection (a) of this section are satisfied with respect to the State, the manner in which the determination is made, the period for which the determination will be effective, and the manner in which the Administrator may determine that such requirements are no longer met. Such regulations shall require that before a determination of the Administrator that such requirements are met or are no longer met with respect to a State may become effective, the Administrator shall notify such State of the determination and the reasons therefor and shall provide an opportunity for public hearing on the determination. Such regulations shall be promulgated (with such modifications as the Administrator deems appropriate) within 90 days of the publication of the proposed regulations in the Federal Register. The Administrator shall promptly notify in writing the chief executive officer of each State of the promulgation of regulations under this paragraph. Such notice shall contain a copy of the regulations and shall

specify a State's authority under this subchapter when it is determined to have primary enforcement responsibility for public water systems.

(2) When an application is submitted in accordance with the Administrator's regulations under paragraph (1), the Administrator shall within 90 days of the date on which such application is submitted (A) make the determination applied for, or (B) deny the application and notify the applicant in writing of the reasons for his denial.

(c) Interim primary enforcement authority

A State that has primary enforcement authority under this section with respect to each existing national primary drinking water regulation shall be considered to have primary enforcement authority with respect to each new or revised national primary drinking water regulation during the period beginning on the effective date of a regulation adopted and submitted by the State with respect to the new or revised national primary drinking water regulation in accordance with subsection (b)(1) of this section and ending at such time as the Administrator makes a determination under subsection (b)(2)(B) of this section with respect to the regulation.

(July 1, 1944, ch. 373, title XIV, §1413, as added Pub. L. 93–523, §2(a), Dec. 16, 1974, 88 Stat. 1665; amended Pub. L. 99–339, title I, §101(c)(2), June 19, 1986, 100 Stat. 646; Pub. L. 104–182, title I, §§112, 113(b), Aug. 6, 1996, 110 Stat. 1633, 1635.)

AMENDMENTS

1996—Subsec. (a)(1). Pub. L. 104–182, §112(a)(1), amended par. (1) generally. Prior to amendment, par. (1) read as follows: "has adopted drinking water regulations which are no less stringent than the national primary drinking water regulations in effect under sections 300g–1(a) and 300g–1(b) of this title;".

Subsec. (a)(5). Pub. L. 104–182, §112(b), inserted "including earthquakes, floods, hurricanes, and other natural disasters, as appropriate" after "emergency circumstances".

Subsec. (a)(6). Pub. L. 104–182, §113(b), added par. (6).

Subsec. (c). Pub. L. 104–182, §112(a)(2), added subsec. (c).

1986—Subsec. (a)(1). Pub. L. 99–339 substituted "are no less stringent than the national primary drinking water regulations in effect under sections 300g–1(a) and 300g–1(b) of this title" for subpars. (A) and (B) which related to stringency of State drinking water regulations between period of promulgation and effective date of national interim drinking water regulations and during the period after such effective date.

§ 300g–3. Enforcement of drinking water regulations

(a) Notice to State and public water system; issuance of administrative order; civil action

(1)(A) Whenever the Administrator finds during a period during which a State has primary enforcement responsibility for public water systems (within the meaning of section 300g–2(a) of this title) that any public water system—

(i) for which a variance under section 300g–4 or an exemption under section 300g–5 of this title is not in effect, does not comply with any applicable requirement, or

(ii) for which a variance under section 300g–4 or an exemption under section 300g–5 of this title is in effect, does not comply with any schedule or other requirement imposed pursuant thereto,

he shall so notify the State and such public water system and provide such advice and technical assistance to such State and public water system as may be appropriate to bring the system into compliance with the requirement by the earliest feasible time.

(B) If, beyond the thirtieth day after the Administrator's notification under subparagraph (A), the State has not commenced appropriate enforcement action, the Administrator shall issue an order under subsection (g) of this section requiring the public water system to comply with such applicable requirement or the Administrator shall commence a civil action under subsection (b) of this section.

(2) ENFORCEMENT IN NONPRIMACY STATES.—

(A) IN GENERAL.—If, on the basis of information available to the Administrator, the Administrator finds, with respect to a period in which a State does not have primary enforcement responsibility for public water systems, that a public water system in the State—

(i) for which a variance under section 300g–4 of this title or an exemption under section 300g–5 of this title is not in effect, does not comply with any applicable requirement; or

(ii) for which a variance under section 300g–4 of this title or an exemption under section 300g–5 of this title is in effect, does not comply with any schedule or other requirement imposed pursuant to the variance or exemption;

the Administrator shall issue an order under subsection (g) of this section requiring the public water system to comply with the requirement, or commence a civil action under subsection (b) of this section.

(B) NOTICE.—If the Administrator takes any action pursuant to this paragraph, the Administrator shall notify an appropriate local elected official, if any, with jurisdiction over the public water system of the action prior to the time that the action is taken.

(b) Judicial determinations in appropriate Federal district courts; civil penalties, separate violations

The Administrator may bring a civil action in the appropriate United States district court to require compliance with any applicable requirement, with an order issued under subsection (g) of this section, or with any schedule or other requirement imposed pursuant to a variance or exemption granted under section 300g–4 or 300g–5 of this title if—

(1) authorized under paragraph (1) or (2) of subsection (a) of this section, or

(2) if requested by (A) the chief executive officer of the State in which is located the public water system which is not in compliance with such regulation or requirement, or (B) the agency of such State which has jurisdiction over compliance by public water systems in the State with national primary drinking water regulations or State drinking water regulations.

The court may enter, in an action brought under this subsection, such judgement as protection of

public health may require, taking into consideration the time necessary to comply and the availability of alternative water supplies; and, if the court determines that there has been a violation of the regulation or schedule or other requirement with respect to which the action was brought, the court may, taking into account the seriousness of the violation, the population at risk, and other appropriate factors, impose on the violator a civil penalty of not to exceed $25,000 for each day in which such violation occurs.

(c) Notice to persons served

(1) In general

Each owner or operator of a public water system shall give notice of each of the following to the persons served by the system:

(A) Notice of any failure on the part of the public water system to—

(i) comply with an applicable maximum contaminant level or treatment technique requirement of, or a testing procedure prescribed by, a national primary drinking water regulation; or

(ii) perform monitoring required by section 300j–4(a) of this title.

(B) If the public water system is subject to a variance granted under subsection (a)(1)(A), (a)(2), or (e) of section 300g–4 of this title for an inability to meet a maximum contaminant level requirement or is subject to an exemption granted under section 300g–5 of this title, notice of—

(i) the existence of the variance or exemption; and

(ii) any failure to comply with the requirements of any schedule prescribed pursuant to the variance or exemption.

(C) Notice of the concentration level of any unregulated contaminant for which the Administrator has required public notice pursuant to paragraph (2)(E).

(2) Form, manner, and frequency of notice

(A) In general

The Administrator shall, by regulation, and after consultation with the States, prescribe the manner, frequency, form, and content for giving notice under this subsection. The regulations shall—

(i) provide for different frequencies of notice based on the differences between violations that are intermittent or infrequent and violations that are continuous or frequent; and

(ii) take into account the seriousness of any potential adverse health effects that may be involved.

(B) State requirements

(i) In general

A State may, by rule, establish alternative notification requirements—

(I) with respect to the form and content of notice given under and in a manner in accordance with subparagraph (C); and

(II) with respect to the form and content of notice given under subparagraph (D).

(ii) Contents

The alternative requirements shall provide the same type and amount of information as required pursuant to this subsection and regulations issued under subparagraph (A).

(iii) Relationship to section 300g–2

Nothing in this subparagraph shall be construed or applied to modify the requirements of section 300g–2 of this title.

(C) Violations with potential to have serious adverse effects on human health

Regulations issued under subparagraph (A) shall specify notification procedures for each violation by a public water system that has the potential to have serious adverse effects on human health as a result of short-term exposure. Each notice of violation provided under this subparagraph shall—

(i) be distributed as soon as practicable after the occurrence of the violation, but not later than 24 hours after the occurrence of the violation;

(ii) provide a clear and readily understandable explanation of—

(I) the violation;

(II) the potential adverse effects on human health;

(III) the steps that the public water system is taking to correct the violation; and

(IV) the necessity of seeking alternative water supplies until the violation is corrected;

(iii) be provided to the Administrator or the head of the State agency that has primary enforcement responsibility under section 300g–2 of this title as soon as practicable, but not later than 24 hours after the occurrence of the violation; and

(iv) as required by the State agency in general regulations of the State agency, or on a case-by-case basis after the consultation referred to in clause (iii), considering the health risks involved—

(I) be provided to appropriate broadcast media;

(II) be prominently published in a newspaper of general circulation serving the area not later than 1 day after distribution of a notice pursuant to clause (i) or the date of publication of the next issue of the newspaper; or

(III) be provided by posting or door-to-door notification in lieu of notification by means of broadcast media or newspaper.

(D) Written notice

(i) In general

Regulations issued under subparagraph (A) shall specify notification procedures for violations other than the violations covered by subparagraph (C). The procedures shall specify that a public water system shall provide written notice to each person served by the system by notice (I) in the first bill (if any) prepared after the date of occurrence of the violation, (II) in

an annual report issued not later than 1 year after the date of occurrence of the violation, or (III) by mail or direct delivery as soon as practicable, but not later than 1 year after the date of occurrence of the violation.

(ii) Form and manner of notice

The Administrator shall prescribe the form and manner of the notice to provide a clear and readily understandable explanation of the violation, any potential adverse health effects, and the steps that the system is taking to seek alternative water supplies, if any, until the violation is corrected.

(E) Unregulated contaminants

The Administrator may require the owner or operator of a public water system to give notice to the persons served by the system of the concentration levels of an unregulated contaminant required to be monitored under section 300j–4(a) of this title.

(3) Reports

(A) Annual report by State

(i) In general

Not later than January 1, 1998, and annually thereafter, each State that has primary enforcement responsibility under section 300g–2 of this title shall prepare, make readily available to the public, and submit to the Administrator an annual report on violations of national primary drinking water regulations by public water systems in the State, including violations with respect to (I) maximum contaminant levels, (II) treatment requirements, (III) variances and exemptions, and (IV) monitoring requirements determined to be significant by the Administrator after consultation with the States.

(ii) Distribution

The State shall publish and distribute summaries of the report and indicate where the full report is available for review.

(B) Annual report by Administrator

Not later than July 1, 1998, and annually thereafter, the Administrator shall prepare and make available to the public an annual report summarizing and evaluating reports submitted by States pursuant to subparagraph (A) and notices submitted by public water systems serving Indian Tribes provided to the Administrator pursuant to subparagraph (C) or (D) of paragraph (2) and making recommendations concerning the resources needed to improve compliance with this subchapter. The report shall include information about public water system compliance on Indian reservations and about enforcement activities undertaken and financial assistance provided by the Administrator on Indian reservations, and shall make specific recommendations concerning the resources needed to improve compliance with this subchapter on Indian reservations.

(4) Consumer confidence reports by community water systems

(A) Annual reports to consumers

The Administrator, in consultation with public water systems, environmental groups, public interest groups, risk communication experts, and the States, and other interested parties, shall issue regulations within 24 months after August 6, 1996, to require each community water system to mail to each customer of the system at least once annually a report on the level of contaminants in the drinking water purveyed by that system (referred to in this paragraph as a ''consumer confidence report''). Such regulations shall provide a brief and plainly worded definition of the terms ''maximum contaminant level goal'', ''maximum contaminant level'', ''variances'', and ''exemptions'' and brief statements in plain language regarding the health concerns that resulted in regulation of each regulated contaminant. The regulations shall also include a brief and plainly worded explanation regarding contaminants that may reasonably be expected to be present in drinking water, including bottled water. The regulations shall also provide for an Environmental Protection Agency toll-free hotline that consumers can call for more information and explanation.

(B) Contents of report

The consumer confidence reports under this paragraph shall include, but not be limited to, each of the following:

(i) Information on the source of the water purveyed.

(ii) A brief and plainly worded definition of the terms ''maximum contaminant level goal'', ''maximum contaminant level'', ''variances'', and ''exemptions'' as provided in the regulations of the Administrator.

(iii) If any regulated contaminant is detected in the water purveyed by the public water system, a statement setting forth (I) the maximum contaminant level goal, (II) the maximum contaminant level, (III) the level of such contaminant in such water system, and (IV) for any regulated contaminant for which there has been a violation of the maximum contaminant level during the year concerned, the brief statement in plain language regarding the health concerns that resulted in regulation of such contaminant, as provided by the Administrator in regulations under subparagraph (A).

(iv) Information on compliance with national primary drinking water regulations, as required by the Administrator, and notice if the system is operating under a variance or exemption and the basis on which the variance or exemption was granted.

(v) Information on the levels of unregulated contaminants for which monitoring is required under section 300j–4(a)(2) of this title (including levels of cryptosporidium and radon where States determine they may be found).

(vi) A statement that the presence of contaminants in drinking water does not necessarily indicate that the drinking water poses a health risk and that more information about contaminants and potential health effects can be obtained by calling the Environmental Protection Agency hotline.

A public water system may include such additional information as it deems appropriate for public education. The Administrator may, for not more than 3 regulated contaminants other than those referred to in subclause (IV) of clause (iii), require a consumer confidence report under this paragraph to include the brief statement in plain language regarding the health concerns that resulted in regulation of the contaminant or contaminants concerned, as provided by the Administrator in regulations under subparagraph (A).

(C) Coverage

The Governor of a State may determine not to apply the mailing requirement of subparagraph (A) to a community water system serving fewer than 10,000 persons. Any such system shall—

(i) inform, in the newspaper notice required by clause (iii) or by other means, its customers that the system will not be mailing the report as required by subparagraph (A);

(ii) make the consumer confidence report available upon request to the public; and

(iii) publish the report referred to in subparagraph (A) annually in one or more local newspapers serving the area in which customers of the system are located.

(D) Alternative to publication

For any community water system which, pursuant to subparagraph (C), is not required to meet the mailing requirement of subparagraph (A) and which serves 500 persons or fewer, the community water system may elect not to comply with clause (i) or (iii) of subparagraph (C). If the community water system so elects, the system shall, at a minimum—

(i) prepare an annual consumer confidence report pursuant to subparagraph (B); and

(ii) provide notice at least once per year to each of its customers by mail, by door-to-door delivery, by posting or by other means authorized by the regulations of the Administrator that the consumer confidence report is available upon request.

(E) Alternative form and content

A State exercising primary enforcement responsibility may establish, by rule, after notice and public comment, alternative requirements with respect to the form and content of consumer confidence reports under this paragraph.

(d) Notice of noncompliance with secondary drinking water regulations

Whenever, on the basis of information available to him, the Administrator finds that within a reasonable time after national secondary drinking water regulations have been promulgated, one or more public water systems in a State do not comply with such secondary regulations, and that such noncompliance appears to result from a failure of such State to take reasonable action to assure that public water systems throughout such State meet such secondary regulations, he shall so notify the State.

(e) State authority to adopt or enforce laws or regulations respecting drinking water regulations or public water systems unaffected

Nothing in this subchapter shall diminish any authority of a State or political subdivision to adopt or enforce any law or regulation respecting drinking water regulations or public water systems, but no such law or regulation shall relieve any person of any requirement otherwise applicable under this subchapter.

(f) Notice and public hearing; availability of recommendations transmitted to State and public water system

If the Administrator makes a finding of noncompliance (described in subparagraph (A) or (B) of subsection (a)(1) of this section) with respect to a public water system in a State which has primary enforcement responsibility, the Administrator may, for the purpose of assisting that State in carrying out such responsibility and upon the petition of such State or public water system or persons served by such system, hold, after appropriate notice, public hearings for the purpose of gathering information from technical or other experts, Federal, State, or other public officials, representatives of such public water system, persons served by such system, and other interested persons on—

(1) the ways in which such system can within the earliest feasible time be brought into compliance with the regulation or requirement with respect to which such finding was made, and

(2) the means for the maximum feasible protection of the public health during any period in which such system is not in compliance with a national primary drinking water regulation or requirement applicable to a variance or exemption.

On the basis of such hearings the Administrator shall issue recommendations which shall be sent to such State and public water system and shall be made available to the public and communications media.

(g) Administrative order requiring compliance; notice and hearing; civil penalty; civil actions

(1) In any case in which the Administrator is authorized to bring a civil action under this section or under section 300j–4 of this title with respect to any applicable requirement, the Administrator also may issue an order to require compliance with such applicable requirement.

(2) An order issued under this subsection shall not take effect, in the case of a State having primary enforcement responsibility for public water systems in that State, until after the Administrator has provided the State with an opportunity to confer with the Administrator regarding the order. A copy of any order issued

under this subsection shall be sent to the appropriate State agency of the State involved if the State has primary enforcement responsibility for public water systems in that State. Any order issued under this subsection shall state with reasonable specificity the nature of the violation. In any case in which an order under this subsection is issued to a corporation, a copy of such order shall be issued to appropriate corporate officers.

(3)(A) Any person who violates, or fails or refuses to comply with, an order under this subsection shall be liable to the United States for a civil penalty of not more than $25,000 per day of violation.

(B) In a case in which a civil penalty sought by the Administrator under this paragraph does not exceed $5,000, the penalty shall be assessed by the Administrator after notice and opportunity for a public hearing (unless the person against whom the penalty is assessed requests a hearing on the record in accordance with section 554 of title 5). In a case in which a civil penalty sought by the Administrator under this paragraph exceeds $5,000, but does not exceed $25,000, the penalty shall be assessed by the Administrator after notice and opportunity for a hearing on the record in accordance with section 554 of title 5.

(C) Whenever any civil penalty sought by the Administrator under this subsection for a violation of an applicable requirement exceeds $25,000, the penalty shall be assessed by a civil action brought by the Administrator in the appropriate United States district court (as determined under the provisions of title 28).

(D) If any person fails to pay an assessment of a civil penalty after it has become a final and unappealable order, or after the appropriate court of appeals has entered final judgment in favor of the Administrator, the Attorney General shall recover the amount for which such person is liable in any appropriate district court of the United States. In any such action, the validity and appropriateness of the final order imposing the civil penalty shall not be subject to review.

(h) Consolidation incentive

(1) In general

An owner or operator of a public water system may submit to the State in which the system is located (if the State has primary enforcement responsibility under section 300g–2 of this title) or to the Administrator (if the State does not have primary enforcement responsibility) a plan (including specific measures and schedules) for—

(A) the physical consolidation of the system with 1 or more other systems;

(B) the consolidation of significant management and administrative functions of the system with 1 or more other systems; or

(C) the transfer of ownership of the system that may reasonably be expected to improve drinking water quality.

(2) Consequences of approval

If the State or the Administrator approves a plan pursuant to paragraph (1), no enforcement action shall be taken pursuant to this part with respect to a specific violation identified in the approved plan prior to the date that is the earlier of the date on which consolidation is completed according to the plan or the date that is 2 years after the plan is approved.

(i) "Applicable requirement" defined

In this section, the term "applicable requirement" means—

(1) a requirement of section 300g–1, 300g–3, 300g–4, 300g–5, 300g–6[1] 300i–2, 300j, or 300j–4 of this title;

(2) a regulation promulgated pursuant to a section referred to in paragraph (1);

(3) a schedule or requirement imposed pursuant to a section referred to in paragraph (1); and

(4) a requirement of, or permit issued under, an applicable State program for which the Administrator has made a determination that the requirements of section 300g–2 of this title have been satisfied, or an applicable State program approved pursuant to this part.

(July 1, 1944, ch. 373, title XIV, § 1414, as added Pub. L. 93–523, § 2(a), Dec. 16, 1974, 88 Stat. 1666; amended Pub. L. 95–190, § 12(b), Nov. 16, 1977, 91 Stat. 1398; Pub. L. 99–339, title I, §§ 102, 103, June 19, 1986, 100 Stat. 647, 648; Pub. L. 104–182, title I, §§ 113(a), 114(a), Aug. 6, 1996, 110 Stat. 1634, 1636; Pub. L. 107–188, title IV, § 403(1), June 12, 2002, 116 Stat. 687.)

AMENDMENTS

2002—Subsec. (i)(1). Pub. L. 107–188 inserted "300i–2" after "300g–6".

1996—Subsec. (a)(1)(A). Pub. L. 104–182, § 113(a)(1)(A)(i)(II), substituted "with the requirement" for "with such regulation or requirement" in concluding provisions.

Subsec. (a)(1)(A)(i). Pub. L. 104–182, § 113(a)(1)(A)(i)(I), substituted "any applicable requirement" for "any national primary drinking water regulation in effect under section 300g–1 of this title".

Subsec. (a)(1)(B). Pub. L. 104–182, § 113(a)(1)(A)(ii), substituted "such applicable requirement" for "such regulation or requirement".

Subsec. (a)(2). Pub. L. 104–182, § 113(a)(1)(B), added par. (2) and struck out former par. (2) which read as follows: "Whenever, on the basis of information available to him, the Administrator finds during a period during which a State does not have primary enforcement responsibility for public water systems that a public water system in such State—

"(A) for which a variance under section 300g–4(a)(2) or an exemption under section 300g–5(f) of this title is not in effect, does not comply with any national primary drinking water regulation in effect under section 300g–1 of this title, or

"(B) for which a variance under section 300g–4(a)(2) or an exemption under section 300g–5(f) of this title is in effect, does not comply with any schedule or other requirement imposed pursuant thereto,

the Administrator shall issue an order under subsection (g) of this section requiring the public water system to comply with such regulation or requirement or the Administrator shall commence a civil action under subsection (b) of this section."

Subsec. (b). Pub. L. 104–182, § 113(a)(2), substituted "any applicable requirement" for "a national primary drinking water regulation" in introductory provisions.

Subsec. (c). Pub. L. 104–182, § 114(a), amended subsec. (c) generally. Prior to amendment, subsec. (c) related to notice of owner or operator of public water system to persons served, regulations for form, manner, and

[1] So in original. There probably should be a comma.

frequency of notice, amendment of regulations to provide different types and frequencies of notice, and penalties.

Subsec. (g)(1). Pub. L. 104–182, § 113(a)(3)(A), substituted "applicable requirement" for "regulation, schedule, or other requirement" in two places.

Subsec. (g)(2). Pub. L. 104–182, § 113(a)(3)(B), substituted "effect, in the case" for "effect until after notice and opportunity for public hearing and, in the case" and "regarding the order" for "regarding the proposed order" and struck out "proposed to be" after "A copy of any order".

Subsec. (g)(3)(B). Pub. L. 104–182, § 113(a)(3)(C)(i), added subpar. (B) and struck out former subpar. (B) which read as follows: "Whenever any civil penalty sought by the Administrator under this paragraph does not exceed a total of $5,000, the penalty shall be assessed by the Administrator after notice and opportunity for a hearing on the record in accordance with section 554 of title 5."

Subsec. (g)(3)(C). Pub. L. 104–182, § 113(a)(3)(C)(ii), substituted "subsection for a violation of an applicable requirement exceeds $25,000" for "paragraph exceeds $5,000".

Subsecs. (h), (i). Pub. L. 104–182, § 113(a)(4), added subsecs. (h) and (i).

1986—Pub. L. 99–339, § 102(d)(2), substituted "Enforcement" for "Failure of State to assure enforcement" in section catchline.

Subsec. (a)(1)(A). Pub. L. 99–339, § 102(a), inserted "and such public water system" after "notify the State" in provisions following cl. (ii).

Subsec. (a)(1)(B). Pub. L. 99–339, § 102(b)(1), amended subpar. (B) generally, substituting provisions which relate to issuance of an order to public water system to comply with regulations, or commencement of civil action if the State has not commenced appropriate enforcement action for provisions which related to public notice of noncompliance and commencement of civil action by Administrator if State failed to take steps to obtain compliance by public water system.

Subsec. (a)(2). Pub. L. 99–339, § 102(b)(2), substituted "the Administrator shall issue an order under subsection (g) of this section requiring the public water system to comply with such regulation or requirement or the Administrator shall commence a civil action under subsection (b) of this section" for "he may commence a civil action under subsection (b) of this section".

Subsec. (b). Pub. L. 99–339, § 102(c), inserted ", with an order issued under subsection (g) of this section," before "or with any schedule" and substituted "there has been a violation" for "there has been a willful violation" and "$25,000" for "$5,000".

Subsec. (c). Pub. L. 99–339, § 103, substituted provisions relating to amendment of regulations within fifteen months after June 19, 1986, to provide different types and frequencies of notice based on the differences between violations which are intermittent or continuous, manner and content of notices, notice required to public served by owner or operator of public water system, and civil penalty of $25,000, for provisions relating to form, manner, and frequency of notice based on three month billing period for water bills, notice required to public served by owner or operator of public water system, and civil penalty of $5,000.

Subsec. (g). Pub. L. 99–339, § 102(d), added subsec. (g).

1977—Subsec. (c). Pub. L. 95–190 inserted provisions relating to frequency of required notice, and notice respecting contaminant levels, and substituted "issued under this subsection" for "thereunder".

§ 300g–4. Variances

(a) Characteristics of raw water sources; specific treatment technique; notice to Administrator, reasons for variance; compliance, enforcement; approval or revision of schedules and revocation of variances; review of variances and schedules; publication in Federal Register, notice and results of review; notice to State; considerations respecting abuse of discretion in granting variances or failing to prescribe schedules; State corrective action; authority of Administrator in a State without primary enforcement responsibility; alternative treatment techniques

Notwithstanding any other provision of this part, variances from national primary drinking water regulations may be granted as follows:

(1)(A) A State which has primary enforcement responsibility for public water systems may grant one or more variances from an applicable national primary drinking water regulation to one or more public water systems within its jurisdiction which, because of characteristics of the raw water sources which are reasonably available to the systems, cannot meet the requirements respecting the maximum contaminant levels of such drinking water regulation. A variance may be issued to a system on condition that the system install the best technology, treatment techniques, or other means, which the Administrator finds are available (taking costs into consideration), and based upon an evaluation satisfactory to the State that indicates that alternative sources of water are not reasonably available to the system. The Administrator shall propose and promulgate his finding of the best available technology, treatment techniques or other means available for each contaminant for purposes of this subsection at the time he proposes and promulgates a maximum contaminant level for each such contaminant. The Administrator's finding of best available technology, treatment techniques or other means for purposes of this subsection may vary depending on the number of persons served by the system or for other physical conditions related to engineering feasibility and costs of compliance with maximum contaminant levels as considered appropriate by the Administrator. Before a State may grant a variance under this subparagraph, the State must find that the variance will not result in an unreasonable risk to health. If a State grants a public water system a variance under this subparagraph, the State shall prescribe at the the[1] time the variance is granted, a schedule for—

(i) compliance (including increments of progress) by the public water system with each containment level requirement with respect to which the variance was granted, and

(ii) implementation by the public water system of such additional control measures as the State may require for each contaminant, subject to such contaminant level requirement, during the period ending on the date compliance with such requirement is required.

[1] So in original.

Before a schedule prescribed by a State pursuant to this subparagraph may take effect, the State shall provide notice and opportunity for a public hearing on the schedule. A notice given pursuant to the preceding sentence may cover the prescribing of more than one such schedule and a hearing held pursuant to such notice shall include each of the schedules covered by the notice. A schedule prescribed pursuant to this subparagraph for a public water system granted a variance shall require compliance by the system with each contaminant level requirement with respect to which the variance was granted as expeditiously as practicable (as the State may reasonably determine).

(B) A State which has primary enforcement responsibility for public water systems may grant to one or more public water systems within its jurisdiction one or more variances from any provision of the national primary drinking water regulation which requires the use of a specified treatment technique with respect to a contaminant if the public water system applying for the variance demonstrates to the satisfaction of the State that such treatment technique is not necessary to protect the health of persons because of the nature of the raw water source of such system. A variance granted under this subparagraph shall be conditioned on such monitoring and other requirements as the Administrator may prescribe.

(C) Before a variance proposed to be granted by a State under subparagraph (A) or (B) may take effect, such State shall provide notice and opportunity for public hearing on the proposed variance. A notice given pursuant to the preceding sentence may cover the granting of more than one variance and a hearing held pursuant to such notice shall include each of the variances covered by the notice. The State shall promptly notify the Administrator of all variances granted by it. Such notification shall contain the reason for the variance (and in the case of a variance under subparagraph (A), the basis for the finding required by that subparagraph before the granting of the variance) and documentation of the need for the variance.

(D) Each public water system's variance granted by a State under subparagraph (A) shall be conditioned by the State upon compliance by the public water system with the schedule prescribed by the State pursuant to that subparagraph. The requirements of each schedule prescribed by a State pursuant to that subparagraph shall be enforceable by the State under its laws. Any requirement of a schedule on which a variance granted under that subparagraph is conditioned may be enforced under section 300g–3 of this title as if such requirement was part of a national primary drinking water regulation.

(E) Each schedule prescribed by a State pursuant to subparagraph (A) shall be deemed approved by the Administrator unless the variance for which it was prescribed is revoked by the Administrator under subparagraph (G) or the schedule is revised by the Administrator under such subparagraph.

(F) Not later than 18 months after the effective date of the interim national primary drinking water regulations the Administrator shall complete a comprehensive review of the variances granted under subparagraph (A) (and schedules prescribed pursuant thereto) and under subparagraph (B) by the States during the one-year period beginning on such effective date. The Administrator shall conduct such subsequent reviews of variances and schedules as he deems necessary to carry out the purposes of this subchapter, but each subsequent review shall be completed within each 3-year period following the completion of the first review under this subparagraph. Before conducting any review under this subparagraph, the Administrator shall publish notice of the proposed review in the Federal Register. Such notice shall (i) provide information respecting the location of data and other information respecting the variances to be reviewed (including data and other information concerning new scientific matters bearing on such variances), and (ii) advise of the opportunity to submit comments on the variances reviewed and on the need for continuing them. Upon completion of any such review, the Administrator shall publish in the Federal Register the results of his review together with findings responsive to comments submitted in connection with such review.

(G)(i) If the Administrator finds that a State has, in a substantial number of instances, abused its discretion in granting variances under subparagraph (A) or (B) or that in a substantial number of cases the State has failed to prescribe schedules in accordance with subparagraph (A), the Administrator shall notify the State of his findings. In determining if a State has abused its discretion in granting variances in a substantial number of instances, the Administrator shall consider the number of persons who are affected by the variances and if the requirements applicable to the granting of the variances were complied with. A notice under this clause shall—

(I) identify each public water system with respect to which the finding was made,

(II) specify the reasons for the finding, and

(III) as appropriate, propose revocations of specific variances or propose revised schedules or other requirements for specific public water systems granted variances, or both.

(ii) The Administrator shall provide reasonable notice and public hearing on the provisions of each notice given pursuant to clause (i) of this subparagraph. After a hearing on a notice pursuant to such clause, the Administrator shall (I) rescind the finding for which the notice was given and promptly notify the State of such rescission, or (II) promulgate (with such modifications as he deems appropriate) such variance revocations and revised schedules or other requirements proposed in such notice as he deems appropriate. Not later than 180 days after the date a notice is given pursuant to clause (i) of this subparagraph, the Administrator shall complete the hearing on the notice and take the action required by the preceding sentence.

(iii) If a State is notified under clause (i) of this subparagraph of a finding of the Adminis-

trator made with respect to a variance granted a public water system within that State or to a schedule or other requirement for a variance and if, before a revocation of such variance or a revision of such schedule or other requirement promulgated by the Administrator takes effect, the State takes corrective action with respect to such variance or schedule or other requirement which the Administrator determines makes his finding inapplicable to such variance or schedule or other requirement, the Administrator shall rescind the application of his finding to that variance on schedule or other requirement. No variance revocation or revised schedule or other requirement may take effect before the expiration of 90 days following the date of the notice in which the revocation or revised schedule or other requirement was proposed.

(2) If a State does not have primary enforcement responsibility for public water systems, the Administrator shall have the same authority to grant variances in such State as the State would have under paragraph (1) if it had primary enforcement responsibility.

(3) The Administrator may grant a variance from any treatment technique requirement of a national primary drinking water regulation upon a showing by any person that an alternative treatment technique not included in such requirement is at least as efficient in lowering the level of the contaminant with respect to which such requirement was prescribed. A variance under this paragraph shall be conditioned on the use of the alternative treatment technique which is the basis of the variance.

(b) Enforcement of schedule or other requirement

Any schedule or other requirement on which a variance granted under paragraph (1)(B) or (2) of subsection (a) of this section is conditioned may be enforced under section 300g–3 of this title as if such schedule or other requirement was part of a national primary drinking water regulation.

(c) Applications for variances; regulations: reasonable time for acting

If an application for a variance under subsection (a) of this section is made, the State receiving the application or the Administrator, as the case may be, shall act upon such application within a reasonable period (as determined under regulations prescribed by the Administrator) after the date of its submission.

(d) "Treatment technique requirement" defined

For purposes of this section, the term "treatment technique requirement" means a requirement in a national primary drinking water regulation which specifies for a contaminant (in accordance with section 300f(1)(C)(ii) of this title) each treatment technique known to the Administrator which leads to a reduction in the level of such contaminant sufficient to satisfy the requirements of section 300g–1(b) of this title.

(e) Small system variances

(1) In general

A State exercising primary enforcement responsibility for public water systems under section 300g–2 of this title (or the Administrator in nonprimacy States) may grant a variance under this subsection for compliance with a requirement specifying a maximum contaminant level or treatment technique contained in a national primary drinking water regulation to—

(A) public water systems serving 3,300 or fewer persons; and

(B) with the approval of the Administrator pursuant to paragraph (9), public water systems serving more than 3,300 persons but fewer than 10,000 persons,

if the variance meets each requirement of this subsection.

(2) Availability of variances

A public water system may receive a variance pursuant to paragraph (1), if—

(A) the Administrator has identified a variance technology under section 300g–1(b)(15) of this title that is applicable to the size and source water quality conditions of the public water system;

(B) the public water system installs, operates, and maintains, in accordance with guidance or regulations issued by the Administrator, such treatment technology, treatment technique, or other means; and

(C) the State in which the system is located determines that the conditions of paragraph (3) are met.

(3) Conditions for granting variances

A variance under this subsection shall be available only to a system—

(A) that cannot afford to comply, in accordance with affordability criteria established by the Administrator (or the State in the case of a State that has primary enforcement responsibility under section 300g–2 of this title), with a national primary drinking water regulation, including compliance through—

(i) treatment;

(ii) alternative source of water supply; or

(iii) restructuring or consolidation (unless the Administrator (or the State in the case of a State that has primary enforcement responsibility under section 300g–2 of this title) makes a written determination that restructuring or consolidation is not practicable); and

(B) for which the Administrator (or the State in the case of a State that has primary enforcement responsibility under section 300g–2 of this title) determines that the terms of the variance ensure adequate protection of human health, considering the quality of the source water for the system and the removal efficiencies and expected useful life of the treatment technology required by the variance.

(4) Compliance schedules

A variance granted under this subsection shall require compliance with the conditions of the variance not later than 3 years after the date on which the variance is granted, except that the Administrator (or the State in the case of a State that has primary enforcement

responsibility under section 300g–2 of this title) may allow up to 2 additional years to comply with a variance technology, secure an alternative source of water, restructure or consolidate if the Administrator (or the State) determines that additional time is necessary for capital improvements, or to allow for financial assistance provided pursuant to section 300j–12 of this title or any other Federal or State program.

(5) Duration of variances

The Administrator (or the State in the case of a State that has primary enforcement responsibility under section 300g–2 of this title) shall review each variance granted under this subsection not less often than every 5 years after the compliance date established in the variance to determine whether the system remains eligible for the variance and is conforming to each condition of the variance.

(6) Ineligibility for variances

A variance shall not be available under this subsection for—

(A) any maximum contaminant level or treatment technique for a contaminant with respect to which a national primary drinking water regulation was promulgated prior to January 1, 1986; or

(B) a national primary drinking water regulation for a microbial contaminant (including a bacterium, virus, or other organism) or an indicator or treatment technique for a microbial contaminant.

(7) Regulations and guidance

(A) In general

Not later than 2 years after August 6, 1996, and in consultation with the States, the Administrator shall promulgate regulations for variances to be granted under this subsection. The regulations shall, at a minimum, specify—

(i) procedures to be used by the Administrator or a State to grant or deny variances, including requirements for notifying the Administrator and consumers of the public water system that a variance is proposed to be granted (including information regarding the contaminant and variance) and requirements for a public hearing on the variance before the variance is granted;

(ii) requirements for the installation and proper operation of variance technology that is identified (pursuant to section 300g–1(b)(15) of this title) for small systems and the financial and technical capability to operate the treatment system, including operator training and certification;

(iii) eligibility criteria for a variance for each national primary drinking water regulation, including requirements for the quality of the source water (pursuant to section 300g–1(b)(15)(A) of this title); and

(iv) information requirements for variance applications.

(B) Affordability criteria

Not later than 18 months after August 6, 1996, the Administrator, in consultation with the States and the Rural Utilities Service of the Department of Agriculture, shall publish information to assist the States in developing affordability criteria. The affordability criteria shall be reviewed by the States not less often than every 5 years to determine if changes are needed to the criteria.

(8) Review by the Administrator

(A) In general

The Administrator shall periodically review the program of each State that has primary enforcement responsibility for public water systems under section 300g–2 of this title with respect to variances to determine whether the variances granted by the State comply with the requirements of this subsection. With respect to affordability, the determination of the Administrator shall be limited to whether the variances granted by the State comply with the affordability criteria developed by the State.

(B) Notice and publication

If the Administrator determines that variances granted by a State are not in compliance with affordability criteria developed by the State and the requirements of this subsection, the Administrator shall notify the State in writing of the deficiencies and make public the determination.

(9) Approval of variances

A State proposing to grant a variance under this subsection to a public water system serving more than 3,300 and fewer than 10,000 persons shall submit the variance to the Administrator for review and approval prior to the issuance of the variance. The Administrator shall approve the variance if it meets each of the requirements of this subsection. The Administrator shall approve or disapprove the variance within 90 days. If the Administrator disapproves a variance under this paragraph, the Administrator shall notify the State in writing of the reasons for disapproval and the variance may be resubmitted with modifications to address the objections stated by the Administrator.

(10) Objections to variances

(A) By the Administrator

The Administrator may review and object to any variance proposed to be granted by a State, if the objection is communicated to the State not later than 90 days after the State proposes to grant the variance. If the Administrator objects to the granting of a variance, the Administrator shall notify the State in writing of each basis for the objection and propose a modification to the variance to resolve the concerns of the Administrator. The State shall make the recommended modification or respond in writing to each objection. If the State issues the variance without resolving the concerns of the Administrator, the Administrator may overturn the State decision to grant the variance if the Administrator determines that the State decision does not comply with this subsection.

(B) Petition by consumers

Not later than 30 days after a State exercising primary enforcement responsibility for public water systems under section 300g–2 of this title proposes to grant a variance for a public water system, any person served by the system may petition the Administrator to object to the granting of a variance. The Administrator shall respond to the petition and determine whether to object to the variance under subparagraph (A) not later than 60 days after the receipt of the petition.

(C) Timing

No variance shall be granted by a State until the later of the following:

(i) 90 days after the State proposes to grant a variance.

(ii) If the Administrator objects to the variance, the date on which the State makes the recommended modifications or responds in writing to each objection.

(July 1, 1944, ch. 373, title XIV, § 1415, as added Pub. L. 93–523, § 2(a), Dec. 16, 1974, 88 Stat. 1669; amended Pub. L. 99–339, title I, § 104, June 19, 1986, 100 Stat. 649; Pub. L. 104–182, title I, §§ 102(c)(1), 115, 116, title V, § 501(a)(3), Aug. 6, 1996, 110 Stat. 1621, 1641, 1691.)

AMENDMENTS

1996—Subsec. (a)(1)(A). Pub. L. 104–182, § 501(a)(3), inserted "the" before "time the variance is granted," in introductory provisions.

Pub. L. 104–182, § 115, in second sentence, substituted "be issued to a system on condition that the system install" for "only be issued to a system after the system's application of" and inserted ", and based upon an evaluation satisfactory to the State that indicates that alternative sources of water are not reasonably available to the system" after "(taking costs into consideration)".

Subsec. (d). Pub. L. 104–182, § 102(c)(1), substituted "section 300g–1(b)" for "section 300g–1(b)(3)".

Subsec. (e). Pub. L. 104–182, § 116, added subsec. (e).

1986—Subsec. (a)(1)(A). Pub. L. 99–339, § 104(1)–(3), substituted "such drinking water regulation. A variance may only be issued to a system after the system's application" for "such drinking water regulation despite application", struck out "generally" after "finds are", inserted provisions relating to proposal and promulgation by Administrator of a finding on best available technology, treatment techniques or other means available for each contaminant at time of proposal and promulgation of maximum contaminant levels, and substituted "at the time" for "within one year of the date".

Subsec. (a)(1)(A)(ii). Pub. L. 99–339, § 104(4), substituted "water system of such additional control" for "water system of such control".

§ 300g–5. Exemptions

(a) Requisite findings

A State which has primary enforcement responsibility may exempt any public water system within the State's jurisdiction from any requirement respecting a maximum contaminant level or any treatment technique requirement, or from both, of an applicable national primary drinking water regulation upon a finding that—

(1) due to compelling factors (which may include economic factors, including qualification of the public water system as a system serving a disadvantaged community pursuant to section 300j–12(d) of this title), the public water system is unable to comply with such contaminant level or treatment technique requirement, or to implement measures to develop an alternative source of water supply,

(2) the public water system was in operation on the effective date of such contaminant level or treatment technique requirement, or, for a system that was not in operation by that date, only if no reasonable alternative source of drinking water is available to such new system,

(3) the granting of the exemption will not result in an unreasonable risk to health;[1] and

(4) management or restructuring changes (or both) cannot reasonably be made that will result in compliance with this subchapter or, if compliance cannot be achieved, improve the quality of the drinking water.

(b) Compliance schedule and implementation of control measures; notice and hearing; dates for compliance with schedule; compliance, enforcement; approval or revision of schedules and revocation of exemptions

(1) If a State grants a public water system an exemption under subsection (a) of this section, the State shall prescribe, at the time the exemption is granted, a schedule for—

(A) compliance (including increments of progress or measures to develop an alternative source of water supply) by the public water system with each contaminant level requirement or treatment technique requirement with respect to which the exemption was granted, and

(B) implementation by the public water system of such control measures as the State may require for each contaminant, subject to such contaminant level requirement or treatment technique requirement, during the period ending on the date compliance with such requirement is required.

Before a schedule prescribed by a State pursuant to this subsection may take effect, the State shall provide notice and opportunity for a public hearing on the schedule. A notice given pursuant to the preceding sentence may cover the prescribing of more than one such schedule and a hearing held pursuant to such notice shall include each of the schedules covered by the notice.

(2)(A) A schedule prescribed pursuant to this subsection for a public water system granted an exemption under subsection (a) of this section shall require compliance by the system with each contaminant level and treatment technique requirement with respect to which the exemption was granted as expeditiously as practicable (as the State may reasonably determine) but not later than 3 years after the otherwise applicable compliance date established in section 300g–1(b)(10) of this title.

(B) No exemption shall be granted unless the public water system establishes that—

(i) the system cannot meet the standard without capital improvements which cannot be completed prior to the date established pursuant to section 300g–1(b)(10) of this title;

[1] So in original. The semicolon probably should be a comma.

(ii) in the case of a system which needs financial assistance for the necessary improvements, the system has entered into an agreement to obtain such financial assistance or assistance pursuant to section 300j–12 of this title, or any other Federal or State program is reasonably likely to be available within the period of the exemption; or

(iii) the system has entered into an enforceable agreement to become a part of a regional public water system; and

the system is taking all practicable steps to meet the standard.

(C) In the case of a system which does not serve more than a population of 3,300 and which needs financial assistance for the necessary improvements, an exemption granted under clause (i) or (ii) of subparagraph (B) may be renewed for one or more additional 2-year periods, but not to exceed a total of 6 years, if the system establishes that it is taking all practicable steps to meet the requirements of subparagraph (B).

(D) LIMITATION.—A public water system may not receive an exemption under this section if the system was granted a variance under section 300g–4(e) of this title.

(3) Each public water system's exemption granted by a State under subsection (a) of this section shall be conditioned by the State upon compliance by the public water system with the schedule prescribed by the State pursuant to this subsection. The requirements of each schedule prescribed by a State pursuant to this subsection shall be enforceable by the State under its laws. Any requirement of a schedule on which an exemption granted under this section is conditioned may be enforced under section 300g–3 of this title as if such requirement was part of a national primary drinking water regulation.

(4) Each schedule prescribed by a State pursuant to this subsection shall be deemed approved by the Administrator unless the exemption for which it was prescribed is revoked by the Administrator under subsection (d)(2) of this section or the schedule is revised by the Administrator under such subsection.

(c) Notice to Administrator; reasons for exemption

Each State which grants an exemption under subsection (a) of this section shall promptly notify the Administrator of the granting of such exemption. Such notification shall contain the reasons for the exemption (including the basis for the finding required by subsection (a)(3) of this section before the exemption may be granted) and document the need for the exemption.

(d) Review of exemptions and schedules; publication in Federal Register, notice and results of review; notice to State; considerations respecting abuse of discretion in granting exemptions or failing to prescribe schedules; State corrective action

(1) Not later than 18 months after the effective date of the interim national primary drinking water regulations the Administrator shall complete a comprehensive review of the exemptions granted (and schedules prescribed pursuant thereto) by the States during the one-year period beginning on such effective date. The Administrator shall conduct such subsequent reviews of exemptions and schedules as he deems necessary to carry out the purposes of this subchapter, but each subsequent review shall be completed within each 3-year period following the completion of the first review under this subparagraph. Before conducting any review under this subparagraph, the Administrator shall publish notice of the proposed review in the Federal Register. Such notice shall (A) provide information respecting the location of data and other information respecting the exemptions to be reviewed (including data and other information concerning new scientific matters bearing on such exemptions), and (B) advise of the opportunity to submit comments on the exemptions reviewed and on the need for continuing them. Upon completion of any such review, the Administrator shall publish in the Federal Register the results of his review, together with findings responsive to comments submitted in connection with such review.

(2)(A) If the Administrator finds that a State has, in a substantial number of instances, abused its discretion in granting exemptions under subsection (a) of this section or failed to prescribe schedules in accordance with subsection (b) of this section, the Administrator shall notify the State of his findings. In determining if a State has abused its discretion in granting exemptions in a substantial number of instances, the Administrator shall consider the number of persons who are affected by the exemptions and if the requirements applicable to the granting of the exemptions were complied with. A notice under this subparagraph shall—

(i) identify each exempt public water system with respect to which the finding was made,

(ii) specify the reasons for the finding, and

(iii) as appropriate, propose revocations of specific exemptions or propose revised schedules for specific exempt public water systems, or both.

(B) The Administrator shall provide reasonable notice and public hearing on the provisions of each notice given pursuant to subparagraph (A). After a hearing on notice pursuant to subparagraph (A), the Administrator shall (i) rescind the finding for which the notice was given and promptly notify the State of such rescission, or (ii) promulgate (with such modifications as he deems appropriate) such exemption revocations and revised schedules proposed in such notice as he deems appropriate. Not later than 180 days after the date a notice is given pursuant to subparagraph (A), the Administrator shall complete the hearing on the notice and take the action required by the preceding sentence.

(C) If a State is notified under subparagraph (A) of a finding of the Administrator made with respect to an exemption granted a public water system within that State or to a schedule prescribed pursuant to such an exemption and if before a revocation of such exemption or a revision of such schedule promulgated by the Administrator takes effect the State takes corrective action with respect to such exemption or schedule which the Administrator determines makes his finding inapplicable to such exemption or schedule, the Administrator shall re-

scind the application of his finding to that exemption or schedule. No exemption revocation or revised schedule may take effect before the expiration of 90 days following the date of the notice in which the revocation or revised schedule was proposed.

(e) "Treatment technique requirement" defined

For purposes of this section, the term "treatment technique requirement" means a requirement in a national primary drinking water regulation which specifies for a contaminant (in accordance with section 300f(1)(C)(ii) of this title) each treatment technique known to the Administrator which leads to a reduction in the level of such contaminant sufficient to satisfy the requirements of section 300g–1(b) of this title.

(f) Authority of Administrator in a State without primary enforcement responsibility

If a State does not have primary enforcement responsibility for public water systems, the Administrator shall have the same authority to exempt public water systems in such State from maximum contaminant level requirements and treatment technique requirements under the same conditions and in the same manner as the State would be authorized to grant exemptions under this section if it had primary enforcement responsibility.

(g) Applications for exemptions; regulations; reasonable time for acting

If an application for an exemption under this section is made, the State receiving the application or the Administrator, as the case may be, shall act upon such application within a reasonable period (as determined under regulations prescribed by the Administrator) after the date of its submission.

(July 1, 1944, ch. 373, title XIV, §1416, as added Pub. L. 93–523, §2(a), Dec. 16, 1974, 88 Stat. 1672; amended Pub. L. 95–190, §10(a), Nov. 16, 1977, 91 Stat. 1398; Pub. L. 96–502, §§1, 4(b), Dec. 5, 1980, 94 Stat. 2737, 2738; Pub. L. 99–339, title I, §§101(c)(4), 105, June 19, 1986, 100 Stat. 646, 649; Pub. L. 104–182, title I, §117(a), Aug. 6, 1996, 110 Stat. 1644.)

AMENDMENTS

1996—Subsec. (a)(1). Pub. L. 104–182, §117(a)(1), inserted ", including qualification of the public water system as a system serving a disadvantaged community pursuant to section 300j–12(d) of this title" after "(which may include economic factors" and "or to implement measures to develop an alternative source of water supply," after "treatment technique requirement,".

Subsec. (a)(4). Pub. L. 104–182, §117(a)(2), added par. (4).

Subsec. (b)(1)(A). Pub. L. 104–182, §117(a)(3), substituted "(including increments of progress or measures to develop an alternative source of water supply)" for "(including increments of progress)" and "requirement or treatment" for "requirement and treatment".

Subsec. (b)(2)(A). Pub. L. 104–182, §117(a)(4)(A), substituted "not later than 3 years after the otherwise applicable compliance date established in section 300g–1(b)(10) of this title." for "(except as provided in subparagraph (B))—

"(i) in the case of an exemption granted with respect to a contaminant level or treatment technique requirement prescribed by the national primary drinking water regulations promulgated under section 300g–1(a) of this title, not later than 12 months after June 19, 1986; and

"(ii) in the case of an exemption granted with respect to a contaminant level or treatment technique requirement prescribed by national primary drinking water regulations, other than a regulation referred to in section 300g–1(a) of this title, 12 months after the date of the issuance of the exemption."

Subsec. (b)(2)(B). Pub. L. 104–182, §117(a)(4)(A), substituted "No exemption shall be granted unless" for "The final date for compliance provided in any schedule in the case of any exemption may be extended by the State (in the case of a State which has primary enforcement responsibility) or by the Administrator (in any other case) for a period not to exceed 3 years after the date of the issuance of the exemption if" in introductory provisions.

Subsec. (b)(2)(B)(i). Pub. L. 104–182, §117(a)(4)(B), substituted "prior to the date established pursuant to section 300g–1(b)(10) of this title" for "within the period of such exemption".

Subsec. (b)(2)(B)(ii). Pub. L. 104–182, §117(a)(4)(C), inserted "or assistance pursuant to section 300j–12 of this title, or any other Federal or State program is reasonably likely to be available within the period of the exemption" after "such financial assistance".

Subsec. (b)(2)(C). Pub. L. 104–182, §117(a)(4)(D), substituted "a population of 3,300" for "500 service connections" and inserted ", but not to exceed a total of 6 years," after "for one or more additional 2-year periods".

Subsec. (b)(2)(D). Pub. L. 104–182, §117(a)(4)(E), added subpar. (D).

1986—Subsec. (b)(1). Pub. L. 99–339, §105(a)(1), substituted "at the time" for "within one year of the date".

Subsec. (b)(2)(A)(i). Pub. L. 99–339, §105(a)(2), struck out "interim" before "national primary" and substituted "not later than 12 months after June 19, 1986" for "not later than January 1, 1984".

Subsec. (b)(2)(A)(ii). Pub. L. 99–339, §105(a)(3), struck out "revised" before "national primary" and substituted "other than a regulation referred to in section 300g–1(a) of this title, 12 months after the date of the issuance of the exemption" for "not later than seven years after the date such requirement takes effect".

Subsec. (b)(2)(B). Pub. L. 99–339, §105(a)(4), amended subpar. (B) generally. Prior to amendment, subpar. (B) read as follows: "Notwithstanding clauses (i) and (ii) of subparagraph (A) of this paragraph, the final date for compliance prescribed in a schedule prescribed pursuant to this subsection for an exemption granted for a public water system which (as determined by the State granting the exemption) has entered into an enforceable agreement to become a part of a regional public water system shall—

"(i) in the case of a schedule prescribed for an exemption granted with respect to a contaminant level or treatment technique requirement prescribed by interim national primary drinking water regulations, be not later than January 1, 1986; and

"(ii) in the case of a schedule prescribed for an exemption granted with respect to a contaminant level or treatment technique requirement prescribed by revised national primary drinking water regulations, be not later than nine years after such requirement takes effect."

Subsec. (b)(2)(C). Pub. L. 99–339, §105(a)(4), added subpar. (C).

Subsec. (e). Pub. L. 99–339, §101(c)(4), substituted "300g–1(b)" for "300g–1(b)(3)".

1980—Subsec. (a)(2). Pub. L. 96–502, §4(b), substituted "treatment technique requirement, or, for a system that was not in operation by that date, only if no reasonable alternative source of drinking water is available to such new system, and" for "treatment technique requirement, and".

Subsec. (b)(2)(A)(i). Pub. L. 96–502, §1, substituted "January 1, 1984" for "January 1, 1981".

Subsec. (b)(2)(B)(i). Pub. L. 96–502, §1, substituted "January 1, 1986" for "January 1, 1983".

1977—Subsec. (b)(1). Pub. L. 95–190 substituted "contaminant" for "containment" wherever appearing.

§ 300g–6. Prohibition on use of lead pipes, solder, and flux

(a) In general

(1) Prohibitions

(A) In general

No person may use any pipe, any pipe or plumbing fitting or fixture, any solder, or any flux, after June 19, 1986, in the installation or repair of—

(i) any public water system; or

(ii) any plumbing in a residential or nonresidential facility providing water for human consumption,

that is not lead free (within the meaning of subsection (d) of this section).

(B) Leaded joints

Subparagraph (A) shall not apply to leaded joints necessary for the repair of cast iron pipes.

(2) Public notice requirements

(A) In general

Each owner or operator of a public water system shall identify and provide notice to persons that may be affected by lead contamination of their drinking water where such contamination results from either or both of the following:

(i) The lead content in the construction materials of the public water distribution system.

(ii) Corrosivity of the water supply sufficient to cause leaching of lead.

The notice shall be provided in such manner and form as may be reasonably required by the Administrator. Notice under this paragraph shall be provided notwithstanding the absence of a violation of any national drinking water standard.

(B) Contents of notice

Notice under this paragraph shall provide a clear and readily understandable explanation of—

(i) the potential sources of lead in the drinking water,

(ii) potential adverse health effects,

(iii) reasonably available methods of mitigating known or potential lead content in drinking water,

(iv) any steps the system is taking to mitigate lead content in drinking water, and

(v) the necessity for seeking alternative water supplies, if any.

(3) Unlawful acts

Effective 2 years after August 6, 1996, it shall be unlawful—

(A) for any person to introduce into commerce any pipe, or any pipe or plumbing fitting or fixture, that is not lead free, except for a pipe that is used in manufacturing or industrial processing;

(B) for any person engaged in the business of selling plumbing supplies, except manufacturers, to sell solder or flux that is not lead free; or

(C) for any person to introduce into commerce any solder or flux that is not lead free unless the solder or flux bears a prominent label stating that it is illegal to use the solder or flux in the installation or repair of any plumbing providing water for human consumption.

(b) State enforcement

(1) Enforcement of prohibition

The requirements of subsection (a)(1) of this section shall be enforced in all States effective 24 months after June 19, 1986. States shall enforce such requirements through State or local plumbing codes, or such other means of enforcement as the State may determine to be appropriate.

(2) Enforcement of public notice requirements

The requirements of subsection (a)(2) of this section shall apply in all States effective 24 months after June 19, 1986.

(c) Penalties

If the Administrator determines that a State is not enforcing the requirements of subsection (a) of this section as required pursuant to subsection (b) of this section, the Administrator may withhold up to 5 percent of Federal funds available to that State for State program grants under section 300j–2(a) of this title.

(d) "Lead free" defined

For purposes of this section, the term ''lead free''—

(1) when used with respect to solders and flux refers to solders and flux containing not more than 0.2 percent lead;

(2) when used with respect to pipes and pipe fittings refers to pipes and pipe fittings containing not more than 8.0 percent lead; and

(3) when used with respect to plumbing fittings and fixtures, refers to plumbing fittings and fixtures in compliance with standards established in accordance with subsection (e) of this section.

(e) Plumbing fittings and fixtures

(1) In general

The Administrator shall provide accurate and timely technical information and assistance to qualified third-party certifiers in the development of voluntary standards and testing protocols for the leaching of lead from new plumbing fittings and fixtures that are intended by the manufacturer to dispense water for human ingestion.

(2) Standards

(A) In general

If a voluntary standard for the leaching of lead is not established by the date that is 1 year after August 6, 1996, the Administrator shall, not later than 2 years after August 6, 1996, promulgate regulations setting a health-effects-based performance standard establishing maximum leaching levels from new plumbing fittings and fixtures that are intended by the manufacturer to dispense water for human ingestion. The standard

shall become effective on the date that is 5 years after the date of promulgation of the standard.

(B) Alternative requirement

If regulations are required to be promulgated under subparagraph (A) and have not been promulgated by the date that is 5 years after August 6, 1996, no person may import, manufacture, process, or distribute in commerce a new plumbing fitting or fixture, intended by the manufacturer to dispense water for human ingestion, that contains more than 4 percent lead by dry weight.

(July 1, 1944, ch. 373, title XIV, § 1417, as added Pub. L. 99–339, title I, § 109(a), June 19, 1986, 100 Stat. 651; amended Pub. L. 104–182, title I, § 118, title V, § 501(f)(1), Aug. 6, 1996, 110 Stat. 1645, 1691; Pub. L. 111–380, § 2(a), Jan. 4, 2011, 124 Stat. 4131.)

AMENDMENT OF SUBSECTIONS (a) AND (d)

Pub. L. 111–380, § 2, Jan. 4, 2011, 124 Stat. 4131, provided that, applicable beginning on the day that is 36 months after Jan. 4, 2011, this section is amended as follows:

(1) by adding at the end of subsection (a) the following:

''(4) Exemptions

''The prohibitions in paragraphs (1) and (3) shall not apply to—

''(A) pipes, pipe fittings, plumbing fittings, or fixtures, including backflow preventers, that are used exclusively for nonpotable services such as manufacturing, industrial processing, irrigation, outdoor watering, or any other uses where the water is not anticipated to be used for human consumption; or

''(B) toilets, bidets, urinals, fill valves, flushometer valves, tub fillers, shower valves, service saddles, or water distribution main gate valves that are 2 inches in diameter or larger.''; and

(2) by amending subsection (d) to read as follows:

(d) Definition of lead free

(1) In general

For the purposes of this section, the term ''lead free'' means—

(A) not containing more than 0.2 percent lead when used with respect to solder and flux; and

(B) not more than a weighted average of 0.25 percent lead when used with respect to the wetted surfaces of pipes, pipe fittings, plumbing fittings, and fixtures.

(2) Calculation

The weighted average lead content of a pipe, pipe fitting, plumbing fitting, or fixture shall be calculated by using the following formula: For each wetted component, the percentage of lead in the component shall be multiplied by the ratio of the wetted surface area of that component to the total wetted surface area of the entire product to arrive at the weighted percentage of lead of the component. The weighted percentage of lead of each wetted component shall be added together, and the sum of these weighted percentages shall constitute the weighted average lead content of the product. The lead content of the material used to produce wetted components shall be used to determine compliance with paragraph (1)(B). For lead content of materials that are provided as a range, the maximum content of the range shall be used.

AMENDMENTS

1996—Pub. L. 104–182, § 501(f)(1), made technical amendment to section catchline and subsec. (a) designation.

Subsec. (a)(1). Pub. L. 104–182, § 118(1), substituted ''Prohibitions'' for ''Prohibition'' in heading and amended text generally. Prior to amendment, text read as follows: ''Any pipe, solder, or flux, which is used after June 19, 1986, in the installation or repair of—

''(A) any public water system, or

''(B) any plumbing in a residential or nonresidential facility providing water for human consumption which is connected to a public water system,

shall be lead free (within the meaning of subsection (d) of this section). This paragraph shall not apply to leaded joints necessary for the repair of cast iron pipes.''

Subsec. (a)(2)(A). Pub. L. 104–182, § 118(2), inserted ''owner or operator of a'' after ''Each'' in introductory provisions.

Subsec. (a)(3). Pub. L. 104–182, § 118(3), added par. (3).

Subsec. (d)(3). Pub. L. 104–182, § 118(4), added par. (3).

Subsec. (e). Pub. L. 104–182, § 118(5), added subsec. (e).

EFFECTIVE DATE OF 2011 AMENDMENT

Pub. L. 111–380, § 2(b), Jan. 4, 2011, 124 Stat. 4132, provided that: ''The provisions of subsections (a)(4) and (d) of section 1417 of the Safe Drinking Water Act [42 U.S.C. 300g–6(a)(4), (d)], as added by this section, apply beginning on the day that is 36 months after the date of the enactment of this Act [Jan. 4, 2011].''

NOTIFICATION TO STATES

Section 109(b) of Pub. L. 99–339 provided that: ''The Administrator of the Environmental Protection Agency shall notify all States with respect to the requirements of section 1417 of the Public Health Service Act [this section] within 90 days after the enactment of this Act [June 19, 1986].''

BAN ON LEAD WATER PIPES, SOLDER, AND FLUX IN VA AND HUD INSURED OR ASSISTED PROPERTY

Section 109(c) of Pub. L. 99–339, as amended by Pub. L. 102–54, § 13(q)(2), June 13, 1991, 105 Stat. 279, provided that:

''(1) PROHIBITION.—The Secretary of Housing and Urban Development and the Secretary of Veterans Affairs may not insure or guarantee a mortgage or furnish assistance with respect to newly constructed residential property which contains a potable water system unless such system uses only lead free pipe, solder, and flux.

''(2) DEFINITION OF LEAD FREE.—For purposes of paragraph (1) the term 'lead free'—

''(A) when used with respect to solders and flux refers to solders and flux containing not more than 0.2 percent lead, and

''(B) when used with respect to pipes and pipe fittings refers to pipes and pipe fittings containing not more than 8.0 percent lead.

''(3) EFFECTIVE DATE.—Paragraph (1) shall become effective 24 months after the enactment of this Act [June 19, 1986].''

§ 300g–7. Monitoring of contaminants

(a) Interim monitoring relief authority

(1) In general

A State exercising primary enforcement responsibility for public water systems may modify the monitoring requirements for any regulated or unregulated contaminants for which monitoring is required other than mi-

crobial contaminants (or indicators thereof), disinfectants and disinfection byproducts or corrosion byproducts for an interim period to provide that any public water system serving 10,000 persons or fewer shall not be required to conduct additional quarterly monitoring during an interim relief period for such contaminants if—

(A) monitoring, conducted at the beginning of the period for the contaminant concerned and certified to the State by the public water system, fails to detect the presence of the contaminant in the ground or surface water supplying the public water system; and

(B) the State, considering the hydrogeology of the area and other relevant factors, determines in writing that the contaminant is unlikely to be detected by further monitoring during such period.

(2) Termination; timing of monitoring

The interim relief period referred to in paragraph (1) shall terminate when permanent monitoring relief is adopted and approved for such State, or at the end of 36 months after August 6, 1996, whichever comes first. In order to serve as a basis for interim relief, the monitoring conducted at the beginning of the period must occur at the time determined by the State to be the time of the public water system's greatest vulnerability to the contaminant concerned in the relevant ground or surface water, taking into account in the case of pesticides the time of application of the pesticide for the source water area and the travel time for the pesticide to reach such waters and taking into account, in the case of other contaminants, seasonality of precipitation and contaminant travel time.

(b) Permanent monitoring relief authority

(1) In general

Each State exercising primary enforcement responsibility for public water systems under this subchapter and having an approved source water assessment program may adopt, in accordance with guidance published by the Administrator, tailored alternative monitoring requirements for public water systems in such State (as an alternative to the monitoring requirements for chemical contaminants set forth in the applicable national primary drinking water regulations) where the State concludes that (based on data available at the time of adoption concerning susceptibility, use, occurrence, or wellhead protection, or from the State's drinking water source water assessment program) such alternative monitoring would provide assurance that it complies with the Administrator's guidelines. The State program must be adequate to assure compliance with, and enforcement of, applicable national primary drinking water regulations. Alternative monitoring shall not apply to regulated microbiological contaminants (or indicators thereof), disinfectants and disinfection byproducts, or corrosion byproducts. The preceding sentence is not intended to limit other authority of the Administrator under other provisions of this subchapter to grant monitoring flexibility.

(2) Guidelines

(A) In general

The Administrator shall issue, after notice and comment and at the same time as guidelines are issued for source water assessment under section 300j–13 of this title, guidelines for States to follow in proposing alternative monitoring requirements under paragraph (1) for chemical contaminants. The Administrator shall publish such guidelines in the Federal Register. The guidelines shall assure that the public health will be protected from drinking water contamination. The guidelines shall require that a State alternative monitoring program apply on a contaminant-by-contaminant basis and that, to be eligible for such alternative monitoring program, a public water system must show the State that the contaminant is not present in the drinking water supply or, if present, it is reliably and consistently below the maximum contaminant level.

(B) Definition

For purposes of subparagraph (A), the phrase "reliably and consistently below the maximum contaminant level" means that, although contaminants have been detected in a water supply, the State has sufficient knowledge of the contamination source and extent of contamination to predict that the maximum contaminant level will not be exceeded. In determining that a contaminant is reliably and consistently below the maximum contaminant level, States shall consider the quality and completeness of data, the length of time covered and the volatility or stability of monitoring results during that time, and the proximity of such results to the maximum contaminant level. Wide variations in the analytical results, or analytical results close to the maximum contaminant level, shall not be considered to be reliably and consistently below the maximum contaminant level.

(3) Effect of detection of contaminants

The guidelines issued by the Administrator under paragraph (2) shall require that if, after the monitoring program is in effect and operating, a contaminant covered by the alternative monitoring program is detected at levels at or above the maximum contaminant level or is no longer reliably or consistently below the maximum contaminant level, the public water system must either—

(A) demonstrate that the contamination source has been removed or that other action has been taken to eliminate the contamination problem; or

(B) test for the detected contaminant pursuant to the applicable national primary drinking water regulation.

(4) States not exercising primary enforcement responsibility

The Governor of any State not exercising primary enforcement responsibility under section 300g–2 of this title on August 6, 1996, may submit to the Administrator a request that the Administrator modify the monitoring re-

quirements established by the Administrator and applicable to public water systems in that State. After consultation with the Governor, the Administrator shall modify the requirements for public water systems in that State if the request of the Governor is in accordance with each of the requirements of this subsection that apply to alternative monitoring requirements established by States that have primary enforcement responsibility. A decision by the Administrator to approve a request under this clause shall be for a period of 3 years and may subsequently be extended for periods of 5 years.

(c) Treatment as NPDWR

All monitoring relief granted by a State to a public water system for a regulated contaminant under subsection (a) or (b) of this section shall be treated as part of the national primary drinking water regulation for that contaminant.

(d) Other monitoring relief

Nothing in this section shall be construed to affect the authority of the States under applicable national primary drinking water regulations to alter monitoring requirements through waivers or other existing authorities. The Administrator shall periodically review and, as appropriate, revise such authorities.

(July 1, 1944, ch. 373, title XIV, § 1418, as added Pub. L. 104–182, title I, § 125(b), Aug. 6, 1996, 110 Stat. 1654.)

§ 300g–8. Operator certification

(a) Guidelines

Not later than 30 months after August 6, 1996, and in cooperation with the States, the Administrator shall publish guidelines in the Federal Register, after notice and opportunity for comment from interested persons, including States and public water systems, specifying minimum standards for certification (and recertification) of the operators of community and nontransient noncommunity public water systems. Such guidelines shall take into account existing State programs, the complexity of the system, and other factors aimed at providing an effective program at reasonable cost to States and public water systems, taking into account the size of the system.

(b) State programs

Beginning 2 years after the date on which the Administrator publishes guidelines under subsection (a) of this section, the Administrator shall withhold 20 percent of the funds a State is otherwise entitled to receive under section 300j–12 of this title unless the State has adopted and is implementing a program for the certification of operators of community and nontransient noncommunity public water systems that meets the requirements of the guidelines published pursuant to subsection (a) of this section or that has been submitted in compliance with subsection (c) of this section and that has not been disapproved.

(c) Existing programs

For any State exercising primary enforcement responsibility for public water systems or any other State which has an operator certification program, the guidelines under subsection (a) of this section shall allow the State to enforce such program in lieu of the guidelines under subsection (a) of this section if the State submits the program to the Administrator within 18 months after the publication of the guidelines unless the Administrator determines (within 9 months after the State submits the program to the Administrator) that such program is not substantially equivalent to such guidelines. In making this determination, an existing State program shall be presumed to be substantially equivalent to the guidelines, notwithstanding program differences, based on the size of systems or the quality of source water, providing the State program meets the overall public health objectives of the guidelines. If disapproved, the program may be resubmitted within 6 months after receipt of notice of disapproval.

(d) Expense reimbursement

(1) In general

The Administrator shall provide reimbursement for the costs of training, including an appropriate per diem for unsalaried operators, and certification for persons operating systems serving 3,300 persons or fewer that are required to undergo training pursuant to this section.

(2) State grants

The reimbursement shall be provided through grants to States with each State receiving an amount sufficient to cover the reasonable costs for training all such operators in the State, as determined by the Administrator, to the extent required by this section. Grants received by a State pursuant to this paragraph shall first be used to provide reimbursement for training and certification costs of persons operating systems serving 3,300 persons or fewer. If a State has reimbursed all such costs, the State may, after notice to the Administrator, use any remaining funds from the grant for any of the other purposes authorized for grants under section 300j–12 of this title.

(3) Authorization

There are authorized to be appropriated to the Administrator to provide grants for reimbursement under this section $30,000,000 for each of fiscal years 1997 through 2003.

(4) Reservation

If the appropriation made pursuant to paragraph (3) for any fiscal year is not sufficient to satisfy the requirements of paragraph (1), the Administrator shall, prior to any other allocation or reservation, reserve such sums as necessary from the funds appropriated pursuant to section 300j–12(m) of this title to provide reimbursement for the training and certification costs mandated by this subsection.

(July 1, 1944, ch. 373, title XIV, § 1419, as added Pub. L. 104–182, title I, § 123, Aug. 6, 1996, 110 Stat. 1652.)

§ 300g–9. Capacity development

(a) State authority for new systems

A State shall receive only 80 percent of the allotment that the State is otherwise entitled to receive under section 300j–12 of this title (relating to State loan funds) unless the State has obtained the legal authority or other means to ensure that all new community water systems and new nontransient, noncommunity water systems commencing operation after October 1, 1999, demonstrate technical, managerial, and financial capacity with respect to each national primary drinking water regulation in effect, or likely to be in effect, on the date of commencement of operations.

(b) Systems in significant noncompliance

(1) List

Beginning not later than 1 year after August 6, 1996, each State shall prepare, periodically update, and submit to the Administrator a list of community water systems and nontransient, noncommunity water systems that have a history of significant noncompliance with this subchapter (as defined in guidelines issued prior to August 6, 1996, or any revisions of the guidelines that have been made in consultation with the States) and, to the extent practicable, the reasons for noncompliance.

(2) Report

Not later than 5 years after August 6, 1996, and as part of the capacity development strategy of the State, each State shall report to the Administrator on the success of enforcement mechanisms and initial capacity development efforts in assisting the public water systems listed under paragraph (1) to improve technical, managerial, and financial capacity.

(3) Withholding

The list and report under this subsection shall be considered part of the capacity development strategy of the State required under subsection (c) of this section for purposes of the withholding requirements of section 300j–12(a)(1)(G)(i) of this title (relating to State loan funds).

(c) Capacity development strategy

(1) In general

Beginning 4 years after August 6, 1996, a State shall receive only—

(A) 90 percent in fiscal year 2001;

(B) 85 percent in fiscal year 2002; and

(C) 80 percent in each subsequent fiscal year,

of the allotment that the State is otherwise entitled to receive under section 300j–12 of this title (relating to State loan funds), unless the State is developing and implementing a strategy to assist public water systems in acquiring and maintaining technical, managerial, and financial capacity.

(2) Content

In preparing the capacity development strategy, the State shall consider, solicit public comment on, and include as appropriate—

(A) the methods or criteria that the State will use to identify and prioritize the public water systems most in need of improving technical, managerial, and financial capacity;

(B) a description of the institutional, regulatory, financial, tax, or legal factors at the Federal, State, or local level that encourage or impair capacity development;

(C) a description of how the State will use the authorities and resources of this subchapter or other means to—

(i) assist public water systems in complying with national primary drinking water regulations;

(ii) encourage the development of partnerships between public water systems to enhance the technical, managerial, and financial capacity of the systems; and

(iii) assist public water systems in the training and certification of operators;

(D) a description of how the State will establish a baseline and measure improvements in capacity with respect to national primary drinking water regulations and State drinking water law; and

(E) an identification of the persons that have an interest in and are involved in the development and implementation of the capacity development strategy (including all appropriate agencies of Federal, State, and local governments, private and nonprofit public water systems, and public water system customers).

(3) Report

Not later than 2 years after the date on which a State first adopts a capacity development strategy under this subsection, and every 3 years thereafter, the head of the State agency that has primary responsibility to carry out this subchapter in the State shall submit to the Governor a report that shall also be available to the public on the efficacy of the strategy and progress made toward improving the technical, managerial, and financial capacity of public water systems in the State.

(4) Review

The decisions of the State under this section regarding any particular public water system are not subject to review by the Administrator and may not serve as the basis for withholding funds under section 300j–12 of this title.

(d) Federal assistance

(1) In general

The Administrator shall support the States in developing capacity development strategies.

(2) Informational assistance

(A) In general

Not later than 180 days after August 6, 1996, the Administrator shall—

(i) conduct a review of State capacity development efforts in existence on August 6, 1996, and publish information to assist States and public water systems in capacity development efforts; and

(ii) initiate a partnership with States, public water systems, and the public to de-

velop information for States on recommended operator certification requirements.

(B) Publication of information

The Administrator shall publish the information developed through the partnership under subparagraph (A)(ii) not later than 18 months after August 6, 1996.

(3) Promulgation of drinking water regulations

In promulgating a national primary drinking water regulation, the Administrator shall include an analysis of the likely effect of compliance with the regulation on the technical, financial, and managerial capacity of public water systems.

(4) Guidance for new systems

Not later than 2 years after August 6, 1996, the Administrator shall publish guidance developed in consultation with the States describing legal authorities and other means to ensure that all new community water systems and new nontransient, noncommunity water systems demonstrate technical, managerial, and financial capacity with respect to national primary drinking water regulations.

(e) Variances and exemptions

Based on information obtained under subsection (c)(3) of this section, the Administrator shall, as appropriate, modify regulations concerning variances and exemptions for small public water systems to ensure flexibility in the use of the variances and exemptions. Nothing in this subsection shall be interpreted, construed, or applied to affect or alter the requirements of section 300g–4 or 300g–5 of this title.

(f) Small public water systems technology assistance centers

(1) Grant program

The Administrator is authorized to make grants to institutions of higher learning to establish and operate small public water system technology assistance centers in the United States.

(2) Responsibilities of the centers

The responsibilities of the small public water system technology assistance centers established under this subsection shall include the conduct of training and technical assistance relating to the information, performance, and technical needs of small public water systems or public water systems that serve Indian Tribes.

(3) Applications

Any institution of higher learning interested in receiving a grant under this subsection shall submit to the Administrator an application in such form and containing such information as the Administrator may require by regulation.

(4) Selection criteria

The Administrator shall select recipients of grants under this subsection on the basis of the following criteria:

(A) The small public water system technology assistance center shall be located in a State that is representative of the needs of the region in which the State is located for addressing the drinking water needs of small and rural communities or Indian Tribes.

(B) The grant recipient shall be located in a region that has experienced problems, or may reasonably be foreseen to experience problems, with small and rural public water systems.

(C) The grant recipient shall have access to expertise in small public water system technology management.

(D) The grant recipient shall have the capability to disseminate the results of small public water system technology and training programs.

(E) The projects that the grant recipient proposes to carry out under the grant are necessary and appropriate.

(F) The grant recipient has regional support beyond the host institution.

(5) Consortia of States

At least 2 of the grants under this subsection shall be made to consortia of States with low population densities.

(6) Authorization of appropriations

There are authorized to be appropriated to make grants under this subsection $2,000,000 for each of the fiscal years 1997 through 1999, and $5,000,000 for each of the fiscal years 2000 through 2003.

(g) Environmental finance centers

(1) In general

The Administrator shall provide initial funding for one or more university-based environmental finance centers for activities that provide technical assistance to State and local officials in developing the capacity of public water systems. Any such funds shall be used only for activities that are directly related to this subchapter.

(2) National capacity development clearinghouse

The Administrator shall establish a national public water system capacity development clearinghouse to receive and disseminate information with respect to developing, improving, and maintaining financial and managerial capacity at public water systems. The Administrator shall ensure that the clearinghouse does not duplicate other federally supported clearinghouse activities.

(3) Capacity development techniques

The Administrator may request an environmental finance center funded under paragraph (1) to develop and test managerial, financial, and institutional techniques for capacity development. The techniques may include capacity assessment methodologies, manual and computer based public water system rate models and capital planning models, public water system consolidation procedures, and regionalization models.

(4) Authorization of appropriations

There are authorized to be appropriated to carry out this subsection $1,500,000 for each of the fiscal years 1997 through 2003.

(5) Limitation

No portion of any funds made available under this subsection may be used for lobbying expenses.

(July 1, 1944, ch. 373, title XIV, § 1420, as added Pub. L. 104–182, title I, § 119, Aug. 6, 1996, 110 Stat. 1647.)

PART C—PROTECTION OF UNDERGROUND SOURCES OF DRINKING WATER

§ 300h. Regulations for State programs

(a) Publication of proposed regulations; promulgation; amendments; public hearings; administrative consultations

(1) The Administrator shall publish proposed regulations for State underground injection control programs within 180 days after December 16, 1974. Within 180 days after publication of such proposed regulations, he shall promulgate such regulations with such modifications as he deems appropriate. Any regulation under this subsection may be amended from time to time.

(2) Any regulation under this section shall be proposed and promulgated in accordance with section 553 of title 5 (relating to rulemaking), except that the Administrator shall provide opportunity for public hearing prior to promulgation of such regulations. In proposing and promulgating regulations under this section the Administrator shall consult with the Secretary, the National Drinking Water Advisory Council, and other appropriate Federal entities and with interested State entities.

(b) Minimum requirements; restrictions

(1) Regulations under subsection (a) of this section for State underground injection programs shall contain minimum requirements for effective programs to prevent underground injection which endangers drinking water sources within the meaning of subsection (d)(2) of this section. Such regulations shall require that a State program, in order to be approved under section 300h–1 of this title—

(A) shall prohibit, effective on the date on which the applicable underground injection control program takes effect, any underground injection in such State which is not authorized by a permit issued by the State (except that the regulations may permit a State to authorize underground injection by rule);

(B) shall require (i) in the case of a program which provides for authorization of underground injection by permit, that the applicant for the permit to inject must satisfy the State that the underground injection will not endanger drinking water sources, and (ii) in the case of a program which provides for such an authorization by rule, that no rule may be promulgated which authorizes any underground injection which endangers drinking water sources;

(C) shall include inspection, monitoring, recordkeeping, and reporting requirements; and

(D) shall apply (i) as prescribed by section 300j–6(b)[1] of this title, to underground injections by Federal agencies, and (ii) to underground injections by any other person whether or not occurring on property owned or leased by the United States.

(2) Regulations of the Administrator under this section for State underground injection control programs may not prescribe requirements which interfere with or impede—

(A) the underground injection of brine or other fluids which are brought to the surface in connection with oil or natural gas production or natural gas storage operations, or

(B) any underground injection for the secondary or tertiary recovery of oil or natural gas,

unless such requirements are essential to assure that underground sources of drinking water will not be endangered by such injection.

(3)(A) The regulations of the Administrator under this section shall permit or provide for consideration of varying geologic, hydrological, or historical conditions in different States and in different areas within a State.

(B)(i) In prescribing regulations under this section the Administrator shall, to the extent feasible, avoid promulgation of requirements which would unnecessarily disrupt State underground injection control programs which are in effect and being enforced in a substantial number of States.

(ii) For the purpose of this subparagraph, a regulation prescribed by the Administrator under this section shall be deemed to disrupt a State underground injection control program only if it would be infeasible to comply with both such regulation and the State underground injection control program.

(iii) For the purpose of this subparagraph, a regulation prescribed by the Administrator under this section shall be deemed unnecessary only if, without such regulation, underground sources of drinking water will not be endangered by an underground injection.

(C) Nothing in this section shall be construed to alter or affect the duty to assure that underground sources of drinking water will not be endangered by any underground injection.

(c) Temporary permits; notice and hearing

(1) The Administrator may, upon application of the Governor of a State which authorizes underground injection by means of permits, authorize such State to issue (without regard to subsection (b)(1)(B)(i) of this section) temporary permits for underground injection which may be effective until the, expiration of four years after December 16, 1974, if—

(A) the Administrator finds that the State has demonstrated that it is unable and could not reasonably have been able to process all permit applications within the time available;

(B) the Administrator determines the adverse effect on the environment of such temporary permits is not unwarranted;

(C) such temporary permits will be issued only with respect to injection wells in operation on the date on which such State's permit program approved under this part first takes effect and for which there was inadequate time to process its permit application; and

(D) the Administrator determines the temporary permits require the use of adequate

[1] See References in Text note below.

safeguards established by rules adopted by him.

(2) The Administrator may, upon application of the Governor of a State which authorizes underground injection by means of permits, authorize such State to issue (without regard to subsection (b)(1)(B)(i) of this section), but after reasonable notice and hearing, one or more temporary permits each of which is applicable to a particular injection well and to the underground injection of a particular fluid and which may be effective until the expiration of four years after December 16, 1974, if the State finds, on the record of such hearing—

(A) that technology (or other means) to permit safe injection of the fluid in accordance with the applicable underground injection control program is not generally available (taking costs into consideration);

(B) that injection of the fluid would be less harmful to health than the use of other available means of disposing of waste or producing the desired product; and

(C) that available technology or other means have been employed (and will be employed) to reduce the volume and toxicity of the fluid and to minimize the potentially adverse effect of the injection on the public health.

(d) "Underground injection" defined; underground injection endangerment of drinking water sources

For purposes of this part:

(1) UNDERGROUND INJECTION.—The term "underground injection"—

(A) means the subsurface emplacement of fluids by well injection; and

(B) excludes—

(i) the underground injection of natural gas for purposes of storage; and

(ii) the underground injection of fluids or propping agents (other than diesel fuels) pursuant to hydraulic fracturing operations related to oil, gas, or geothermal production activities.

(2) Underground injection endangers drinking water sources if such injection may result in the presence in underground water which supplies or can reasonably be expected to supply any public water system of any contaminant, and if the presence of such contaminant may result in such system's not complying with any national primary drinking water regulation or may otherwise adversely affect the health of persons.

(July 1, 1944, ch. 373, title XIV, §1421, as added Pub. L. 93–523, §2(a), Dec. 16, 1974, 88 Stat. 1674; amended Pub. L. 95–190, §6(b), Nov. 16, 1977, 91 Stat. 1396; Pub. L. 96–502, §§3, 4(c), Dec. 5, 1980, 94 Stat. 2738; Pub. L. 99–339, title II, §201(a), June 19, 1986, 100 Stat. 653; Pub. L. 104–182, title V, §501(b)(1), Aug. 6, 1996, 110 Stat. 1691; Pub. L. 109–58, title III, §322, Aug. 8, 2005, 119 Stat. 694.)

REFERENCES IN TEXT

Section 300j–6(b) of this title, referred to in subsec. (b)(1)(D), was repealed, and a new section 300j–6(b) relating to administrative penalty orders was added, by Pub. L. 104–182, title I, §129(a), Aug. 6, 1996, 110 Stat. 1660.

AMENDMENTS

2005—Subsec. (d)(1). Pub. L. 109–58 inserted heading and amended text of par. (1) generally. Prior to amendment, par. (1) read as follows: "The term 'underground injection' means the subsurface emplacement of fluids by well injection. Such term does not include the underground injection of natural gas for purposes of storage."

1996—Subsec. (b)(3)(B)(i). Pub. L. 104–182 substituted "number of States" for "number or States".

1986—Subsec. (b)(2)(A). Pub. L. 99–339 inserted "or natural gas storage operations" after "production".

1980—Subsec. (b)(1)(A). Pub. L. 96–502, §4(c), substituted "effective on the date on which the applicable underground injection control program takes effect" for "effective three years after December 16, 1974".

Subsec. (d)(1). Pub. L. 96–502, §3, inserted provision that such term does not include the underground injection of natural gas for purposes of storage.

1977—Subsec. (b)(3). Pub. L. 95–190 added par. (3).

§ 300h–1. State primary enforcement responsibility

(a) List of States in need of a control program; amendment of list

Within 180 days after December 16, 1974, the Administrator shall list in the Federal Register each State for which in his judgment a State underground injection control program may be necessary to assure that underground injection will not endanger drinking water sources. Such list may be amended from time to time.

(b) State applications; notice to Administrator of compliance with revised or added requirements; approval or disapproval by Administrator; duration of State primary enforcement responsibility; public hearing

(1)(A) Each State listed under subsection (a) of this section shall within 270 days after the date of promulgation of any regulation under section 300h of this title (or, if later, within 270 days after such State is first listed under subsection (a) of this section) submit to the Administrator an application which contains a showing satisfactory to the Administrator that the State—

(i) has adopted after reasonable notice and public hearings, and will implement, an underground injection control program which meets the requirements of regulations in effect under section 300h of this title; and

(ii) will keep such records and make such reports with respect to its activities under its underground injection control program as the Administrator may require by regulation.

The Administrator may, for good cause, extend the date for submission of an application by any State under this subparagraph for a period not to exceed an additional 270 days.

(B) Within 270 days of any amendment of a regulation under section 300h of this title revising or adding any requirement respecting State underground injection control programs, each State listed under subsection (a) of this section shall submit (in such form and manner as the Administrator may require) a notice to the Administrator containing a showing satisfactory to him that the State underground injection control program meets the revised or added requirement.

(2) Within ninety days after the State's application under paragraph (1)(A) or notice under

paragraph (1)(B) and after reasonable opportunity for presentation of views, the Administrator shall by rule either approve, disapprove, or approve in part and disapprove in part, the State's underground injection control program.

(3) If the Administrator approves the State's program under paragraph (2), the State shall have primary enforcement responsibility for underground water sources until such time as the Administrator determines, by rule, that such State no longer meets the requirements of clause (i) or (ii) of paragraph (1)(A) of this subsection.

(4) Before promulgating any rule under paragraph (2) or (3) of this subsection, the Administrator shall provide opportunity for public hearing respecting such rule.

(c) Program by Administrator for State without primary enforcement responsibility; restrictions

If the Administrator disapproves a State's program (or part thereof) under subsection (b)(2) of this section, if the Administrator determines under subsection (b)(3) of this section that a State no longer meets the requirements of clause (i) or (ii) of subsection (b)(1)(A) of this section, or if a State fails to submit an application or notice before the date of expiration of the period specified in subsection (b)(1) of this section, the Administrator shall by regulation within 90 days after the date of such disapproval, determination, or expiration (as the case may be) prescribe (and may from time to time by regulation revise) a program applicable to such State meeting the requirements of section 300h(b) of this title. Such program may not include requirements which interfere with or impede—

(1) the underground injection of brine or other fluids which are brought to the surface in connection with oil or natural gas production or natural gas storage operations, or

(2) any underground injection for the secondary or tertiary recovery of oil or natural gas,

unless such requirements are essential to assure that underground sources of drinking water will not be endangered by such injection. Such program shall apply in such State to the extent that a program adopted by such State which the Administrator determines meets such requirements is not in effect. Before promulgating any regulation under this section, the Administrator shall provide opportunity for public hearing respecting such regulation.

(d) "Applicable underground injection control program" defined

For purposes of this subchapter, the term "applicable underground injection control program" with respect to a State means the program (or most recent amendment thereof) (1) which has been adopted by the State and which has been approved under subsection (b) of this section, or (2) which has been prescribed by the Administrator under subsection (c) of this section.

(e) Primary enforcement responsibility by Indian Tribe

An Indian Tribe may assume primary enforcement responsibility for underground injection control under this section consistent with such regulations as the Administrator has prescribed pursuant to this part and section 300j–11 of this title. The area over which such Indian Tribe exercises governmental jurisdiction need not have been listed under subsection (a) of this section, and such Tribe need not submit an application to assume primary enforcement responsibility within the 270-day deadline noted in subsection (b)(1)(A) of this section. Until an Indian Tribe assumes primary enforcement responsibility, the currently applicable underground injection control program shall continue to apply. If an applicable underground injection control program does not exist for an Indian Tribe, the Administrator shall prescribe such a program pursuant to subsection (c) of this section, and consistent with section 300h(b) of this title, within 270 days after June 19, 1986, unless an Indian Tribe first obtains approval to assume primary enforcement responsibility for underground injection control.

(July 1, 1944, ch. 373, title XIV, § 1422, as added Pub. L. 93–523, § 2(a), Dec. 16, 1974, 88 Stat. 1676; amended Pub. L. 95–190, § 6(a), Nov. 16, 1977, 91 Stat. 1396; Pub. L. 99–339, title II, § 201(a), title III, § 302(c), June 19, 1986, 100 Stat. 653, 666.)

AMENDMENTS

1986—Subsec. (c)(1). Pub. L. 99–339, § 201(a), inserted "or natural gas storage operations, or" after "production".

Subsec. (e). Pub. L. 99–339, § 302(c), added subsec. (e).

1977—Subsec. (b)(1)(A). Pub. L. 95–190 inserted provisions relating to extension of date for submission of applications by any State.

§ 300h–2. Enforcement of program

(a) Notice to State and violator; issuance of administrative order; civil action

(1) Whenever the Administrator finds during a period during which a State has primary enforcement responsibility for underground water sources (within the meaning of section 300h–1(b)(3) of this title or section 300h–4(c) of this title) that any person who is subject to a requirement of an applicable underground injection control program in such State is violating such requirement, he shall so notify the State and the person violating such requirement. If beyond the thirtieth day after the Administrator's notification the State has not commenced appropriate enforcement action, the Administrator shall issue an order under subsection (c) of this section requiring the person to comply with such requirement or the Administrator shall commence a civil action under subsection (b) of this section.

(2) Whenever the Administrator finds during a period during which a State does not have primary enforcement responsibility for underground water sources that any person subject to any requirement of any applicable underground injection control program in such State is violating such requirement, the Administrator shall issue an order under subsection (c) of this section requiring the person to comply with such requirement or the Administrator shall commence a civil action under subsection (b) of this section.

(b) Civil and criminal actions

Civil actions referred to in paragraphs (1) and (2) of subsection (a) of this section shall be brought in the appropriate United States district court. Such court shall have jurisdiction to require compliance with any requirement of an applicable underground injection program or with an order issued under subsection (c) of this section. The court may enter such judgment as protection of public health may require. Any person who violates any requirement of an applicable underground injection control program or an order requiring compliance under subsection (c) of this section—

(1) shall be subject to a civil penalty of not more than $25,000 for each day of such violation, and

(2) if such violation is willful, such person may, in addition to or in lieu of the civil penalty authorized by paragraph (1), be imprisoned for not more than 3 years, or fined in accordance with title 18, or both.

(c) Administrative orders

(1) In any case in which the Administrator is authorized to bring a civil action under this section with respect to any regulation or other requirement of this part other than those relating to—

(A) the underground injection of brine or other fluids which are brought to the surface in connection with oil or natural gas production, or

(B) any underground injection for the secondary or tertiary recovery of oil or natural gas,

the Administrator may also issue an order under this subsection either assessing a civil penalty of not more than $10,000 for each day of violation for any past or current violation, up to a maximum administrative penalty of $125,000, or requiring compliance with such regulation or other requirement, or both.

(2) In any case in which the Administrator is authorized to bring a civil action under this section with respect to any regulation, or other requirement of this part relating to—

(A) the underground injection of brine or other fluids which are brought to the surface in connection with oil or natural gas production, or

(B) any underground injection for the secondary or tertiary recovery of oil or natural gas,

the Administrator may also issue an order under this subsection either assessing a civil penalty of not more than $5,000 for each day of violation for any past or current violation, up to a maximum administrative penalty of $125,000, or requiring compliance with such regulation or other requirement, or both.

(3)(A) An order under this subsection shall be issued by the Administrator after opportunity (provided in accordance with this subparagraph) for a hearing. Before issuing the order, the Administrator shall give to the person to whom it is directed written notice of the Administrator's proposal to issue such order and the opportunity to request, within 30 days of the date the notice is received by such person, a hearing on the order. Such hearing shall not be subject to section 554 or 556 of title 5, but shall provide a reasonable opportunity to be heard and to present evidence.

(B) The Administrator shall provide public notice of, and reasonable opportunity to comment on, any proposed order.

(C) Any citizen who comments on any proposed order under subparagraph (B) shall be given notice of any hearing under this subsection and of any order. In any hearing held under subparagraph (A), such citizen shall have a reasonable opportunity to be heard and to present evidence.

(D) Any order issued under this subsection shall become effective 30 days following its issuance unless an appeal is taken pursuant to paragraph (6).

(4)(A) Any order issued under this subsection shall state with reasonable specificity the nature of the violation and may specify a reasonable time for compliance.

(B) In assessing any civil penalty under this subsection, the Administrator shall take into account appropriate factors, including (i) the seriousness of the violation; (ii) the economic benefit (if any) resulting from the violation; (iii) any history of such violations; (iv) any good-faith efforts to comply with the applicable requirements; (v) the economic impact of the penalty on the violator; and (vi) such other matters as justice may require.

(5) Any violation with respect to which the Administrator has commenced and is diligently prosecuting an action, or has issued an order under this subsection assessing a penalty, shall not be subject to an action under subsection (b) of this section or section 300h–3(c) or 300j–8 of this title, except that the foregoing limitation on civil actions under section 300j–8 of this title shall not apply with respect to any violation for which—

(A) a civil action under section 300j–8(a)(1) of this title has been filed prior to commencement of an action under this subsection, or

(B) a notice of violation under section 300j–8(b)(1) of this title has been given before commencement of an action under this subsection and an action under section 300j–8(a)(1) of this title is filed before 120 days after such notice is given.

(6) Any person against whom an order is issued or who commented on a proposed order pursuant to paragraph (3) may file an appeal of such order with the United States District Court for the District of Columbia or the district in which the violation is alleged to have occurred. Such an appeal may only be filed within the 30-day period beginning on the date the order is issued. Appellant shall simultaneously send a copy of the appeal by certified mail to the Administrator and to the Attorney General. The Administrator shall promptly file in such court a certified copy of the record on which such order was imposed. The district court shall not set aside or remand such order unless there is not substantial evidence on the record, taken as a whole, to support the finding of a violation or, unless the Administrator's assessment of penalty or requirement for compliance constitutes an abuse of discretion. The district court shall

not impose additional civil penalties for the same violation unless the Administrator's assessment of a penalty constitutes an abuse of discretion. Notwithstanding section 300j–7(a)(2) of this title, any order issued under paragraph (3) shall be subject to judicial review exclusively under this paragraph.

(7) If any person fails to pay an assessment of a civil penalty—

(A) after the order becomes effective under paragraph (3), or

(B) after a court, in an action brought under paragraph (6), has entered a final judgment in favor of the Administrator,

the Administrator may request the Attorney General to bring a civil action in an appropriate district court to recover the amount assessed (plus costs, attorneys' fees, and interest at currently prevailing rates from the date the order is effective or the date of such final judgment, as the case may be). In such an action, the validity, amount, and appropriateness of such penalty shall not be subject to review.

(8) The Administrator may, in connection with administrative proceedings under this subsection, issue subpoenas compelling the attendance and testimony of witnesses and subpoenas duces tecum, and may request the Attorney General to bring an action to enforce any subpoena under this section. The district courts shall have jurisdiction to enforce such subpoenas and impose sanction.

(d) State authority to adopt or enforce laws or regulations respecting underground injection unaffected

Nothing in this subchapter shall diminish any authority of a State or political subdivision to adopt or enforce any law or regulation respecting underground injection but no such law or regulation shall relieve any person of any requirement otherwise applicable under this subchapter.

(July 1, 1944, ch. 373, title XIV, §1423, as added Pub. L. 93–523, §2(a), Dec. 16, 1974, 88 Stat. 1677; amended Pub. L. 96–502, §2(b), Dec. 5, 1980, 94 Stat. 2738; Pub. L. 99–339, title II, §202, June 19, 1986, 100 Stat. 654.)

AMENDMENTS

1986—Pub. L. 99–339, §202(d), substituted "Enforcement" for "Failure of State to assure enforcement" in section catchline.

Subsec. (a)(1). Pub. L. 99–339, §202(a)(1), substituted provisions which related to issuance of an order of compliance or commencement of a civil action by the Administrator if the State has not commenced enforcement against the violator for provisions directing the Administrator to give public notice and request that the State report within 15 days thereafter as to steps taken to enforce compliance and authorizing the Administrator to commence a civil action upon failure by the State to comply timely.

Subsec. (a)(2). Pub. L. 99–339, §202(a)(2), substituted provision that the Administrator issue an order under subsec. (c) of this section or commence a civil action under subsec. (b) of this section for provision that he commence a civil action under subsec. (b)(1) of this section.

Subsec. (b). Pub. L. 99–339, §202(b), amended subsec. (b) generally, substituting provisions relating to jurisdiction of the appropriate Federal district court, entry of judgment, civil penalty of $25,000 per day, criminal liability and fine for willful violation for provisions which related to judicial determinations in appropriate Federal district courts, civil penalties of $5,000 per day, and fines of $10,000 per day for willful violations.

Subsecs. (c), (d). Pub. L. 99–339, §202(c), added subsec. (c) and redesignated former subsec. (c) as (d).

1980—Subsec. (a)(1). Pub. L. 96–502 inserted reference to section 300h–4(c) of this title.

§ 300h–3. Interim regulation of underground injections

(a) Necessity for well operation permit; designation of one aquifer areas

(1) Any person may petition the Administrator to have an area of a State (or States) designated as an area in which no new underground injection well may be operated during the period beginning on the date of the designation and ending on the date on which the applicable underground injection control program covering such area takes effect unless a permit for the operation of such well has been issued by the Administrator under subsection (b) of this section. The Administrator may so designate an area within a State if he finds that the area has one aquifer which is the sole or principal drinking water source for the area and which, if contaminated, would create a significant hazard to public health.

(2) Upon receipt of a petition under paragraph (1) of this subsection, the Administrator shall publish it in the Federal Register and shall provide an opportunity to interested persons to submit written data, views, or arguments thereon. Not later than the 30th day following the date of the publication of a petition under this paragraph in the Federal Register, the Administrator shall either make the designation for which the petition is submitted or deny the petition.

(b) Well operation permits; publication in Federal Register; notice and hearing; issuance or denial; conditions for issuance

(1) During the period beginning on the date an area is designated under subsection (a) of this section and ending on the date the applicable underground injection control program covering such area takes effect, no new underground injection well may be operated in such area unless the Administrator has issued a permit for such operation.

(2) Any person may petition the Administrator for the issuance of a permit for the operation of such a well in such an area. A petition submitted under this paragraph shall be submitted in such manner and contain such information as the Administrator may require by regulation. Upon receipt of such a petition, the Administrator shall publish it in the Federal Register. The Administrator shall give notice of any proceeding on a petition and shall provide opportunity for agency hearing. The Administrator shall act upon such petition on the record of any hearing held pursuant to the preceding sentence respecting such petition. Within 120 days of the publication in the Federal Register of a petition submitted under this paragraph, the Administrator shall either issue the permit for which the petition was submitted or shall deny its issuance.

(3) The Administrator may issue a permit for the operation of a new underground injection

well in an area designated under subsection (a) of this section only, if he finds that the operation of such well will not cause contamination of the aquifer of such area so as to create a significant hazard to public health. The Administrator may condition the issuance of such a permit upon the use of such control measures in connection with the operation of such well, for which the permit is to be issued, as he deems necessary to assure that the operation of the well will not contaminate the aquifer of the designated area in which the well is located so as to create a significant hazard to public health.

(c) Civil penalties; separate violations; penalties for willful violations; temporary restraining order or injunction

Any person who operates a new underground injection well in violation of subsection (b) of this section, (1) shall be subject to a civil penalty of not more than $5,000 for each day in which such violation occurs, or (2) if such violation is willful, such person may, in lieu of the civil penalty authorized by clause (1), be fined not more than $10,000 for each day in which such violation occurs. If the Administrator has reason to believe that any person is violating or will violate subsection (b) of this section, he may petition the United States district court to issue a temporary restraining order or injunction (including a mandatory injunction) to enforce such subsection.

(d) "New underground injection well" defined

For purposes of this section, the term ''new underground injection well'' means an underground injection well whose operation was not approved by appropriate State and Federal agencies before December 16, 1974.

(e) Areas with one aquifer; publication in Federal Register; commitments for Federal financial assistance

If the Administrator determines, on his own initiative or upon petition, that an area has an aquifer which is the sole or principal drinking water source for the area and which, if contaminated, would create a significant hazard to public health, he shall publish notice of that determination in the Federal Register. After the publication of any such notice, no commitment for Federal financial assistance (through a grant, contract, loan guarantee, or otherwise) may be entered into for any project which the Administrator determines may contaminate such aquifer through a recharge zone so as to create a significant hazard to public health, but a commitment for Federal financial assistance may, if authorized under another provision of law, be entered into to plan or design the project to assure that it will not so contaminate the aquifer.

(July 1, 1944, ch. 373, title XIV, § 1424, as added Pub. L. 93–523, § 2(a), Dec. 16, 1974, 88 Stat. 1678.)

§ 300h–4. Optional demonstration by States relating to oil or natural gas

(a) Approval of State underground injection control program; alternative showing of effectiveness of program by State

For purposes of the Administrator's approval or disapproval under section 300h–1 of this title of that portion of any State underground injection control program which relates to—

(1) the underground injection of brine or other fluids which are brought to the surface in connection with oil or natural gas production or natural gas storage operations, or

(2) any underground injection for the secondary or tertiary recovery of oil or natural gas,

in lieu of the showing required under subparagraph (A) of section 300h–1(b)(1) of this title the State may demonstrate that such portion of the State program meets the requirements of subparagraphs (A) through (D) of section 300h(b)(1) of this title and represents an effective program (including adequate recordkeeping and reporting) to prevent underground injection which endangers drinking water sources.

(b) Revision or amendment of requirements of regulation; showing of effectiveness of program by State

If the Administrator revises or amends any requirement of a regulation under section 300h of this title relating to any aspect of the underground injection referred to in subsection (a) of this section, in the case of that portion of a State underground injection control program for which the demonstration referred to in subsection (a) of this section has been made, in lieu of the showing required under section 300h–1(b)(1)(B) of this title the State may demonstrate that, with respect to that aspect of such underground injection, the State program meets the requirements of subparagraphs (A) through (D) of section 300h(b)(1) of this title and represents an effective program (including adequate recordkeeping and reporting) to prevent underground injection which endangers drinking water sources.

(c) Primary enforcement responsibility of State; voiding by Administrator under duly promulgated rule

(1) Section 300h–1(b)(3) of this title shall not apply to that portion of any State underground injection control program approved by the Administrator pursuant to a demonstration under subsection (a) of this section (and under subsection (b) of this section where applicable).

(2) If pursuant to such a demonstration, the Administrator approves such portion of the State program, the State shall have primary enforcement responsibility with respect to that portion until such time as the Administrator determines, by rule, that such demonstration is no longer valid. Following such a determination, the Administrator may exercise the authority of subsection (c) of section 300h–1 of this title in the same manner as provided in such subsection with respect to a determination described in such subsection.

(3) Before promulgating any rule under paragraph (2), the Administrator shall provide opportunity for public hearing respecting such rule.

(July 1, 1944, ch. 373, title XIV, § 1425, as added Pub. L. 96–502, § 2(a), Dec. 5, 1980, 94 Stat. 2737; amended Pub. L. 99–339, title II, § 201(a), June 19, 1986, 100 Stat. 653.)

AMENDMENTS

1986—Subsec. (a)(1). Pub. L. 99–339 inserted ''or natural gas storage operations, or'' after ''production''.

§ 300h–5. Regulation of State programs

Not later than 18 months after June 19, 1986, the Administrator shall modify regulations issued under this chapter for Class I injection wells to identify monitoring methods, in addition to those in effect on November 1, 1985, including groundwater monitoring. In accordance with such regulations, the Administrator, or delegated State authority, shall determine the applicability of such monitoring methods, wherever appropriate, at locations and in such a manner as to provide the earliest possible detection of fluid migration into, or in the direction of, underground sources of drinking water from such wells, based on its assessment of the potential for fluid migration from the injection zone that may be harmful to human health or the environment. For purposes of this subsection, a class I injection well is defined in accordance with 40 CFR 146.05 as in effect on November 1, 1985.

(July 1, 1944, ch. 373, title XIV, § 1426, as added Pub. L. 99–339, title II, § 201(b), June 19, 1986, 100 Stat. 653; amended Pub. L. 104–66, title II, § 2021(f), Dec. 21, 1995, 109 Stat. 727; Pub. L. 104–182, title V, § 501(f)(2), Aug. 6, 1996, 110 Stat. 1691.)

AMENDMENTS

1996—Pub. L. 104–182 directed technical amendment of section catchline and subsec. (a) designation. The provision directing amendment of subsec. (a) designation could not be executed because section does not contain a subsec. (a).

1995—Pub. L. 104–66 struck out subsec. (a) designation and heading before "Not later than" and struck out heading and text of subsec. (b). Text read as follows: "The Administrator shall submit a report to Congress, no later than September 1987, summarizing the results of State surveys required by the Administrator under this section. The report shall include each of the following items of information:

"(1) The numbers and categories of class V wells which discharge nonhazardous waste into or above an underground source of drinking water.

"(2) The primary contamination problems associated with different categories of these disposal wells.

"(3) Recommendations for minimum design, construction, installation, and siting requirements that should be applied to protect underground sources of drinking water from such contamination wherever necessary."

§ 300h–6. Sole source aquifer demonstration program

(a) Purpose

The purpose of this section is to establish procedures for development, implementation, and assessment of demonstration programs designed to protect critical aquifer protection areas located within areas designated as sole or principal source aquifers under section 300h–3(e) of this title.

(b) "Critical aquifer protection area" defined

For purposes of this section, the term "critical aquifer protection area" means either of the following:

(1) All or part of an area located within an area for which an application or designation as a sole or principal source aquifer pursuant to section 300h–3(e) of this title, has been submitted and approved by the Administrator and which satisfies the criteria established by the Administrator under subsection (d) of this section.

(2) All or part of an area which is within an aquifer designated as a sole source aquifer as of June 19, 1986, and for which an areawide ground water quality protection plan has been approved under section 208 of the Clean Water Act [33 U.S.C. 1288] prior to June 19, 1986.

(c) Application

Any State, municipal or local government or political subdivision thereof or any planning entity (including any interstate regional planning entity) that identifies a critical aquifer protection area over which it has authority or jurisdiction may apply to the Administrator for the selection of such area for a demonstration program under this section. Any applicant shall consult with other government or planning entities with authority or jurisdiction in such area prior to application. Applicants, other than the Governor, shall submit the application for a demonstration program jointly with the Governor.

(d) Criteria

Not later than 1 year after June 19, 1986, the Administrator shall, by rule, establish criteria for identifying critical aquifer protection areas under this section. In establishing such criteria, the Administrator shall consider each of the following:

(1) The vulnerability of the aquifer to contamination due to hydrogeologic characteristics.

(2) The number of persons or the proportion of population using the ground water as a drinking water source.

(3) The economic, social and environmental benefits that would result to the area from maintenance of ground water of high quality.

(4) The economic, social and environmental costs that would result from degradation of the quality of the ground water.

(e) Contents of application

An application submitted to the Administrator by any applicant for a demonstration program under this section shall meet each of the following requirements:

(1) The application shall propose boundaries for the critical aquifer protection area within its jurisdiction.

(2) The application shall designate or, if necessary, establish a planning entity (which shall be a public agency and which shall include representation of elected local and State governmental officials) to develop a comprehensive management plan (hereinafter in this section referred to as the "plan") for the critical protection area. Where a local government planning agency exists with adequate authority to carry out this section with respect to any proposed critical protection area, such agency shall be designated as the planning entity.

(3) The application shall establish procedures for public participation in the development of the plan, for review, approval, and adoption of the plan, and for assistance to mu-

nicipalities and other public agencies with authority under State law to implement the plan.

(4) The application shall include a hydrogeologic assessment of surface and ground water resources within the critical protection area.

(5) The application shall include a comprehensive management plan for the proposed protection area.

(6) The application shall include the measures and schedule proposed for implementation of such plan.

(f) Comprehensive plan

(1) The objective of a comprehensive management plan submitted by an applicant under this section shall be to maintain the quality of the ground water in the critical protection area in a manner reasonably expected to protect human health, the environment and ground water resources. In order to achieve such objective, the plan may be designed to maintain, to the maximum extent possible, the natural vegetative and hydrogeological conditions. Each of the following elements shall be included in such a protection plan:

(A) A map showing the detailed boundary of the critical protection area.

(B) An identification of existing and potential point and nonpoint sources of ground water degradation.

(C) An assessment of the relationship between activities on the land surface and ground water quality.

(D) Specific actions and management practices to be implemented in the critical protection area to prevent adverse impacts on ground water quality.

(E) Identification of authority adequate to implement the plan, estimates of program costs, and sources of State matching funds.

(2) Such plan may also include the following:

(A) A determination of the quality of the existing ground water recharged through the special protection area and the natural recharge capabilities of the special protection area watershed.

(B) Requirements designed to maintain existing underground drinking water quality or improve underground drinking water quality if prevailing conditions fail to meet drinking water standards, pursuant to this chapter and State law.

(C) Limits on Federal, State, and local government, financially assisted activities and projects which may contribute to degradation of such ground water or any loss of natural surface and subsurface infiltration of purification capability of the special protection watershed.

(D) A comprehensive statement of land use management including emergency contingency planning as it pertains to the maintenance of the quality of underground sources of drinking water or to the improvement of such sources if necessary to meet drinking water standards pursuant to this chapter and State law.

(E) Actions in the special protection area which would avoid adverse impacts on water quality, recharge capabilities, or both.

(F) Consideration of specific techniques, which may include clustering, transfer of development rights, and other innovative measures sufficient to achieve the objectives of this section.

(G) Consideration of the establishment of a State institution to facilitate and assist funding a development transfer credit system.

(H) A program for State and local implementation of the plan described in this subsection in a manner that will insure the continued, uniform, consistent protection of the critical protection area in accord with the purposes of this section.

(I) Pollution abatement measures, if appropriate.

(g) Plans under section 208 of Clean Water Act

A plan approved before June 19, 1986, under section 208 of the Clean Water Act [33 U.S.C. 1288] to protect a sole source aquifer designated under section 300h–3(e) of this title shall be considered a comprehensive management plan for the purposes of this section.

(h) Consultation and hearings

During the development of a comprehensive management plan under this section, the planning entity shall consult with, and consider the comments of, appropriate officials of any municipality and State or Federal agency which has jurisdiction over lands and waters within the special protection area, other concerned organizations and technical and citizen advisory committees. The planning entity shall conduct public hearings at places within the special protection area for the purpose of providing the opportunity to comment on any aspect of the plan.

(i) Approval or disapproval

Within 120 days after receipt of an application under this section, the Administrator shall approve or disapprove the application. The approval or disapproval shall be based on a determination that the critical protection area satisfies the criteria established under subsection (d) of this section and that a demonstration program for the area would provide protection for ground water quality consistent with the objectives stated in subsection (f) of this section. The Administrator shall provide to the Governor a written explanation of the reasons for the disapproval of any such application. Any petitioner may modify and resubmit any application which is not approved. Upon approval of an application, the Administrator may enter into a cooperative agreement with the applicant to establish a demonstration program under this section.

(j) Grants and reimbursement

Upon entering a cooperative agreement under subsection (i) of this section, the Administrator may provide to the applicant, on a matching basis, a grant of 50 per centum of the costs of implementing the plan established under this section. The Administrator may also reimburse the applicant of an approved plan up to 50 per centum of the costs of developing such plan, except for plans approved under section 208 of the Clean Water Act [33 U.S.C. 1288]. The total amount of grants under this section for any one

aquifer, designated under section 300h–3(e) of this title, shall not exceed $4,000,000 in any one fiscal year.

(k) Activities funded under other law

No funds authorized under this section may be used to fund activities funded under other sections of this chapter or the Clean Water Act [33 U.S.C. 1251 et seq.], the Solid Waste Disposal Act [42 U.S.C. 6901 et seq.], the Comprehensive Environmental Response, Compensation, and Liability Act of 1980 [42 U.S.C. 9601 et seq.] or other environmental laws.

(*l*) Savings provision

Nothing under this section shall be construed to amend, supersede or abrogate rights to quantities of water which have been established by interstate water compacts, Supreme Court decrees, or State water laws; or any requirement imposed or right provided under any Federal or State environmental or public health statute.

(m) Authorization of appropriations

There are authorized to be appropriated to carry out this section not more than the following amounts:

Fiscal year:	*Amount*
1987	$10,000,000
1988	15,000,000
1989	17,500,000
1990	17,500,000
1991	17,500,000
1992–2003	15,000,000.

Matching grants under this section may also be used to implement or update any water quality management plan for a sole or principal source aquifer approved (before June 19, 1986) by the Administrator under section 208 of the Federal Water Pollution Control Act [33 U.S.C. 1288].

(July 1, 1944, ch. 373, title XIV, §1427, as added and amended Pub. L. 99–339, title II, §203, title III, §301(f), June 19, 1986, 100 Stat. 657, 664; Pub. L. 104–66, title II, §2021(g), Dec. 21, 1995, 109 Stat. 727; Pub. L. 104–182, title I, §120(a), title V, §501(b)(2), (f)(3), Aug. 6, 1996, 110 Stat. 1650, 1691.)

REFERENCES IN TEXT

The Clean Water Act, referred to in subsec. (k), is act June 30, 1948, ch. 758, as amended generally by Pub. L. 92–500, §2, Oct. 18, 1972, 86 Stat. 816, also known as the Federal Water Pollution Control Act, which is classified generally to chapter 26 (§1251 et seq.) of Title 33, Navigation and Navigable Waters. For complete classification of this Act to the Code, see Short Title note set out under section 1251 of Title 33 and Tables.

The Solid Waste Disposal Act, referred to in subsec. (k), is title II of Pub. L. 89–272, Oct. 20, 1965, 79 Stat. 997, as amended generally by Pub. L. 94–580, §2, Oct. 21, 1976, 90 Stat. 2795, which is classified generally to chapter 82 (§6901 et seq.) of this title. For complete classification of this Act to the Code, see Short Title note set out under section 6901 of this title and Tables.

The Comprehensive Environmental Response, Compensation, and Liability Act of 1980, referred to in subsec. (k), is Pub. L. 96–510, Dec. 11, 1980, 94 Stat. 2767, as amended, which is classified principally to chapter 103 (§9601 et seq.) of this title. For complete classification of this Act to the Code, see Short Title note set out under section 9601 of this title and Tables.

AMENDMENTS

1996—Pub. L. 104–182, §501(f)(3), made technical amendment to section catchline and subsec. (a) designation.

Subsec. (b)(1). Pub. L. 104–182, §120(a)(1), struck out "not later than 24 months after June 19, 1986," after "by the Administrator".

Subsec. (k). Pub. L. 104–182, §501(b)(2), substituted "this section" for "this subsection".

Subsec. (m). Pub. L. 104–182, §120(a)(2), inserted table item relating to fiscal years 1992 through 2003.

1995—Subsecs. (*l*) to (n). Pub. L. 104–66 redesignated subsecs. (m) and (n) as (*l*) and (m), respectively, and struck out heading and text of former subsec. (*l*). Text read as follows: "Not later than December 31, 1989, each State shall submit to the Administrator a report assessing the impact of the program on ground water quality and identifying those measures found to be effective in protecting ground water resources. No later than September 30, 1990, the Administrator shall submit to Congress a report summarizing the State reports, and assessing the accomplishments of the sole source aquifer demonstration program including an identification of protection methods found to be most effective and recommendations for their application to protect ground water resources from contamination whenever necessary."

1986—Subsec. (n). Pub. L. 99–339 added subsec. (n).

§300h–7. State programs to establish wellhead protection areas

(a) State programs

The Governor or Governor's designee of each State shall, within 3 years of June 19, 1986, adopt and submit to the Administrator a State program to protect wellhead areas within their jurisdiction from contaminants which may have any adverse effect on the health of persons. Each State program under this section shall, at a minimum—

(1) specify the duties of State agencies, local governmental entities, and public water supply systems with respect to the development and implementation of programs required by this section;

(2) for each wellhead, determine the wellhead protection area as defined in subsection (e) of this section based on all reasonably available hydrogeologic information on ground water flow, recharge and discharge and other information the State deems necessary to adequately determine the wellhead protection area;

(3) identify within each wellhead protection area all potential anthropogenic sources of contaminants which may have any adverse effect on the health of persons;

(4) describe a program that contains, as appropriate, technical assistance, financial assistance, implementation of control measures, education, training, and demonstration projects to protect the water supply within wellhead protection areas from such contaminants;

(5) include contingency plans for the location and provision of alternate drinking water supplies for each public water system in the event of well or wellfield contamination by such contaminants; and

(6) include a requirement that consideration be given to all potential sources of such contaminants within the expected wellhead area of a new water well which serves a public water supply system.

(b) Public participation

To the maximum extent possible, each State shall establish procedures, including but not

limited to the establishment of technical and citizens' advisory committees, to encourage the public to participate in developing the protection program for wellhead areas and source water assessment programs under section 300j–13 of this title. Such procedures shall include notice and opportunity for public hearing on the State program before it is submitted to the Administrator.

(c) Disapproval

(1) In general

If, in the judgment of the Administrator, a State program or portion thereof under subsection (a) of this section is not adequate to protect public water systems as required by subsection (a) of this section or a State program under section 300j–13 of this title or section 300g–7(b) of this title does not meet the applicable requirements of section 300j–13 of this title or section 300g–7(b) of this title, the Administrator shall disapprove such program or portion thereof. A State program developed pursuant to subsection (a) of this section shall be deemed to be adequate unless the Administrator determines, within 9 months of the receipt of a State program, that such program (or portion thereof) is inadequate for the purpose of protecting public water systems as required by this section from contaminants that may have any adverse effect on the health of persons. A State program developed pursuant to section 300j–13 of this title or section 300g–7(b) of this title shall be deemed to meet the applicable requirements of section 300j–13 of this title or section 300g–7(b) of this title unless the Administrator determines within 9 months of the receipt of the program that such program (or portion thereof) does not meet such requirements. If the Administrator determines that a proposed State program (or any portion thereof) is disapproved, the Administrator shall submit a written statement of the reasons for such determination to the Governor of the State.

(2) Modification and resubmission

Within 6 months after receipt of the Administrator's written notice under paragraph (1) that any proposed State program (or portion thereof) is disapproved, the Governor or Governor's designee, shall modify the program based upon the recommendations of the Administrator and resubmit the modified program to the Administrator.

(d) Federal assistance

After the date 3 years after June 19, 1986, no State shall receive funds authorized to be appropriated under this section except for the purpose of implementing the program and requirements of paragraphs (4) and (6) of subsection (a) of this section.

(e) "Wellhead protection area" defined

As used in this section, the term ''wellhead protection area'' means the surface and subsurface area surrounding a water well or wellfield, supplying a public water system, through which contaminants are reasonably likely to move toward and reach such water well or wellfield. The extent of a wellhead protection area, within a State, necessary to provide protection from contaminants which may have any adverse effect on the health of persons is to be determined by the State in the program submitted under subsection (a) of this section. Not later than one year after June 19, 1986, the Administrator shall issue technical guidance which States may use in making such determinations. Such guidance may reflect such factors as the radius of influence around a well or wellfield, the depth of drawdown of the water table by such well or wellfield at any given point, the time or rate of travel of various contaminants in various hydrologic conditions, distance from the well or wellfield, or other factors affecting the likelihood of contaminants reaching the well or wellfield, taking into account available engineering pump tests or comparable data, field reconnaissance, topographic information, and the geology of the formation in which the well or wellfield is located.

(f) Prohibitions

(1) Activities under other laws

No funds authorized to be appropriated under this section may be used to support activities authorized by the Federal Water Pollution Control Act [33 U.S.C. 1251 et seq.], the Solid Waste Disposal Act [42 U.S.C. 6901 et seq.], the Comprehensive Environmental Response, Compensation, and Liability Act of 1980 [42 U.S.C. 9601 et seq.], or other sections of this chapter.

(2) Individual sources

No funds authorized to be appropriated under this section may be used to bring individual sources of contamination into compliance.

(g) Implementation

Each State shall make every reasonable effort to implement the State wellhead area protection program under this section within 2 years of submitting the program to the Administrator. Each State shall submit to the Administrator a biennial status report describing the State's progress in implementing the program. Such report shall include amendments to the State program for water wells sited during the biennial period.

(h) Federal agencies

Each department, agency, and instrumentality of the executive, legislative, and judicial branches of the Federal Government having jurisdiction over any potential source of contaminants identified by a State program pursuant to the provisions of subsection (a)(3) of this section shall be subject to and comply with all requirements of the State program developed according to subsection (a)(4) of this section applicable to such potential source of contaminants, both substantive and procedural, in the same manner, and to the same extent, as any other person is subject to such requirements, including payment of reasonable charges and fees. The President may exempt any potential source under the jurisdiction of any department, agency, or instrumentality in the executive branch if the President determines it to be in the paramount interest of the United States to do so. No such

exemption shall be granted due to the lack of an appropriation unless the President shall have specifically requested such appropriation as part of the budgetary process and the Congress shall have failed to make available such requested appropriations.

(i) Additional requirement

(1) In general

In addition to the provisions of subsection (a) of this section, States in which there are more than 2,500 active wells at which annular injection is used as of January 1, 1986, shall include in their State program a certification that a State program exists and is being adequately enforced that provides protection from contaminants which may have any adverse effect on the health of persons and which are associated with the annular injection or surface disposal of brines associated with oil and gas production.

(2) "Annular injection" defined

For purposes of this subsection, the term ''annular injection'' means the reinjection of brines associated with the production of oil or gas between the production and surface casings of a conventional oil or gas producing well.

(3) Review

The Administrator shall conduct a review of each program certified under this subsection.

(4) Disapproval

If a State fails to include the certification required by this subsection or if in the judgment of the Administrator the State program certified under this subsection is not being adequately enforced, the Administrator shall disapprove the State program submitted under subsection (a) of this section.

(j) Coordination with other laws

Nothing in this section shall authorize or require any department, agency, or other instrumentality of the Federal Government or State or local government to apportion, allocate or otherwise regulate the withdrawal or beneficial use of ground or surface waters, so as to abrogate or modify any existing rights to water established pursuant to State or Federal law, including interstate compacts.

(k) Authorization of appropriations

Unless the State program is disapproved under this section, the Administrator shall make grants to the State for not less than 50 or more than 90 percent of the costs incurred by a State (as determined by the Administrator) in developing and implementing each State program under this section. For purposes of making such grants there is authorized to be appropriated not more than the following amounts:

Fiscal year:	*Amount*
1987	$20,000,000
1988	20,000,000
1989	35,000,000
1990	35,000,000
1991	35,000,000
1992–2003	30,000,000.

(July 1, 1944, ch. 373, title XIV, §1428, as added and amended Pub. L. 99–339, title II, §205, title III, §301(e), June 19, 1986, 100 Stat. 660, 664; Pub. L. 104–182, title I, §§120(b), 132(b), title V, §501(f)(4), Aug. 6, 1996, 110 Stat. 1650, 1674, 1692.)

REFERENCES IN TEXT

The Federal Water Pollution Control Act, referred to in subsec. (f)(1), is act June 30, 1948, ch. 758, as amended generally by Pub. L. 92–500, §2, Oct. 18, 1972, 86 Stat. 816, which is classified generally to chapter 26 (§1251 et seq.) of Title 33, Navigation and Navigable Waters. For complete classification of this Act to the Code, see Short Title note set out under section 1251 of Title 33 and Tables.

The Solid Waste Disposal Act, referred to in subsec. (f)(1), is title II of Pub. L. 89–272, Oct. 20, 1965, 79 Stat. 997, as amended generally by Pub. L. 94–580, §2, Oct. 21, 1976, 90 Stat. 2795, which is classified generally to chapter 82 (§6901 et seq.) of this title. For complete classification of this Act to the Code, see Short Title note set out under section 6901 of this title and Tables.

The Comprehensive Environmental Response, Compensation, and Liability Act of 1980, referred to in subsec. (f)(1), is Pub. L. 96–510, Dec. 11, 1980, 94 Stat. 2767, as amended, which is classified principally to chapter 103 (§9601 et seq.) of this title. For complete classification of this Act to the Code, see Short Title note set out under section 9601 of this title and Tables.

AMENDMENTS

1996—Pub. L. 104–182, §501(f)(4), made technical amendment to section catchline and subsec. (a) designation.

Subsec. (b). Pub. L. 104–182, §132(b)(4), inserted before period at end of first sentence ''and source water assessment programs under section 300j–13 of this title''.

Subsec. (c)(1). Pub. L. 104–182, §132(b)(3), which directed substitution of ''is disapproved'' for ''is inadequate'' in third sentence, was executed by making the substitution in fourth sentence to reflect the probable intent of Congress and the amendment by Pub. L. 104–182, §132(b)(2). See below.

Pub. L. 104–182, §132(b)(2), inserted after second sentence ''A State program developed pursuant to section 300j–13 of this title or section 300g–7(b) of this title shall be deemed to meet the applicable requirements of section 300j–13 of this title or section 300g–7(b) of this title unless the Administrator determines within 9 months of the receipt of the program that such program (or portion thereof) does not meet such requirements.''

Pub. L. 104–182, §132(b)(1), amended first sentence generally. Prior to amendment, first sentence read as follows: ''If, in the judgment of the Administrator, a State program (or portion thereof, including the definition of a wellhead protection area), is not adequate to protect public water systems as required by this section, the Administrator shall disapprove such program (or portion thereof).''

Subsec. (c)(2). Pub. L. 104–182, §132(b)(3), substituted ''is disapproved'' for ''is inadequate''.

Subsec. (k). Pub. L. 104–182, §120(b), inserted table item relating to fiscal years 1992 through 2003.

1986—Subsec. (k). Pub. L. 99–339, §301(e), added subsec. (k).

§ 300h–8. State ground water protection grants

(a) In general

The Administrator may make a grant to a State for the development and implementation of a State program to ensure the coordinated and comprehensive protection of ground water resources within the State.

(b) Guidance

Not later than 1 year after August 6, 1996, and annually thereafter, the Administrator shall publish guidance that establishes procedures for application for State ground water protection

program assistance and that identifies key elements of State ground water protection programs.

(c) Conditions of grants

(1) In general

The Administrator shall award grants to States that submit an application that is approved by the Administrator. The Administrator shall determine the amount of a grant awarded pursuant to this paragraph on the basis of an assessment of the extent of ground water resources in the State and the likelihood that awarding the grant will result in sustained and reliable protection of ground water quality.

(2) Innovative program grants

The Administrator may also award a grant pursuant to this subsection for innovative programs proposed by a State for the prevention of ground water contamination.

(3) Allocation of funds

The Administrator shall, at a minimum, ensure that, for each fiscal year, not less than 1 percent of funds made available to the Administrator by appropriations to carry out this section are allocated to each State that submits an application that is approved by the Administrator pursuant to this section.

(4) Limitation on grants

No grant awarded by the Administrator may be used for a project to remediate ground water contamination.

(d) Amount of grants

The amount of a grant awarded pursuant to paragraph (1) shall not exceed 50 percent of the eligible costs of carrying out the ground water protection program that is the subject of the grant (as determined by the Administrator) for the 1-year period beginning on the date that the grant is awarded. The State shall pay a State share to cover the costs of the ground water protection program from State funds in an amount that is not less than 50 percent of the cost of conducting the program.

(e) Evaluations and reports

Not later than 3 years after August 6, 1996, and every 3 years thereafter, the Administrator shall evaluate the State ground water protection programs that are the subject of grants awarded pursuant to this section and report to the Congress on the status of ground water quality in the United States and the effectiveness of State programs for ground water protection.

(f) Authorization of appropriations

There are authorized to be appropriated to carry out this section $15,000,000 for each of fiscal years 1997 through 2003.

(July 1, 1944, ch. 373, title XIV, § 1429, as added Pub. L. 104–182, title I, § 131, Aug. 6, 1996, 110 Stat. 1672.)

PART D—EMERGENCY POWERS

§ 300i. Emergency powers

(a) Actions authorized against imminent and substantial endangerment to health

Notwithstanding any other provision of this subchapter the Administrator, upon receipt of information that a contaminant which is present in or is likely to enter a public water system or an underground source of drinking water, or that there is a threatened or potential terrorist attack (or other intentional act designed to disrupt the provision of safe drinking water or to impact adversely the safety of drinking water supplied to communities and individuals), which may present an imminent and substantial endangerment to the health of persons, and that appropriate State and local authorities have not acted to protect the health of such persons, may take such actions as he may deem necessary in order to protect the health of such persons. To the extent he determines it to be practicable in light of such imminent endangerment, he shall consult with the State and local authorities in order to confirm the correctness of the information on which action proposed to be taken under this subsection is based and to ascertain the action which such authorities are or will be taking. The action which the Administrator may take may include (but shall not be limited to) (1) issuing such orders as may be necessary to protect the health of persons who are or may be users of such system (including travelers), including orders requiring the provision of alternative water supplies by persons who caused or contributed to the endangerment, and (2) commencing a civil action for appropriate relief, including a restraining order or permanent or temporary injunction.

(b) Penalties for violations; separate offenses

Any person who violates or fails or refuses to comply with any order issued by the Administrator under subsection (a)(1) of this section may, in an action brought in the appropriate United States district court to enforce such order, be subject to a civil penalty of not to exceed $15,000 for each day in which such violation occurs or failure to comply continues.

(July 1, 1944, ch. 373, title XIV, § 1431, as added Pub. L. 93–523, § 2(a), Dec. 16, 1974, 88 Stat. 1680; amended Pub. L. 99–339, title II, § 204, June 19, 1986, 100 Stat. 660; Pub. L. 104–182, title I, § 113(d), Aug. 6, 1996, 110 Stat. 1636; Pub. L. 107–188, title IV, § 403(2), June 12, 2002, 116 Stat. 687.)

AMENDMENTS

2002—Subsec. (a). Pub. L. 107–188, in first sentence, inserted ", or that there is a threatened or potential terrorist attack (or other intentional act designed to disrupt the provision of safe drinking water or to impact adversely the safety of drinking water supplied to communities and individuals), which" after "drinking water".

1996—Subsec. (b). Pub. L. 104–182 substituted "$15,000" for "$5,000".

1986—Subsec. (a). Pub. L. 99–339, § 204(1), (2), inserted "or an underground source of drinking water" after "to enter a public water system" and "including orders requiring the provision of alternative water supplies by persons who caused or contributed to the endangerment," after "including travelers),".

Subsec. (b). Pub. L. 99–339, § 204(3), struck out "willfully" after "person who" and substituted "subject to a civil penalty of not to exceed" for "fined not more than".

§ 300i–1. Tampering with public water systems

(a) Tampering

Any person who tampers with a public water system shall be imprisoned for not more than 20

years, or fined in accordance with title 18, or both.

(b) Attempt or threat

Any person who attempts to tamper, or makes a threat to tamper, with a public drinking water system be imprisoned for not more than 10 years, or fined in accordance with title 18, or both.

(c) Civil penalty

The Administrator may bring a civil action in the appropriate United States district court (as determined under the provisions of title 28) against any person who tampers, attempts to tamper, or makes a threat to tamper with a public water system. The court may impose on such person a civil penalty of not more than $1,000,000 for such tampering or not more than $100,000 for such attempt or threat.

(d) "Tamper" defined

For purposes of this section, the term ''tamper'' means—

(1) to introduce a contaminant into a public water system with the intention of harming persons; or

(2) to otherwise interfere with the operation of a public water system with the intention of harming persons.

(July 1, 1944, ch. 373, title XIV, § 1432, as added Pub. L. 99–339, title I, § 108, June 19, 1986, 100 Stat. 651; amended Pub. L. 104–182, title V, § 501(f)(5), Aug. 6, 1996, 110 Stat. 1692; Pub. L. 107–188, title IV, § 403(3), June 12, 2002, 116 Stat. 687.)

AMENDMENTS

2002—Subsec. (a). Pub. L. 107–188, § 403(3)(A), substituted ''20 years'' for ''5 years''.

Subsec. (b). Pub. L. 107–188, § 403(3)(B), substituted ''10 years'' for ''3 years''.

Subsec. (c). Pub. L. 107–188, § 403(3)(C), (D), substituted ''$1,000,000'' for ''$50,000'' and ''$100,000'' for ''$20,000''.

1996—Pub. L. 104–182 made technical amendment to section catchline and subsec. (a) designation.

§ 300i–2. Terrorist and other intentional acts

(a) Vulnerability assessments

(1) Each community water system serving a population of greater than 3,300 persons shall conduct an assessment of the vulnerability of its system to a terrorist attack or other intentional acts intended to substantially disrupt the ability of the system to provide a safe and reliable supply of drinking water. The vulnerability assessment shall include, but not be limited to, a review of pipes and constructed conveyances, physical barriers, water collection, pretreatment, treatment, storage and distribution facilities, electronic, computer or other automated systems which are utilized by the public water system, the use, storage, or handling of various chemicals, and the operation and maintenance of such system. The Administrator, not later than August 1, 2002, after consultation with appropriate departments and agencies of the Federal Government and with State and local governments, shall provide baseline information to community water systems required to conduct vulnerability assessments regarding which kinds of terrorist attacks or other intentional acts are the probable threats to—

(A) substantially disrupt the ability of the system to provide a safe and reliable supply of drinking water; or

(B) otherwise present significant public health concerns.

(2) Each community water system referred to in paragraph (1) shall certify to the Administrator that the system has conducted an assessment complying with paragraph (1) and shall submit to the Administrator a written copy of the assessment. Such certification and submission shall be made prior to:

(A) March 31, 2003, in the case of systems serving a population of 100,000 or more.

(B) December 31, 2003, in the case of systems serving a population of 50,000 or more but less than 100,000.

(C) June 30, 2004, in the case of systems serving a population greater than 3,300 but less than 50,000.

(3) Except for information contained in a certification under this subsection identifying the system submitting the certification and the date of the certification, all information provided to the Administrator under this subsection and all information derived therefrom shall be exempt from disclosure under section 552 of title 5.

(4) No community water system shall be required under State or local law to provide an assessment described in this section to any State, regional, or local governmental entity solely by reason of the requirement set forth in paragraph (2) that the system submit such assessment to the Administrator.

(5) Not later than November 30, 2002, the Administrator, in consultation with appropriate Federal law enforcement and intelligence officials, shall develop such protocols as may be necessary to protect the copies of the assessments required to be submitted under this subsection (and the information contained therein) from unauthorized disclosure. Such protocols shall ensure that—

(A) each copy of such assessment, and all information contained in or derived from the assessment, is kept in a secure location;

(B) only individuals designated by the Administrator may have access to the copies of the assessments; and

(C) no copy of an assessment, or part of an assessment, or information contained in or derived from an assessment shall be available to anyone other than an individual designated by the Administrator.

At the earliest possible time prior to November 30, 2002, the Administrator shall complete the development of such protocols for the purpose of having them in place prior to receiving any vulnerability assessments from community water systems under this subsection.

(6)(A) Except as provided in subparagraph (B), any individual referred to in paragraph (5)(B) who acquires the assessment submitted under paragraph (2), or any reproduction of such assessment, or any information derived from such assessment, and who knowingly or recklessly reveals such assessment, reproduction, or information other than—

(i) to an individual designated by the Administrator under paragraph (5),

(ii) for purposes of section 300j–4 of this title or for actions under section 300i of this title, or

(iii) for use in any administrative or judicial proceeding to impose a penalty for failure to comply with this section,

shall upon conviction be imprisoned for not more than one year or fined in accordance with the provisions of chapter 227 of title 18 applicable to class A misdemeanors, or both, and shall be removed from Federal office or employment.

(B) Notwithstanding subparagraph (A), an individual referred to in paragraph (5)(B) who is an officer or employee of the United States may discuss the contents of a vulnerability assessment submitted under this section with a State or local official.

(7) Nothing in this section authorizes any person to withhold any information from Congress or from any committee or subcommittee of Congress.

(b) Emergency response plan

Each community water system serving a population greater than 3,300 shall prepare or revise, where necessary, an emergency response plan that incorporates the results of vulnerability assessments that have been completed. Each such community water system shall certify to the Administrator, as soon as reasonably possible after the enactment of this section, but not later than 6 months after the completion of the vulnerability assessment under subsection (a) of this section, that the system has completed such plan. The emergency response plan shall include, but not be limited to, plans, procedures, and identification of equipment that can be implemented or utilized in the event of a terrorist or other intentional attack on the public water system. The emergency response plan shall also include actions, procedures, and identification of equipment which can obviate or significantly lessen the impact of terrorist attacks or other intentional actions on the public health and the safety and supply of drinking water provided to communities and individuals. Community water systems shall, to the extent possible, coordinate with existing Local Emergency Planning Committees established under the Emergency Planning and Community Right-to-Know Act (42 U.S.C. 11001 et seq.) when preparing or revising an emergency response plan under this subsection.

(c) Record maintenance

Each community water system shall maintain a copy of the emergency response plan completed pursuant to subsection (b) of this section for 5 years after such plan has been certified to the Administrator under this section.

(d) Guidance to small public water systems

The Administrator shall provide guidance to community water systems serving a population of less than 3,300 persons on how to conduct vulnerability assessments, prepare emergency response plans, and address threats from terrorist attacks or other intentional actions designed to disrupt the provision of safe drinking water or significantly affect the public health or significantly affect the safety or supply of drinking water provided to communities and individuals.

(e) Funding

(1) There are authorized to be appropriated to carry out this section not more than $160,000,000 for the fiscal year 2002 and such sums as may be necessary for the fiscal years 2003 through 2005.

(2) The Administrator, in coordination with State and local governments, may use funds made available under paragraph (1) to provide financial assistance to community water systems for purposes of compliance with the requirements of subsections (a) and (b) of this section and to community water systems for expenses and contracts designed to address basic security enhancements of critical importance and significant threats to public health and the supply of drinking water as determined by a vulnerability assessment conducted under subsection (a) of this section. Such basic security enhancements may include, but shall not be limited to the following:

(A) the purchase and installation of equipment for detection of intruders;

(B) the purchase and installation of fencing, gating, lighting, or security cameras;

(C) the tamper-proofing of manhole covers, fire hydrants, and valve boxes;

(D) the rekeying of doors and locks;

(E) improvements to electronic, computer, or other automated systems and remote security systems;

(F) participation in training programs, and the purchase of training manuals and guidance materials, relating to security against terrorist attacks;

(G) improvements in the use, storage, or handling of various chemicals; and

(H) security screening of employees or contractor support services.

Funding under this subsection for basic security enhancements shall not include expenditures for personnel costs, or monitoring, operation, or maintenance of facilities, equipment, or systems.

(3) The Administrator may use not more than $5,000,000 from the funds made available under paragraph (1) to make grants to community water systems to assist in responding to and alleviating any vulnerability to a terrorist attack or other intentional acts intended to substantially disrupt the ability of the system to provide a safe and reliable supply of drinking water (including sources of water for such systems) which the Administrator determines to present an immediate and urgent security need.

(4) The Administrator may use not more than $5,000,000 from the funds made available under paragraph (1) to make grants to community water systems serving a population of less than 3,300 persons for activities and projects undertaken in accordance with the guidance provided to such systems under subsection (d) of this section.

(July 1, 1944, ch. 373, title XIV, § 1433, as added Pub. L. 107–188, title IV, § 401, June 12, 2002, 116 Stat. 682.)

REFERENCES IN TEXT

The Emergency Planning and Community Right-to-Know Act, referred to in subsec. (b), probably means the Emergency Planning and Community Right-to-

Know Act of 1986, Pub. L. 99–499, title III, Oct. 17, 1986, 100 Stat. 1728, which is classified generally to chapter 116 (§ 11001 et seq.) of this title. For complete classification of this Act to the Code, see Short Title note set out under section 11001 of this title and Tables.

§ 300i–3. Contaminant prevention, detection and response

(a) In general

The Administrator, in consultation with the Centers for Disease Control and, after consultation with appropriate departments and agencies of the Federal Government and with State and local governments, shall review (or enter into contracts or cooperative agreements to provide for a review of) current and future methods to prevent, detect and respond to the intentional introduction of chemical, biological or radiological contaminants into community water systems and source water for community water systems, including each of the following:

(1) Methods, means and equipment, including real time monitoring systems, designed to monitor and detect various levels of chemical, biological, and radiological contaminants or indicators of contaminants and reduce the likelihood that such contaminants can be successfully introduced into public water systems and source water intended to be used for drinking water.

(2) Methods and means to provide sufficient notice to operators of public water systems, and individuals served by such systems, of the introduction of chemical, biological or radiological contaminants and the possible effect of such introduction on public health and the safety and supply of drinking water.

(3) Methods and means for developing educational and awareness programs for community water systems.

(4) Procedures and equipment necessary to prevent the flow of contaminated drinking water to individuals served by public water systems.

(5) Methods, means, and equipment which could negate or mitigate deleterious effects on public health and the safety and supply caused by the introduction of contaminants into water intended to be used for drinking water, including an examination of the effectiveness of various drinking water technologies in removing, inactivating, or neutralizing biological, chemical, and radiological contaminants.

(6) Biomedical research into the short-term and long-term impact on public health of various chemical, biological and radiological contaminants that may be introduced into public water systems through terrorist or other intentional acts.

(b) Funding

For the authorization of appropriations to carry out this section, see section 300i–4(e) of this title.

(July 1, 1944, ch. 373, title XIV, § 1434, as added Pub. L. 107–188, title IV, § 402, June 12, 2002, 116 Stat. 685.)

CHANGE OF NAME

Centers for Disease Control changed to Centers for Disease Control and Prevention by Pub. L. 102–531, title III, § 312, Oct. 27, 1992, 106 Stat. 3504.

§ 300i–4. Supply disruption prevention, detection and response

(a) Disruption of supply or safety

The Administrator, in coordination with the appropriate departments and agencies of the Federal Government, shall review (or enter into contracts or cooperative agreements to provide for a review of) methods and means by which terrorists or other individuals or groups could disrupt the supply of safe drinking water or take other actions against water collection, pretreatment, treatment, storage and distribution facilities which could render such water significantly less safe for human consumption, including each of the following:

(1) Methods and means by which pipes and other constructed conveyances utilized in public water systems could be destroyed or otherwise prevented from providing adequate supplies of drinking water meeting applicable public health standards.

(2) Methods and means by which collection, pretreatment, treatment, storage and distribution facilities utilized or used in connection with public water systems and collection and pretreatment storage facilities used in connection with public water systems could be destroyed or otherwise prevented from providing adequate supplies of drinking water meeting applicable public health standards.

(3) Methods and means by which pipes, constructed conveyances, collection, pretreatment, treatment, storage and distribution systems that are utilized in connection with public water systems could be altered or affected so as to be subject to cross-contamination of drinking water supplies.

(4) Methods and means by which pipes, constructed conveyances, collection, pretreatment, treatment, storage and distribution systems that are utilized in connection with public water systems could be reasonably protected from terrorist attacks or other acts intended to disrupt the supply or affect the safety of drinking water.

(5) Methods and means by which information systems, including process controls and supervisory control and data acquisition and cyber systems at community water systems could be disrupted by terrorists or other groups.

(b) Alternative sources

The review under this section shall also include a review of the methods and means by which alternative supplies of drinking water could be provided in the event of the destruction, impairment or contamination of public water systems.

(c) Requirements and considerations

In carrying out this section and section 300i–3 of this title—

(1) the Administrator shall ensure that reviews carried out under this section reflect the needs of community water systems of various sizes and various geographic areas of the United States; and

(2) the Administrator may consider the vulnerability of, or potential for forced interruption of service for, a region or service area, including community water systems that provide service to the National Capital area.

(d) Information sharing

As soon as practicable after reviews carried out under this section or section 300i–3 of this title have been evaluated, the Administrator shall disseminate, as appropriate as determined by the Administrator, to community water systems information on the results of the project through the Information Sharing and Analysis Center, or other appropriate means.

(e) Funding

There are authorized to be appropriated to carry out this section and section 300i–3 of this title not more than $15,000,000 for the fiscal year 2002 and such sums as may be necessary for the fiscal years 2003 through 2005.

(July 1, 1944, ch. 373, title XIV, § 1435, as added Pub. L. 107–188, title IV, § 402, June 12, 2002, 116 Stat. 686.)

PART E—GENERAL PROVISIONS

§ 300j. Assurances of availability of adequate supplies of chemicals necessary for treatment of water

(a) Certification of need application

If any person who uses chlorine, activated carbon, lime, ammonia, soda ash, potassium permanganate, caustic soda, or other chemical or substance for the purpose of treating water in any public water system or in any public treatment works determines that the amount of such chemical or substance necessary to effectively treat such water is not reasonably available to him or will not be so available to him when required for the effective treatment of such water, such person may apply to the Administrator for a certification (hereinafter in this section referred to as a "certification of need") that the amount of such chemical or substance which such person requires to effectively treat such water is not reasonably available to him or will not be so available when required for the effective treatment of such water.

(b) Application requirements; publication in Federal Register; waiver; certification, issuance or denial

(1) An application for a certification of need shall be in such form and submitted in such manner as the Administrator may require and shall (A) specify the persons the applicant determines are able to provide the chemical or substance with respect to which the application is submitted, (B) specify the persons from whom the applicant has sought such chemical or substance, and (C) contain such other information as the Administrator may require.

(2) Upon receipt of an application under this section, the Administrator shall (A) publish in the Federal Register a notice of the receipt of the application and a brief summary of it, (B) notify in writing each person whom the President or his delegate (after consultation with the Administrator) determines could be made subject to an order required to be issued upon the issuance of the certification of need applied for in such application, and (C) provide an opportunity for the submission of written comments on such application. The requirements of the preceding sentence of this paragraph shall not apply when the Administrator for good cause finds (and incorporates the finding with a brief statement of reasons therefor in the order issued) that waiver of such requirements is necessary in order to protect the public health.

(3) Within 30 days after—

(A) the date a notice is published under paragraph (2) in the Federal Register with respect to an application submitted under this section for the issuance of a certification of need, or

(B) the date on which such application is received if as authorized by the second sentence of such paragraph no notice is published with respect to such application,

the Administrator shall take action either to issue or deny the issuance of a certification of need.

(c) Certification of need; issuance; executive orders; implementation of orders; equitable apportionment of orders; factors considered

(1) If the Administrator finds that the amount of a chemical or substance necessary for an applicant under an application submitted under this section to effectively treat water in a public water system or in a public treatment works is not reasonably available to the applicant or will not be so available to him when required for the effective treatment of such water, the Administrator shall issue a certification of need. Not later than seven days following the issuance of such certification, the President or his delegate shall issue an order requiring the provision to such person of such amounts of such chemical or substance as the Administrator deems necessary in the certification of need issued for such person. Such order shall apply to such manufactures, producers, processors, distributors, and repackagers of such chemical or substance as the President or his delegate deems necessary and appropriate, except that such order may not apply to any manufacturer, producer, or processor of such chemical or substance who manufactures, produces, or processes (as the case may be) such chemical or substance solely for its own use. Persons subject to an order issued under this section shall be given a reasonable opportunity to consult with the President or his delegate with respect to the implementation of the order.

(2) Orders which are to be issued under paragraph (1) to manufacturers, producers, and processors of a chemical or substance shall be equitably apportioned, as far as practicable, among all manufacturers, producers, and processors of such chemical or substance; and orders which are to be issued under paragraph (1) to distributors and repackagers of a chemical or substance shall be equitably apportioned, as far as practicable, among all distributors and repackagers of such chemical or substance. In apportioning orders issued under paragraph (1) to manufacturers, producers, processors, distributors, and repackagers of chlorine, the President or his delegate shall, in carrying out the requirements of the preceding sentence, consider—

(A) the geographical relationships and established commercial relationships between such manufacturers, producers, processors, dis-

tributors, and repackagers and the persons for whom the orders are issued;

(B) in the case of orders to be issued to producers of chlorine, the (i) amount of chlorine historically supplied by each such producer to treat water in public water systems and public treatment works, and (ii) share of each such producer of the total annual production of chlorine in the United States; and

(C) such other factors as the President or his delegate may determine are relevant to the apportionment of orders in accordance with the requirements of the preceding sentence.

(3) Subject to subsection (f) of this section, any person for whom a certification of need has been issued under this subsection may upon the expiration of the order issued under paragraph (1) upon such certification apply under this section for additional certifications.

(d) Breach of contracts; defense

There shall be available as a defense to any action brought for breach of contract in a Federal or State court arising out of delay or failure to provide, sell, or offer for sale or exchange a chemical or substance subject to an order issued pursuant to subsection (c)(1) of this section, that such delay or failure was caused solely by compliance with such order.

(e) Penalties for noncompliance with orders; temporary restraining orders and preliminary or permanent injunctions

(1) Whoever knowingly fails to comply with any order issued pursuant to subsection (c)(1) of this section shall be fined not more than $5,000 for each such failure to comply.

(2) Whoever fails to comply with any order issued pursuant to subsection (c)(1) of this section shall be subject to a civil penalty of not more than $2,500 for each such failure to comply.

(3) Whenever the Administrator or the President or his delegate has reason to believe that any person is violating or will violate any order issued pursuant to subsection (c)(1) of this section, he may petition a United States district court to issue a temporary restraining order or preliminary or permanent injunction (including a mandatory injunction) to enforce the provision of such order.

(f) Termination date

No certification of need or order issued under this section may remain in effect for more than one year.

(July 1, 1944, ch. 373, title XIV, §1441, as added Pub. L. 93–523, §2(a), Dec. 16, 1974, 88 Stat. 1680; amended Pub. L. 95–190, §7, Nov. 16, 1977, 91 Stat. 1396; Pub. L. 96–63, §3, Sept. 6, 1979, 93 Stat. 411; Pub. L. 99–339, title III, §301(d), June 19, 1986, 100 Stat. 664; Pub. L. 104–182, title V, §501(c), Aug. 6, 1996, 110 Stat. 1691.)

AMENDMENTS

1996—Subsec. (f). Pub. L. 104–182 inserted a period after "year".

1986—Subsec. (f). Pub. L. 99–339 substituted "in effect for more than one year" for "in effect— (1) for more than one year, or (2) September 30, 1982, whichever occurs first."

1979—Subsec. (f)(2). Pub. L. 96–63 substituted "September 30, 1982" for "September 30, 1979".

1977—Subsec. (f). Pub. L. 95–190 substituted "September 30, 1979" for "June 30, 1977".

EX. ORD. NO. 11879. DELEGATION OF FUNCTIONS TO SECRETARY OF COMMERCE RELATING TO ORDERS FOR PROVISION OF CHEMICALS OR SUBSTANCES NECESSARY FOR TREATMENT OF WATER

Ex. Ord. No. 11879, Sept. 17, 1975, 40 F.R. 43197, provided:

By virtue of the authority vested in me by Section 1441 of the Public Health Service Act, as amended by the Safe Drinking Water Act [now Safe Drinking Water Act of 1974] (88 Stat. 1680, 42 U.S.C. 300j), and as President of the United States, the Secretary of Commerce is hereby delegated, with power to redelegate to agencies, officers and employees of the Government, the functions of the President contained in said section 1441 [this section]. Those functions shall be administered under regulations or agreements which are identical or compatible with other regulations and agreements, including those provided pursuant to Executive Order No. 10480, as amended [formerly set out as a note under section 2153 of Title 50, Appendix, War and National Defense], for the allocation of similar chemicals or substances.

GERALD R. FORD.

§ 300j–1. Research, technical assistance, information, training of personnel

(a) Specific powers and duties of Administrator

(1) The Administrator may conduct research, studies, and demonstrations relating to the causes, diagnosis, treatment, control, and prevention of physical and mental diseases and other impairments of man resulting directly or indirectly from contaminants in water, or to the provision of a dependably safe supply of drinking water, including—

(A) improved methods (i) to identify and measure the existence of contaminants in drinking water (including methods which may be used by State and local health and water officials), and (ii) to identify the source of such contaminants;

(B) improved methods to identify and measure the health effects of contaminants in drinking water;

(C) new methods of treating raw water to prepare it for drinking, so as to improve the efficiency of water treatment and to remove contaminants from water;

(D) improved methods for providing a dependably safe supply of drinking water, including improvements in water purification and distribution, and methods of assessing the health related hazards of drinking water; and

(E) improved methods of protecting underground water sources of public water systems from contamination.

(2) INFORMATION AND RESEARCH FACILITIES.—In carrying out this subchapter, the Administrator is authorized to—

(A) collect and make available information pertaining to research, investigations, and demonstrations with respect to providing a dependably safe supply of drinking water, together with appropriate recommendations in connection with the information; and

(B) make available research facilities of the Agency to appropriate public authorities, institutions, and individuals engaged in studies and research relating to this subchapter.

(3) The Administrator shall carry out a study of polychlorinated biphenyl contamination of actual or potential sources of drinking water, contamination of such sources by other substances known or suspected to be harmful to public health, the effects of such contamination, and means of removing, treating, or otherwise controlling such contamination. To assist in carrying out this paragraph, the Administrator is authorized to make grants to public agencies and private nonprofit institutions.

(4) The Administrator shall conduct a survey and study of—

(A) disposal of waste (including residential waste) which may endanger underground water which supplies, or can reasonably be expected to supply, any public water systems, and

(B) means of control of such waste disposal.

Not later than one year after December 16, 1974, he shall transmit to the Congress the results of such survey and study, together with such recommendations as he deems appropriate.

(5) The Administrator shall carry out a study of methods of underground injection which do not result in the degradation of underground drinking water sources.

(6) The Administrator shall carry out a study of methods of preventing, detecting, and dealing with surface spills of contaminants which may degrade underground water sources for public water systems.

(7) The Administrator shall carry out a study of virus contamination of drinking water sources and means of control of such contamination.

(8) The Administrator shall carry out a study of the nature and extent of the impact on underground water which supplies or can reasonably be expected to supply public water systems of (A) abandoned injection or extraction wells; (B) intensive application of pesticides and fertilizers in underground water recharge areas; and (C) ponds, pools, lagoons, pits, or other surface disposal of contaminants in underground water recharge areas.

(9) The Administrator shall conduct a comprehensive study of public water supplies and drinking water sources to determine the nature, extent, sources of and means of control of contamination by chemicals or other substances suspected of being carcinogenic. Not later than six months after December 16, 1974, he shall transmit to the Congress the initial results of such study, together with such recommendations for further review and corrective action as he deems appropriate.

(10) The Administrator shall carry out a study of the reaction of chlorine and humic acids and the effects of the contaminants which result from such reaction on public health and on the safety of drinking water, including any carcinogenic effect.

(b) Emergency situations

The Administrator is authorized to provide technical assistance and to make grants to States, or publicly owned water systems to assist in responding to and alleviating any emergency situation affecting public water systems (including sources of water for such systems) which the Administrator determines to present substantial danger to the public health. Grants provided under this subsection shall be used only to support those actions which (i) are necessary for preventing, limiting or mitigating danger to the public health in such emergency situation and (ii) would not, in the judgment of the Administrator, be taken without such emergency assistance. The Administrator may carry out the program authorized under this subsection as part of, and in accordance with the terms and conditions of, any other program of assistance for environmental emergencies which the Administrator is authorized to carry out under any other provision of law. No limitation on appropriations for any such other program shall apply to amounts appropriated under this subsection.

(c) Establishment of training programs and grants for training; training fees

The Administrator shall—

(1) provide training for, and make grants for training (including postgraduate training) of (A) personnel of State agencies which have primary enforcement responsibility and of agencies or units of local government to which enforcement responsibilities have been delegated by the State, and (B) personnel who manage or operate public water systems, and

(2) make grants for postgraduate training of individuals (including grants to educational institutions for traineeships) for purposes of qualifying such individuals to work as personnel referred to in paragraph (1).

(3) make grants to, and enter into contracts with, any public agency, educational institution, and any other organization, in accordance with procedures prescribed by the Administrator, under which he may pay all or part of the costs (as may be determined by the Administrator) of any project or activity which is designed—

(A) to develop, expand, or carry out a program (which may combine training education and employment) for training persons for occupations involving the public health aspects of providing safe drinking water;

(B) to train inspectors and supervisory personnel to train or supervise persons in occupations involving the public health aspects of providing safe drinking water; or

(C) to develop and expand the capability of programs of States and municipalities to carry out the purposes of this subchapter (other than by carrying out State programs of public water system supervision or underground water source protection (as defined in section 300j–2(c) of this title)).

Reasonable fees may be charged for training provided under paragraph (1)(B) to persons other than personnel of State or local agencies but such training shall be provided to personnel of State or local agencies without charge.

(d) Authorization of appropriations

There are authorized to be appropriated to carry out subsection (b) of this section not more than $35,000,000 for the fiscal year 2002 and such sums as may be necessary for each fiscal year thereafter.

(e) Technical assistance

The Administrator may provide technical assistance to small public water systems to enable such systems to achieve and maintain compliance with applicable national primary drinking water regulations. Such assistance may include circuit-rider and multi-State regional technical assistance programs, training, and preliminary engineering evaluations. The Administrator shall ensure that technical assistance pursuant to this subsection is available in each State. Each nonprofit organization receiving assistance under this subsection shall consult with the State in which the assistance is to be expended or otherwise made available before using assistance to undertake activities to carry out this subsection. There are authorized to be appropriated to the Administrator to be used for such technical assistance $15,000,000 for each of the fiscal years 1997 through 2003. No portion of any State loan fund established under section 300j–12 of this title (relating to State loan funds) and no portion of any funds made available under this subsection may be used for lobbying expenses. Of the total amount appropriated under this subsection, 3 percent shall be used for technical assistance to public water systems owned or operated by Indian Tribes.

(July 1, 1944, ch. 373, title XIV, §1442, as added Pub. L. 93–523, §2(a), Dec. 16, 1974, 88 Stat. 1682; amended Pub. L. 95–190, §§2(a), 3(a), (b), (e)(1), 4, 9, 10(b), 13, Nov. 16, 1977, 91 Stat. 1393–1395, 1397–1399; Pub. L. 96–63, §1, Sept. 6, 1979, 93 Stat. 411; Pub. L. 96–502, §5, Dec. 5, 1980, 94 Stat. 2738; Pub. L. 99–339, title I, §107, title III, §§301(a), (g), 304(a), June 19, 1986, 100 Stat. 651, 663, 665, 667; Pub. L. 104–66, title II, §2021(h), Dec. 21, 1995, 109 Stat. 727; Pub. L. 104–182, title I, §§121, 122, Aug. 6, 1996, 110 Stat. 1651; Pub. L. 107–188, title IV, §403(4), June 12, 2002, 116 Stat. 687.)

AMENDMENTS

2002—Subsec. (b). Pub. L. 107–188, §403(4)(A), which directed substitution of "this subsection" for "this subparagraph", was executed by making the substitution in three places to reflect the probable intent of Congress.

Subsec. (d). Pub. L. 107–188, §403(4)(B), amended subsec. (d) generally, substituting provisions relating to authorization of appropriations to carry out subsec. (b) in fiscal year 2002 and subsequent fiscal years for provisions relating to authorization of appropriations to carry out this section in fiscal year 1991 and earlier.

1996—Subsec. (a)(2). Pub. L. 104–182, §121(4)(A), added heading and text of par. (2) and struck out former par. (2) which read as follows: "(2)(A) The Administrator shall, to the maximum extent feasible, provide technical assistance to the States and municipalities in the establishment and administration of public water system supervision programs (as defined in section 300j–2(c)(1) of this title)."

Subsec. (a)(2)(B). Pub. L. 104–182, §121(3), redesignated subpar. (B) as subsec. (b) and transferred that subsec. to appear after subsec. (a).

Subsec. (a)(3), (11). Pub. L. 104–182, §121(4)(B), (C), redesignated par. (11) as (3), transferred that par. to appear before par. (4), and struck out former par. (3) which provided that the Administrator was to conduct studies, and make periodic reports to Congress, on the costs of carrying out regulations prescribed under section 300g–1 of this title.

Subsec. (b). Pub. L. 104–182, §121(2), (3), redesignated subsec. (a)(2)(B) as subsec. (b), transferred that subsec. to appear after subsec. (a), and struck out former subsec. (b) which read as follows: "In carrying out this subchapter, the Administrator is authorized to—

"(1) collect and make available information pertaining to research, investigations, and demonstrations with respect to providing a dependably safe supply of drinking water together with appropriate recommendations in connection therewith;

"(2) make available research facilities of the Agency to appropriate public authorities, institutions, and individuals engaged in studies and research relating to the purposes of this subchapter;".

Subsecs. (b)(3), (c)(3). Pub. L. 104–182, §121(1), which directed redesignation of subsec. (b)(3) as par. (3) of subsec. (d) and transfer of that par. to follow par. (2) of subsec. (d), was executed by redesignating subsec. (b)(3) as par. (3) of subsec. (c) and transferring that par. to follow par. (2) of subsec. (c) to reflect the probable intent of Congress and the redesignation of subsec. (d) as (c) by Pub. L. 104–66. See 1995 Amendment note below. Moreover, subsec. (d) does not have any pars.

Subsec. (e). Pub. L. 104–182, §122, amended subsec. (e) generally. Prior to amendment, subsec. (e) read as follows: "The Administrator is authorized to provide technical assistance to small public water systems to enable such systems to achieve and maintain compliance with national drinking water regulations. Such assistance may include 'circuit-rider' programs, training, and preliminary engineering studies. There are authorized to be appropriated to carry out this subsection $10,000,000 for each of the fiscal years 1987 through 1991. Not less than the greater of—

"(1) 3 percent of the amounts appropriated under this subsection, or

"(2) $280,000

shall be utilized for technical assistance to public water systems owned or operated by Indian tribes."

1995—Subsecs. (c) to (g). Pub. L. 104–66 redesignated subsecs. (d), (f), and (g) as (c), (d), and (e), respectively, and struck out former subsec. (c) which read as follows: "Not later than eighteen months after November 16, 1977, the Administrator shall submit a report to Congress on the present and projected future availability of an adequate and dependable supply of safe drinking water to meet present and projected future need. Such report shall include an analysis of the future demand for drinking water and other competing uses of water, the availability and use of methods to conserve water or reduce demand, the adequacy of present measures to assure adequate and dependable supplies of safe drinking water, and the problems (financial, legal, or other) which need to be resolved in order to assure the availability of such supplies for the future. Existing information and data complied by the National Water Commission and others shall be utilized to the extent possible."

1986—Subsec. (e). Pub. L. 99–339, §304(a), struck out subsec. (e) which authorized the Administrator to make grants to public water systems which are required, under State or local law, to meet standards relating to drinking turbidity which are more stringent than the standards in effect under this subchapter.

Subsec. (f). Pub. L. 99–339, §301(a), authorized appropriations to carry out subsec. (a)(2)(B) of this section for fiscal years 1987 to 1991 and to carry out provisions of this section other than subsecs. (a)(2)(B) and (g) and provisions relating to research for fiscal years 1987 to 1991.

Subsec. (g). Pub. L. 99–339, §301(g), authorized appropriations to carry out this subsection of $10,000,000 for each of fiscal years 1987 through 1991 and specified amount to be utilized for public water systems owned or operated by Indian tribes.

Pub. L. 99–339, §107 added subsec. (g).

1980—Subsecs. (e), (f). Pub. L. 96–502 added subsec. (e) and redesignated former subsec. (e) as (f).

1979—Subsec. (e). Pub. L. 96–63 authorized appropriations of $21,405,000 for fiscal year ending Sept. 30, 1980, $30,000,000 for fiscal year ending Sept. 30, 1981, and $35,000,000 for fiscal year ending Sept. 30, 1982 for purposes other than those of subsec. (a)(2)(B) of this sec-

tion and for purposes of subsec. (a)(2)(B) of this section, $8,000,000 for fiscal years 1980 through 1982.

1977—Subsec. (a)(2). Pub. L. 95–190, §§9, 13, designated existing provisions as subpar. (A), added subpar. (B) and, in subpar. (B) as added, substituted provisions authorizing Administrator to make grants and provide technical assistance for any emergency situation affecting public water systems and criteria for such grants and assistance for provisions authorizing Administrator to make grants and provide technical assistance for any emergency situation respecting drinking water and criteria for determination of such situations.

Subsec. (a)(3). Pub. L. 95–190, §3(a), designated existing provisions as subpar. (A) and added subpar. (B).

Subsec. (a)(10), (11). Pub. L. 95–190, §3(e)(1), added pars. (10) and (11).

Subsec. (b)(3)(C). Pub. L. 95–190, §10(b), substituted "300j–2(c)" for "300j–2(d)".

Subsecs. (c), (d). Pub. L. 95–190, §§3(b), 4, added subsecs. (c) and (d). Former subsec. (c) redesignated (e).

Subsec. (e). Pub. L. 95–190, §§2(a), 3(b), redesignated former subsec. (c) as (e) and inserted provisions authorizing appropriations for fiscal years 1978 and 1979, and provisions relating to appropriations for subsec. (a)(2)(B) of this section and for research.

SCIENTIFIC RESEARCH REVIEW

Section 202 of Pub. L. 104–182 provided that:

"(a) IN GENERAL.—The Administrator shall—

"(1) develop a strategic plan for drinking water research activities throughout the Environmental Protection Agency (in this section referred to as the 'Agency');

"(2) integrate that strategic plan into ongoing Agency planning activities; and

"(3) review all Agency drinking water research to ensure the research—

"(A) is of high quality; and

"(B) does not duplicate any other research being conducted by the Agency.

"(b) PLAN.—The Administrator shall transmit the plan to the Committees on Commerce and Science of the House of Representatives and the Committee on Environment and Public Works of the Senate and the plan shall be made available to the public."

NATIONAL CENTER FOR GROUND WATER RESEARCH

Section 203 of Pub. L. 104–182 provided that: "The Administrator of the Environmental Protection Agency, acting through the Robert S. Kerr Environmental Research Laboratory, is authorized to reestablish a partnership between the Laboratory and the National Center for Ground Water Research, a university consortium, to conduct research, training, and technology transfer for ground water quality protection and restoration. No funds are authorized by this section."

COMPARATIVE HEALTH EFFECTS ASSESSMENT

Section 304(b) of Pub. L. 99–339 provided that: "The Administrator of the Environmental Protection Agency shall conduct a comparative health effects assessment, using available data, to compare the public health effects (both positive and negative) associated with water treatment chemicals and their byproducts to the public health effects associated with contaminants found in public water supplies. Not later than 18 months after the date of the enactment of this Act [June 19, 1986], the Administrator shall submit a report to the Congress setting forth the results of such assessment."

§ 300j–2. Grants for State programs

(a) Public water systems supervision programs; applications for grants; allotment of sums; waiver of grant restrictions; notice of approval or disapproval of application; authorization of appropriations

(1) From allotments made pursuant to paragraph (4), the Administrator may make grants to States to carry out public water system supervision programs.

(2) No grant may be made under paragraph (1) unless an application therefor has been submitted to the Administrator in such form and manner as he may require. The Administrator may not approve an application of a State for its first grant under paragraph (1) unless he determines that the State—

(A) has established or will establish within one year from the date of such grant a public water system supervision program, and

(B) will, within that one year, assume primary enforcement responsibility for public water systems within the State.

No grant may be made to a State under paragraph (1) for any period beginning more than one year after the date of the State's first grant unless the State has assumed and maintains primary enforcement responsibility for public water systems within the State. The prohibitions contained in the preceding two sentences shall not apply to such grants when made to Indian Tribes.

(3) A grant under paragraph (1) shall be made to cover not more than 75 per centum of the grant recipient's costs (as determined under regulations of the Administrator) in carrying out, during the one-year period beginning on the date the grant is made, a public water system supervision program.

(4) In each fiscal year the Administrator shall, in accordance, with regulations, allot the sums appropriated for such year under paragraph (5) among the States on the basis of population, geographical area, number of public water systems, and other relevant factors. No State shall receive less than 1 per centum of the annual appropriation for grants under paragraph (1): *Provided*, That the Administrator may, by regulation, reduce such percentage in accordance with the criteria specified in this paragraph: *And provided further*, That such percentage shall not apply to grants allotted to Guam, American Samoa, or the Virgin Islands.

(5) The prohibition contained in the last sentence of paragraph (2) may be waived by the Administrator with respect to a grant to a State through fiscal year 1979 but such prohibition may only be waived if, in the judgment of the Administrator—

(A) the State is making a diligent effort to assume and maintain primary enforcement responsibility for public water systems within the State;

(B) the State has made significant progress toward assuming and maintaining such primary enforcement responsibility; and

(C) there is reason to believe the State will assume such primary enforcement responsibility by October 1, 1979.

The amount of any grant awarded for the fiscal years 1978 and 1979 pursuant to a waiver under this paragraph may not exceed 75 per centum of the allotment which the State would have received for such fiscal year if it had assumed and maintained such primary enforcement responsibility. The remaining 25 per centum of the amount allotted to such State for such fiscal year shall be retained by the Administrator, and

the Administrator may award such amount to such State at such time as the State assumes such responsibility before the beginning of fiscal year 1980. At the beginning of each fiscal years 1979 and 1980 the amounts retained by the Administrator for any preceding fiscal year and not awarded by the beginning of fiscal year 1979 or 1980 to the States to which such amounts were originally allotted may be removed from the original allotment and reallotted for fiscal year 1979 or 1980 (as the case may be) to States which have assumed primary enforcement responsibility by the beginning of such fiscal year.

(6) The Administrator shall notify the State of the approval or disapproval of any application for a grant under this section—

(A) within ninety days after receipt of such application, or

(B) not later than the first day of the fiscal year for which the grant application is made,

whichever is later.

(7) AUTHORIZATION.—For the purpose of making grants under paragraph (1), there are authorized to be appropriated $100,000,000 for each of fiscal years 1997 through 2003.

(8) RESERVATION OF FUNDS BY THE ADMINISTRATOR.—If the Administrator assumes the primary enforcement responsibility of a State public water system supervision program, the Administrator may reserve from funds made available pursuant to this subsection an amount equal to the amount that would otherwise have been provided to the State pursuant to this subsection. The Administrator shall use the funds reserved pursuant to this paragraph to ensure the full and effective administration of a public water system supervision program in the State.

(9) STATE LOAN FUNDS.—

(A) RESERVATION OF FUNDS.—For any fiscal year for which the amount made available to the Administrator by appropriations to carry out this subsection is less than the amount that the Administrator determines is necessary to supplement funds made available pursuant to paragraph (8) to ensure the full and effective administration of a public water system supervision program in a State, the Administrator may reserve from the funds made available to the State under section 300j–12 of this title (relating to State loan funds) an amount that is equal to the amount of the shortfall. This paragraph shall not apply to any State not exercising primary enforcement responsibility for public water systems as of August 6, 1996.

(B) DUTY OF ADMINISTRATOR.—If the Administrator reserves funds from the allocation of a State under subparagraph (A), the Administrator shall carry out in the State each of the activities that would be required of the State if the State had primary enforcement authority under section 300g–2 of this title.

(b) Underground water source protection programs; applications for grants; allotment of sums; authorization of appropriations

(1) From allotments made pursuant to paragraph (4), the Administrator may make grants to States to carry out underground water source protection programs.

(2) No grant may be made under paragraph (1) unless an application therefor has been submitted to the Administrator in such form and manner as he may require. No grant may be made to any State under paragraph (1) unless the State has assumed primary enforcement responsibility within two years after the date the Administrator promulgates regulations for State underground injection control programs under section 300h of this title. The prohibition contained in the preceding sentence shall not apply to such grants when made to Indian Tribes.

(3) A grant under paragraph (1) shall be made to cover not more than 75 per centum of the grant recipient's cost (as determined under regulations of the Administrator) in carrying out, during the one-year period beginning on the date the grant is made, and underground water source protection program.

(4) In each fiscal year the Administrator shall, in accordance with regulations, allot the sums appropriated for such year under paragraph (5) among the States on the basis of population, geographical area, and other relevant factors.

(5) For purposes of making grants under paragraph (1) there are authorized to be appropriated $5,000,000 for the fiscal year ending June 30, 1976, $7,500,000 for the fiscal year ending June 30, 1977, $10,000,000 for each of the fiscal years 1978 and 1979, $7,795,000 for the fiscal year ending September 30, 1980, $18,000,000 for the fiscal year ending September 30, 1981, and $21,000,000 for the fiscal year ending September 30, 1982. For the purpose of making grants under paragraph (1) there are authorized to be appropriated not more than the following amounts:

Fiscal year:	*Amount*
1987	$19,700,000
1988	19,700,000
1989	20,850,000
1990	20,850,000
1991	20,850,000
1992–2003	15,000,000.

(c) Definitions

For purposes of this section:

(1) The term ''public water system supervision program'' means a program for the adoption and enforcement of drinking water regulations (with such variances and exemptions from such regulations under conditions and in a manner which is not less stringent than the conditions under, and the manner in, which variances and exemptions may be granted under sections 300g–4 and 300g–5 of this title) which are no less stringent than the national primary drinking water regulations under section 300g–1 of this title, and for keeping records and making reports required by section 300g–2(a)(3) of this title.

(2) The term ''underground water source protection program'' means a program for the adoption and enforcement of a program which meets the requirements of regulations under section 300h of this title, and for keeping records and making reports required by section 300h–1(b)(1)(A)(ii) of this title. Such term includes, where applicable, a program which meets the requirements of section 300h–4 of this title.

(d) New York City watershed protection program

(1) In general

The Administrator is authorized to provide financial assistance to the State of New York

for demonstration projects implemented as part of the watershed program for the protection and enhancement of the quality of source waters of the New York City water supply system, including projects that demonstrate, assess, or provide for comprehensive monitoring and surveillance and projects necessary to comply with the criteria for avoiding filtration contained in 40 CFR 141.71. Demonstration projects which shall be eligible for financial assistance shall be certified to the Administrator by the State of New York as satisfying the purposes of this subsection. In certifying projects to the Administrator, the State of New York shall give priority to monitoring projects that have undergone peer review.

(2) Report

Not later than 5 years after the date on which the Administrator first provides assistance pursuant to this paragraph, the Governor of the State of New York shall submit a report to the Administrator on the results of projects assisted.

(3) Matching requirements

Federal assistance provided under this subsection shall not exceed 50 percent of the total cost of the protection program being carried out for any particular watershed or ground water recharge area.

(4) Authorization

There are authorized to be appropriated to the Administrator to carry out this subsection for each of fiscal years 2003 through 2010, $15,000,000 for the purpose of providing assistance to the State of New York to carry out paragraph (1).

(July 1, 1944, ch. 373, title XIV, § 1443, as added Pub. L. 93–523, § 2(a), Dec. 16, 1974, 88 Stat. 1684; amended Pub. L. 95–190, §§ 2(b), (c), 5(a), Nov. 16, 1977, 91 Stat. 1393, 1395; Pub. L. 96–63, § 2, Sept. 6, 1979, 93 Stat. 411; Pub. L. 96–502, §§ 2(c), 4(d), Dec. 5, 1980, 94 Stat. 2738; Pub. L. 99–339, title III, §§ 301(b), (c), 302(d), June 19, 1986, 100 Stat. 664, 666; Pub. L. 104–182, title I, §§ 120(c), 124, 128, Aug. 6, 1996, 110 Stat. 1651, 1653, 1659; Pub. L. 108–328, § 1, Oct. 16, 2004, 118 Stat. 1273.)

AMENDMENTS

2004—Subsec. (d)(4). Pub. L. 108–328 substituted "2003 through 2010" for "1997 through 2003".

1996—Subsec. (a)(7). Pub. L. 104–182, § 124(1), inserted heading and amended text generally. Prior to amendment, text read as follows: "For purposes of making grants under paragraph (1) there are authorized to be appropriated $15,000,000 for the fiscal year ending June 30, 1976, $25,000,000 for the fiscal year ending June 30, 1977, $35,000,000 for fiscal year 1978, $45,000,000 for fiscal year 1979, $29,450,000 for the fiscal year ending September 30, 1980, $32,000,000 for the fiscal year ending September 30, 1981, and $34,000,000 for the fiscal year ending September 30, 1982. For the purposes of making grants under paragraph (1) there are authorized to be appropriated not more than the following amounts:

"Fiscal year:	*Amount*
1987	$37,200,000
1988	37,200,000
1989	40,150,000
1990	40,150,000
1991	40,150,000".

Subsec. (a)(8), (9). Pub. L. 104–182, § 124(2), added pars. (8) and (9).

Subsec. (b)(5). Pub. L. 104–182, § 120(c), inserted table item relating to fiscal years 1992 through 2003.

Subsec. (d). Pub. L. 104–182, § 128, added subsec. (d).

1986—Subsec. (a)(2). Pub. L. 99–339, § 302(d)(1), inserted provision that prohibitions contained in preceding two sentences not apply to such grants when made to Indian Tribes.

Subsec. (a)(7). Pub. L. 99–339, § 301(b), authorized appropriations for grants under par. (1) of not more than $37,200,000 for fiscal years 1987 and 1988 and of not more than $40,150,000 for fiscal years 1989 to 1991.

Subsec. (b)(2). Pub. L. 99–339, § 302(d)(2), inserted provision that prohibition contained in preceding sentence not apply to such grants when made to Indian Tribes.

Subsec. (b)(5). Pub. L. 99–339, § 301(c), authorized appropriations for grants under par. (1) of not more than $19,700,000 for fiscal years 1987 and 1988 and of not more than $20,850,000 for fiscal years 1989 to 1991.

1980—Subsec. (b)(2). Pub. L. 96–502, § 4(d), substituted provisions that no grant may be made to any State under par. (1) unless the State has assumed primary enforcement responsibility within two years after the date the Administrator promulgates regulations for State underground injection control programs under section 300h of this title for provisions that the Administrator may not approve an application of a State for its first grant under par. (1) unless he determines that the State has established or will establish within two years from the date of such grant an underground water source protection, and will, within such two years, assume primary enforcement responsibility for underground water sources within the State and that no grant may be made to a State under par. (1) for any period beginning more than two years after the date of the State's first grant unless the State has assumed and maintains primary enforcement responsibility for underground water sources within the State.

Subsec. (c)(2). Pub. L. 96–502, § 2(c), inserted provision that such term includes, where applicable, a program which meets requirements of section 300h–4 of this title.

1979—Subsec. (a)(7). Pub. L. 96–63, § 2(a), authorized appropriation of $29,450,000, $32,000,000, and $34,000,000 for fiscal years ending Sept. 30, 1980, through 1982, respectively.

Subsec. (b)(5). Pub. L. 96–63, § 2(b), authorized appropriation of $7,795,000, $18,000,000, and $21,000,000 for fiscal years ending Sept. 30, 1980, through 1982, respectively.

1977—Subsec. (a)(5), (6). Pub. L. 95–190, § 5(a), added pars. (5) and (6). Former par. (5) redesignated (7).

Subsec. (a)(7). Pub. L. 95–190, §§ 2(b), 5(a), redesignated former par. (5) as (7) and authorized appropriations for fiscal years 1978 and 1979.

Subsec. (b)(5). Pub. L. 95–190, § 2(c), inserted provisions authorizing appropriations for fiscal years 1978 and 1979.

§ 300j–3. Special project grants and guaranteed loans

(a) Special study and demonstration project grants

The Administrator may make grants to any person for the purposes of—

(1) assisting in the development and demonstration (including construction) of any project which will demonstrate a new or improved method, approach, or technology, for providing a dependably safe supply of drinking water to the public; and

(2) assisting in the development and demonstration (including construction) of any project which will investigate and demonstrate health implications involved in the reclamation, recycling, and reuse of waste waters for drinking and the processes and methods for the preparation of safe and acceptable drinking water.

(b) Limitations

Grants made by the Administrator under this section shall be subject to the following limitations:

(1) Grants under this section shall not exceed 66⅔ per centum of the total cost of construction of any facility and 75 per centum of any other costs, as determined by the Administrator.

(2) Grants under this section shall not be made for any project involving the construction or modification of any facilities for any public water system in a State unless such project has been approved by the State agency charged with the responsibility for safety of drinking water (or if there is no such agency in a State, by the State health authority).

(3) Grants under this section shall not be made for any project unless the Administrator determines, after consulting the National Drinking Water Advisory Council, that such project will serve a useful purpose relating to the development and demonstration of new or improved techniques, methods, or technologies for the provision of safe water to the public for drinking.

(4) Priority for grants under this section shall be given where there are known or potential public health hazards which require advanced technology for the removal of particles which are too small to be removed by ordinary treatment technology.

(c) Authorization of appropriations

For the purposes of making grants under subsections (a) and (b) of this section there are authorized to be appropriated $7,500,000 for the fiscal year ending June 30, 1975; and $7,500,000 for the fiscal year ending June 30, 1976; and $10,000,000 for the fiscal year ending June 30, 1977.

(d) Loan guarantees to public water systems; conditions; indebtedness limitation; regulations

The Administrator during the fiscal years ending June 30, 1975, and June 30, 1976, shall carry out a program of guaranteeing loans made by private lenders to small public water systems for the purpose of enabling such systems to meet national primary drinking water regulations prescribed under section 300g–1 of this title. No such guarantee may be made with respect to a system unless (1) such system cannot reasonably obtain financial assistance necessary to comply with such regulations from any other source, and (2) the Administrator determines that any facilities constructed with a loan guaranteed under this subsection is not likely to be made obsolete by subsequent changes in primary regulations. The aggregate amount of indebtedness guaranteed with respect to any system may not exceed $50,000. The aggregate amount of indebtedness guaranteed under this subsection may not exceed $50,000,000. The Administrator shall prescribe regulations to carry out this subsection.

(July 1, 1944, ch. 373, title XIV, §1444, as added Pub. L. 93–523, §2(a), Dec. 16, 1974, 88 Stat. 1685; amended Pub. L. 99–339, title I, §101(c)(3), June 19, 1986, 100 Stat. 646.)

AMENDMENTS

1986—Subsec. (d). Pub. L. 99–339 struck out "(including interim regulations)" before "prescribed" in first sentence.

§ 300j–3a. Grants to public sector agencies

(a) Assistance for development and demonstration projects

The Administrator of the Environmental Protection Agency shall offer grants to public sector agencies for the purposes of—

(1) assisting in the development and demonstration (including construction) of any project which will demonstrate a new or improved method, approach, or technology for providing a dependably safe supply of drinking water to the public; and

(2) assisting in the development and demonstration (including construction) of any project which will investigate and demonstrate health and conservation implications involved in the reclamation, recycling, and reuse of wastewaters for drinking and agricultural use or the processes and methods for the preparation of safe and acceptable drinking water.

(b) Limitations

Grants made by the Administrator under this section shall be subject to the following limitations:

(1) Grants under this section shall not exceed 66⅔ per centum of the total cost of construction of any facility and 75 per centum of any other costs, as determined by the Administrator.

(2) Grants under this section shall not be made for any project involving the construction or modification of any facilities for any public water system in a State unless such project has been approved by the State agency charged with the responsibility for safety of drinking water (or if there is no such agency in a State, by the State health authority).

(3) Grants under this section shall not be made for any project unless the Administrator determines, after consultation, that such project will serve a useful purpose relating to the development and demonstration of new or improved techniques, methods, or technologies for the provision of safe water to the public for drinking.

(c) Authorization of appropriations

There are authorized to be appropriated for the purposes of this section $25,000,000 for fiscal year 1978.

(Pub. L. 95–155, §5, Nov. 8, 1977, 91 Stat. 1258; Pub. L. 95–477, §7(a)(1), Oct. 18, 1978, 92 Stat. 1511.)

CODIFICATION

Section was enacted as part of the Environmental Research, Development, and Demonstration Authorization Act of 1978, and not as part of the Public Health Service Act which comprises this chapter.

AMENDMENTS

1978—Subsec. (a)(2). Pub. L. 95–477 inserted "agricultural use or" after "drinking and".

EFFECTIVE DATE OF 1978 AMENDMENT

Section 7(a)(2) of Pub. L. 95–477 provided that: "This subsection [amending this section] shall become effective October 1, 1978."

§ 300j–3b. Contaminant standards or treatment technique guidelines

(1) Not later than nine months after October 18, 1978, the Administrator shall promulgate guidelines establishing supplemental standards or treatment technique requirements for microbiological, viral, radiological, organic, and inorganic contaminants, which guidelines shall be conditions, as provided in paragraph (2), of any grant for a demonstration project for water reclamation, recycling, and reuse funded under section 300j–3a of this title or under section 300j–3(a)(2) of this title, where such project involves direct human consumption of treated wastewater. Such guidelines shall provide for sufficient control of each such contaminant, such that in the Administrator's judgement, no adverse effects on the health of persons may reasonably be anticipated to occur, allowing an adequate margin of safety.

(2) A grant referred to in paragraph (1) for a project which involves direct human consumption of treated wastewater may be awarded on or after the date of promulgation of guidelines under this section only if the applicant demonstrates to the satisfaction of the Administrator that the project—

(A) will comply with all national primary drinking water regulations under section 300g–1 of this title;

(B) will comply with all guidelines under this section; and

(C) will in other respects provide safe drinking water.

Any such grant awarded before the date of promulgation of such guidelines shall be conditioned on the applicant's agreement to comply to the maximum feasible extent with such guidelines as expeditiously as practicable following the date of promulgation thereof.

(3) Guidelines under this section may, in the discretion of the Administrator—

(A) be nationally and uniformly applicable to all projects funded under section 300j–3a of this title or section 300j–1(a)(2)[1] of this title;

(B) vary for different classes or categories of such projects (as determined by the Administrator);

(C) be established and applicable on a project-by-project basis; or

(D) any combination of the above.

(4) Nothing in this section shall be construed to prohibit or delay the award of any grant referred to in paragraph (1) prior to the date of promulgation of such guidelines.

(Pub. L. 95–477, § 7(b), Oct. 18, 1978, 92 Stat. 1511.)

REFERENCES IN TEXT

Section 300j–1(a)(2) of this title, referred to in par. (3)(A), was amended by Pub. L. 104–182, title I, § 121(3), (4)(A), Aug. 6, 1996, 110 Stat. 1651, to redesignate par. (2)(B) as subsec. (b) of section 300j–1, strike par. (2)(A), and add a new par. (2) relating to information and research facilities.

[1] See References in Text note below.

CODIFICATION

Section was enacted as part of the Environmental Research, Development, and Demonstration Authorization Act of 1979, and not as part of the Public Health Service Act which comprises this chapter.

§ 300j–3c. National assistance program for water infrastructure and watersheds

(a) Technical and financial assistance

The Administrator of the Environmental Protection Agency may provide technical and financial assistance in the form of grants to States (1) for the construction, rehabilitation, and improvement of water supply systems, and (2) consistent with nonpoint source management programs established under section 1329 of title 33, for source water quality protection programs to address pollutants in navigable waters for the purpose of making such waters usable by water supply systems.

(b) Limitation

Not more than 30 percent of the amounts appropriated to carry out this section in a fiscal year may be used for source water quality protection programs described in subsection (a)(2) of this section.

(c) Condition

As a condition to receiving assistance under this section, a State shall ensure that such assistance is carried out in the most cost-effective manner, as determined by the State.

(d) Authorization of appropriations

(1) Unconditional authorization

There are authorized to be appropriated to carry out this section $25,000,000 for each of fiscal years 1997 through 2003. Such sums shall remain available until expended.

(2) Conditional authorization

In addition to amounts authorized under paragraph (1), there are authorized to be appropriated to carry out this section $25,000,000 for each of fiscal years 1997 through 2003, provided that such authorization shall be in effect for a fiscal year only if at least 75 percent of the total amount of funds authorized to be appropriated for such fiscal year by section 300j–12(m) of this title are appropriated.

(e) Acquisition of lands

Assistance provided with funds made available under this section may be used for the acquisition of lands and other interests in lands; however, nothing in this section authorizes the acquisition of lands or other interests in lands from other than willing sellers.

(f) Federal share

The Federal share of the cost of activities for which grants are made under this section shall be 50 percent.

(g) Definitions

In this section, the following definitions apply:

(1) State

The term "State" means a State, the District of Columbia, the Commonwealth of Puerto Rico, the Virgin Islands, Guam, American

Samoa, and the Commonwealth of the Northern Mariana Islands.

(2) Water supply system

The term ''water supply system'' means a system for the provision to the public of piped water for human consumption if such system has at least 15 service connections or regularly serves at least 25 individuals and a draw and fill system for the provision to the public of water for human consumption. Such term does not include a system owned by a Federal agency. Such term includes (A) any collection, treatment, storage, and distribution facilities under control of the operator of such system and used primarily in connection with such system, and (B) any collection or pretreatment facilities not under such control that are used primarily in connection with such system.

(Pub. L. 104–182, title IV, § 401, Aug. 6, 1996, 110 Stat. 1690.)

CODIFICATION

Section was enacted as part of the Safe Drinking Water Act Amendments of 1996, and not as part of the Public Health Service Act which comprises this chapter.

§ 300j–4. Records and inspections

(a) Provision of information to Administrator; monitoring program for unregulated contaminants

(1)(A) Every person who is subject to any requirement of this subchapter or who is a grantee, shall establish and maintain such records, make such reports, conduct such monitoring, and provide such information as the Administrator may reasonably require by regulation to assist the Administrator in establishing regulations under this subchapter, in determining whether such person has acted or is acting in compliance with this subchapter, in administering any program of financial assistance under this subchapter, in evaluating the health risks of unregulated contaminants, or in advising the public of such risks. In requiring a public water system to monitor under this subsection, the Administrator may take into consideration the system size and the contaminants likely to be found in the system's drinking water.

(B) Every person who is subject to a national primary drinking water regulation under section 300g–1 of this title shall provide such information as the Administrator may reasonably require, after consultation with the State in which such person is located if such State has primary enforcement responsibility for public water systems, on a case-by-case basis, to determine whether such person has acted or is acting in compliance with this subchapter.

(C) Every person who is subject to a national primary drinking water regulation under section 300g–1 of this title shall provide such information as the Administrator may reasonably require to assist the Administrator in establishing regulations under section 300g–1 of this title, after consultation with States and suppliers of water. The Administrator may not require under this subparagraph the installation of treatment equipment or process changes, the testing of treatment technology, or the analysis or processing of monitoring samples, except where the Administrator provides the funding for such activities. Before exercising this authority, the Administrator shall first seek to obtain the information by voluntary submission.

(D) The Administrator shall not later than 2 years after August 6, 1996, after consultation with public health experts, representatives of the general public, and officials of State and local governments, review the monitoring requirements for not fewer than 12 contaminants identified by the Administrator, and promulgate any necessary modifications.

(2) MONITORING PROGRAM FOR UNREGULATED CONTAMINANTS.—

(A) ESTABLISHMENT.—The Administrator shall promulgate regulations establishing the criteria for a monitoring program for unregulated contaminants. The regulations shall require monitoring of drinking water supplied by public water systems and shall vary the frequency and schedule for monitoring requirements for systems based on the number of persons served by the system, the source of supply, and the contaminants likely to be found, ensuring that only a representative sample of systems serving 10,000 persons or fewer are required to monitor.

(B) MONITORING PROGRAM FOR CERTAIN UNREGULATED CONTAMINANTS.—

(i) INITIAL LIST.—Not later than 3 years after August 6, 1996, and every 5 years thereafter, the Administrator shall issue a list pursuant to subparagraph (A) of not more than 30 unregulated contaminants to be monitored by public water systems and to be included in the national drinking water occurrence data base maintained pursuant to subsection (g) of this section.

(ii) GOVERNORS' PETITION.—The Administrator shall include among the list of contaminants for which monitoring is required under this paragraph each contaminant recommended in a petition signed by the Governor of each of 7 or more States, unless the Administrator determines that the action would prevent the listing of other contaminants of a higher public health concern.

(C) MONITORING PLAN FOR SMALL AND MEDIUM SYSTEMS.—

(i) IN GENERAL.—Based on the regulations promulgated by the Administrator, each State may develop a representative monitoring plan to assess the occurrence of unregulated contaminants in public water systems that serve a population of 10,000 or fewer in that State. The plan shall require monitoring for systems representative of different sizes, types, and geographic locations in the State.

(ii) GRANTS FOR SMALL SYSTEM COSTS.—From funds reserved under section 300j–12(*o*) of this title or appropriated under subparagraph (H), the Administrator shall pay the reasonable cost of such testing and laboratory analysis as are necessary to carry out monitoring under the plan.

(D) MONITORING RESULTS.—Each public water system that conducts monitoring of unregu-

lated contaminants pursuant to this paragraph shall provide the results of the monitoring to the primary enforcement authority for the system.

(E) NOTIFICATION.—Notification of the availability of the results of monitoring programs required under paragraph (2)(A) shall be given to the persons served by the system.

(F) WAIVER OF MONITORING REQUIREMENT.—The Administrator shall waive the requirement for monitoring for a contaminant under this paragraph in a State, if the State demonstrates that the criteria for listing the contaminant do not apply in that State.

(G) ANALYTICAL METHODS.—The State may use screening methods approved by the Administrator under subsection (i) of this section in lieu of monitoring for particular contaminants under this paragraph.

(H) AUTHORIZATION OF APPROPRIATIONS.—There are authorized to be appropriated to carry out this paragraph $10,000,000 for each of the fiscal years 1997 through 2003.

(b) Entry of establishments, facilities, or other property; inspections; conduct of certain tests; audit and examination of records; entry restrictions; prohibition against informing of a proposed entry

(1) Except as provided in paragraph (2), the Administrator, or representatives of the Administrator duly designated by him, upon presenting appropriate credentials and a written notice to any supplier of water or other person subject to (A) a national primary drinking water regulation prescribed under section 300g–1 of this title, (B) an applicable underground injection control program, or (C) any requirement to monitor an unregulated contaminant pursuant to subsection (a) of this section, or person in charge of any of the property of such supplier or other person referred to in clause (A), (B), or (C), is authorized to enter any establishment, facility, or other property of such supplier or other person in order to determine whether such supplier or other person has acted or is acting in compliance with this subchapter, including for this purpose, inspection, at reasonable times, of records, files, papers, processes, controls, and facilities, or in order to test any feature of a public water system, including its raw water source. The Administrator or the Comptroller General (or any representative designated by either) shall have access for the purpose of audit and examination to any records, reports, or information of a grantee which are required to be maintained under subsection (a) of this section or which are pertinent to any financial assistance under this subchapter.

(2) No entry may be made under the first sentence of paragraph (1) in an establishment, facility, or other property of a supplier of water or other person subject to a national primary drinking water regulation if the establishment, facility, or other property is located in a State which has primary enforcement responsibility for public water systems unless, before written notice of such entry is made, the Administrator (or his representative) notifies the State agency charged with responsibility for safe drinking water of the reasons for such entry. The Administrator shall, upon a showing by the State agency that such an entry will be detrimental to the administration of the State's program of primary enforcement responsibility, take such showing into consideration in determining whether to make such entry. No State agency which receives notice under this paragraph of an entry proposed to be made under paragraph (1) may use the information contained in the notice to inform the person whose property is proposed to be entered of the proposed entry; and if a State agency so uses such information, notice to the agency under this paragraph is not required until such time as the Administrator determines the agency has provided him satisfactory assurances that it will no longer so use information contained in a notice under this paragraph.

(c) Penalty

Whoever fails or refuses to comply with any requirement of subsection (a) of this section or to allow the Administrator, the Comptroller General, or representatives of either, to enter and conduct any audit or inspection authorized by subsection (b) of this section shall be subject to a civil penalty of not to exceed $25,000.

(d) Confidential information; trade secrets and secret processes; information disclosure; "information required under this section" defined

(1) Subject to paragraph (2), upon a showing satisfactory to the Administrator by any person that any information required under this section from such person, if made public, would divulge trade secrets or secret processes of such person, the Administrator shall consider such information confidential in accordance with the purposes of section 1905 of title 18. If the applicant fails to make a showing satisfactory to the Administrator, the Administrator shall give such applicant thirty days' notice before releasing the information to which the application relates (unless the public health or safety requires an earlier release of such information).

(2) Any information required under this section (A) may be disclosed to other officers, employees, or authorized representatives of the United States concerned with carrying out this subchapter or to committees of the Congress, or when relevant in any proceeding under this subchapter, and (B) shall be disclosed to the extent it deals with the level of contaminants in drinking water. For purposes of this subsection the term "information required under this section" means any papers, books, documents, or information, or any particular part thereof, reported to or otherwise obtained by the Administrator under this section.

(e) "Grantee" and "person" defined

For purposes of this section, (1) the term "grantee" means any person who applies for or receives financial assistance, by grant, contract, or loan guarantee under this subchapter, and (2) the term "person" includes a Federal agency.

(f) Information regarding drinking water coolers

The Administrator may utilize the authorities of this section for purposes of part F of this subchapter. Any person who manufactures, imports, sells, or distributes drinking water coolers in

interstate commerce shall be treated as a supplier of water for purposes of applying the provisions of this section in the case of persons subject to part F of this subchapter.

(g) Occurrence data base

(1) In general

Not later than 3 years after August 6, 1996, the Administrator shall assemble and maintain a national drinking water contaminant occurrence data base, using information on the occurrence of both regulated and unregulated contaminants in public water systems obtained under subsection (a)(1)(A) of this section or subsection (a)(2) of this section and reliable information from other public and private sources.

(2) Public input

In establishing the occurrence data base, the Administrator shall solicit recommendations from the Science Advisory Board, the States, and other interested parties concerning the development and maintenance of a national drinking water contaminant occurrence data base, including such issues as the structure and design of the data base, data input parameters and requirements, and the use and interpretation of data.

(3) Use

The data shall be used by the Administrator in making determinations under section 300g–1(b)(1) of this title with respect to the occurrence of a contaminant in drinking water at a level of public health concern.

(4) Public recommendations

The Administrator shall periodically solicit recommendations from the appropriate officials of the National Academy of Sciences and the States, and any person may submit recommendations to the Administrator, with respect to contaminants that should be included in the national drinking water contaminant occurrence data base, including recommendations with respect to additional unregulated contaminants that should be listed under subsection (a)(2) of this section. Any recommendation submitted under this clause shall be accompanied by reasonable documentation that—

(A) the contaminant occurs or is likely to occur in drinking water; and

(B) the contaminant poses a risk to public health.

(5) Public availability

The information from the data base shall be available to the public in readily accessible form.

(6) Regulated contaminants

With respect to each contaminant for which a national primary drinking water regulation has been established, the data base shall include information on the detection of the contaminant at a quantifiable level in public water systems (including detection of the contaminant at levels not constituting a violation of the maximum contaminant level for the contaminant).

(7) Unregulated contaminants

With respect to contaminants for which a national primary drinking water regulation has not been established, the data base shall include—

(A) monitoring information collected by public water systems that serve a population of more than 10,000, as required by the Administrator under subsection (a) of this section;

(B) monitoring information collected from a representative sampling of public water systems that serve a population of 10,000 or fewer; and

(C) other reliable and appropriate monitoring information on the occurrence of the contaminants in public water systems that is available to the Administrator.

(h) Availability of information on small system technologies

For purposes of sections 300g–1(b)(4)(E) and 300g–4(e) of this title (relating to small system variance program), the Administrator may request information on the characteristics of commercially available treatment systems and technologies, including the effectiveness and performance of the systems and technologies under various operating conditions. The Administrator may specify the form, content, and submission date of information to be submitted by manufacturers, States, and other interested persons for the purpose of considering the systems and technologies in the development of regulations or guidance under sections 300g–1(b)(4)(E) and 300g–4(e) of this title.

(i) Screening methods

The Administrator shall review new analytical methods to screen for regulated contaminants and may approve such methods as are more accurate or cost-effective than established reference methods for use in compliance monitoring.

(July 1, 1944, ch. 373, title XIV, § 1445, as added Pub. L. 93–523, § 2(a), Dec. 16, 1974, 88 Stat. 1686; amended Pub. L. 95–190, § 12(c), (d), Nov. 16, 1977, 91 Stat. 1398; Pub. L. 99–339, title I, § 106, title III, § 301(h), June 19, 1986, 100 Stat. 650, 665; Pub. L. 100–572, § 5, Oct. 31, 1988, 102 Stat. 2889; Pub. L. 104–182, title I, §§ 111(b), 125(a), (c), (d), 126, Aug. 6, 1996, 110 Stat. 1633, 1653, 1656–1658.)

AMENDMENTS

1996—Subsec. (a)(1). Pub. L. 104–182, § 125(a), amended par. (1) generally. Prior to amendment, par. (1) read as follows: "Every person who is a supplier of water, who is or may be otherwise subject to a primary drinking water regulation prescribed under section 300g–1 of this title or to an applicable underground injection control program (as defined in section 300h–1(c) of this title), who is or may be subject to the permit requirement of section 300h–3 of this title, or to an order issued under section 300j of this title, or who is a grantee, shall establish and maintain such records, make such reports, conduct such monitoring, and provide such information as the Administrator may reasonably require by regulation to assist him in establishing regulations under this subchapter, in determining whether such person has acted or is acting in compliance with this subchapter in administering any program of financial assistance under this subchapter, in evaluating the health risks of unregulated contaminants, or in advis-

ing the public of such risks. In requiring a public water system to monitor under this subsection, the Administrator may take into consideration the system size and the contaminants likely to be found in the system's drinking water."

Subsec. (a)(2) to (8). Pub. L. 104–182, §125(c), added heading and text of par. (2) and struck out former pars. (2) to (8) which directed Administrator, not later than 18 months after June 19, 1986, to promulgate regulations requiring every public water system to conduct a monitoring program for unregulated contaminants, specified contents of regulations, provided for reporting and notification of availability of results of monitoring, waiver of monitoring requirements, and compliance by small systems, and authorized appropriations for fiscal year ending Sept. 30, 1987.

Subsec. (g). Pub. L. 104–182, §126, added subsec. (g).

Subsec. (h). Pub. L. 104–182, §111(b), added subsec. (h).

Subsec. (i). Pub. L. 104–182, §125(d), added subsec. (i).

1988—Subsec. (f). Pub. L. 100–572 added subsec. (f).

1986—Subsec. (a)(1). Pub. L. 99–339, §106(a), (b), designated existing provisions as par. (1) and inserted provisions permitting Administrator to consider size of system and contaminants likely to be found.

Subsec. (a)(2) to (7). Pub. L. 99–339, §106(b), added pars. (2) to (7).

Subsec. (a)(8). Pub. L. 99–339, §301(h), added par. (8).

Subsec. (c). Pub. L. 99–339, §106(c), substituted "shall be subject to a civil penalty of not to exceed $25,000" for "may be fined not more than $5,000".

1977—Subsec. (a). Pub. L. 95–190, §12(c), inserted provisions relating to evaluating and advising of health risks of unregulated contaminants.

Subsec. (b)(1). Pub. L. 95–190, §12(d), designated existing provisions as cls. (A) and (B) and added cl. (C) and reference to such cls. (A) to (C).

§ 300j–5. National Drinking Water Advisory Council

(a) Establishment; membership; representation of interests; term of office, vacancies; reappointment

There is established a National Drinking Water Advisory Council which shall consist of fifteen members appointed by the Administrator after consultation with the Secretary. Five members shall be appointed from the general public; five members shall be appointed from appropriate State and local agencies concerned with water hygiene and public water supply; and five members shall be appointed from representatives of private organizations or groups demonstrating an active interest in the field of water hygiene and public water supply, of which two such members shall be associated with small, rural public water systems. Each member of the Council shall hold office for a term of three years, except that—

(1) any member appointed to fill a vacancy occurring prior to the expiration of the term for which his predecessor was appointed shall be appointed for the remainder of such term; and

(2) the terms of the members first taking office shall expire as follows: Five shall expire three years after December 16, 1974, five shall expire two years after such date, and five shall expire one year after such date, as designated by the Administrator at the time of appointment.

The members of the Council shall be eligible for reappointment.

(b) Functions

The Council shall advise, consult with, and make recommendations to, the Administrator on matters relating to activities, functions, and policies of the Agency under this subchapter.

(c) Compensation and allowances; travel expenses

Members of the Council appointed under this section shall, while attending meetings or conferences of the Council or otherwise engaged in business of the Council, receive compensation and allowances at a rate to be fixed by the Administrator, but not exceeding the daily equivalent of the annual rate of basic pay in effect for grade GS–18 of the General Schedule for each day (including traveltime) during which they are engaged in the actual performance of duties vested in the Council. While away from their homes or regular places of business in the performance of services for the Council, members of the Council shall be allowed travel expenses, including per diem in lieu of subsistence, in the same manner as persons employed intermittently in the Government service are allowed expenses under section 5703(b)[1] of title 5.

(d) Advisory committee termination provision inapplicable

Section 14(a) of the Federal Advisory Committee Act (relating to termination) shall not apply to the Council.

(July 1, 1944, ch. 373, title XIV, §1446, as added Pub. L. 93–523, §2(a), Dec. 16, 1974, 88 Stat. 1688; amended Pub. L. 104–182, title I, §127, Aug. 6, 1996, 110 Stat. 1659.)

REFERENCES IN TEXT

Section 5703 of title 5, referred to in subsec. (c), was amended generally by Pub. L. 94–22, §4, May 19, 1975, 89 Stat. 85, and, as so amended, does not contain a subsec. (b).

Section 14(a) of the Federal Advisory Committee Act, referred to in subsec. (d), is section 14(a) of Pub. L. 92–463, which is set out in the Appendix to Title 5, Government Organization and Employees.

AMENDMENTS

1996—Subsec. (a). Pub. L. 104–182 inserted ", of which two such members shall be associated with small, rural public water systems" before period at end of second sentence.

TERMINATION OF ADVISORY COMMITTEES

Pub. L. 93–641, §6, Jan. 4, 1975, 88 Stat. 2275, set out as a note under section 217a of this title, provided that an advisory committee established pursuant to the Public Health Service Act shall terminate at such time as may be specifically prescribed by an Act of Congress enacted after Jan. 4, 1975.

REFERENCES IN OTHER LAWS TO GS–16, 17, OR 18 PAY RATES

References in laws to the rates of pay for GS–16, 17, or 18, or to maximum rates of pay under the General Schedule, to be considered references to rates payable under specified sections of Title 5, Government Organization and Employees, see section 529 [title I, §101(c)(1)] of Pub. L. 101–509, set out in a note under section 5376 of Title 5.

§ 300j–6. Federal agencies

(a) In general

Each department, agency, and instrumentality of the executive, legislative, and judicial branches of the Federal Government—

[1] See References in Text note below.

(1) owning or operating any facility in a wellhead protection area;

(2) engaged in any activity at such facility resulting, or which may result, in the contamination of water supplies in any such area;

(3) owning or operating any public water system; or

(4) engaged in any activity resulting, or which may result in, underground injection which endangers drinking water (within the meaning of section 300h(d)(2) of this title),

shall be subject to, and comply with, all Federal, State, interstate, and local requirements, both substantive and procedural (including any requirement for permits or reporting or any provisions for injunctive relief and such sanctions as may be imposed by a court to enforce such relief), respecting the protection of such wellhead areas, respecting such public water systems, and respecting any underground injection in the same manner and to the same extent as any person is subject to such requirements, including the payment of reasonable service charges. The Federal, State, interstate, and local substantive and procedural requirements referred to in this subsection include, but are not limited to, all administrative orders and all civil and administrative penalties and fines, regardless of whether such penalties or fines are punitive or coercive in nature or are imposed for isolated, intermittent, or continuing violations. The United States hereby expressly waives any immunity otherwise applicable to the United States with respect to any such substantive or procedural requirement (including, but not limited to, any injunctive relief, administrative order or civil or administrative penalty or fine referred to in the preceding sentence, or reasonable service charge). The reasonable service charges referred to in this subsection include, but are not limited to, fees or charges assessed in connection with the processing and issuance of permits, renewal of permits, amendments to permits, review of plans, studies, and other documents, and inspection and monitoring of facilities, as well as any other nondiscriminatory charges that are assessed in connection with a Federal, State, interstate, or local regulatory program respecting the protection of wellhead areas or public water systems or respecting any underground injection. Neither the United States, nor any agent, employee, or officer thereof, shall be immune or exempt from any process or sanction of any State or Federal Court[1] with respect to the enforcement of any such injunctive relief. No agent, employee, or officer of the United States shall be personally liable for any civil penalty under any Federal, State, interstate, or local law concerning the protection of wellhead areas or public water systems or concerning underground injection with respect to any act or omission within the scope of the official duties of the agent, employee, or officer. An agent, employee, or officer of the United States shall be subject to any criminal sanction (including, but not limited to, any fine or imprisonment) under any Federal or State requirement adopted pursuant to this subchapter, but no department, agency, or instrumentality of the executive, legislative, or judicial branch of the Federal Government shall be subject to any such sanction. The President may exempt any facility of any department, agency, or instrumentality in the executive branch from compliance with such a requirement if he determines it to be in the paramount interest of the United States to do so. No such exemption shall be granted due to lack of appropriation unless the President shall have specifically requested such appropriation as a part of the budgetary process and the Congress shall have failed to make available such requested appropriation. Any exemption shall be for a period not in excess of 1 year, but additional exemptions may be granted for periods not to exceed 1 year upon the President's making a new determination. The President shall report each January to the Congress all exemptions from the requirements of this section granted during the preceding calendar year, together with his reason for granting each such exemption.

(b) Administrative penalty orders

(1) In general

If the Administrator finds that a Federal agency has violated an applicable requirement under this subchapter, the Administrator may issue a penalty order assessing a penalty against the Federal agency.

(2) Penalties

The Administrator may, after notice to the agency, assess a civil penalty against the agency in an amount not to exceed $25,000 per day per violation.

(3) Procedure

Before an administrative penalty order issued under this subsection becomes final, the Administrator shall provide the agency an opportunity to confer with the Administrator and shall provide the agency notice and an opportunity for a hearing on the record in accordance with chapters 5 and 7 of title 5.

(4) Public review

(A) In general

Any interested person may obtain review of an administrative penalty order issued under this subsection. The review may be obtained in the United States District Court for the District of Columbia or in the United States District Court for the district in which the violation is alleged to have occurred by the filing of a complaint with the court within the 30-day period beginning on the date the penalty order becomes final. The person filing the complaint shall simultaneously send a copy of the complaint by certified mail to the Administrator and the Attorney General.

(B) Record

The Administrator shall promptly file in the court a certified copy of the record on which the order was issued.

(C) Standard of review

The court shall not set aside or remand the order unless the court finds that there is

[1] So in original. Probably should not be capitalized.

not substantial evidence in the record, taken as a whole, to support the finding of a violation or that the assessment of the penalty by the Administrator constitutes an abuse of discretion.

(D) Prohibition on additional penalties

The court may not impose an additional civil penalty for a violation that is subject to the order unless the court finds that the assessment constitutes an abuse of discretion by the Administrator.

(c) Limitation on State use of funds collected from Federal Government

Unless a State law in effect on August 6, 1996, or a State constitution requires the funds to be used in a different manner, all funds collected by a State from the Federal Government from penalties and fines imposed for violation of any substantive or procedural requirement referred to in subsection (a) of this section shall be used by the State only for projects designed to improve or protect the environment or to defray the costs of environmental protection or enforcement.

(d) Indian rights and sovereignty as unaffected; "Federal agency" defined

(1) Nothing in the Safe Drinking Water Amendments of 1977 shall be construed to alter or affect the status of American Indian lands or water rights nor to waive any sovereignty over Indian lands guaranteed by treaty or statute.

(2) For the purposes of this chapter, the term ''Federal agency'' shall not be construed to refer to or include any American Indian tribe, nor to the Secretary of the Interior in his capacity as trustee of Indian lands.

(e) Washington Aqueduct

The Secretary of the Army shall not pass the cost of any penalty assessed under this subchapter on to any customer, user, or other purchaser of drinking water from the Washington Aqueduct system, including finished water from the Dalecarlia or McMillan treatment plant.

(July 1, 1944, ch. 373, title XIV, §1447, as added Pub. L. 93–523, §2(a), Dec. 16, 1974, 88 Stat. 1688; amended Pub. L. 95–190, §8(a), (d), Nov. 16, 1977, 91 Stat. 1396, 1397; Pub. L. 104–182, title I, §129(a), (c), Aug. 6, 1996, 110 Stat. 1660, 1662.)

REFERENCES IN TEXT

The Safe Drinking Water Amendments of 1977, referred to in subsec. (d)(1), is Pub. L. 95–190, Nov. 16, 1977, 91 Stat. 1393. For complete classification of this Act to the Code, see Short Title of 1977 Amendment note set out under section 201 of this title and Tables.

AMENDMENTS

1996—Subsecs. (a) to (d). Pub. L. 104–182, §129(a), added subsecs. (a) to (c), redesignated former subsec. (c) as (d), and struck out former subsecs. (a) and (b) which related to compliance by Federal agencies with Federal, State, and local requirements respecting provision of safe drinking water and respecting underground injection programs, liability for civil penalties, and waiver of compliance requirements when necessary in interest of national security.

Subsec. (e). Pub. L. 104–182, §129(c), added subsec. (e).

1977—Subsec. (a). Pub. L. 95–190, §8(a), substituted provisions relating to compliance by Federal agencies having jurisdiction over federally owned or maintained public water systems, or engaged in underground injection activities with Federal, State, and local requirements, etc., for provisions relating to compliance by Federal agencies having jurisdiction over federally owned or maintained public water systems with national primary drinking water regulations.

Subsec. (c). Pub. L. 95–190, §8(d), added subsec. (c).

§ 300j–7. Judicial review

(a) Courts of appeals; petition for review: actions respecting regulations; filing period; grounds arising after expiration of filing period; exclusiveness of remedy

A petition for review of—

(1) actions pertaining to the establishment of national primary drinking water regulations (including maximum contaminant level goals) may be filed only in the United States Court of Appeals for the District of Columbia circuit; and

(2) any other final action of the Administrator under this chapter may be filed in the circuit in which the petitioner resides or transacts business which is directly affected by the action.

Any such petition shall be filed within the 45-day period beginning on the date of the promulgation of the regulation or any other final Agency action with respect to which review is sought or on the date of the determination with respect to which review is sought, and may be filed after the expiration of such 45-day period if the petition is based solely on grounds arising after the expiration of such period. Action of the Administrator with respect to which review could have been obtained under this subsection shall not be subject to judicial review in any civil or criminal proceeding for enforcement or in any civil action to enjoin enforcement. In any petition concerning the assessment of a civil penalty pursuant to section 300g–3(g)(3)(B) of this title, the petitioner shall simultaneously send a copy of the complaint by certified mail to the Administrator and the Attorney General. The court shall set aside and remand the penalty order if the court finds that there is not substantial evidence in the record to support the finding of a violation or that the assessment of the penalty by the Administrator constitutes an abuse of discretion.

(b) District courts; petition for review: actions respecting variances or exemptions; filing period; grounds arising after expiration of filing period; exclusiveness of remedy

The United States district courts shall have jurisdiction of actions brought to review (1) the granting of, or the refusing to grant, a variance or exemption under section 300g–4 or 300g–5 of this title or (2) the requirements of any schedule prescribed for a variance or exemption under such section or the failure to prescribe such a schedule. Such an action may only be brought upon a petition for review filed with the court within the 45-day period beginning on the date the action sought to be reviewed is taken or, in the case of a petition to review the refusal to grant a variance or exemption or the failure to prescribe a schedule, within the 45-day period beginning on the date action is required to be taken on the variance, exemption, or schedule,

as the case may be. A petition for such review may be filed after the expiration of such period if the petition is based solely on grounds arising after the expiration of such period. Action with respect to which review could have been obtained under this subsection shall not be subject to judicial review in any civil or criminal proceeding for enforcement or in any civil action to enjoin enforcement.

(c) Judicial order for additional evidence before Administrator; modified or new findings; recommendation for modification or setting aside of original determination

In any judicial proceeding in which review is sought of a determination under this subchapter required to be made on the record after notice and opportunity for hearing, if any party applies to the court for leave to adduce additional evidence and shows to the satisfaction of the court that such additional evidence is material and that there were reasonable grounds for the failure to adduce such evidence in the proceeding before the Administrator, the court may order such additional evidence (and evidence in rebuttal thereof) to be taken before the Administrator, in such manner and upon such term and conditions as the court may deem proper. The Administrator may modify his findings as to the facts, or make new findings, by reason of the additional evidence so taken, and he shall file such modified or new findings, and his recommendation, if any, for the modification or setting aside of his original determination, with the return of such additional evidence.

(July 1, 1944, ch. 373, title XIV, §1448, as added Pub. L. 93–523, §2(a), Dec. 16, 1974, 88 Stat. 1689; amended Pub. L. 99–339, title III, §303, June 19, 1986, 100 Stat. 667; Pub. L. 104–182, title I, §113(c), Aug. 6, 1996, 110 Stat. 1636.)

AMENDMENTS

1996—Subsec. (a). Pub. L. 104–182, §113(c)(2), (3), in concluding provisions, substituted "or any other final Agency action" for "or issuance of the order" and inserted at end "In any petition concerning the assessment of a civil penalty pursuant to section 300g–3(g)(3)(B) of this title, the petitioner shall simultaneously send a copy of the complaint by certified mail to the Administrator and the Attorney General. The court shall set aside and remand the penalty order if the court finds that there is not substantial evidence in the record to support the finding of a violation or that the assessment of the penalty by the Administrator constitutes an abuse of discretion."

Subsec. (a)(2). Pub. L. 104–182, §113(c)(1), substituted "any other final action" for "any other action".

1986—Subsec. (a)(1). Pub. L. 99–339, §303(1), amended par. (1) generally. Prior to amendment, par. (1) read as follows: "action of the Administrator in promulgating any national primary drinking water regulation under section 300g–1 of this title, any regulation under section 300g–2(b)(1) of this title, any regulation under section 300g–3(c) of this title, any regulation for State underground injection control programs under section 300h of this title, or any general regulation for the administration of this subchapter may be filed only in the United States Court of Appeals for the District of Columbia Circuit; and".

Subsec. (a)(2). Pub. L. 99–339, §303(2), amended par. (2) generally. Prior to amendment, par. (2) read as follows: "action of the Administrator in promulgating any other regulation under this subchapter, issuing any order under this subchapter, or making any determination under this subchapter may be filed only in the United States court of appeals for the appropriate circuit."

§ 300j–8. Citizen's civil action

(a) Persons subject to civil action; jurisdiction of enforcement proceedings

Except as provided in subsection (b) of this section, any person may commence a civil action on his own behalf—

(1) against any person (including (A) the United States, and (B) any other governmental instrumentality or agency to the extent permitted by the eleventh amendment to the Constitution) who is alleged to be in violation of any requirement prescribed by or under this subchapter;

(2) against the Administrator where there is alleged a failure of the Administrator to perform any act or duty under this subchapter which is not discretionary with the Administrator; or

(3) for the collection of a penalty by the United States Government (and associated costs and interest) against any Federal agency that fails, by the date that is 18 months after the effective date of a final order to pay a penalty assessed by the Administrator under section 300h–8(b)[1] of this title, to pay the penalty.

No action may be brought under paragraph (1) against a public water system for a violation of a requirement prescribed by or under this subchapter which occurred within the 27-month period beginning on the first day of the month in which this subchapter is enacted. The United States district courts shall have jurisdiction, without regard to the amount in controversy or the citizenship of the parties, to enforce in an action brought under this subsection any requirement prescribed by or under this subchapter or to order the Administrator to perform an act or duty described in paragraph (2), as the case may be.

(b) Conditions for commencement of civil action; notice

No civil action may be commenced—

(1) under subsection (a)(1) of this section respecting violation of a requirement prescribed by or under this subchapter—

(A) prior to sixty days after the plaintiff has given notice of such violation (i) to the Administrator, (ii) to any alleged violator of such requirement and (iii) to the State in which the violation occurs, or

(B) if the Administrator, the Attorney General, or the State has commenced and is diligently prosecuting a civil action in a court of the United States to require compliance with such requirement, but in any such action in a court of the United States any person may intervene as a matter of right; or

(2) under subsection (a)(2) of this section prior to sixty days after the plaintiff has given notice of such action to the Administrator; or

(3) under subsection (a)(3) of this section prior to 60 days after the plaintiff has given

[1] So in original. Probably should be section "300j–6(b)".

notice of such action to the Attorney General and to the Federal agency.

Notice required by this subsection shall be given in such manner as the Administrator shall prescribe by regulation. No person may commence a civil action under subsection (a) of this section to require a State to prescribe a schedule under section 300g–4 or 300g–5 of this title for a variance or exemption, unless such person shows to the satisfaction of the court that the State has in a substantial number of cases failed to prescribe such schedules.

(c) Intervention of right

In any action under this section, the Administrator or the Attorney General, if not a party, may intervene as a matter of right.

(d) Costs; attorney fees; expert witness fees; filing of bond

The court, in issuing any final order in any action brought under subsection (a) of this section, may award costs of litigation (including reasonable attorney and expert witness fees) to any party whenever the court determines such an award is appropriate. The court may, if a temporary restraining order or preliminary injunction is sought, require the filing of a bond or equivalent security in accordance with the Federal Rules of Civil Procedure.

(e) Availability of other relief

Nothing in this section shall restrict any right which any person (or class of persons) may have under any statute or common law to seek enforcement of any requirement prescribed by or under this subchapter or to seek any other relief. Nothing in this section or in any other law of the United States shall be construed to prohibit, exclude, or restrict any State or local government from—

(1) bringing any action or obtaining any remedy or sanction in any State or local court, or

(2) bringing any administrative action or obtaining any administrative remedy or sanction,

against any agency of the United States under State or local law to enforce any requirement respecting the provision of safe drinking water or respecting any underground injection control program. Nothing in this section shall be construed to authorize judicial review of regulations or orders of the Administrator under this subchapter, except as provided in section 300j–7 of this title. For provisions providing for application of certain requirements to such agencies in the same manner as to nongovernmental entities, see section 300j–6 of this title.

(July 1, 1944, ch. 373, title XIV, §1449, as added Pub. L. 93–523, §2(a), Dec. 16, 1974, 88 Stat. 1690; amended Pub. L. 95–190, §8(c), Nov. 16, 1977, 91 Stat. 1397; Pub. L. 104–182, title I, §129(b), Aug. 6, 1996, 110 Stat. 1662.)

REFERENCES IN TEXT

The Federal Rules of Civil Procedure, referred to in subsec. (d), are set out in the Appendix to Title 28, Judiciary and Judicial Procedure.

AMENDMENTS

1996—Subsec. (a)(3). Pub. L. 104–182, §129(b)(1), added par. (3).

Subsec. (b)(3). Pub. L. 104–182, §129(b)(2), added par. (3).

1977—Subsec. (e). Pub. L. 95–190 inserted provisions relating to suits by State or local governments for enforcement of safe drinking water, etc., requirements.

§ 300j–9. General provisions

(a) Regulations; delegation of functions

(1) The Administrator is authorized to prescribe such regulations as are necessary or appropriate to carry out his functions under this subchapter.

(2) The Administrator may delegate any of his functions under this subchapter (other than prescribing regulations) to any officer or employee of the Agency.

(b) Utilization of officers and employees of Federal agencies

The Administrator, with the consent of the head of any other agency of the United States, may utilize such officers and employees of such agency as he deems necessary to assist him in carrying out the purposes of this subchapter.

(c) Assignment of Agency personnel to State or interstate agencies

Upon the request of a State or interstate agency, the Administrator may assign personnel of the Agency to such State or interstate agency for the purposes of carrying out the provisions of this subchapter.

(d) Payments of grants; adjustments; advances; reimbursement; installments; conditions; eligibility for grants; "nonprofit agency or institution" defined

(1) The Administrator may make payments of grants under this subchapter (after necessary adjustment on account of previously made underpayments or overpayments) in advance or by way of reimbursement, and in such installments and on such conditions as he may determine.

(2) Financial assistance may be made available in the form of grants only to individuals and nonprofit agencies or institutions. For purposes of this paragraph, the term ''nonprofit agency or institution'' means an agency or institution no part of the net earnings of which inure, or may lawfully inure, to the benefit of any private shareholder or individual.

(e) Labor standards

The Administrator shall take such action as may be necessary to assure compliance with provisions of sections 3141–3144, 3146, and 3147 of title 40. The Secretary of Labor shall have, with respect to the labor standards specified in this subsection, the authority and functions set forth in Reorganization Plan Numbered 14 of 1950 (15 F.R. 3176; 64 Stat. 1267) and section 3145 of title 40.

(f) Appearance and representation of Administrator through Attorney General or attorney appointees

The Administrator shall request the Attorney General to appear and represent him in any civil action instituted under this subchapter to which the Administrator is a party. Unless, within a reasonable time, the Attorney General notifies the Administrator that he will appear in such action, attorneys appointed by the Administrator shall appear and represent him.

(g) Authority of Administrator under other provisions unaffected

The provisions of this subchapter shall not be construed as affecting any authority of the Administrator under part G of subchapter II of this chapter.

(h) Reports to Congressional committees; review by Office of Management and Budget: submittal of comments to Congressional committees

Not later than April 1 of each year, the Administrator shall submit to the Committee on Commerce, Science, and Transportation of the Senate and the Committee on Energy and Commerce of the House of Representatives a report respecting the activities of the Agency under this subchapter and containing such recommendations for legislation as he considers necessary. The report of the Administrator under this subsection which is due not later than April 1, 1975, and each subsequent report of the Administrator under this subsection shall include a statement on the actual and anticipated cost to public water systems in each State of compliance with the requirements of this subchapter. The Office of Management and Budget may review any report required by this subsection before its submission to such committees of Congress, but the Office may not revise any such report, require any revision in any such report, or delay its submission beyond the day prescribed for its submission, and may submit to such committees of Congress its comments respecting any such report.

(i) Discrimination prohibition; filing of complaint; investigation; orders of Secretary; notice and hearing; settlements; attorneys' fees; judicial review; filing of petition; procedural requirements; stay of orders; exclusiveness of remedy; civil actions for enforcement of orders; appropriate relief; mandamus proceedings; prohibition inapplicable to undirected but deliberate violations

(1) No employer may discharge any employee or otherwise discriminate against any employee with respect to his compensation, terms, conditions, or privileges of employment because the employee (or any person acting pursuant to a request of the employee) has—

(A) commenced, caused to be commenced, or is about to commence or cause to be commenced a proceeding under this subchapter or a proceeding for the administration or enforcement of drinking water regulations or underground injection control programs of a State,

(B) testified or is about to testify in any such proceeding, or

(C) assisted or participated or is about to assist or participate in any manner in such a proceeding or in any other action to carry out the purposes of this subchapter.

(2)(A) Any employee who believes that he has been discharged or otherwise discriminated against by any person in violation of paragraph (1) may, within 30 days after such violation occurs, file (or have any person file on his behalf) a complaint with the Secretary of Labor (hereinafter in this subsection referred to as the "Secretary") alleging such discharge or discrimination. Upon receipt of such a complaint, the Secretary shall notify the person named in the complaint of the filing of the complaint.

(B)(i) Upon receipt of a complaint filed under subparagraph (A), the Secretary shall conduct an investigation of the violation alleged in the complaint. Within 30 days of the receipt of such complaint, the Secretary shall complete such investigation and shall notify in writing the complainant (and any person acting in his behalf) and the person alleged to have committed such violation of the results of the investigation conducted pursuant to this subparagraph. Within 90 days of the receipt of such complaint the Secretary shall, unless the proceeding on the complaint is terminated by the Secretary on the basis of a settlement entered into by the Secretary and the person alleged to have committed such violation, issue an order either providing the relief prescribed by clause (ii) or denying the complaint. An order of the Secretary shall be made on the record after notice and opportunity for agency hearing. The Secretary may not enter into a settlement terminating a proceeding on a complaint without the participation and consent of the complainant.

(ii) If in response to a complaint filed under subparagraph (A) the Secretary determines that a violation of paragraph (1) has occurred, the Secretary shall order (I) the person who committed such violation to take affirmative action to abate the violation, (II) such person to reinstate the complainant to his former position together with the compensation (including back pay), terms, conditions, and privileges of his employment, (III) compensatory damages, and (IV) where appropriate, exemplary damages. If such an order is issued, the Secretary, at the request of the complainant, shall assess against the person against whom the order is issued a sum equal to the aggregate amount of all costs and expenses (including attorneys' fees) reasonably incurred, as determined by the Secretary, by the complainant for, or in connection with, the bringing of the complaint upon which the order was issued.

(3)(A) Any person adversely affected or aggrieved by an order issued under paragraph (2) may obtain review of the order in the United States Court of Appeals for the circuit in which the violation, with respect to which the order was issued, allegedly occurred. The petition for review must be filed within sixty days from the issuance of the Secretary's order. Review shall conform to chapter 7 of title 5. The commencement of proceedings under this subparagraph shall not, unless ordered by the court, operate as a stay of the Secretary's order.

(B) An order of the Secretary with respect to which review could have been obtained under subparagraph (A) shall not be subject to judicial review in any criminal or other civil proceeding.

(4) Whenever a person has failed to comply with an order issued under paragraph (2)(B), the Secretary shall file a civil action in the United States District Court for the district in which the violation was found to occur to enforce such order. In actions brought under this paragraph, the district courts shall have jurisdiction to grant all appropriate relief including, but not

limited to, injunctive relief, compensatory, and exemplary damages.

(5) Any nondiscretionary duty imposed by this section is enforceable in mandamus proceeding brought under section 1361 of title 28.

(6) Paragraph (1) shall not apply with respect to any employee who, acting without direction from his employer (or the employer's agent), deliberately causes a violation of any requirement of this subchapter.

(July 1, 1944, ch. 373, title XIV, §1450, as added Pub. L. 93–523, §2(a), Dec. 16, 1974, 88 Stat. 1691; amended Pub. L. 98–620, title IV, §402(38), Nov. 8, 1984, 98 Stat. 3360; Pub. L. 103–437, §15(a)(2), Nov. 2, 1994, 108 Stat. 4591.)

REFERENCES IN TEXT

Reorganization Plan Numbered 14 of 1950 (15 F.R. 3176; 64 Stat. 1267), referred to in subsec. (e), is set out in the Appendix to Title 5, Government Organization and Employees.

Part G of subchapter II of this chapter, referred to in subsec. (g), is classified to section 264 of this title.

CODIFICATION

In subsec. (e), "sections 3141–3144, 3146, and 3147 of title 40" substituted for "the Act of March 3, 1931 (known as the Davis-Bacon Act; 40 U.S.C. 276a—276a(5))" and "section 3145 of title 40" substituted for "section 2 of the Act of June 13, 1934 (40 U.S.C. 276c)" on authority of Pub. L. 107–217, §5(c), Aug. 21, 2002, 116 Stat. 1303, the first section of which enacted Title 40, Public Buildings, Property, and Works.

AMENDMENTS

1994—Subsec. (h). Pub. L. 103–437 substituted "Committee on Commerce, Science, and Transportation of the Senate and the Committee on Energy and Commerce of the House" for "Committee on Commerce of the Senate and the Committee on Interstate and Foreign Commerce of the House".

1984—Subsec. (i)(4). Pub. L. 98–620 struck out provision which required civil actions filed under par. (4) to be heard and decided expeditiously.

CHANGE OF NAME

Committee on Energy and Commerce of House of Representatives treated as referring to Committee on Commerce of House of Representatives by section 1(a) of Pub. L. 104–14, set out as a note preceding section 21 of Title 2, The Congress. Committee on Commerce of House of Representatives changed to Committee on Energy and Commerce of House of Representatives, and jurisdiction over matters relating to securities and exchanges and insurance generally transferred to Committee on Financial Services of House of Representatives by House Resolution No. 5, One Hundred Seventh Congress, Jan. 3, 2001.

EFFECTIVE DATE OF 1984 AMENDMENT

Amendment by Pub. L. 98–620 not applicable to cases pending on Nov. 8, 1984, see section 403 of Pub. L. 98–620, set out as an Effective Date note under section 1657 of Title 28, Judiciary and Judicial Procedure.

§300j–10. Appointment of scientific, etc., personnel by Administrator of Environmental Protection Agency for implementation of responsibilities; compensation

To the extent that the Administrator of the Environmental Protection Agency deems such action necessary to the discharge of his functions under title XIV of the Public Health Service Act [42 U.S.C. 300f et seq.] (relating to safe drinking water) and under other provisions of law, he may appoint personnel to fill not more than thirty scientific, engineering, professional, legal, and administrative positions within the Environmental Protection Agency without regard to the civil service laws and may fix the compensation of such personnel not in excess of the maximum rate payable for GS–18 of the General Schedule under section 5332 of title 5.

(Pub. L. 95–190, §11(b), Nov. 16, 1977, 91 Stat. 1398.)

REFERENCES IN TEXT

The Public Health Service Act, referred to in text, is act July 1, 1944, ch. 373, 58 Stat. 682, as amended. Title XIV of the Public Health Service Act is classified generally to this subchapter (§300f et seq.). For complete classification of this Act to the Code, see Short Title note set out under section 201 of this title and Tables.

CODIFICATION

Section was enacted as part of the Safe Drinking Water Amendments of 1977, and not as part of the Public Health Service Act which comprises this chapter.

REFERENCES IN OTHER LAWS TO GS–16, 17, OR 18 PAY RATES

References in laws to the rates of pay for GS–16, 17, or 18, or to maximum rates of pay under the General Schedule, to be considered references to rates payable under specified sections of Title 5, Government Organization and Employees, see section 529 [title I, §101(c)(1)] of Pub. L. 101–509, set out in a note under section 5376 of Title 5.

§300j–11. Indian Tribes

(a) In general

Subject to the provisions of subsection (b) of this section, the Administrator—

(1) is authorized to treat Indian Tribes as States under this subchapter,

(2) may delegate to such Tribes primary enforcement responsibility for public water systems and for underground injection control, and

(3) may provide such Tribes grant and contract assistance to carry out functions provided by this subchapter.

(b) EPA regulations

(1) Specific provisions

The Administrator shall, within 18 months after June 19, 1986, promulgate final regulations specifying those provisions of this subchapter for which it is appropriate to treat Indian Tribes as States. Such treatment shall be authorized only if:

(A) the Indian Tribe is recognized by the Secretary of the Interior and has a governing body carrying out substantial governmental duties and powers;

(B) the functions to be exercised by the Indian Tribe are within the area of the Tribal Government's jurisdiction; and

(C) the Indian Tribe is reasonably expected to be capable, in the Administrator's judgment, of carrying out the functions to be exercised in a manner consistent with the terms and purposes of this subchapter and of all applicable regulations.

(2) Provisions where treatment as State inappropriate

For any provision of this subchapter where treatment of Indian Tribes as identical to

States is inappropriate, administratively infeasible or otherwise inconsistent with the purposes of this subchapter, the Administrator may include in the regulations promulgated under this section, other means for administering such provision in a manner that will achieve the purpose of the provision. Nothing in this section shall be construed to allow Indian Tribes to assume or maintain primary enforcement responsibility for public water systems or for underground injection control in a manner less protective of the health of persons than such responsibility may be assumed or maintained by a State. An Indian tribe[1] shall not be required to exercise criminal enforcement jurisdiction for purposes of complying with the preceding sentence.

(July 1, 1944, ch. 373, title XIV, § 1451, as added Pub. L. 99–339, title III, § 302(a), June 19, 1986, 100 Stat. 665; amended Pub. L. 104–182, title V, § 501(f)(6), Aug. 6, 1996, 110 Stat. 1692.)

AMENDMENTS

1996—Pub. L. 104–182 made technical amendment to section catchline and subsec. (a) designation.

§ 300j–12. State revolving loan funds

(a) General authority

(1) Grants to States to establish State loan funds

(A) In general

The Administrator shall offer to enter into agreements with eligible States to make capitalization grants, including letters of credit, to the States under this subsection to further the health protection objectives of this subchapter, promote the efficient use of fund resources, and for other purposes as are specified in this subchapter.

(B) Establishment of fund

To be eligible to receive a capitalization grant under this section, a State shall establish a drinking water treatment revolving loan fund (referred to in this section as a "State loan fund") and comply with the other requirements of this section. Each grant to a State under this section shall be deposited in the State loan fund established by the State, except as otherwise provided in this section and in other provisions of this subchapter. No funds authorized by other provisions of this subchapter to be used for other purposes specified in this subchapter shall be deposited in any State loan fund.

(C) Extended period

The grant to a State shall be available to the State for obligation during the fiscal year for which the funds are authorized and during the following fiscal year, except that grants made available from funds provided prior to fiscal year 1997 shall be available for obligation during each of the fiscal years 1997 and 1998.

(D) Allotment formula

Except as otherwise provided in this section, funds made available to carry out this section shall be allotted to States that have entered into an agreement pursuant to this section (other than the District of Columbia) in accordance with—

(i) for each of fiscal years 1995 through 1997, a formula that is the same as the formula used to distribute public water system supervision grant funds under section 300j–2 of this title in fiscal year 1995, except that the minimum proportionate share established in the formula shall be 1 percent of available funds and the formula shall be adjusted to include a minimum proportionate share for the State of Wyoming and the District of Columbia; and

(ii) for fiscal year 1998 and each subsequent fiscal year, a formula that allocates to each State the proportional share of the State needs identified in the most recent survey conducted pursuant to subsection (h) of this section, except that the minimum proportionate share provided to each State shall be the same as the minimum proportionate share provided under clause (i).

(E) Reallotment

The grants not obligated by the last day of the period for which the grants are available shall be reallotted according to the appropriate criteria set forth in subparagraph (D), except that the Administrator may reserve and allocate 10 percent of the remaining amount for financial assistance to Indian Tribes in addition to the amount allotted under subsection (i) of this section and none of the funds reallotted by the Administrator shall be reallotted to any State that has not obligated all sums allotted to the State pursuant to this section during the period in which the sums were available for obligation.

(F) Nonprimacy States

The State allotment for a State not exercising primary enforcement responsibility for public water systems shall not be deposited in any such fund but shall be allotted by the Administrator under this subparagraph. Pursuant to section 300j–2(a)(9)(A) of this title such sums allotted under this subparagraph shall be reserved as needed by the Administrator to exercise primary enforcement responsibility under this subchapter in such State and the remainder shall be reallotted to States exercising primary enforcement responsibility for public water systems for deposit in such funds. Whenever the Administrator makes a final determination pursuant to section 300g–2(b) of this title that the requirements of section 300g–2(a) of this title are no longer being met by a State, additional grants for such State under this subchapter shall be immediately terminated by the Administrator. This subparagraph shall not apply to any State not exercising primary enforcement responsibility for public water systems as of August 6, 1996.

(G) Other programs

(i) New system capacity

Beginning in fiscal year 1999, the Administrator shall withhold 20 percent of each

[1] So in original. Probably should be capitalized.

capitalization grant made pursuant to this section to a State unless the State has met the requirements of section 300g–9(a) of this title (relating to capacity development) and shall withhold 10 percent for fiscal year 2001, 15 percent for fiscal year 2002, and 20 percent for fiscal year 2003 if the State has not complied with the provisions of section 300g–9(c) of this title (relating to capacity development strategies). Not more than a total of 20 percent of the capitalization grants made to a State in any fiscal year may be withheld under the preceding provisions of this clause. All funds withheld by the Administrator pursuant to this clause shall be reallotted by the Administrator on the basis of the same ratio as is applicable to funds allotted under subparagraph (D). None of the funds reallotted by the Administrator pursuant to this paragraph shall be allotted to a State unless the State has met the requirements of section 300g–9 of this title (relating to capacity development).

(ii) Operator certification

The Administrator shall withhold 20 percent of each capitalization grant made pursuant to this section unless the State has met the requirements of 300g–8[1] of this title (relating to operator certification). All funds withheld by the Administrator pursuant to this clause shall be reallotted by the Administrator on the basis of the same ratio as applicable to funds allotted under subparagraph (D). None of the funds reallotted by the Administrator pursuant to this paragraph shall be allotted to a State unless the State has met the requirements of section 300g–8 of this title (relating to operator certification).

(2) Use of funds

Except as otherwise authorized by this subchapter, amounts deposited in a State loan fund, including loan repayments and interest earned on such amounts, shall be used only for providing loans or loan guarantees, or as a source of reserve and security for leveraged loans, the proceeds of which are deposited in a State loan fund established under paragraph (1), or other financial assistance authorized under this section to community water systems and nonprofit noncommunity water systems, other than systems owned by Federal agencies. Financial assistance under this section may be used by a public water system only for expenditures (not including monitoring, operation, and maintenance expenditures) of a type or category which the Administrator has determined, through guidance, will facilitate compliance with national primary drinking water regulations applicable to the system under section 300g–1 of this title or otherwise significantly further the health protection objectives of this subchapter. The funds may also be used to provide loans to a system referred to in section 300f(4)(B) of this title for the purpose of providing the treatment described in section 300f(4)(B)(i)(III) of this title. The funds shall not be used for the acquisition of real property or interests therein, unless the acquisition is integral to a project authorized by this paragraph and the purchase is from a willing seller. Of the amount credited to any State loan fund established under this section in any fiscal year, 15 percent shall be available solely for providing loan assistance to public water systems which regularly serve fewer than 10,000 persons to the extent such funds can be obligated for eligible projects of public water systems.

(3) Limitation

(A) In general

Except as provided in subparagraph (B), no assistance under this section shall be provided to a public water system that—

(i) does not have the technical, managerial, and financial capability to ensure compliance with the requirements of this subchapter; or

(ii) is in significant noncompliance with any requirement of a national primary drinking water regulation or variance.

(B) Restructuring

A public water system described in subparagraph (A) may receive assistance under this section if—

(i) the use of the assistance will ensure compliance; and

(ii) if subparagraph (A)(i) applies to the system, the owner or operator of the system agrees to undertake feasible and appropriate changes in operations (including ownership, management, accounting, rates, maintenance, consolidation, alternative water supply, or other procedures) if the State determines that the measures are necessary to ensure that the system has the technical, managerial, and financial capability to comply with the requirements of this subchapter over the long term.

(C) Review

Prior to providing assistance under this section to a public water system that is in significant noncompliance with any requirement of a national primary drinking water regulation or variance, the State shall conduct a review to determine whether subparagraph (A)(i) applies to the system.

(b) Intended use plans

(1) In general

After providing for public review and comment, each State that has entered into a capitalization agreement pursuant to this section shall annually prepare a plan that identifies the intended uses of the amounts available to the State loan fund of the State.

(2) Contents

An intended use plan shall include—

(A) a list of the projects to be assisted in the first fiscal year that begins after the date of the plan, including a description of the project, the expected terms of financial assistance, and the size of the community served;

[1] So in original. Probably should be preceded by "section".

(B) the criteria and methods established for the distribution of funds; and

(C) a description of the financial status of the State loan fund and the short-term and long-term goals of the State loan fund.

(3) Use of funds

(A) In general

An intended use plan shall provide, to the maximum extent practicable, that priority for the use of funds be given to projects that—

(i) address the most serious risk to human health;

(ii) are necessary to ensure compliance with the requirements of this subchapter (including requirements for filtration); and

(iii) assist systems most in need on a per household basis according to State affordability criteria.

(B) List of projects

Each State shall, after notice and opportunity for public comment, publish and periodically update a list of projects in the State that are eligible for assistance under this section, including the priority assigned to each project and, to the extent known, the expected funding schedule for each project.

(c) Fund management

Each State loan fund under this section shall be established, maintained, and credited with repayments and interest. The fund corpus shall be available in perpetuity for providing financial assistance under this section. To the extent amounts in the fund are not required for current obligation or expenditure, such amounts shall be invested in interest bearing obligations.

(d) Assistance for disadvantaged communities

(1) Loan subsidy

Notwithstanding any other provision of this section, in any case in which the State makes a loan pursuant to subsection (a)(2) of this section to a disadvantaged community or to a community that the State expects to become a disadvantaged community as the result of a proposed project, the State may provide additional subsidization (including forgiveness of principal).

(2) Total amount of subsidies

For each fiscal year, the total amount of loan subsidies made by a State pursuant to paragraph (1) may not exceed 30 percent of the amount of the capitalization grant received by the State for the year.

(3) "Disadvantaged community" defined

In this subsection, the term "disadvantaged community" means the service area of a public water system that meets affordability criteria established after public review and comment by the State in which the public water system is located. The Administrator may publish information to assist States in establishing affordability criteria.

(e) State contribution

Each agreement under subsection (a) of this section shall require that the State deposit in the State loan fund from State moneys an amount equal to at least 20 percent of the total amount of the grant to be made to the State on or before the date on which the grant payment is made to the State, except that a State shall not be required to deposit such amount into the fund prior to the date on which each grant payment is made for fiscal years 1994, 1995, 1996, and 1997 if the State deposits the State contribution amount into the State loan fund prior to September 30, 1999.

(f) Types of assistance

Except as otherwise limited by State law, the amounts deposited into a State loan fund under this section may be used only—

(1) to make loans, on the condition that—

(A) the interest rate for each loan is less than or equal to the market interest rate, including an interest free loan;

(B) principal and interest payments on each loan will commence not later than 1 year after completion of the project for which the loan was made, and each loan will be fully amortized not later than 20 years after the completion of the project, except that in the case of a disadvantaged community (as defined in subsection (d)(3) of this section), a State may provide an extended term for a loan, if the extended term—

(i) terminates not later than the date that is 30 years after the date of project completion; and

(ii) does not exceed the expected design life of the project;

(C) the recipient of each loan will establish a dedicated source of revenue (or, in the case of a privately owned system, demonstrate that there is adequate security) for the repayment of the loan; and

(D) the State loan fund will be credited with all payments of principal and interest on each loan;

(2) to buy or refinance the debt obligation of a municipality or an intermunicipal or interstate agency within the State at an interest rate that is less than or equal to the market interest rate in any case in which a debt obligation is incurred after July 1, 1993;

(3) to guarantee, or purchase insurance for, a local obligation (all of the proceeds of which finance a project eligible for assistance under this section) if the guarantee or purchase would improve credit market access or reduce the interest rate applicable to the obligation;

(4) as a source of revenue or security for the payment of principal and interest on revenue or general obligation bonds issued by the State if the proceeds of the sale of the bonds will be deposited into the State loan fund; and

(5) to earn interest on the amounts deposited into the State loan fund.

(g) Administration of State loan funds

(1) Combined financial administration

Notwithstanding subsection (c) of this section, a State may (as a convenience and to avoid unnecessary administrative costs) combine, in accordance with State law, the financial administration of a State loan fund established under this section with the financial ad-

ministration of any other revolving fund established by the State if otherwise not prohibited by the law under which the State loan fund was established and if the Administrator determines that—

(A) the grants under this section, together with loan repayments and interest, will be separately accounted for and used solely for the purposes specified in subsection (a) of this section; and

(B) the authority to establish assistance priorities and carry out oversight and related activities (other than financial administration) with respect to assistance remains with the State agency having primary responsibility for administration of the State program under section 300g–2 of this title, after consultation with other appropriate State agencies (as determined by the State): *Provided*, That in nonprimacy States eligible to receive assistance under this section, the Governor shall determine which State agency will have authority to establish priorities for financial assistance from the State loan fund.

(2) Cost of administering fund

Each State may annually use up to 4 percent of the funds allotted to the State under this section to cover the reasonable costs of administration of the programs under this section, including the recovery of reasonable costs expended to establish a State loan fund which are incurred after August 6, 1996, and to provide technical assistance to public water systems within the State. For fiscal year 1995 and each fiscal year thereafter, each State may use up to an additional 10 percent of the funds allotted to the State under this section—

(A) for public water system supervision programs under section 300j–2(a) of this title;

(B) to administer or provide technical assistance through source water protection programs;

(C) to develop and implement a capacity development strategy under section 300g–9(c) of this title; and

(D) for an operator certification program for purposes of meeting the requirements of section 300g–8 of this title,

if the State matches the expenditures with at least an equal amount of State funds. At least half of the match must be additional to the amount expended by the State for public water supervision in fiscal year 1993. An additional 2 percent of the funds annually allotted to each State under this section may be used by the State to provide technical assistance to public water systems serving 10,000 or fewer persons in the State. Funds utilized under subparagraph (B) shall not be used for enforcement actions.

(3) Guidance and regulations

The Administrator shall publish guidance and promulgate regulations as may be necessary to carry out the provisions of this section, including—

(A) provisions to ensure that each State commits and expends funds allotted to the State under this section as efficiently as possible in accordance with this subchapter and applicable State laws;

(B) guidance to prevent waste, fraud, and abuse; and

(C) guidance to avoid the use of funds made available under this section to finance the expansion of any public water system in anticipation of future population growth.

The guidance and regulations shall also ensure that the States, and public water systems receiving assistance under this section, use accounting, audit, and fiscal procedures that conform to generally accepted accounting standards.

(4) State report

Each State administering a loan fund and assistance program under this subsection shall publish and submit to the Administrator a report every 2 years on its activities under this section, including the findings of the most recent audit of the fund and the entire State allotment. The Administrator shall periodically audit all State loan funds established by, and all other amounts allotted to, the States pursuant to this section in accordance with procedures established by the Comptroller General.

(h) Needs survey

The Administrator shall conduct an assessment of water system capital improvement needs of all eligible public water systems in the United States and submit a report to the Congress containing the results of the assessment within 180 days after August 6, 1996, and every 4 years thereafter.

(i) Indian Tribes

(1) In general

1½ percent of the amounts appropriated annually to carry out this section may be used by the Administrator to make grants to Indian Tribes and Alaska Native villages that have not otherwise received either grants from the Administrator under this section or assistance from State loan funds established under this section. The grants may only be used for expenditures by tribes and villages for public water system expenditures referred to in subsection (a)(2) of this section.

(2) Use of funds

Funds reserved pursuant to paragraph (1) shall be used to address the most significant threats to public health associated with public water systems that serve Indian Tribes, as determined by the Administrator in consultation with the Director of the Indian Health Service and Indian Tribes.

(3) Alaska Native villages

In the case of a grant for a project under this subsection in an Alaska Native village, the Administrator is also authorized to make grants to the State of Alaska for the benefit of Native villages. An amount not to exceed 4 percent of the grant amount may be used by the State of Alaska for project management.

(4) Needs assessment

The Administrator, in consultation with the Director of the Indian Health Service and In-

dian Tribes, shall, in accordance with a schedule that is consistent with the needs surveys conducted pursuant to subsection (h) of this section, prepare surveys and assess the needs of drinking water treatment facilities to serve Indian Tribes, including an evaluation of the public water systems that pose the most significant threats to public health.

(j) Other areas

Of the funds annually available under this section for grants to States, the Administrator shall make allotments in accordance with section 300j–2(a)(4) of this title for the Virgin Islands, the Commonwealth of the Northern Mariana Islands, American Samoa, and Guam. The grants allotted as provided in this subsection may be provided by the Administrator to the governments of such areas, to public water systems in such areas, or to both, to be used for the public water system expenditures referred to in subsection (a)(2) of this section. The grants, and grants for the District of Columbia, shall not be deposited in State loan funds. The total allotment of grants under this section for all areas described in this subsection in any fiscal year shall not exceed 0.33 percent of the aggregate amount made available to carry out this section in that fiscal year.

(k) Other authorized activities

(1) In general

Notwithstanding subsection (a)(2) of this section, a State may take each of the following actions:

(A) Provide assistance, only in the form of a loan, to one or more of the following:

(i) Any public water system described in subsection (a)(2) of this section to acquire land or a conservation easement from a willing seller or grantor, if the purpose of the acquisition is to protect the source water of the system from contamination and to ensure compliance with national primary drinking water regulations.

(ii) Any community water system to implement local, voluntary source water protection measures to protect source water in areas delineated pursuant to section 300j–13 of this title, in order to facilitate compliance with national primary drinking water regulations applicable to the system under section 300g–1 of this title or otherwise significantly further the health protection objectives of this subchapter. Funds authorized under this clause may be used to fund only voluntary, incentive-based mechanisms.

(iii) Any community water system to provide funding in accordance with section 300j–14(a)(1)(B)(i) of this title.

(B) Provide assistance, including technical and financial assistance, to any public water system as part of a capacity development strategy developed and implemented in accordance with section 300g–9(c) of this title.

(C) Make expenditures from the capitalization grant of the State for fiscal years 1996 and 1997 to delineate and assess source water protection areas in accordance with section 300j–13 of this title, except that funds set aside for such expenditure shall be obligated within 4 fiscal years.

(D) Make expenditures from the fund for the establishment and implementation of wellhead protection programs under section 300h–7 of this title.

(2) Limitation

For each fiscal year, the total amount of assistance provided and expenditures made by a State under this subsection may not exceed 15 percent of the amount of the capitalization grant received by the State for that year and may not exceed 10 percent of that amount for any one of the following activities:

(A) To acquire land or conservation easements pursuant to paragraph (1)(A)(i).

(B) To provide funding to implement voluntary, incentive-based source water quality protection measures pursuant to clauses (ii) and (iii) of paragraph (1)(A).

(C) To provide assistance through a capacity development strategy pursuant to paragraph (1)(B).

(D) To make expenditures to delineate or assess source water protection areas pursuant to paragraph (1)(C).

(E) To make expenditures to establish and implement wellhead protection programs pursuant to paragraph (1)(D).

(3) Statutory construction

Nothing in this section creates or conveys any new authority to a State, political subdivision of a State, or community water system for any new regulatory measure, or limits any authority of a State, political subdivision of a State or community water system.

***(l)* Savings**

The failure or inability of any public water system to receive funds under this section or any other loan or grant program, or any delay in obtaining the funds, shall not alter the obligation of the system to comply in a timely manner with all applicable drinking water standards and requirements of this subchapter.

(m) Authorization of appropriations

There are authorized to be appropriated to carry out the purposes of this section $599,000,000 for the fiscal year 1994 and $1,000,000,000 for each of the fiscal years 1995 through 2003. To the extent amounts authorized to be appropriated under this subsection in any fiscal year are not appropriated in that fiscal year, such amounts are authorized to be appropriated in a subsequent fiscal year (prior to the fiscal year 2004). Such sums shall remain available until expended.

(n) Health effects studies

From funds appropriated pursuant to this section for each fiscal year, the Administrator shall reserve $10,000,000 for health effects studies on drinking water contaminants authorized by the Safe Drinking Water Act Amendments of 1996. In allocating funds made available under this subsection, the Administrator shall give priority to studies concerning the health effects of cryptosporidium (as authorized by section 300j–18(c) of this title), disinfection byproducts (as authorized by section 300j–18(c) of this title),

and arsenic (as authorized by section 300g–1(b)(12)(A) of this title), and the implementation of a plan for studies of subpopulations at greater risk of adverse effects (as authorized by section 300j–18(a) of this title).

(o) Monitoring for unregulated contaminants

From funds appropriated pursuant to this section for each fiscal year beginning with fiscal year 1998, the Administrator shall reserve $2,000,000 to pay the costs of monitoring for unregulated contaminants under section 300j–4(a)(2)(C) of this title.

(p) Demonstration project for State of Virginia

Notwithstanding the other provisions of this section limiting the use of funds deposited in a State loan fund from any State allotment, the State of Virginia may, as a single demonstration and with the approval of the Virginia General Assembly and the Administrator, conduct a program to demonstrate alternative approaches to intergovernmental coordination to assist in the financing of new drinking water facilities in the following rural communities in southwestern Virginia where none exists on August 6, 1996, and where such communities are experiencing economic hardship: Lee County, Wise County, Scott County, Dickenson County, Russell County, Buchanan County, Tazewell County, and the city of Norton, Virginia. The funds allotted to that State and deposited in the State loan fund may be loaned to a regional endowment fund for the purpose set forth in this subsection under a plan to be approved by the Administrator. The plan may include an advisory group that includes representatives of such counties.

(q) Small system technical assistance

The Administrator may reserve up to 2 percent of the total funds appropriated pursuant to subsection (m) of this section for each of the fiscal years 1997 through 2003 to carry out the provisions of section 300j–1(e) of this title (relating to technical assistance for small systems), except that the total amount of funds made available for such purpose in any fiscal year through appropriations (as authorized by section 300j–1(e) of this title) and reservations made pursuant to this subsection shall not exceed the amount authorized by section 300j–1(e) of this title.

(r) Evaluation

The Administrator shall conduct an evaluation of the effectiveness of the State loan funds through fiscal year 2001. The evaluation shall be submitted to the Congress at the same time as the President submits to the Congress, pursuant to section 1108 of title 31, an appropriations request for fiscal year 2003 relating to the budget of the Environmental Protection Agency.

(July 1, 1944, ch. 373, title XIV, § 1452, as added Pub. L. 104–182, title I, § 130, Aug. 6, 1996, 110 Stat. 1662.)

REFERENCES IN TEXT

The Safe Drinking Water Act Amendments of 1996, referred to in subsec. (n), is Pub. L. 104–182, Aug. 6, 1996, 110 Stat. 1613. For complete classification of this Act to the Code, see Short Title of 1996 Amendment note set out under section 201 of this title and Tables.

COMBINING FUND ASSETS FOR ENHANCEMENT OF LENDING CAPACITY

Pub. L. 105–276, title III, Oct. 21, 1998, 112 Stat. 2498, provided in part: "That, consistent with section 1452(g) of the Safe Drinking Water Act (42 U.S.C. 300j–12(g)), section 302 of the Safe Drinking Water Act Amendments of 1996 (Public Law 104–182) [set out as a note below] and the accompanying joint explanatory statement of the committee of conference (H. Rept. No. 104–741 to accompany S. 1316, the Safe Drinking Water Act Amendments of 1996), and notwithstanding any other provision of law, beginning in fiscal year 1999 and thereafter, States may combine the assets of State Revolving Funds (SRFs) established under section 1452 of the Safe Drinking Water Act, as amended, and title VI of the Federal Water Pollution Control Act [33 U.S.C. 1381 et seq.], as amended, as security for bond issues to enhance the lending capacity of one or both SRFs, but not to acquire the state match for either program, provided that revenues from the bonds are allocated to the purposes of the Safe Drinking Water Act [this subchapter] and the Federal Water Pollution Control Act [33 U.S.C. 1251 et seq.] in the same portion as the funds are used as security for the bonds".

TRANSFER OF FUNDS

Pub. L. 109–54, title II, Aug. 2, 2005, 119 Stat. 530, provided in part: "That for fiscal year 2006 and thereafter, State authority under section 302(a) of Public Law 104–182 [set out as a note below] shall remain in effect".

Similar provisions were contained in the following prior appropriation acts:

Pub. L. 108–447, div. I, title III, Dec. 8, 2004, 118 Stat. 3330.

Pub. L. 108–199, div. G, title III, Jan. 23, 2004, 118 Stat. 406.

Pub. L. 108–7, div. K, title III, Feb. 20, 2003, 117 Stat. 512.

Pub. L. 107–73, title III, Nov. 26, 2001, 115 Stat. 685.

Section 302 of Pub. L. 104–182 provided that:

"(a) IN GENERAL.—Notwithstanding any other provision of law, at any time after the date 1 year after a State establishes a State loan fund pursuant to section 1452 of the Safe Drinking Water Act [this section] but prior to fiscal year 2002, a Governor of the State may—

"(1) reserve up to 33 percent of a capitalization grant made pursuant to such section 1452 and add the funds reserved to any funds provided to the State pursuant to section 601 of the Federal Water Pollution Control Act (33 U.S.C. 1381); and

"(2) reserve in any year a dollar amount up to the dollar amount that may be reserved under paragraph (1) for that year from capitalization grants made pursuant to section 601 of such Act (33 U.S.C. 1381) and add the reserved funds to any funds provided to the State pursuant to section 1452 of the Safe Drinking Water Act.

"(b) REPORT.—Not later than 4 years after the date of enactment of this Act [Aug. 6, 1996], the Administrator shall submit a report to the Congress regarding the implementation of this section, together with the Administrator's recommendations, if any, for modifications or improvement.

"(c) STATE MATCH.—Funds reserved pursuant to this section shall not be considered to be a State match of a capitalization grant required pursuant to section 1452 of the Safe Drinking Water Act or the Federal Water Pollution Control Act (33 U.S.C. 1251 et seq.)."

§ 300j–13. Source water quality assessment

(a) Source water assessment

(1) Guidance

Within 12 months after August 6, 1996, after notice and comment, the Administrator shall publish guidance for States exercising primary enforcement responsibility for public water systems to carry out directly or through dele-

gation (for the protection and benefit of public water systems and for the support of monitoring flexibility) a source water assessment program within the State's boundaries. Each State adopting modifications to monitoring requirements pursuant to section 300g–7(b) of this title shall, prior to adopting such modifications, have an approved source water assessment program under this section and shall carry out the program either directly or through delegation.

(2) Program requirements

A source water assessment program under this subsection shall—

(A) delineate the boundaries of the assessment areas in such State from which one or more public water systems in the State receive supplies of drinking water, using all reasonably available hydrogeologic information on the sources of the supply of drinking water in the State and the water flow, recharge, and discharge and any other reliable information as the State deems necessary to adequately determine such areas; and

(B) identify for contaminants regulated under this subchapter for which monitoring is required under this subchapter (or any unregulated contaminants selected by the State, in its discretion, which the State, for the purposes of this subsection, has determined may present a threat to public health), to the extent practical, the origins within each delineated area of such contaminants to determine the susceptibility of the public water systems in the delineated area to such contaminants.

(3) Approval, implementation, and monitoring relief

A State source water assessment program under this subsection shall be submitted to the Administrator within 18 months after the Administrator's guidance is issued under this subsection and shall be deemed approved 9 months after the date of such submittal unless the Administrator disapproves the program as provided in section 300h–7(c) of this title. States shall begin implementation of the program immediately after its approval. The Administrator's approval of a State program under this subsection shall include a timetable, established in consultation with the State, allowing not more than 2 years for completion after approval of the program. Public water systems seeking monitoring relief in addition to the interim relief provided under section 300g–7(a) of this title shall be eligible for monitoring relief, consistent with section 300g–7(b) of this title, upon completion of the assessment in the delineated source water assessment area or areas concerned.

(4) Timetable

The timetable referred to in paragraph (3) shall take into consideration the availability to the State of funds under section 300j–12 of this title (relating to State loan funds) for assessments and other relevant factors. The Administrator may extend any timetable included in a State program approved under paragraph (3) to extend the period for completion by an additional 18 months.

(5) Demonstration project

The Administrator shall, as soon as practicable, conduct a demonstration project, in consultation with other Federal agencies, to demonstrate the most effective and protective means of assessing and protecting source waters serving large metropolitan areas and located on Federal lands.

(6) Use of other programs

To avoid duplication and to encourage efficiency, the program under this section may make use of any of the following:

(A) Vulnerability assessments, sanitary surveys, and monitoring programs.

(B) Delineations or assessments of ground water sources under a State wellhead protection program developed pursuant to this section.

(C) Delineations or assessments of surface or ground water sources under a State pesticide management plan developed pursuant to the Pesticide and Ground Water State Management Plan Regulation (subparts I and J of part 152 of title 40, Code of Federal Regulations), promulgated under section 136a(d) of title 7.

(D) Delineations or assessments of surface water sources under a State watershed initiative or to satisfy the watershed criterion for determining if filtration is required under the Surface Water Treatment Rule (section 141.70 of title 40, Code of Federal Regulations).

(E) Delineations or assessments of surface or ground water sources under programs or plans pursuant to the Federal Water Pollution Control Act [33 U.S.C. 1251 et seq.].

(7) Public availability

The State shall make the results of the source water assessments conducted under this subsection available to the public.

(b) Approval and disapproval

For provisions relating to program approval and disapproval, see section 300h–7(c) of this title.

(July 1, 1944, ch. 373, title XIV, §1453, as added Pub. L. 104–182, title I, §132(a), Aug. 6, 1996, 110 Stat. 1673.)

REFERENCES IN TEXT

The Federal Water Pollution Control Act, referred to in subsec. (a)(6)(E), is act June 30, 1948, ch. 758, as amended generally by Pub. L. 92–500, §2, Oct. 18, 1972, 86 Stat. 816, which is classified generally to chapter 26 (§1251 et seq.) of Title 33, Navigation and Navigable Waters. For complete classification of this Act to the Code, see Short Title note set out under section 1251 of Title 33 and Tables.

§ 300j–14. Source water petition program

(a) Petition program

(1) In general

(A) Establishment

A State may establish a program under which an owner or operator of a community water system in the State, or a municipal or local government or political subdivision of a State, may submit a source water quality

protection partnership petition to the State requesting that the State assist in the local development of a voluntary, incentive-based partnership, among the owner, operator, or government and other persons likely to be affected by the recommendations of the partnership, to—

(i) reduce the presence in drinking water of contaminants that may be addressed by a petition by considering the origins of the contaminants, including to the maximum extent practicable the specific activities that affect the drinking water supply of a community;

(ii) obtain financial or technical assistance necessary to facilitate establishment of a partnership, or to develop and implement recommendations of a partnership for the protection of source water to assist in the provision of drinking water that complies with national primary drinking water regulations with respect to contaminants addressed by a petition; and

(iii) develop recommendations regarding voluntary and incentive-based strategies for the long-term protection of the source water of community water systems.

(B) Funding

Each State may—

(i) use funds set aside pursuant to section 300j–12(k)(1)(A)(iii) of this title by the State to carry out a program described in subparagraph (A), including assistance to voluntary local partnerships for the development and implementation of partnership recommendations for the protection of source water such as source water quality assessment, contingency plans, and demonstration projects for partners within a source water area delineated under section 300j–13(a) of this title; and

(ii) provide assistance in response to a petition submitted under this subsection using funds referred to in subsection (b)(2)(B) of this section.

(2) Objectives

The objectives of a petition submitted under this subsection shall be to—

(A) facilitate the local development of voluntary, incentive-based partnerships among owners and operators of community water systems, governments, and other persons in source water areas; and

(B) obtain assistance from the State in identifying resources which are available to implement the recommendations of the partnerships to address the origins of drinking water contaminants that may be addressed by a petition (including to the maximum extent practicable the specific activities contributing to the presence of the contaminants) that affect the drinking water supply of a community.

(3) Contaminants addressed by a petition

A petition submitted to a State under this subsection may address only those contaminants—

(A) that are pathogenic organisms for which a national primary drinking water regulation has been established or is required under section 300g–1 of this title; or

(B) for which a national primary drinking water regulation has been promulgated or proposed and that are detected by adequate monitoring methods in the source water at the intake structure or in any collection, treatment, storage, or distribution facilities by the community water systems at levels—

(i) above the maximum contaminant level; or

(ii) that are not reliably and consistently below the maximum contaminant level.

(4) Contents

A petition submitted under this subsection shall, at a minimum—

(A) include a delineation of the source water area in the State that is the subject of the petition;

(B) identify, to the maximum extent practicable, the origins of the drinking water contaminants that may be addressed by a petition (including to the maximum extent practicable the specific activities contributing to the presence of the contaminants) in the source water area delineated under section 300j–13 of this title;

(C) identify any deficiencies in information that will impair the development of recommendations by the voluntary local partnership to address drinking water contaminants that may be addressed by a petition;

(D) specify the efforts made to establish the voluntary local partnership and obtain the participation of—

(i) the municipal or local government or other political subdivision of the State with jurisdiction over the source water area delineated under section 300j–13 of this title; and

(ii) each person in the source water area delineated under section 300j–13 of this title—

(I) who is likely to be affected by recommendations of the voluntary local partnership; and

(II) whose participation is essential to the success of the partnership;

(E) outline how the voluntary local partnership has or will, during development and implementation of recommendations of the voluntary local partnership, identify, recognize and take into account any voluntary or other activities already being undertaken by persons in the source water area delineated under section 300j–13 of this title under Federal or State law to reduce the likelihood that contaminants will occur in drinking water at levels of public health concern; and

(F) specify the technical, financial, or other assistance that the voluntary local partnership requests of the State to develop the partnership or to implement recommendations of the partnership.

(b) Approval or disapproval of petitions

(1) In general

After providing notice and an opportunity for public comment on a petition submitted under subsection (a) of this section, the State

shall approve or disapprove the petition, in whole or in part, not later than 120 days after the date of submission of the petition.

(2) Approval

The State may approve a petition if the petition meets the requirements established under subsection (a) of this section. The notice of approval shall, at a minimum, include for informational purposes—

(A) an identification of technical, financial, or other assistance that the State will provide to assist in addressing the drinking water contaminants that may be addressed by a petition based on—

(i) the relative priority of the public health concern identified in the petition with respect to the other water quality needs identified by the State;

(ii) any necessary coordination that the State will perform of the program established under this section with programs implemented or planned by other States under this section; and

(iii) funds available (including funds available from a State revolving loan fund established under title VI of the Federal Water Pollution Control Act (33 U.S.C. 1381 et seq.)) or section 300j–12 of this title;

(B) a description of technical or financial assistance pursuant to Federal and State programs that is available to assist in implementing recommendations of the partnership in the petition, including—

(i) any program established under the Federal Water Pollution Control Act (33 U.S.C. 1251 et seq.);

(ii) the program established under section 1455b of title 16;

(iii) the agricultural water quality protection program established under chapter 2 of subtitle D of title XII of the Food Security Act of 1985 (16 U.S.C. 3838 et seq.);

(iv) the sole source aquifer protection program established under section 300h–6 of this title;

(v) the community wellhead protection program established under section 300h–7 of this title;

(vi) any pesticide or ground water management plan;

(vii) any voluntary agricultural resource management plan or voluntary whole farm or whole ranch management plan developed and implemented under a process established by the Secretary of Agriculture; and

(viii) any abandoned well closure program; and

(C) a description of activities that will be undertaken to coordinate Federal and State programs to respond to the petition.

(3) Disapproval

If the State disapproves a petition submitted under subsection (a) of this section, the State shall notify the entity submitting the petition in writing of the reasons for disapproval. A petition may be resubmitted at any time if—

(A) new information becomes available;

(B) conditions affecting the source water that is the subject of the petition change; or

(C) modifications are made in the type of assistance being requested.

(c) Grants to support State programs

(1) In general

The Administrator may make a grant to each State that establishes a program under this section that is approved under paragraph (2). The amount of each grant shall not exceed 50 percent of the cost of administering the program for the year in which the grant is available.

(2) Approval

In order to receive grant assistance under this subsection, a State shall submit to the Administrator for approval a plan for a source water quality protection partnership program that is consistent with the guidance published under subsection (d) of this section. The Administrator shall approve the plan if the plan is consistent with the guidance published under subsection (d) of this section.

(d) Guidance

(1) In general

Not later than 1 year after August 6, 1996, the Administrator, in consultation with the States, shall publish guidance to assist—

(A) States in the development of a source water quality protection partnership program; and

(B) municipal or local governments or political subdivisions of a State and community water systems in the development of source water quality protection partnerships and in the assessment of source water quality.

(2) Contents of the guidance

The guidance shall, at a minimum—

(A) recommend procedures for the approval or disapproval by a State of a petition submitted under subsection (a) of this section;

(B) recommend procedures for the submission of petitions developed under subsection (a) of this section;

(C) recommend criteria for the assessment of source water areas within a State; and

(D) describe technical or financial assistance pursuant to Federal and State programs that is available to address the contamination of sources of drinking water and to develop and respond to petitions submitted under subsection (a) of this section.

(e) Authorization of appropriations

There are authorized to be appropriated to carry out this section $5,000,000 for each of the fiscal years 1997 through 2003. Each State with a plan for a program approved under subsection (b) of this section shall receive an equitable portion of the funds available for any fiscal year.

(f) Statutory construction

Nothing in this section—

(1)(A) creates or conveys new authority to a State, political subdivision of a State, or community water system for any new regulatory measure; or

(B) limits any authority of a State, political subdivision, or community water system; or

(2) precludes a community water system, municipal or local government, or political subdivision of a government from locally developing and carrying out a voluntary, incentive-based, source water quality protection partnership to address the origins of drinking water contaminants of public health concern.

(July 1, 1944, ch. 373, title XIV, §1454, as added Pub. L. 104–182, title I, §133(a), Aug. 6, 1996, 110 Stat. 1675.)

REFERENCES IN TEXT

The Federal Water Pollution Control Act, referred to in subsec. (b)(2)(A)(iii), (B)(i), is act June 30, 1948, ch. 758, as amended generally by Pub. L. 92–500, §2, Oct. 18, 1972, 86 Stat. 816, which is classified generally to chapter 26 (§1251 et seq.) of Title 33, Navigation and Navigable Waters. Title VI of the Act is classified generally to subchapter VI (§1381 et seq.) of chapter 26 of Title 33. For complete classification of this Act to the Code, see Short Title note set out under section 1251 of Title 33 and Tables.

The Food Security Act of 1985, referred to in subsec. (b)(2)(B)(iii), is Pub. L. 99–198, Dec. 23, 1985, 99 Stat. 1354, as amended. Chapter 2 of subtitle D of title XII of the Act was classified generally to part II (§3838 et seq.) of subchapter IV of chapter 58 of Title 16, Conservation, prior to repeal by Pub. L. 104–127, title III, §336(h), Apr. 4, 1996, 110 Stat. 1007. For complete classification of this Act to the Code, see Short Title of 1985 Amendment note set out under section 1281 of Title 7, Agriculture, and Tables.

§300j–15. Water conservation plan

(a) Guidelines

Not later than 2 years after August 6, 1996, the Administrator shall publish in the Federal Register guidelines for water conservation plans for public water systems serving fewer than 3,300 persons, public water systems serving between 3,300 and 10,000 persons, and public water systems serving more than 10,000 persons, taking into consideration such factors as water availability and climate.

(b) Loans or grants

Within 1 year after publication of the guidelines under subsection (a) of this section, a State exercising primary enforcement responsibility for public water systems may require a public water system, as a condition of receiving a loan or grant from a State loan fund under section 300j–12 of this title, to submit with its application for such loan or grant a water conservation plan consistent with such guidelines.

(July 1, 1944, ch. 373, title XIV, §1455, as added Pub. L. 104–182, title I, §134, Aug. 6, 1996, 110 Stat. 1679.)

§300j–16. Assistance to colonias

(a) Definitions

As used in this section:

(1) Border State

The term "border State" means Arizona, California, New Mexico, and Texas.

(2) Eligible community

The term "eligible community" means a low-income community with economic hardship that—

(A) is commonly referred to as a colonia;

(B) is located along the United States-Mexico border (generally in an unincorporated area); and

(C) lacks a safe drinking water supply or adequate facilities for the provision of safe drinking water for human consumption.

(b) Grants to alleviate health risks

The Administrator of the Environmental Protection Agency and the heads of other appropriate Federal agencies are authorized to award grants to a border State to provide assistance to eligible communities to facilitate compliance with national primary drinking water regulations or otherwise significantly further the health protection objectives of this subchapter.

(c) Use of funds

Each grant awarded pursuant to subsection (b) of this section shall be used to provide assistance to one or more eligible communities with respect to which the residents are subject to a significant health risk (as determined by the Administrator or the head of the Federal agency making the grant) attributable to the lack of access to an adequate and affordable drinking water supply system.

(d) Cost sharing

The amount of a grant awarded pursuant to this section shall not exceed 50 percent of the costs of carrying out the project that is the subject of the grant.

(e) Authorization of appropriations

There are authorized to be appropriated to carry out this section $25,000,000 for each of the fiscal years 1997 through 1999.

(July 1, 1944, ch. 373, title XIV, §1456, as added Pub. L. 104–182, title I, §135, Aug. 6, 1996, 110 Stat. 1679.)

§300j–17. Estrogenic substances screening program

In addition to the substances referred to in section 346a(p)(3)(B) of title 21 the Administrator may provide for testing under the screening program authorized by section 346a(p) of title 21, in accordance with the provisions of section 346a(p) of title 21, of any other substance that may be found in sources of drinking water if the Administrator determines that a substantial population may be exposed to such substance.

(July 1, 1944, ch. 373, title XIV, §1457, as added Pub. L. 104–182, title I, §136, Aug. 6, 1996, 110 Stat. 1680.)

§300j–18. Drinking water studies

(a) Subpopulations at greater risk

(1) In general

The Administrator shall conduct a continuing program of studies to identify groups within the general population that may be at greater risk than the general population of adverse health effects from exposure to contaminants in drinking water. The study shall examine whether and to what degree infants, children, pregnant women, the elderly, individuals with a history of serious illness, or

other subpopulations that can be identified and characterized are likely to experience elevated health risks, including risks of cancer, from contaminants in drinking water.

(2) Report

Not later than 4 years after August 6, 1996, and periodically thereafter as new and significant information becomes available, the Administrator shall report to the Congress on the results of the studies.

(b) Biological mechanisms

The Administrator shall conduct biomedical studies to—

(1) understand the mechanisms by which chemical contaminants are absorbed, distributed, metabolized, and eliminated from the human body, so as to develop more accurate physiologically based models of the phenomena;

(2) understand the effects of contaminants and the mechanisms by which the contaminants cause adverse effects (especially noncancer and infectious effects) and the variations in the effects among humans, especially subpopulations at greater risk of adverse effects, and between test animals and humans; and

(3) develop new approaches to the study of complex mixtures, such as mixtures found in drinking water, especially to determine the prospects for synergistic or antagonistic interactions that may affect the shape of the dose-response relationship of the individual chemicals and microbes, and to examine noncancer endpoints and infectious diseases, and susceptible individuals and subpopulations.

(c) Studies on harmful substances in drinking water

(1) Development of studies

The Administrator shall, not later than 180 days after August 6, 1996, and after consultation with the Secretary of Health and Human Services, the Secretary of Agriculture, and, as appropriate, the heads of other Federal agencies, conduct the studies described in paragraph (2) to support the development and implementation of the most current version of each of the following:

(A) Enhanced Surface Water Treatment Rule (59 Fed. Reg. 38832 (July 29, 1994)).

(B) Disinfectant and Disinfection Byproducts Rule (59 Fed. Reg. 38668 (July 29, 1994)).

(C) Ground Water Disinfection Rule (availability of draft summary announced at (57 Fed. Reg. 33960; July 31, 1992)).

(2) Contents of studies

The studies required by paragraph (1) shall include, at a minimum, each of the following:

(A) Toxicological studies and, if warranted, epidemiological studies to determine what levels of exposure from disinfectants and disinfection byproducts, if any, may be associated with developmental and birth defects and other potential toxic end points.

(B) Toxicological studies and, if warranted, epidemiological studies to quantify the carcinogenic potential from exposure to disinfection byproducts resulting from different disinfectants.

(C) The development of dose-response curves for pathogens, including cryptosporidium and the Norwalk virus.

(3) Authorization of appropriations

There are authorized to be appropriated to carry out this subsection $12,500,000 for each of fiscal years 1997 through 2003.

(d) Waterborne disease occurrence study

(1) System

The Director of the Centers for Disease Control and Prevention, and the Administrator shall jointly—

(A) within 2 years after August 6, 1996, conduct pilot waterborne disease occurrence studies for at least 5 major United States communities or public water systems; and

(B) within 5 years after August 6, 1996, prepare a report on the findings of the pilot studies, and a national estimate of waterborne disease occurrence.

(2) Training and education

The Director and Administrator shall jointly establish a national health care provider training and public education campaign to inform both the professional health care provider community and the general public about waterborne disease and the symptoms that may be caused by infectious agents, including microbial contaminants. In developing such a campaign, they shall seek comment from interested groups and individuals, including scientists, physicians, State and local governments, environmental groups, public water systems, and vulnerable populations.

(3) Funding

There are authorized to be appropriated for each of the fiscal years 1997 through 2001, $3,000,000 to carry out this subsection. To the extent funds under this subsection are not fully appropriated, the Administrator may use not more than $2,000,000 of the funds from amounts reserved under section 300j–12(n) of this title for health effects studies for purposes of this subsection. The Administrator may transfer a portion of such funds to the Centers for Disease Control and Prevention for such purposes.

(July 1, 1944, ch. 373, title XIV, §1458, as added Pub. L. 104–182, title I, §137, Aug. 6, 1996, 110 Stat. 1680.)

PUBLIC HEALTH ASSESSMENT OF EXPOSURE TO PERCHLORATE

Pub. L. 108–136, div. A, title III, §323, Nov. 24, 2003, 117 Stat. 1440, provided that:

"(a) EPIDEMIOLOGICAL STUDY OF EXPOSURE TO PERCHLORATE.—The Secretary of Defense shall provide for an independent epidemiological study of exposure to perchlorate in drinking water. The entity conducting the study shall—

"(1) assess the incidence of thyroid disease and measurable effects of thyroid function in relation to exposure to perchlorate;

"(2) ensure that the study is of sufficient scope and scale to permit the making of meaningful conclusions of the measurable public health threat associated with exposure to perchlorate, especially the threat to sensitive subpopulations; and

"(3) examine thyroid function, including measurements of urinary iodine and thyroid hormone levels,

in a sufficient number of pregnant women, neonates, and infants exposed to perchlorate in drinking water and match measurements of perchlorate levels in the drinking water of each study participant in order to permit the development of meaningful conclusions on the public health threat to individuals exposed to perchlorate.

"(b) REVIEW OF EFFECTS OF PERCHLORATE ON ENDOCRINE SYSTEM.—The Secretary shall provide for an independent review of the effects of perchlorate on the human endocrine system. The entity conducting the review shall assess—

"(1) available data on human exposure to perchlorate, including clinical data and data on exposure of sensitive subpopulations, and the levels at which health effects were observed; and

"(2) available data on other substances that have endocrine effects similar to perchlorate to which the public is frequently exposed.

"(c) PERFORMANCE OF STUDY AND REVIEW.—(1) The Secretary shall provide for the performance of the study under subsection (a) through the Centers for Disease Control and Prevention, the National Institutes of Health, or another Federal entity with experience in environmental toxicology selected by the Secretary.

"(2) The Secretary shall provide for the performance of the review under subsection (b) through the Centers for Disease Control and Prevention, the National Institutes of Health, or another appropriate Federal research entity with experience in human endocrinology selected by the Secretary. The Secretary shall ensure that the panel conducting the review is composed of individuals with expertise in human endocrinology.

"(d) REPORTING REQUIREMENTS.—Not later than June 1, 2005, the Federal entities conducting the study and review under this section shall submit to the Secretary reports containing the results of the study and review."

PART F—ADDITIONAL REQUIREMENTS TO REGULATE SAFETY OF DRINKING WATER

§ 300j–21. Definitions

As used in this part—

(1) Drinking water cooler

The term "drinking water cooler" means any mechanical device affixed to drinking water supply plumbing which actively cools water for human consumption.

(2) Lead free

The term "lead free" means, with respect to a drinking water cooler, that each part or component of the cooler which may come in contact with drinking water contains not more than 8 percent lead, except that no drinking water cooler which contains any solder, flux, or storage tank interior surface which may come in contact with drinking water shall be considered lead free if the solder, flux, or storage tank interior surface contains more than 0.2 percent lead. The Administrator may establish more stringent requirements for treating any part or component of a drinking water cooler as lead free for purposes of this part whenever he determines that any such part may constitute an important source of lead in drinking water.

(3) Local educational agency

The term "local educational agency" means—

(A) any local educational agency as defined in section 7801 of title 20,

(B) the owner of any private, nonprofit elementary or secondary school building, and

(C) the governing authority of any school operating under the defense dependent's education system provided for under the Defense Dependent's Education Act of 1978 (20 U.S.C. 921 and following).

(4) Repair

The term "repair" means, with respect to a drinking water cooler, to take such corrective action as is necessary to ensure that water cooler is lead free.

(5) Replacement

The term "replacement", when used with respect to a drinking water cooler, means the permanent removal of the water cooler and the installation of a lead free water cooler.

(6) School

The term "school" means any elementary school or secondary school as defined in section 7801 of title 20 and any kindergarten or day care facility.

(7) Lead-lined tank

The term "lead-lined tank" means a water reservoir container in a drinking water cooler which container is constructed of lead or which has an interior surface which is not lead free.

(July 1, 1944, ch. 373, title XIV, § 1461, as added Pub. L. 100–572, § 2(a), Oct. 31, 1988, 102 Stat. 2884; amended Pub. L. 103–382, title III, § 391(p), Oct. 20, 1994, 108 Stat. 4024; Pub. L. 104–182, title V, § 501(f)(7), Aug. 6, 1996, 110 Stat. 1692; Pub. L. 107–110, title X, § 1076(x), Jan. 8, 2002, 115 Stat. 2093.)

REFERENCES IN TEXT

The Defense Dependent's Education Act of 1978, referred to in par. (3)(C), probably means the Defense Dependents' Education Act of 1978, title XIV of Pub. L. 95–561, Nov. 1, 1978, 92 Stat. 2365, as amended, which is classified principally to chapter 25A (§ 921 et seq.) of Title 20, Education. For complete classification of this Act to the Code, see Short Title note set out under section 921 of Title 20 and Tables.

AMENDMENTS

2002—Pars. (3)(A), (6). Pub. L. 107–110 substituted "section 7801 of title 20" for "section 8801 of title 20".

1996—Pub. L. 104–182 made technical amendment to section catchline and first word of text.

1994—Par. (3)(A). Pub. L. 103–382, § 391(p)(1), substituted "section 8801 of title 20" for "section 198 of the Elementary and Secondary Education Act of 1965 (20 U.S.C. 3381)".

Par. (6). Pub. L. 103–382, § 391(p)(2), substituted "section 8801 of title 20" for "section 198 of the Elementary and Secondary Education Act of 1965 (20 U.S.C. 2854)".

EFFECTIVE DATE OF 2002 AMENDMENT

Amendment by Pub. L. 107–110 effective Jan. 8, 2002, except with respect to certain noncompetitive programs and competitive programs, see section 5 of Pub. L. 107–110, set out as an Effective Date note under section 6301 of Title 20, Education.

§ 300j–22. Recall of drinking water coolers with lead-lined tanks

For purposes of the Consumer Product Safety Act [15 U.S.C. 2051 et seq.], all drinking water coolers identified by the Administrator on the list under section 300j–23 of this title as having

a lead-lined tank shall be considered to be imminently hazardous consumer products within the meaning of section 12 of such Act (15 U.S.C. 2061). After notice and opportunity for comment, including a public hearing, the Consumer Product Safety Commission shall issue an order requiring the manufacturers and importers of such coolers to repair, replace, or recall and provide a refund for such coolers within 1 year after October 31, 1988. For purposes of enforcement, such order shall be treated as an order under section 15(d) of that Act (15 U.S.C. 2064(d)).

(July 1, 1944, ch. 373, title XIV, § 1462, as added Pub. L. 100–572, § 2(a), Oct. 31, 1988, 102 Stat. 2885; amended Pub. L. 104–182, title V, § 501(f)(8), Aug. 6, 1996, 110 Stat. 1692.)

REFERENCES IN TEXT

The Consumer Product Safety Act, referred to in text, is Pub. L. 92–573, Oct. 27, 1972, 86 Stat. 1207, as amended, which is classified generally to chapter 47 (§ 2051 et seq.) of Title 15, Commerce and Trade. For complete classification of this Act to the Code, see Short Title note set out under section 2051 of Title 15 and Tables.

AMENDMENTS

1996—Pub. L. 104–182 made technical amendment to section catchline and first word of text.

§ 300j–23. Drinking water coolers containing lead

(a) Publication of lists

The Administrator shall, after notice and opportunity for public comment, identify each brand and model of drinking water cooler which is not lead free, including each brand and model of drinking water cooler which has a lead-lined tank. For purposes of identifying the brand and model of drinking water coolers under this subsection, the Administrator shall use the best information available to the Environmental Protection Agency. Within 100 days after October 31, 1988, the Administrator shall publish a list of each brand and model of drinking water cooler identified under this subsection. Such list shall separately identify each brand and model of cooler which has a lead-lined tank. The Administrator shall continue to gather information regarding lead in drinking water coolers and shall revise and republish the list from time to time as may be appropriate as new information or analysis becomes available regarding lead contamination in drinking water coolers.

(b) Prohibition

No person may sell in interstate commerce, or manufacture for sale in interstate commerce, any drinking water cooler listed under subsection (a) of this section or any other drinking water cooler which is not lead free, including a lead-lined drinking water cooler.

(c) Criminal penalty

Any person who knowingly violates the prohibition contained in subsection (b) of this section shall be imprisoned for not more than 5 years, or fined in accordance with title 18, or both.

(d) Civil penalty

The Administrator may bring a civil action in the appropriate United States District Court (as determined under the provisions of title 28) to impose a civil penalty on any person who violates subsection (b) of this section. In any such action the court may impose on such person a civil penalty of not more than $5,000 ($50,000 in the case of a second or subsequent violation).

(July 1, 1944, ch. 373, title XIV, § 1463, as added Pub. L. 100–572, § 2(a), Oct. 31, 1988, 102 Stat. 2885; amended Pub. L. 104–182, title V, § 501(f)(9), Aug. 6, 1996, 110 Stat. 1692.)

AMENDMENTS

1996—Pub. L. 104–182 made technical amendment to section catchline and subsec. (a) designation.

§ 300j–24. Lead contamination in school drinking water

(a) Distribution of drinking water cooler list

Within 100 days after October 31, 1988, the Administrator shall distribute to the States a list of each brand and model of drinking water cooler identified and listed by the Administrator under section 300j–23(a) of this title.

(b) Guidance document and testing protocol

The Administrator shall publish a guidance document and a testing protocol to assist schools in determining the source and degree of lead contamination in school drinking water supplies and in remedying such contamination. The guidance document shall include guidelines for sample preservation. The guidance document shall also include guidance to assist States, schools, and the general public in ascertaining the levels of lead contamination in drinking water coolers and in taking appropriate action to reduce or eliminate such contamination. The guidance document shall contain a testing protocol for the identification of drinking water coolers which contribute to lead contamination in drinking water. Such document and protocol may be revised, republished and redistributed as the Administrator deems necessary. The Administrator shall distribute the guidance document and testing protocol to the States within 100 days after October 31, 1988.

(c) Dissemination to schools, etc.

Each State shall provide for the dissemination to local educational agencies, private nonprofit elementary or secondary schools and to day care centers of the guidance document and testing protocol published under subsection (b) of this section, together with the list of drinking water coolers published under section 300j–23(a) of this title.

(d) Remedial action program

(1) Testing and remedying lead contamination

Within 9 months after October 31, 1988, each State shall establish a program, consistent with this section, to assist local educational agencies in testing for, and remedying, lead contamination in drinking water from coolers and from other sources of lead contamination at schools under the jurisdiction of such agencies.

(2) Public availability

A copy of the results of any testing under paragraph (1) shall be available in the administrative offices of the local educational agen-

cy for inspection by the public, including teachers, other school personnel, and parents. The local educational agency shall notify parent, teacher, and employee organizations of the availability of such testing results.

(3) Coolers

In the case of drinking water coolers, such program shall include measures for the reduction or elimination of lead contamination from those water coolers which are not lead free and which are located in schools. Such measures shall be adequate to ensure that within 15 months after October 31, 1988, all such water coolers in schools under the jurisdiction of such agencies are repaired, replaced, permanently removed, or rendered inoperable unless the cooler is tested and found (within the limits of testing accuracy) not to contribute lead to drinking water.

(July 1, 1944, ch. 373, title XIV, § 1464, as added Pub. L. 100–572, § 2(a), Oct. 31, 1988, 102 Stat. 2886; amended Pub. L. 104–182, title V, § 501(f)(10), Aug. 6, 1996, 110 Stat. 1692.)

AMENDMENTS

1996—Pub. L. 104–182 made technical amendment to section catchline and subsec. (a) designation.

§ 300j–25. Federal assistance for State programs regarding lead contamination in school drinking water

(a) School drinking water programs

The Administrator shall make grants to States to establish and carry out State programs under section 300j–24 of this title to assist local educational agencies in testing for, and remedying, lead contamination in drinking water from drinking water coolers and from other sources of lead contamination at schools under the jurisdiction of such agencies. Such grants may be used by States to reimburse local educational agencies for expenses incurred after October 31, 1988, for such testing and remedial action.

(b) Limits

Each grant under this section shall be used by the State for testing water coolers in accordance with section 300j–24 of this title, for testing for lead contamination in other drinking water supplies under section 300j–24 of this title, or for remedial action under State programs under section 300j–24 of this title. Not more than 5 percent of the grant may be used for program administration.

(c) Authorization of appropriations

There are authorized to be appropriated to carry out this section not more than $30,000,000 for fiscal year 1989, $30,000,000 for fiscal year 1990, and $30,000,000 for fiscal year 1991.

(July 1, 1944, ch. 373, title XIV, § 1465, as added Pub. L. 100–572, § 2(a), Oct. 31, 1988, 102 Stat. 2887; amended Pub. L. 104–182, title V, § 501(d), (f)(11), Aug. 6, 1996, 110 Stat. 1691, 1692.)

AMENDMENTS

1996—Pub. L. 104–182, § 501(f)(11), made technical amendment to section catchline and subsec. (a) designation.

Subsec. (b). Pub. L. 104–182, § 501(d), substituted "by the State" for "as by the State".

§ 300j–26. Certification of testing laboratories

The Administrator of the Environmental Protection Agency shall assure that programs for the certification of testing laboratories which test drinking water supplies for lead contamination certify only those laboratories which provide reliable accurate testing. The Administrator (or the State in the case of a State to which certification authority is delegated under this subsection) shall publish and make available to the public upon request the list of laboratories certified under this subsection.[1]

(Pub. L. 100–572, § 4, Oct. 31, 1988, 102 Stat. 2889.)

CODIFICATION

Section enacted as part of the Lead Contamination Control Act of 1988, and not as part of the Public Health Service Act which comprises this chapter.

SUBCHAPTER XIII—PREVENTIVE HEALTH MEASURES WITH RESPECT TO BREAST AND CERVICAL CANCERS

§ 300k. Establishment of program of grants to States

(a) In general

The Secretary, acting through the Director of the Centers for Disease Control and Prevention, may make grants to States on the basis of an established competitive review process for the purpose of carrying out programs—

(1) to screen women for breast and cervical cancer as a preventive health measure;

(2) to provide appropriate referrals for medical treatment of women screened pursuant to paragraph (1) and to ensure, to the extent practicable, the provision of appropriate follow-up services and support services such as case management;

(3) to develop and disseminate public information and education programs for the detection and control of breast and cervical cancer;

(4) to improve the education, training, and skills of health professionals (including allied health professionals) in the detection and control of breast and cervical cancer;

(5) to establish mechanisms through which the States can monitor the quality of screening procedures for breast and cervical cancer, including the interpretation of such procedures; and

(6) to evaluate activities conducted under paragraphs (1) through (5) through appropriate surveillance or program-monitoring activities.

(b) Grant and contract authority of States

(1) In general

A State receiving a grant under subsection (a) of this section may, subject to paragraphs (2) and (3), expend the grant to carry out the purpose described in such subsection through grants to public and nonprofit private entities and through contracts with public and private entities.

(2) Certain applications

If a nonprofit private entity and a private entity that is not a nonprofit entity both sub-

[1] So in original. Probably should be "section."

APPENDIX A.3

Treatment Rules Regulating the Existing Facility, US Environmental Protection Agency

Appendix 4.2.2

Treatment Rules Regulating the Existing Facility

EPA
United States
Environmental Protection
Agency

Ground Water Rule: A Quick Reference Guide

Overview of the Rule

Title	Ground Water Rule (GWR) 71 FR 65574, November 8, 2006, Vol. 71, No. 216 Correction 71 FR 67427, November 21, 2006, Vol. 71, No. 224
Purpose	Reduce the risk of illness caused by microbial contamination in public ground water systems (GWSs).
General Description	The GWR establishes a risk-targeted approach to identify GWSs susceptible to fecal contamination and requires corrective action to correct significant deficiencies and source water fecal contamination in all public GWSs.
Utilities Covered	The GWR applies to all public water systems (PWSs) that use ground water, including consecutive systems, except that it does not apply to PWSs that combine all of their ground water with surface water or with ground water under the direct influence of surface water prior to treatment.

Public Health Benefits

Implementation of the GWR will result in . . .	▶ Targeted protection for over 70 million people served by ground water sources that are either not disinfected or receive less than 4-log treatment. ▶ Avoidance of 42,000 viral illnesses and 1 related death annually.
Estimated impacts of the GWR include . . .	▶ The annualized present value of the GWR is $19.7 million, with a 90-percent confidence interval of $6.5 to $45.4 million. ▶ Mean annual cost per household is estimated to be less than $1.00 for approximately 96 percent of affected households.

Critical Deadlines and Requirements

For Drinking Water Systems

November 30, 2009	New ground water sources put in place after this date must meet triggered source water monitoring requirements or conduct compliance monitoring.
December 1, 2009	By this date, GWSs conducting compliance monitoring because they provide at least 4-log virus inactivation, removal, or a state-approved combination of these technologies before or at the first customer, must have notified the state and must begin compliance monitoring. The written notification to the state must include engineering, operational, and other information the state requests.
December 1, 2009	GWSs must conduct triggered source water monitoring if the GWS does not provide at least 4-log virus inactivation, removal, or a state-approved combination of these technologies before or at the first customer and the GWS is notified that a sample collected for the Total Coliform Rule (TCR) is total coliform-positive.
December 1, 2009	GWSs for which the state has identified a significant deficiency and GWSs at which at least one of the five additional ground water source samples (or at state discretion, after the initial source sample) has tested positive for fecal contamination must comply with the treatment technique requirements.

For States

August 8, 2008	States are encouraged to submit final primacy applications or extension requests to EPA.
November 8, 2008	Final primacy revision applications for GWR must be submitted to the EPA regional administrator, unless state is granted an extension.
August 8, 2010	States with approved extension agreements are encouraged to submit final primacy applications to EPA.
November 8, 2010	Final primacy applications must be submitted to the EPA regional administrator for states with a full 2 year extension.
December 31, 2012	States must complete initial sanitary survey cycle for all community GWSs except those that meet performance criteria.
December 31, 2014	States must complete initial sanitary survey cycle for all noncommunity GWSs and all community GWSs that meet performance criteria.

Analytical Methods for Source Water Monitoring

Fecal Indicator	Methodology	Method Citation*
E. coli	Colilert Colisure Membrane Filter Method with MI Agar m-ColiBlue24 Test E*Colite Test EC-MUG NA-MUG	9223 B. 9223 B. EPA Method 1604. 9221 F. 9222 G.
Enterococci	Multiple-Tube Technique Membrane Filter Technique Membrane Filter Technique Enterolert	9230 B. 9230 C. EPA Method 1600.
Coliphage	Two-Step Enrichment Presence-Absence Procedure Single Agar Layer Procedure	EPA Method 1601. EPA Method 1602.

*Footnotes regarding methods can be found in 40 CFR 141.402

Major Provisions

Compliance Monitoring

Treatment Technique Compliance Monitoring	► In order not to be subject to triggered source water monitoring, a GWS can notify the state that it provides at least 4-log treatment of viruses using virus inactivation, removal, or a state-approved combination of 4-log virus inactivation and removal before or at the first customer. The GWS must then begin compliance monitoring designed to show the effectiveness of their treatment processes. ► GWSs that use chemical disinfection and serve more than 3,300 people must continuously monitor their disinfectant concentration. GWSs must maintain the minimum disinfectant residual concentration determined by the state. ► GWSs that use chemical disinfection and serve 3,300 people or fewer must take daily grab samples or meet the continuous monitoring requirements described above for GWSs serving more than 3,300 people. ► GWSs using membrane filtration for 4-log treatment of viruses must monitor the membrane filtration process according to state-specified monitoring requirements. ► GWSs may use alternative treatment technologies (e.g., ultraviolet radiation [UV]) approved by the state. GWSs must monitor the alternative treatment according to state-specified monitoring requirements, and must operate the alternative treatment according to compliance requirements established by the state.

Source Water Monitoring

Triggered Source Water Monitoring	► GWSs that do not conduct compliance monitoring and are notified of a total coliform-positive routine sample collected in compliance with the TCR (40 CFR 141.21) must conduct triggered source water monitoring. ► GWSs must collect at least one ground water source sample from each source in use at the time the total coliform-positive sample was collected. The triggered source water sample must be analyzed for the presence of a fecal indicator as specified in the rule. ► If the triggered source water sample is fecal indicator-positive, the GWS must either take corrective action, as directed by the state, or if corrective action is not required by the state and the sample is not invalided by the state, the GWS must conduct additional source water sampling. ► States may waive the triggered source water monitoring requirement if the state determines and documents, in writing, that the total coliform-positive routine sample is the result of a documented distribution system deficiency. ► States may develop criteria for distribution system conditions that cause total coliform positive samples. A GWS can document to the state that it met the state criteria within 30 days of the total coliform-positive sample and be exempt from collecting triggered source water sample(s). ► States may invalidate a fecal indicator-positive ground water source sample under specific conditions. If a fecal indicator-positive source sample is invalidated, the GWS must collect another source water sample within 24 hours of being notified by the state of its invalidation decision.
Additional Source Water Sampling	► If the state does not require corrective action in response to a fecal indicator-positive triggered source water sample, the GWS must collect five additional source water samples (from the same source), using the same indicator as used in triggered source water monitoring, within 24 hours of being notified of the fecal indicator-positive sample.
Assessment Source Water Monitoring	► States have the opportunity to target higher risk GWSs for additional testing. States independently can determine on a case by case basis whether monitoring is necessary and when corrective action needs to be taken.

Treatment Technique Requirements

GWSs with Significant Deficiencies or Source Water Fecal Contamination	► GWSs must take corrective action if a significant deficiency is identified, or if the initial source sample (if required by the state) or one of the five additional ground water source samples tests positive for fecal contamination. The GWS must implement at least one of the following corrective actions: ► Correct all significant deficiencies. ► Provide an alternate source of water. ► Eliminate the source of contamination. ► Provide treatment that reliably achieves at least 4-log treatment of viruses (using inactivation, removal, or a state-approved combination of 4-log virus inactivation and removal) before or at the first customer for the ground water source.

New Sources

New Ground Water Sources	► New sources which come on line after November 30, 2009 are required either to conduct triggered source water monitoring as required by the GWR, or provide at least 4-log inactivation, removal or a state-approved combination of these technologies and conduct compliance monitoring within 30 days of the source being put in service.

Sanitary Surveys

All Ground Water Systems	► States are required to conduct sanitary surveys of all GWSs in order to identify significant deficiencies, including deficiencies which may make a system susceptible to microbial contamination. ► Following the initial sanitary survey, states must conduct sanitary surveys every 3 years for most CWSs and every 5 years for NCWSs and CWSs that provide at least 4-log treatment of viruses or have outstanding performance records, as determined by the state.

For additional information on the GWR

Call the Safe Drinking Water Hotline at 1-800-426-4791; visit the EPA web site at www.epa.gov/safewater/disinfection/gwr; or contact your state drinking water representative.

EPA
United States Environmental Protection Agency

Ground Water Rule Compliance Monitoring: A Quick Reference Guide

Overview of the Rule

Title	Ground Water Rule (GWR) 71 FR 65574, November 8, 2006, Vol. 71, No. 216 Correction 71 FR 67427, November 21, 2006, Vol. 71, No. 224
Purpose	Reduce the risk of illness caused by microbial contamination in public ground water systems (GWSs).
General Description	The GWR establishes a risk-targeted approach to identify GWSs susceptible to fecal contamination and requires corrective action to correct significant deficiencies and address source water fecal contamination in all public GWSs.
Utilities Covered	The GWR applies to all public water systems (PWSs) that use ground water, including consecutive systems, except that it does not apply to PWSs that combine all of their ground water with surface water or with ground water under the direct influence of surface water prior to treatment.

Purpose of Compliance Monitoring

- Compliance monitoring ensures that GWSs that provide at least 4-log treatment of viruses using chemical disinfection, membrane filtration, or a State-approved alternative treatment technology are consistently and effectively achieving this level of treatment.

When is Compliance Monitoring Required?

- GWSs that provide at least 4-log treatment of viruses **as a corrective action** must conduct compliance monitoring.
- GWSs that provide at least **4-log treatment of viruses** at or before the first customer using chemical disinfection, membrane filtration, or a State-approved alternative treatment technology and do not conduct GWR triggered source water monitoring must **notify their State in writing** that they provide treatment and begin compliance monitoring.
- The compliance dates for systems that provide 4-log treatment in lieu of GWR triggered source water monitoring are as follows:
  - GWSs with **existing ground water sources** must notify the State by **December 1, 2009**, that they provide at least 4-log treatment of viruses and begin compliance monitoring.
  - GWSs with **new ground water sources** placed into service **after November 30, 2009**, must notify the State that they provide at least 4-log treatment of viruses and begin compliance monitoring within 30 days.

What are the Compliance Monitoring Requirements for Chemical Disinfection?

GWSs Serving 3,300 or Fewer

- GWSs using chemical disinfection and serving 3,300 or fewer persons must monitor for the **residual disinfectant concentration** and meet the **State specified** minimum concentration at or before the first customer.
- GWSs must monitor on a **daily** basis and collect a grab sample during the hour of peak flow or at another time specified by the State.
  - If any daily grab sample is less than the minimum disinfectant residual concentration, the system must take follow-up samples **every four hours** until the residual meets or exceeds the State-specified minimum concentration.
  - These systems also have the option to monitor **continuously**.
    - If the GWS monitors continuously, the system must meet the monitoring requirements for GWSs serving greater than 3,300 persons (see below).
- GWSs must monitor at a State-approved location.

GWSs Serving Greater than 3,300 Persons

- GWSs using chemical disinfection and serving greater than 3,300 persons that conduct compliance monitoring must monitor for the **residual disinfectant concentration** and meet the **State specified** minimum concentration at or before the first customer.
  - GWSs of this size must monitor **continuously** and record the lowest residual disinfectant concentration each day that water from the ground water source is served to the public.
- GWSs must monitor at a State-approved location.

Failure of Continuous Monitoring Equipment

- In the event of equipment failure for continuous monitoring, provisions are available for all GWSs serving greater than 3,300 persons and GWSs serving 3,300 persons or fewer who opt to monitor continuously.
  - If there is a failure in continuous monitoring equipment, the ground water system must **conduct grab sampling every four hours** until the continuous monitoring equipment is returned to service.
  - The system must resume continuous residual disinfectant monitoring **within 14 days**.

What are the Compliance Monitoring Requirements for Membrane Filtration?

- GWSs that use membrane filtration systems to achieve 4-log virus treatment to meet GWR requirements must:
  - Operate the process in accordance with State-specified compliance requirements.
  - Monitor the membrane filtration process in accordance with all State-specified monitoring requirements.
  - Verify that the integrity of the membrane is intact.
- The **frequency** and **location** of samples for systems conducting membrane filtration will be determined by the State.

What are the Compliance Monitoring Requirements for Alternative Treatment?

- GWSs that use alternative treatment systems to achieve 4-log virus treatment to meet GWR requirements must:
  - Operate the process in accordance with State-specified compliance requirements.
  - Monitor the process in accordance with State-specified monitoring requirements.

Compliance Monitoring and Validation Testing for Ultraviolet (UV) Disinfection

- GWSs using UV disinfection as an alternative technology to meet GWR requirements should:
  - Monitor for UV intensity, as measured by a UV sensor, flow rate and UV lamp status and any additional State-specified parameters.
  - Verify the calibration of UV sensors, and recalibrate in accordance with a State-approved protocol, at least monthly.
- UV reactors should undergo validation testing to determine the operating conditions under which the reactor delivers the UV dose corresponding to the virus log removal credit received. See "Ultraviolet Disinfection Guidance for the Final Long Term 2 Enhanced Surface Water Treatment Rule" (http://www.epa.gov/ogwdw/disinfection/lt2/pdfs/guide_lt2_uvguidance.pdf) for more information.

Summary

- The following table summarizes the compliance monitoring requirements for systems providing 4-log virus treatment in lieu of triggered source water monitoring or as a corrective action under the GWR.

<table>
<tr><th>System Type</th><th>Monitor For</th><th>Frequency</th><th>Sample Location</th></tr>
<tr><td>GWSs serving ≤ 3,300 using chemical disinfection</td><td rowspan="2">Residual disinfectant concentration (must meet State minimum)</td><td>Daily or continuous</td><td rowspan="2">State-approved location(s)</td></tr>
<tr><td>GWSs serving > 3,300 using chemical disinfection</td><td>Continuous only</td></tr>
<tr><td>GWSs using membrane filtration</td><td>Membrane filtration process effectiveness</td><td colspan="2" rowspan="2">Consult State for specific information</td></tr>
<tr><td>GWSs using State-approved alternative treatment</td><td>Alternative treatment effectiveness</td></tr>
</table>

- If operation according to the criteria or requirements for compliance monitoring (minimum residual disinfectant concentration, membrane operating criteria or membrane integrity, alternative treatment operating criteria, etc.) is not restored **within four hours**, a GWS must **notify the State as soon as possible**.
- For all GWSs conducting compliance monitoring, failure to conduct required compliance monitoring (Sec. 141.403(b)) requires a **Tier 3 public notice**.
- If any GWS wishes to **discontinue** 4-log treatment of viruses before or at the first customer, the GWS then becomes subject to the **GWR triggered source water monitoring requirements**.
  - See "Ground Water Rule Factsheet: Monitoring Requirements" and "Ground Water Rule Triggered and Representative Monitoring: A Quick Reference Guide" for more information.

Consecutive System Guide for the Ground Water Rule

Office of Water (4607M) EPA 815-R-07-020 July 2007 www.epa.gov/safewater

Purpose

The purpose of this guidance manual is solely to provide technical information for water systems and states to assist them in complying with Ground Water Rule (GWR). The statutory provisions and EPA regulations described in this document contain legally binding requirements. This guidance is not a substitute for applicable legal requirements, nor is it a regulation itself. Thus, it does not impose legally-binding requirements on any party, including EPA, States, or the regulated community. While EPA has made every effort to ensure the accuracy of the discussion in this guidance, the obligations of the regulated community are determined by statutes, regulations, or other legally binding requirements. In the event of a conflict between the discussion in this document and any statute or regulation, this document would not be controlling.

Interested parties are free to raise questions and objections to the guidance and the appropriateness of using it in a particular situation.

Although this manual describes suggestions for complying with GWR requirements, the guidance presented here may not be appropriate for all situations, and alternative approaches may provide satisfactory performance.

Authorship

This manual was prepared by EPA's Office of Water. Questions concerning this document should be addressed to:

Michael Finn
U.S.EPA Office of Ground Water and Drinking Water
Standards and Risk Management Division
1200 Pennsylvania Ave, N.W. 4607M
Washington D.C. 20460-0001
finn.michael@epa.gov
202-564-5261
202-564-3767(facsimile)

Acknowledgements

American Water Works Association
Association of Metropolitan Water Agencies
Association of State Drinking Water Administrators
Eugene Leung – California Department of Public Health

CONTENTS

1. Introduction 1-1

1.1 General requirements of the GWR 1-1

2. GWR Requirements for Consecutive and Wholesale Ground Water Systems 2-1

2.1 Is triggered source water monitoring always required? 2-2
2.2 What if you believe a fecal indicator-positive source water sample is due to a lab error or other cause rather than source water contamination? 2-2
2.3 What does the GWR require for a consecutive system that has a TC-positive routine sample collected under TCR in its distribution system? 2-3
2.4 What does the GWR require for wholesale systems that are notified that its consecutive system has a TC-positive routine sample collected under TCR in the consecutive system distribution system? 2-3
2.5 What are the GWR triggered source water monitoring requirements for a consecutive system with its own ground water sources? 2-3
2.6 What are the GWR triggered source water monitoring requirements for a consecutive system with more than one connection to a wholesale system (or connections to more than one wholesale system)? 2-5
2.7 What are the GWR triggered source water monitoring requirements for a wholesale system with multiple wells? 2-6
2.8 What steps can a wholesale system take to facilitate meeting the requirements for triggered source water monitoring under the GWR? 2-7
2.9 What steps can a consecutive system take to facilitate meeting the GWR notification requirements for TC-positive samples collected under TCR? 2-8
2.10 What if a consecutive system is supplied with ground water by another consecutive system? 2-8

3. GWR Consecutive System Examples 3-1

3.1 Example 1 3-1
3.2 Example 2 3-3
3.3 Example 3 3-5

4. Example: Triggered Source Water Monitoring Plan 4-1

5. Glossary 5-1

Abbreviations

GWR	Ground Water Rule (40 CFR Part 141 Subpart S)
SDWA	Safe Drinking Water Act
TCR	Total Coliform Rule (40 CFR Part 141 Subpart C)
LCR	Lead and Copper Rule (40 CFR Part 141 Subpart I)
TC	Total Coliform

For more information, contact EPA's Safe Drinking Water Hotline, 1 (800) 426-4791, or see the Office of Ground Water and Drinking Water web page at http://www.epa.gov/safewater.

This guidance manual is available electronically at http://www.epa.gov/safewater/disinfection/gwr/compliancehelp.html. To order a paper copy of guidance manuals, you may contact the US EPA Water Resource Center at 202-566 -1729 or by mail at:

US Environmental Protection Agency
Water Resource Center (RC-4100)
1200 Pennsylvania Ave NW
Washington DC 20460
E-mail: center.water-resource@epa.gov

Other Guidance Manuals

EPA has developed other guidance manuals to aid EPA, State agencies, and you in implementing the GWR and other rules and to help to ensure consistent implementation.

Consider the Source: A Pocket Guide to Protecting Your Source: Drinking Water Pocket Guide #3 - An electronic version is available at http://www.epa.gov/safewater/sourcewater.

Public Notification Handbook (EPA 816- R- 00-010) - An electronic version is available at http://www.epa.gov/safewater/publicnotification/compliancehelp.html.

Preparing Your Drinking Water Consumer Confidence Report (CCR), Revised Guidance for Water Suppliers EPA 816-R-002, April 2005. This document provides information to assist drinking water systems with preparing and distributing CCRs. An electronic version is available at http://www.epa.gov/safewater/ccr/compliancehelp.html.

Consumer Confidence Report Rule: A Quick Reference Guide (EPA 816-F-02-026), November 2002 - A condensed guide that provides a brief overview of the Consumer Confidence Report Rule. An electronic version is available at http://www.epa.gov/safewater/ccr/compliancehelp.html.

Surface Water Treatment Rule Guidance Manual - The Appendices also include CT tables for the inactivation of Giardia and viruses for chlorine, chlorine dioxide and ozone.

EPA is also developing a series of guidance documents to help public water systems implement requirements associated with the GWR. Electronic versions of the guidance documents are, or will be, available on the GWR Compliance Help page at http://www.epa.gov/safewater/disinfection/gwr/compliancehelp.html.

Complying with the Ground Water Rule: Small Entity Compliance Guide (EPA 815-R-07-018) - This guide is designed for owners and operators of public water systems serving 10,000 or fewer persons that are required to comply with the Ground Water Rule.

Ground Water Rule Corrective Action Guidance Manual - This manual provides information for ground water systems that must provide corrective action as a result of significant deficiencies or fecally-contaminated source water. The guidance includes technical information on selecting appropriate disinfection technologies to enable primacy agencies and PWSs to select the treatment most appropriate for a given system. It also provides technical information to States and systems on eliminating sources of contamination, utilizing alternate sources, and correcting significant deficiencies for situations in which disinfection is not the selected corrective action.

Sanitary Survey Guidance Manual for Ground Water Systems - This guidance provides information to assist States and other primacy programs in conducting sanitary surveys of ground water systems.

Ground Water Rule Source Water Monitoring Methods Guidance Manual (EPA 815-R-01-019) - This manual provides guidance on triggered and optional assessment source water monitoring issues such as: selection of fecal indicators, sample collection and shipping, source water monitoring methods, laboratory quality assurance (QA) and quality control (QC), and evaluation of fecal indicator data. This manual also provides an overview of GWR requirements and includes frequently asked questions regarding source water monitoring.

Ground Water Rule Source Assessment Guidance - This manual provides information on procedures for identifying ground water sources at risk for contamination. Risk factors are discussed with emphasis on identifying readily available factors suitable for office, rather than field determination of risk at an individual PWS well. The guidance also lists sources of information for making determinations and includes field methods for determining the presence of a hydrogeologic barrier.

1. Introduction

This guide describes the regulatory requirements of the Ground Water Rule (GWR) as it applies to wholesale systems that supply ground water and to the consecutive water systems that receive and distribute that ground water supply.

> The GWR applies to all public water systems that use **ground water unless** the system combines all of its ground water with surface water **prior** to treatment under 40 CFR 141 Subpart H (Filtration and Disinfection).
>
> A **wholesale system** is a public water system that supplies finished water to one or more other public water systems.
>
> A **consecutive system** is a public water system that buys or otherwise receives some or all of its finished water from a wholesale system.

This document is intended to provide guidance to wholesale and consecutive ground water systems and States in employing source water monitoring to identify fecal contamination of ground water sources, one of the risk-based components of the GWR

Consecutive systems, and wholesale/consecutive system interactions and contractual relationships, can be complex. There are a variety of State approaches to addressing regulatory requirements for consecutive systems since most previous regulations under the SDWA did not specifically address consecutive systems.

In the development of the GWR, the Stage 2 Disinfectants and Disinfection Byproducts Rule and the Long Term 2 Enhanced Surface Water Treatment Rule under the SDWA, EPA has explicitly addressed the applicability of these regulations to consecutive systems. EPA is providing guidance to assist public water systems and States in implementing these regulations addressing consecutive systems.

1.1 General requirements of the GWR

The requirements of the GWR (40 CFR Subpart S) constitute national primary drinking water regulations. The GWR was published in the Federal Register on November 8, 2006 (71 Federal Register 65574). A copy of the rule language can be found on EPA's website at http://www.epa.gov/safewater/disinfection/gwr/regulation.html.

The following are general GWR requirements applicable to wholesale and consecutive ground water systems:

(a) Provide requested existing information to the State to aid the State in performing a sanitary survey of your system.

(b) Correct any significant deficiencies identified by the State in your system within a required timeframe.

(c) A consecutive system is required to report TC-positive routine sample collected under TCR to the wholesale supplier(s) within 24 hours of being notified of the TC-positive sample, unless the consecutive system or wholesale system(s) provide(s) 4-log (99.99 percent) treatment of viruses (by inactivation, removal or a combination of inactivation or removal) for the wholesale ground water source(s).

(d) Wholesale systems and consecutive systems with their own ground water sources must perform triggered microbial monitoring of ground water source(s) after a TC-positive routine sample collected under TCR if they do not provide 4-log (99.99 percent) treatment of viruses (by inactivation, removal or a combination of inactivation or removal) for the source.

(e) A wholesale system is required to notify the consecutive system(s) of a fecal indicator-positive ground water source sample within 24 hours of being notified of the fecal indicator-positive sample.

(f) Correct fecal contamination of your ground water source(s) within a required timeframe.

(g) If required by your State, provide existing information to the State to aid the State in performing a hydrogeologic sensitivity assessment for your source(s).

(h) Wholesale systems and consecutive systems with their own ground water sources must perform assessment microbial monitoring of ground water source(s) if required by the State.

(i) If required by the State, monitor any treatment process used to provide 4-log (99.99 percent) treatment of viruses (by inactivation, removal or a combination of inactivation or removal) of viruses for your source(s), and

(j) Keep records and report to the State for certain requirements listed in (a)-(i) above.

The requirements specific to wholesale and consecutive systems are discussed in greater detail in the next section.

2. GWR Requirements for Consecutive and Wholesale Ground Water Systems

Exhibit 2.1 describes some of the specific responsibilities of consecutive and wholesale ground water systems under the GWR.

Exhibit 2.1 GWR Requirements for Wholesale and Consecutive Systems (Yes=Required, No=Not Required)

Ground Water Rule Requirement	Wholesale System	Consecutive System -100% of supply purchased	Consecutive system - purchased and own supply
Provide the State with information it requests to complete the sanitary survey.	Yes	Yes	Yes
Correct any significant deficiencies identified by the State within a required timeframe.	Yes	Yes	Yes
Notify your wholesale supplier within 24 hours of being notified by your laboratory of a TC-positive routine sample collected under TCR in your distribution system if you or your wholesale supplier do not provide 4-log treatment of viruses for your ground water supply.	No	Yes	Yes
Triggered[1] source water monitoring of your own sources[2] if you do not provide 4-log treatment of viruses for those sources	Yes	No	Yes
Triggered[1] source water monitoring of your source(s)[2] if you are notified of TC-positive routine sample collected under TCR by a consecutive system you serve and if you or the consecutive system do not provide a 4-log treatment of viruses for your sources.	Yes	No	No
Notify consecutive systems you serve within 24 hours if a ground water source sample is fecal indicator-positive.	Yes	No	No
Corrective action and/or treatment of your ground water sources, if required, after a fecal indicator-positive source water sample.	Yes	No	Yes
If directed by the State, provide the State with information it requests to complete the hydrogeologic sensitivity assessment for your water system.	Yes	No	Yes
If directed by the State, conduct assessment source water monitoring of your ground water sources.	Yes	No	Yes
Monitor treatment processes in accordance with GWR and State requirements.	Yes	Yes	Yes
Reporting, record keeping and public notification requirements of the GWR.	Yes	Yes	Yes

1 Triggered source monitoring consists of collecting a sample from your ground water sources(s) after a TC-positive routine sample collected under TCR and analyzing the sample for a fecal indicator approved by the State.
2 All sources do not have to be monitored under triggered monitoring if a "triggered source water monitoring plan" has been developed and approved by the State.

2.1 Is triggered source water monitoring always required?

A wholesale system or a consecutive system with its own ground water source(s) that has evidence that the TC-positive routine sample collected under TCR is due to a distribution system deficiency in the wholesale or consecutive system distribution system, rather than source water contamination, may apply to the State for an exception to the triggered source water monitoring requirements on a case-by-case basis.

> If the wholesale system or consecutive system **provides 4-log treatment** of viruses for a ground water source and conducts compliance monitoring, triggered source water monitoring for that source **is not required**.

- The State is then required to make a determination that the total coliform-positive sample is caused by a distribution system deficiency in the wholesale or consecutive distribution system.

- If the State decides to grant an exception to the triggered source water monitoring requirements, then the State must document the decision in writing.

- You should have information that demonstrates the distribution problem that caused the positive sample available for the State when you make your request for an exception.

The State may also establish criteria for distribution system conditions that will cause total coliform-positive samples. If the total coliform-positive sample was collected in the wholesale or consecutive distribution system under conditions that meet those State-specified criteria, you are not required to conduct triggered source water monitoring. You must notify the State within 30 days of the total coliform-positive sample that met State criteria for an exception to the triggered monitoring requirements of the GWR. You should become familiar with your State's criteria for exceptions to triggered monitoring.

2.2 What if you believe a fecal indicator-positive source water sample is due to a lab error or other cause rather than source water contamination?

The State may invalidate a fecal indicator-positive source sample if the laboratory establishes that improper sample analysis occurred or if the State has substantial grounds to believe that a sample result is due to circumstances that do not reflect source water quality.

- If the State invalidates a fecal indicator-positive sample, then the GWR requires that the State document the decision in writing.

- You should have information from the laboratory about the analysis or information that demonstrates the fecal indicator-positive does not reflect source water quality available for the State to review when you make your request to invalidate.

- If the State invalidates a fecal indicator-positive source water sample, the GWR requires that the system must collect another source water sample and have it analyzed for the same fecal indicator within 24 hours of being notified of the invalidation.

2.3 What does the GWR require for a consecutive system that has a TC-positive routine sample collected under TCR in its distribution system?

The GWR requires that a consecutive system that serves ground water from a wholesale system that has not received 4-log treatment for viruses do the following after it is notified of a TC-positive routine sample collected under TCR in the consecutive system's distribution system:

- Notify the wholesale system(s) of the TC-positive routine sample collected under TCR within 24 hours.

- Conduct public notification if a source water sample from a source that serves the consecutive system is fecal indicator-positive.

2.4 What does the GWR require for wholesale systems that are notified that its consecutive system has a TC-positive routine sample collected under TCR in the consecutive system distribution system?

The GWR requires that a wholesale system that supplies ground water that has not received 4-log treatment for viruses do the following when it is notified that its consecutive system has a TC-positive routine sample collected under TCR in the consecutive system's distribution system:

- Collect a sample from the wholesale system's ground water source(s) and analyze the sample for a fecal indicator;

- If a source water sample is fecal indicator-positive, notify all consecutive systems served by the source (and conduct public notification if the source also serves the wholesale system's consumers);

- Complete corrective action if required by the State after the initial fecal indicator-positive sample; and

- Complete corrective action if any of the five additional samples collected after the initial fecal-indicator positive is also fecal indicator-positive.

2.5 What are the GWR triggered source water monitoring requirements for a consecutive system with its own ground water sources?

One of the main elements of the GWR is to identify contaminated ground water sources through sampling and correct them as needed. If a consecutive system that has its own source(s) of ground water has a TC-positive routine sample collected under TCR in its distribution system and does not know which source is the cause, it must sample its source(s) and must notify its wholesale supplier as required by the GWR.

However, if the consecutive system can identify portions of its system that are served by only one source, monitoring of all the sources may not be necessary. Consecutive systems with their own sources should review their distribution system and available water quality data to determine if certain parts of its system are served by a particular source. Information that could help identify areas served by a particular source includes:

- Distribution system maps with pressure zones, isolation valves, storage tanks, sources, flow meters, and any other significant facilities identified,
- Normally closed valves between service areas or pressure zones,
- Water quality information that identifies a particular source (alkalinity, pH, disinfectant residual, fluoride, Lead and Copper Rule parameters etc.), and/or
- Distribution system models (proprietary software , EPANET). These tools need to be properly calibrated and verified for valid results to be obtained in a specific distribution system.

If sufficient information is available, it may be possible to associate a routine TCR monitoring site with a particular source. In the event of a TC-positive routine sample collected under TCR at such a site, the system and the State can be confident that the correct source is being sampled.

A triggered source water monitoring plan can help ensure the correct source is sampled without collecting unnecessary samples. Under the GWR, States may require a triggered source water monitoring plan to be submitted for systems with more than one ground water source. Even if your State does not require you to submit a triggered source water monitoring plan, you may wish to develop one anyway and discuss it with your State. You may also want to develop a monitoring plan if you rotate the wells you use on a regular basis or if you only use a well during certain times of the year. For example, a triggered source water monitoring plan for a system with seasonal sources could include both a summer and winter monitoring plan. The GWR requires that a triggered source water sample be collected within 24 hours of being notified of a TC-positive routine sample collected under TCR. A triggered source water monitoring plan can help you make a decision about where to collect a sample more rapidly.

If directed by the State, systems must submit for State approval **a triggered source water monitoring plan** that identifies one or more ground water sources that are representative of each monitoring site in the system's sample siting plan under 141.21(a) (commonly known as the Total Coliform Rule) and that the system intends to use to meet the triggered monitoring requirements of the Ground Water Rule (§141.402).

2.6 What are the GWR triggered source water monitoring requirements for a consecutive system with more than one connection to a wholesale system (or connections to more than one wholesale system)?

A consecutive system with multiple connections to a wholesale system or with connections to more than one wholesale system may not know which connection is responsible for a TC-positive routine sample collected under TCR in its distribution system. If the system does not know which connection could be the cause and has more than one wholesale supplier, it must notify all its wholesale suppliers as required by the GWR. However, if the consecutive system can identify portions of its system that are served by a particular connection, monitoring of all the wholesale sources may not be necessary.

Wholesale systems that serve through multiple connections should review their distribution system and available water quality data to determine if certain consecutive systems or certain connections are served by a particular source. As in the previous discussion, water quality data, pressure zone and valve maps, and modeling can be useful in determining if a particular consecutive system connection is served by particular source. This would also apply to wholesale systems that serve consecutive systems served by more than one wholesale system. If there is sufficient information to demonstrate that a particular sample location in a consecutive system is served by a particular wholesale supply, then the required triggered source water monitoring may not have to be completed for all sources.

For wholesale systems with multiple consecutive systems and consecutive systems with multiple wholesale suppliers, the decision about where to collect a source water sample may not be straightforward. As discussed previously, a triggered source water monitoring plan can help ensure the correct source is sampled without collecting unnecessary samples. States may require a triggered source water monitoring plan to be submitted for consecutive systems. Even if your State does not require you to submit a triggered source water monitoring plan, you may wish to develop one and have it reviewed by your State.

- A triggered source water monitoring plan is particularly useful for wholesale systems with multiple consecutive systems and multiple sources and for consecutive systems with their own sources, multiple wholesale suppliers, or multiple connections to a wholesale supplier.

- Wholesale and consecutive systems may also want to develop a triggered source water monitoring plan if they rotate the wells used on a regular basis or only use a well during certain times of the year.

The GWR **requires** that each source in use be sampled **within 24 hours of being notified of a TC-positive routine sample collected under TCR.** However, a State-approved triggered source water monitoring plan can reduce the number of sources that need to be sampled by identifying the specific source(s) serving the site of the TC-positive routine sample collected under TCR.

With a triggered source water monitoring plan approved by the State, the system and the State can have confidence that the correct source is being sampled after a TC-positive routine sample collected under TCR without collecting a sample from every source in the system. Part 4 of this guidance document describes the recommended minimum elements of a triggered source water monitoring plan

2.7 What are the GWR triggered source water monitoring requirements for a wholesale system with multiple wells?

Most wholesale ground water systems will have more than one well. The wells may not draw from the same aquifer or certain wells may not serve certain parts of the system or customers. Once the wholesale system is notified of a TC-positive routine sample collected under TCR by one of its consecutive systems it must decide (within 24 hours) where to collect the required source water samples and then collect the sample.

- If you are a wholesale system with more than one ground water source and you cannot identify which wells serve the consecutive system, or identify a well or wells representative of the ground water you supplied, you must sample all your sources.

- A representative well (or wells) should represent all your ground water sources that have the potential to serve the area that had the total-coliform positive sample. Use of a representative well (or wells) requires State approval.

- If a well (or wells) only serves some of the consecutive system(s) or portions of the wholesale distribution system and you provide this information to the State in a triggered source water monitoring plan, you may be able to sample only the source(s) that serves the system, or portions of the system, with a TC-positive routine sample collected under TCR.

A triggered source water monitoring plan can help ensure that the source(s) that serve(s) the TCR sample site is sampled without collecting samples from every source. States may require a triggered source water monitoring plan to be submitted for systems with more than one ground water source. The triggered source water monitoring plan can identify representative sources, or areas served by different sources for likely distribution system scenarios, as well as sources used only seasonally or on a rotating schedule so that the appropriate sources are sampled. Even if your State does not require you to submit a triggered source water monitoring plan, you may wish to develop one anyway and discuss it with your State. Part 4 of this guidance document describes the recommended minimum elements of a triggered source water monitoring plan.

2.8 What steps can a wholesale system take to facilitate meeting the requirements for triggered source water monitoring under the GWR?

Under the GWR, a wholesale system is responsible for collecting a source water sample from each source in use after being notified of a TC-positive routine sample collected under TCR in its own or any of its consecutive systems' distribution system(s) unless it is has a State-approved triggered source water monitoring plan that permits more focused source monitoring. Information about and communication with the consecutive systems is needed to meet the GWR requirements

Steps a wholesale system can take to facilitate notification of TC-positive routine samples collected under TCR in the consecutive systems it serves include:

- Identify all consecutive systems subject to TCR and to GWR triggered source water monitoring under the GWR.
- Identify all connection(s) to those consecutive systems. Include information about the source and status (active, standby, abandoned etc.) of each connection. Identify who has the ability to alter the status of the connection and the date the status was last confirmed, if applicable.
- Identify those consecutive systems with their own ground water sources and those supplied by another wholesale water system.
- Identify a contact (and alternates and after hours contacts) for each consecutive system, keep a record of contact phone numbers, and develop a procedure to keep the contact list up to date and accurate.
- Provide training and/or outreach materials on the requirements for notification by consecutive systems to their wholesale suppliers and the need for timely notification to the wholesaler of TC-positive routine samples collected under TCR in the consecutive system(s) distribution system(s).
- Identify any consecutive systems that are non-community water systems. These systems may not have full time staff and may have special needs for communication and training and outreach. Timely notification of the wholesale system is an important element of the triggered monitoring requirements of the GWR. The wholesale system may need to make special efforts and arrangements for non-community consecutive systems.
- Identify the local laboratories used by the consecutive systems and contacts in those laboratories. With cooperation of the consecutive systems and the laboratory, develop a response plan for notification of any TC-positive routine samples collected under TCR from either the wholesale system or the consecutive system.
- Identify staff contacts within the wholesale systems for consecutive system communication and liaison functions.
- Develop a documentation process for all communications.

2.9 What steps can a consecutive system take to facilitate meeting the GWR notification requirements for TC-positive samples collected under TCR?

It is important to establish a communication process for the consecutive systems to notify the wholesale system of TC-positive routine samples collected under TCR and be aware of water quality and operational issues in the wholesale systems. Communication processes could include:

- Written communication and notification procedures. Non-community water systems without full-time staff may need to make special arrangements to ensure timely notification from the laboratory and timely notification of and communication with the wholesale system.
- Dedicated phone lines with after hours forwarding or recorded message capacity.
- Web-based information pages and message posting.
- Pager, cell phone, and wireless message transmission.
- E-mail notification.
- Laboratory notification of both the consecutive and wholesale system for a TC-positive routine sample collected under TCR.

2.10 What if a consecutive system is supplied with ground water by another consecutive system?

The GWR requires that a wholesale system collect and analyze at least one source water sample if the wholesale system (or the consecutive system) does not provide 4-log virus treatment of the ground water supplied to the consecutive system and a TC-positive routine sample collected under TCR occurs in the consecutive system.

In some systems, the wholesale supply may pass through one or more consecutive systems before reaching its final consecutive connection. In these cases, a triggered source water monitoring plan and reliable communications and notification processes are important to ensure that both the consecutive system and the wholesale system meet their responsibilities under the GWR. Triggered source water monitoring plans can be prepared for the combined wholesale/consecutive distribution system or on a system-by-system basis.

Source water monitoring plans for wholesale systems should identify the consecutive systems served and, if applicable, the sources serving each consecutive system. Source water monitoring plans for consecutive systems should identify the wholesale supply or suppliers for the points of entry. Source water monitoring plans for combined wholesale/consecutive should include all the information describe previously for individual wholesale or consecutive systems. Sections 2.8 and 2.9 describe important elements of communication and notification between wholesale and consecutive systems. Part 4 of this guidance document describes the recommended minimum elements of a triggered source water monitoring plan.

3. GWR Consecutive System Examples

3.1 Example 1

Figure 3.1 – First Valley Water District System

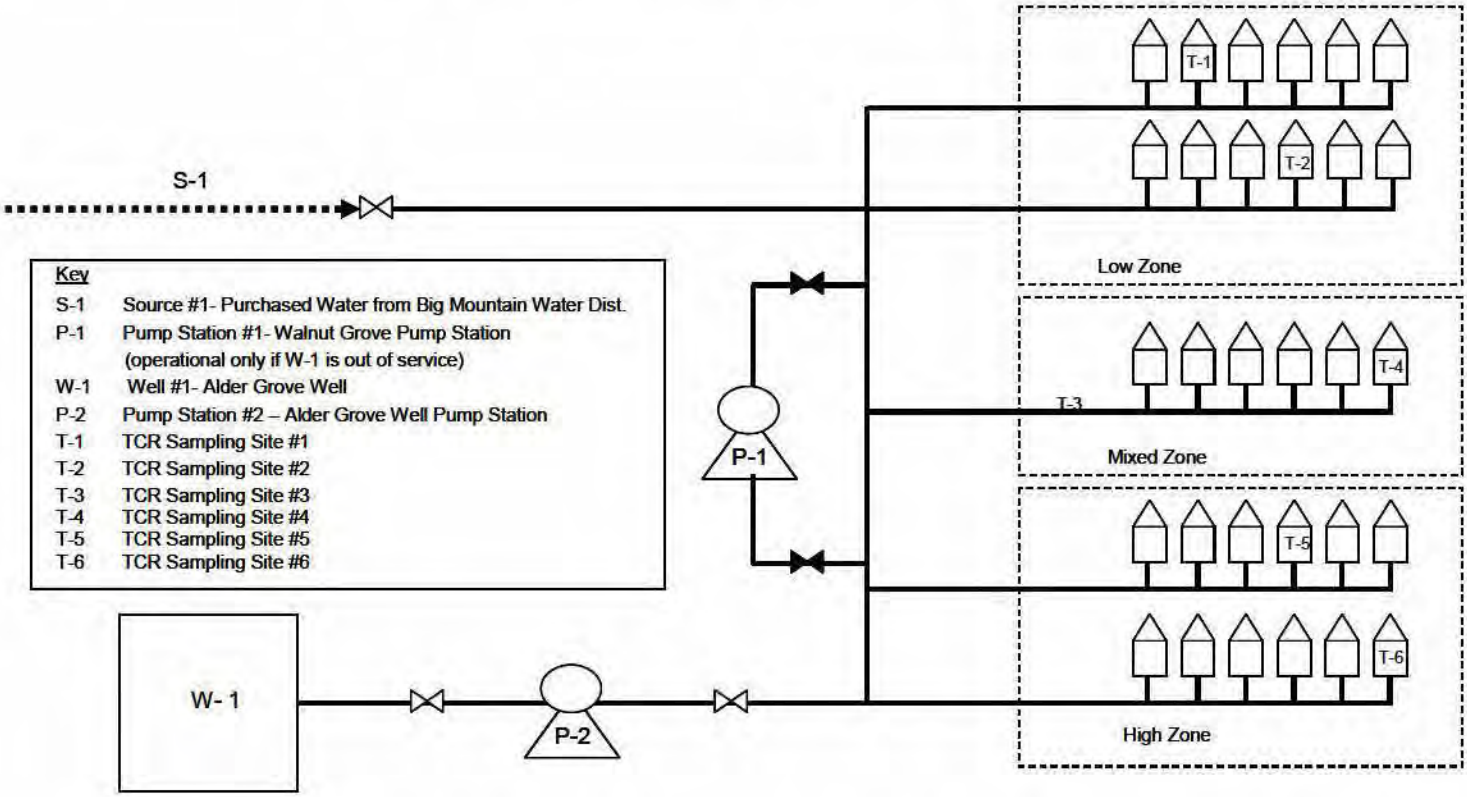

- The First Valley Water District purchases ground water from the Big Mountain Water District in addition to having one well.
- The First Valley supply is delivered through valved connections from Big Mountain's Cross County Pipeline.
- First Valley Water District also has its own well that is used routinely.
- Pressure in the Big Mountain supply is only adequate to serve the low zone of the system.
- Some mixing of the Big Mountain supply and First Valley's own supply occurs between the low and the high zone (Mixed Zone).
- The Big Mountain supply can only reach the high zone when the Walnut Grove Pump Station is operated to move water between zones and this occurs only when the Alder Grove Well is

out of service or in an emergency (fire, major leak).

Based on the hydraulics of the First Valley system:

- A TC-positive routine sample collected under TCR in the low zone (TCR sites 1 and 2) triggers source water sampling in the Big Mountain Water District's sources.

- A TC-positive routine sample collected under TCR in the high zone (TCR sites 5 and 6) triggers a source water sample from the Alder Grove Well. This is true as long as the Walnut Grove Pump Station was not operating at the time of the TC-positive routine sample collected under TCR.

- The mixed zone contains water from both sources. Since a single source cannot be identified for this zone, triggered source water samples must be collected from both the Big Mountain source(s) and the Alder Grove Well after a TC-positive routine sample collected under TCR in the mixed zone (TCR sites 3 and 4).

In this example, system hydraulics and operation allow for some of the routine TCR monitoring sites to be identified as supplied by only one of the First Valley District's sources. The GWR requires that source water samples be collected no more than 24 hours after being notified of a TC-positive routine sample collected under TCR, or for a wholesale system, no more than 24 hours after being notified by their consecutive system of TC-positive routine sample collected under TCR in the consecutive system's distribution system. To meet these requirements, it important that samples be properly identified and that system personnel are aware of the correct response to a TC-positive routine sample collected under TCR at a particular sample location. Also, the State would have to approve representative sampling or a triggered source water monitoring plan.

3.2 Example 2

Figure 3.2 – Second Valley Water District System

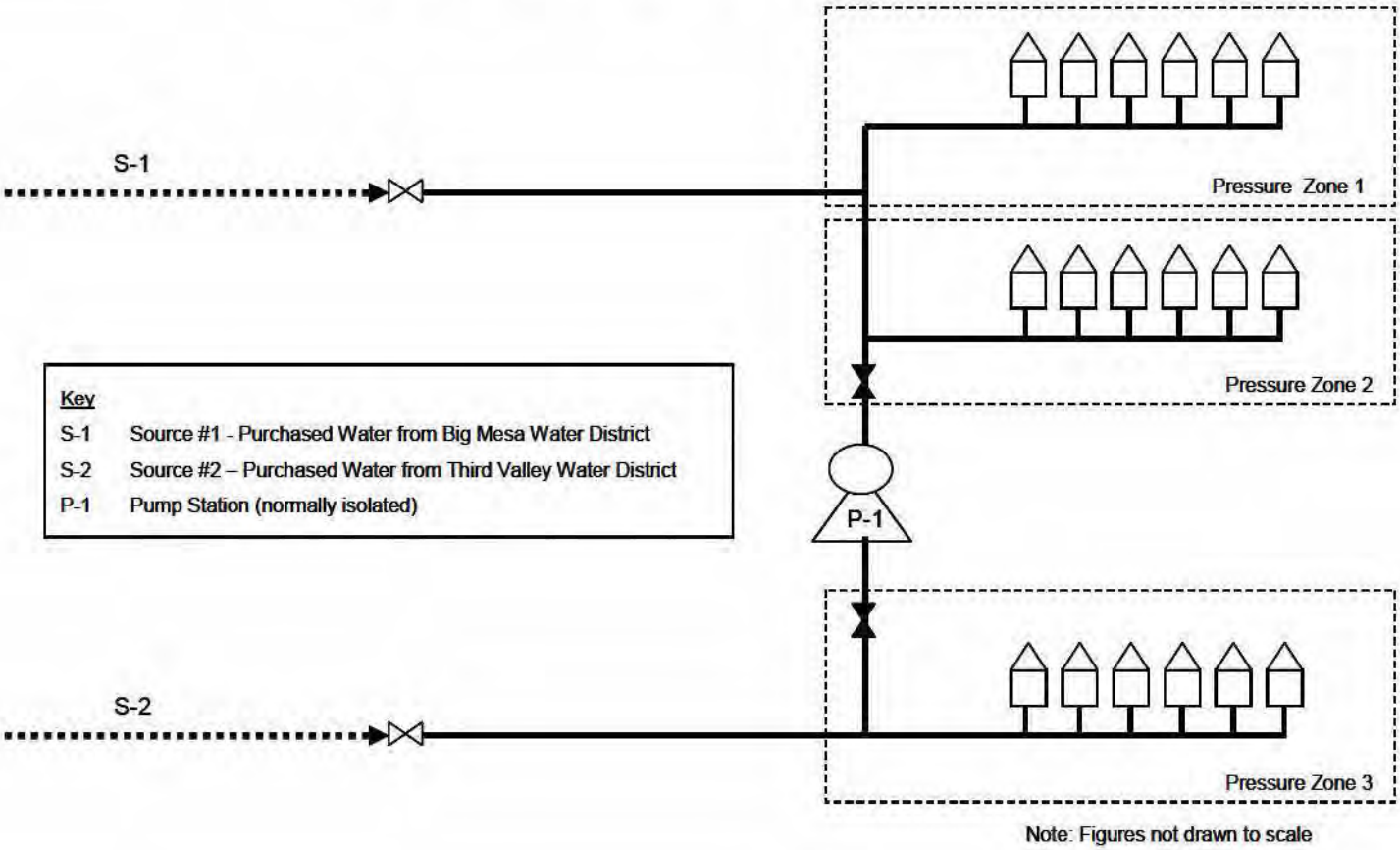

The Second Valley Water District purchases its entire supply from the Big Mesa Water District and the Third Valley Water District.

- Second Valley has three pressure zones in its system.
- Two zones are served by connection to Big Mesa; the third zone is served by a connection to a Third Valley Water District pipeline.
- The Big Mesa Water District adds chlorine to its ground water supply but does not provide a 4-log inactivation of viruses.
- The Third Valley Water District adds chloramine to its supply.
- The Third Valley supply is a mix of surface water and ground water depending on the time of year and Third Valley provides a 4-log virus inactivation for its ground water supply.

- The three zones are interconnected but the Second Valley operators keeps the connections between the zones at valves and pump stations closed to prevent mixing and the taste and odor complaints that often happen when the two supplies mix.

In this example, there are multiple wholesale sources, however the two sources do not mix under normal conditions. If a TC-positive routine sample collected under TCR occurred in the Second Valley system:

- A source water sample from the Big Mesa sources would be required for a TC-positive routine sample collected under TCR in the two zones served by the Big Mesa supply.
- No source water sample would be required for TC-positive routine sample collected under TCR that occurred in the zone served by the Third Valley supply since Third Valley provides a 4-log virus inactivation for its sources.

3.3 Example 3

Figure 3.3 – Fourth Valley Water District System

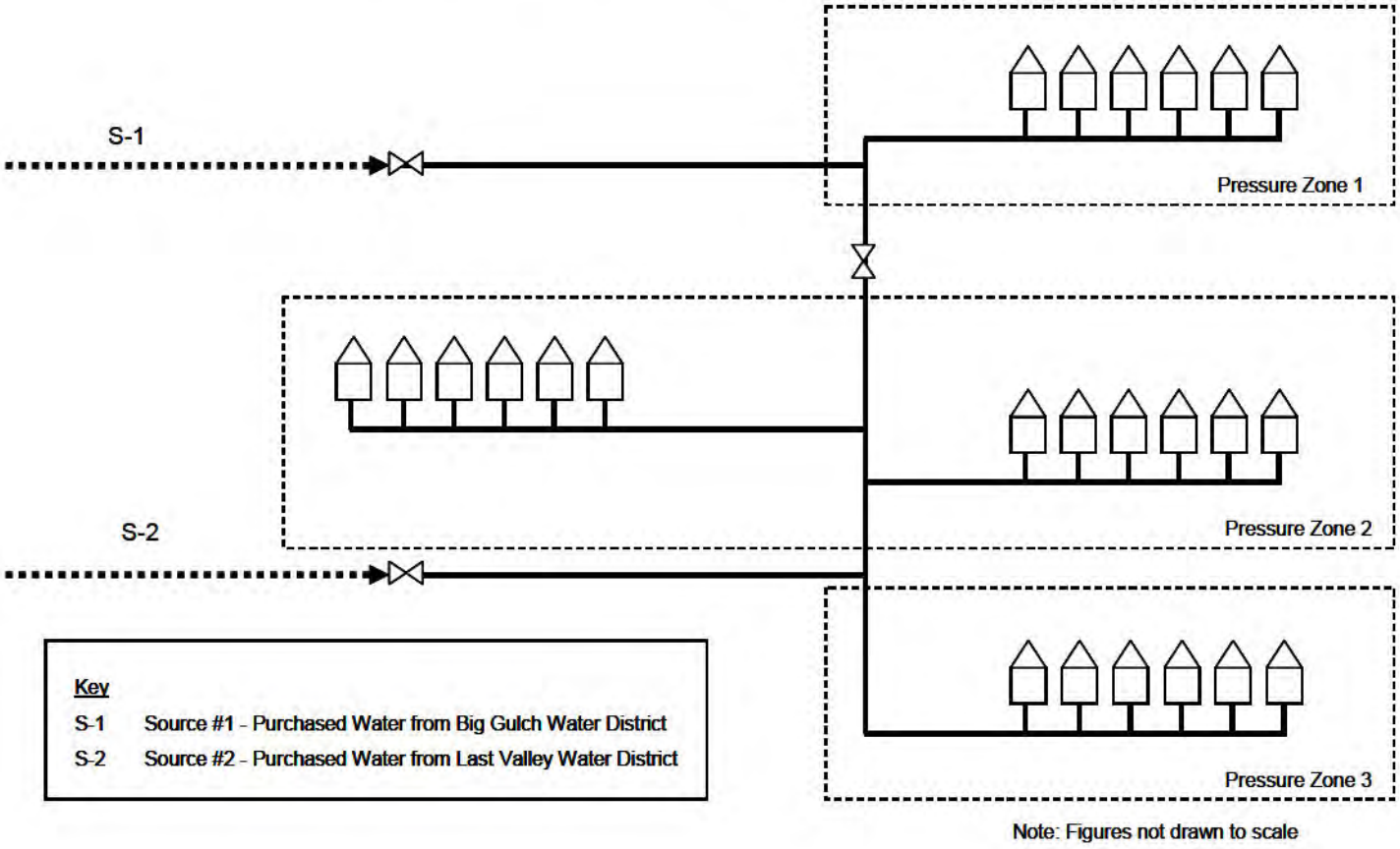

The Fourth Valley Water District purchases its entire supply from the Big Gulch Water District and the Last Valley Water District. Fourth Valley has three pressure zones in its system. One zone is served by the connection to Big Gulch the other two zones are served by connections to the Last Valley Water District transmission pipeline.

- The Big Gulch Water District adds chlorine to its wholesale ground water supply but does not provide a 4-log inactivation of viruses.
- The Last Valley Water District supply is a mix of surface water and ground water.
- The Last Valley Water District also adds chlorine to its supply but does not provide a 4-log inactivation of viruses for its ground water sources.

- The Last Valley Water District surface water supply has a low alkalinity and the Last Valley District adjusts the pH to protect its pipelines and meet the water quality parameters set by the State under the Lead and Copper Rule.

- As Fourth Valley has conducted its Lead and Copper Rule water quality parameters tap sampling it has identified the parts of its service area that receive the Last Valley supply. That information has been put on a distribution system map along with the locations of the routine TCR monitoring sites.

This example is more complicated than the first two because Fourth Valley has two wholesale supplies with both surface and ground water sources and multiple pressure zones. For large wholesale systems with multiple customers and multiple sources, deciding where to collect the required source water samples could be even more complicated.

In this example, Fourth Valley has information it collected for the Lead and Copper Rule that could allow it to identify the wholesale supply at any of its routine TCR monitoring sites and reduce the number of source water samples that must be collected. The water quality information combined with a triggered source water monitoring plan would allow the Fourth Valley system to quickly identify the source and notify the correct wholesale supplier.

4. Example: Triggered Source Water Monitoring Plan

A triggered source water monitoring plan can help ensure that the source(s) that serve the TCR sample site is sampled without collecting samples from every source. States may require a triggered source water monitoring plan to be submitted for systems with more than one ground water source. The triggered source water monitoring plan can identify representative sources, or areas served by different sources for likely distribution system scenarios, as well as sources used only seasonally or on a rotating schedule so that the appropriate sources are sampled. For example, a triggered source water monitoring plan for a system with seasonal sources could include both a summer and a winter monitoring plan. Even if your State does not require you to submit a triggered source water monitoring plan, you may wish to develop one anyway and discuss it with your State.

A triggered source water monitoring plan is particularly useful for wholesale systems with multiple consecutive systems and multiple sources and for consecutive systems with their own sources, multiple wholesale suppliers, or multiple connections to a wholesale supplier. A triggered source water monitoring plan should include the following minimum elements:

1) Map or schematic of the system with sources and/or points of entry and TCR compliance monitoring locations identified. **Your distribution system map or schematic should not contain information that poses a security risk to your system.** EPA recommends that you submit either a distribution system schematic with no landmarks or addresses or a City map without locations of pipes indicated.

2) Identify the source type for each source/point of entry (e.g., seasonal, emergency, ground water, surface water etc.).

3) Identify the source(s) serving each TCR compliance monitoring location and the basis for the determination (e.g., system hydraulics, operation, water quality data, etc.).

4) For wholesale systems, the consecutive systems served and, if applicable, the sources serving each consecutive system.

5) For consecutive systems, the wholesale supply or suppliers for the points of entry.

6) Identify any representative ground water source(s) that will be used to satisfy the triggered monitoring requirements of the GWR and the basis for the selection (e.g. geologic/hydrogeologic information, well construction data, water quality data, sanitary surveys, Source Water Assessments, etc.).

7) Any changes or variations expected in the monitoring plan (e.g., use of seasonal sources, rotating sources, etc.).

Exhibit 4-1 is an example triggered source water monitoring plan. The plan is for the First Valley Water system described in Section 3.1 and illustrated in Figure 3.1.

Exhibit 4.1 Triggered Source Water Monitoring Plan – First Valley Water System
(See Section 3.1 and Figure 3-1)

Routine TCR site	Served by	Source sample at/by	Comments/Instructions
#1 Turnout Valve lot	Big Mountain	Big Mountain WD	Contact Big Mountain WD Water Quality Section
#2 Redwood Park	Big Mountain	Big Mountain WD	Day phone: Fax: After hours:
#3 Old Town	Both	Big Mountain WD First Valley WD (Alder Grove Well sample tap)	Contact Big Mountain WD Water Quality Section. Contact lab for sample pick up. Day phone: Fax: After hours :
# 4 Walnut Grove PS	Both	Big Mountain WD First Valley WD (Alder Grove Well sample tap)	Sample bottles at corp yard -label as SOURCE and follow chain of custody
# 5 Freshwater School	Alder Grove Well	First Valley WD (Alder Grove Well sample tap)	Contact lab for sample pick up.
# 6 Corporation Yard	Alder Grove Well	First Valley (Alder Grove Well sample tap)	Sample bottles at corp yard -label as SOURCE and follow chain of custody

5. Glossary

Consecutive system - A public water system that buys or otherwise receives some or all of its finished water from a wholesale system.

Fecal Indicator – Microorganisms (i.e., bacteria and viruses) that are closely associated with fecal contamination and indicate that a source of water may be fecally-contaminated. For the GWR, fecal indicators are *E.Coli*, enterococci, or coliphage, as specified by the State.

Sanitary survey – A "sanitary survey", as conducted by the State, includes, but is not limited to, an onsite review of the water source (identifying sources of contamination by using results of source water assessments or other relevant information, where available), facilities, equipment, operation, maintenance, and monitoring compliance of a public water system to evaluate the adequacy of the system, its sources and operations and the distribution of safe drinking water.

Significant deficiency – A "significant deficiency" includes, but is not limited to, a defect in design, operation, or maintenance, or a failure or malfunction of the sources, treatment, storage, or distribution system that the State determines to be causing, or has the potential for causing, the introduction of contamination into the water delivered to consumers.

State – Refers to the agency of the State or Tribal government which has jurisdiction over public water systems. During any period when a State or Tribal government does not have primary enforcement responsibility pursuant to Section 1413 of the Safe Drinking Water Act, the term 'State' means the Regional Administrator of the U.S. Environmental Protection Agency.

Source sample – A sample collected at the source of water for the public water system before treatment or, if no treatment is provided, before the distribution system (i.e., at the wellhead)

Subpart H system – A public water system serving surface water or ground water under the influence of surface water. These systems are subject to the filtration and disinfection requirements of 40 CFR Subpart H.

Total Coliforms – A group of closely related bacteria that are generally harmless. They are natural and common inhabitants of the soil and ambient waters (such as lakes and rivers).

Treatment technique violation – Violation of a treatment technique established in lieu of a Maximum Contaminant Level. For the GWR, this includes failure to provide corrective action for fecal contamination of ground water source and failure to correct significant deficiencies. Treatment technique violations require the system to provide public notification and systems in violation of treatment technique requirements are subject to enforcement actions by the State and EPA.

Triggered Monitoring – For the GWR, ground water source samples collected after a routine TC-positive routine sample collected under TCR and analyzed for a fecal indicator. Triggered monitoring consists of collection of source water samples and analysis of those samples for a fecal indicator specified by the State. For systems collecting one routine TCR sample or fewer each month, one of the

four repeat samples required under the TCR may be collected from the ground water source to satisfy the triggered ground water source monitoring requirements of the GWR. The GWR is not applicable to any source determined by the State to be ground water under the direct influence of surface water (GWUDI).

Well- For the purposes of the GWR, the term "well" includes springs, spring boxes, vertical and horizontal wells, infiltration galleries and any other method of delivering ground water.

Wholesale system – A wholesale system is a public water system that treats source water as necessary to produce finished water and then delivers some or all of that finished water to another public water system. Delivery may be through a direct connection or through the distribution system.

EPA
United States
Environmental Protection
Agency

Revised Total Coliform Rule: A Quick Reference Guide

Overview of the Rule

Title*	Revised Total Coliform Rule (RTCR) 78 FR 10269, February 13, 2013, Vol. 78, No. 30
Purpose	Increase public health protection through the reduction of potential pathways of entry for fecal contamination into distribution systems.
General Description	The RTCR establishes a maximum contaminant level (MCL) for *E. coli* and uses *E. coli* and total coliforms to initiate a "find and fix" approach to address fecal contamination that could enter into the distribution system. It requires public water systems (PWSs) to perform assessments to identify sanitary defects and subsequently take action to correct them.
Utilities Covered	The RTCR applies to all PWSs.

* This document provides a summary of federal drinking water requirements; to ensure full compliance, please consult the federal regulations at 40 CFR 141 and any approved state requirements.

Public Health Benefits

Implementation of the RTCR will result in:

- A decrease in the pathways by which fecal contamination can enter the drinking water distribution system.
- Reduction in fecal contamination *should* reduce the potential risk from all waterborne pathogens including bacteria, viruses, parasitic protozoa, and their associated illnesses.

Critical Deadlines and Requirements

For Public Water Systems

Before April 1, 2016	► PWSs must develop a written sample siting plan that identifies the system's sample collection schedule and all sample sites, including sites for routine and repeat monitoring. ► PWSs monitoring quarterly or annually must also identify additional routine monitoring sites in their sample siting plans. ► Sample siting plans are subject to state review and revision.
Beginning April 1, 2016	PWSs must comply with the RTCR requirements unless the state selects an earlier implementation date.

For State Drinking Water Agencies

By February 13, 2015	State submits final primacy program revision package to the EPA Region, including: ► Adopted State Regulations. ► Regulation Crosswalk. ► 40 CFR 142.10 Primacy Update Checklist. ► 40 CFR 142.14 and 142.15 Reporting and Recordkeeping. ► 40 CFR 142.16 Special Primacy Requirements. ► Attorney General's Enforceability Certification. NOTE: EPA regulations allow states until February 13, 2015, for this submittal. An extension of up to 2 years may be requested by the state.
Before February 13, 2015	State must submit a primacy program revision extension request if it does not plan to submit the final primacy program revision package by February 13, 2015. The state extension request is submitted to the EPA Region including all of the information required in 40 CFR 142.12(b): ► A schedule (not to exceed 2 years) for the submission of the final primacy program revision package. ► Justification that meets the federal requirements for an extension request. ► Confirmation that the state is implementing the RTCR within its scope of its current authorities and capabilities. ► An approved workload agreement with the EPA Region.
No later than February 13, 2017	For states with an approved extension, submit complete and final program revision package by the agreed upon extension date.

What are the Major Provisions?

Routine Sampling Requirements

- Total coliform samples must be collected by PWSs at sites which are representative of water quality throughout the distribution system according to a written sample siting plan subject to state review and revision.
- For PWSs collecting more than one sample per month, collect total coliform samples at regular intervals throughout the month, except that ground water systems serving 4,900 or fewer people may collect all required samples on a single day if the samples are taken from different sites.

Routine Sampling Requirements (cont.)

- Each total coliform-positive (TC+) routine sample must be tested for the presence of *E. coli*.
- If any TC+ sample is also *E. coli*-positive (EC+), then the EC+ sample result must be reported to the state by the end of the day that the PWS is notified.
- If any routine sample is TC+, repeat samples are required.
  - PWSs on quarterly or annual monitoring must take a minimum of three additional routine samples (known as additional routine monitoring) the month following a TC+ routine or repeat sample.
- Reduced monitoring may be available for PWSs using only ground water and serving 1,000 or fewer persons that meet certain additional PWS criteria.

Repeat Sampling Requirements

Within 24 hours of learning of a TC+ routine sample result, at least 3 repeat samples must be collected and analyzed for total coliform:	► One repeat sample must be collected from the same tap as the original sample. ► One repeat sample must be collected from within five service connections upstream. ► One repeat sample must be collected from within five service connections downstream.
	► The PWS may propose alternative repeat monitoring locations that are expected to better represent pathways of contamination into the distribution system.
If one or more repeat sample is TC+:	► The TC+ sample must be analyzed for the presence of *E. coli*. ► If any repeat TC+ sample is also EC+, then the EC+ sample result must be reported to the state by the end of the day that the PWS is notified. ► The PWS must collect another set of repeat samples, unless an assessment has been triggered and the PWS has notified the state.

Assessments and Corrective Action

The RTCR requires PWSs that have an indication of coliform contamination (e.g., as a result of TC+ samples, *E. coli* MCL violations, performance failure) to assess the problem and take corrective action. There are two levels of assessments (i.e., Level 1 and Level 2) based on the severity or frequency of the problem.

Purpose of Level 1 and Level 2 Assessments	To find sanitary defects at the PWS including: ► Sanitary defects that could provide a pathway of entry for microbial contamination, or ► Sanitary defects that indicate failure (existing or potential) of protective barriers against microbial contamination. *Guidance on how to conduct Level 1 and Level 2 Assessments and how to correct sanitary defects found during the Assessments can be found at:* http://water.epa.gov/lawsregs/rulesregs/sdwa/tcr/regulation_revisions.cfm.
Deadline for Completing Corrective Actions	When sanitary defects are identified during a Level 1 or Level 2 Assessment, they should be corrected as soon as possible to protect public health. The PWS must complete corrective actions by one of the following timeframes: ► No later than the time the assessment form is submitted to the state, which must be within 30 days of triggering the assessment, or ► Within state-approved timeframe which was proposed in the assessment form.

Level 1 Assessments

Conducting Level 1 Assessments	► Performed by the PWS owner or operator each time a Level 1 Assessment is triggered.
	► Upon trigger of a Level 1 Assessment, the Level 1 Assessment form must be submitted within 30 days to the state.
Level 1 Assessment Triggers	Level 1 Assessment is triggered if any one of the following occurs: ► A PWS collecting fewer than 40 samples per month has 2 or more TC+ routine/repeat samples in the same month. ► A PWS collecting at least 40 samples per month has greater than 5.0 percent of the routine/repeat samples in the same month that are TC+. ► A PWS fails to take every required repeat sample after any single TC+ sample.

Level 2 Assessments

Conducting Level 2 Assessments	► Performed by the state or state-approved entity each time a Level 2 Assessment is triggered. ► The PWS is responsible for ensuring that the Level 2 Assessment is conducted regardless of the entity conducting the Level 2 Assessment.
	► Upon trigger of a Level 2 Assessment, the Level 2 Assessment form must be submitted within 30 days to the state.
Level 2 Assessment Triggers	Level 2 Assessment is triggered if any one of the following occurs: ► A PWS incurs an *E. coli* MCL violation. ► A PWS has a second Level 1 Assessment within a rolling 12-month period. ► A PWS on state-approved annual monitoring has a Level 1 Assessment trigger in 2 consecutive years.

For additional information on the RTCR:

Call the Safe Drinking Water Hotline at 1-800-426-4791; visit the EPA website at http://water.epa.gov/lawsregs/rulesregs/sdwa/tcr/regulation_revisions.cfm; or contact your state drinking water representative.

Seasonal System Provisions

The RTCR defines seasonal systems and specifies additional requirements for these types of PWSs:

- A seasonal system is defined as a non-community water system that is not operated as a PWS on a year-round basis and starts up and shuts down at the beginning and end of each operating season.

Start-up Procedures for Seasonal Systems	At the beginning of each operating period, before serving water to the public, seasonal water systems must: ► Conduct state-approved start-up procedures. ► Certify completion of state-approved start-up procedures. ► An exemption from conducting state-approved start-up procedures may be available for seasonal systems that maintain pressure throughout the distribution system during non-operating periods.
	Examples of state-approved start-up procedures, which need to be completed prior to serving water to the public, may include one or more of the following: ► Disinfection. ► Distribution system flushing. ► Sampling for total coliform and *E. coli*. ► Site visit by state. ► Verification that any current or historical sanitary defects have been corrected.
Routine Monitoring for Seasonal Systems	► The baseline monitoring frequency for seasonal systems is monthly. ► A reduced monitoring frequency may be available for seasonal systems that use ground water only and serve fewer than 1,000 persons.

Other Provisions for the State Drinking Water Agency

Special Monitoring Evaluation	The state must perform a special monitoring evaluation at all ground water systems serving 1,000 or fewer persons during each sanitary survey to review the status of the PWS and to determine whether the sample sites and monitoring schedule need to be modified.

Major Violations

***E. coli* MCL Violation**	A PWS will receive an *E. coli* MCL violation when there is any combination of an EC+ sample result with a routine/repeat TC+ or EC+ sample result:

***E. coli* MCL Violation Occurs with the Following Sample Result Combination**

Routine	Repeat
EC+	TC+
EC+	Any missing sample
EC+	EC+
TC+	EC+
TC+	TC+ (but no *E. coli* analysis)

Treatment Technique Violation	A PWS will receive a Treatment Technique violation when any of the following occur: ► Failure to conduct a Level 1 or Level 2 Assessment within 30 days of a trigger. ► Failure to correct all sanitary defects from a Level 1 or Level 2 Assessment within 30 days of a trigger or in accordance with the state-approved timeframe. ► Failure of a seasonal system to complete state-approved start-up procedures prior to serving water to the public.

Key Points for Public Water Systems to Remember

Find and correct sanitary defects as soon as you become aware of them.

- This can help reduce *E. coli* MCL violations, which trigger a Level 2 Assessment.
- This can help reduce TC+ sample results, which may trigger a Level 1 Assessment.

Make sure to collect all routine and repeat samples as required.

- Timely and correct monitoring can help reduce triggering a Level 1 or Level 2 Assessment because:
  - Failure to conduct repeat monitoring triggers a Level 1 Assessment.
  - A Level 1 Assessment triggered twice within a certain timeframe triggers a Level 2 Assessment.

United States Environmental Protection Agency

Office of Water (4606)

EPA 816-F-01-003
June 2001

Radionuclides Rule: A Quick Reference Guide

Overview of the Rule

Title	Radionuclides Rule 66 FR 76708 December 7, 2000 Vol. 65, No. 236
Purpose	Reducing the exposure to radionuclides in drinking water will reduce the risk of cancer. This rule will also improve public health protection by reducing exposure to all radionuclides.
General Description	The rule retains the existing MCLs for combined radium-226 and radium-228, gross alpha particle radioactivity, and beta particle and photon activity. The rule regulates uranium for the first time.
Utilities Covered	Community water systems, all size categories.

Public Health Benefits

Implementation of the Radionuclides Rule will result in . . .	Reduced uranium exposure for 620,000 persons, protection from toxic kidney effects of uranium, and a reduced risk of cancer.
Estimated impacts of the Radionuclides Rule include . . .	Annual compliance costs of $81 million. Only 795 systems will have to install treatment.

Regulated Contaminants

Regulated Radionuclide	MCL	MCLG
Beta/photon emitters*	4 mrem/yr	0
Gross alpha particle	15 pCi/L	0
Combined radium-226/228	5 pCi/L	0
Uranium	30 µg/L	0

*A total of 168 individual beta particle and photon emitters may be used to calculate compliance with the MCL.

Critical Deadlines & Requirements

For Drinking Water Systems

June 2000 - December 8, 2003	When allowed by the State, data collected between these dates may be eligible for use as grandfathered data (excluding beta particle and photon emitters).
December 8, 2003	Systems begin initial monitoring under State-specified monitoring plan unless the State permits use of grandfathered data.
December 31, 2007	All systems must complete initial monitoring.

For States

December 2000 - December 2003	States work with systems to establish monitoring schedules.
December 8, 2000	States should begin to update vulnerability assessments for beta photon and particle emitters and notify systems of monitoring requirements.
Spring 2001	EPA meets and works with States to explain new rules and requirements and to initiate adoption and implementation activities.
December 8, 2002	State submits primacy revision application to EPA. (EPA approves within 90 days.)

For additional information on the Radionuclides Rule

Call the Safe Drinking Water Hotline at 1-800-426-4791; visit the EPA Web site at www.epa.gov/safewater; or contact your State drinking water representative. EPA will provide radionuclide training over the next year.

Monitoring Requirements

Gross Alpha, Combined Radium-226/228, and Uranium (1)	Beta Particle and Photon Radioactivity (1)
Initial Monitoring	
Four consecutive quarters of monitoring.	No monitoring required for most CWSs. Vulnerable CWSs (2) must sample for: • Gross beta: quarterly samples. • Tritium and Strontium-90: annual samples.
Reduced Monitoring	
If the average of the initial monitoring results for each contaminant is below the detection limit: One sample every 9 years. If the average of the initial monitoring results for each contaminant is greater than or equal to the detection limit, but less than or equal to one-half the MCL: One sample every 6 years. If the average of the initial monitoring results for each contaminant is greater than one-half the MCL, but less than or equal to the MCL: One sample every 3 years.	If the running annual average of the gross beta particle activity minus the naturally occurring potassium-40 activity is less than or equal to 50 pCi/L: One sample every 3 years.
Increased Monitoring	
A system with an entry point result above the MCL must return to quarterly sampling until 4 consecutive quarterly samples are below the MCL.	If gross beta particle activity minus the naturally occurring potassium-40 activity exceeds 50 pCi/L, the system must: • Speciate as required by the State. • Sample at the initial monitoring frequency.

(1) All samples must be collected at each entry point to the distribution system.
(2) The rule also contains requirements for CWSs using waters contaminated by effluents from nuclear facilities.

Grandfathering of Data

When allowed by the State, data collected between June, 2000 and December 8, 2003 may be used to satisfy the initial monitoring requirements if samples have been collected from:

- Each entry point to the distribution system (EPTDS).
- The distribution system, provided the system has a single EPTDS.
- The distribution system, provided the State makes a written justification explaining why the sample is representative of all EPTDS.

Applicability of the Standardized Monitoring Framework to Radionuclides

(Excluding the Beta Particle and Photon Emitters)

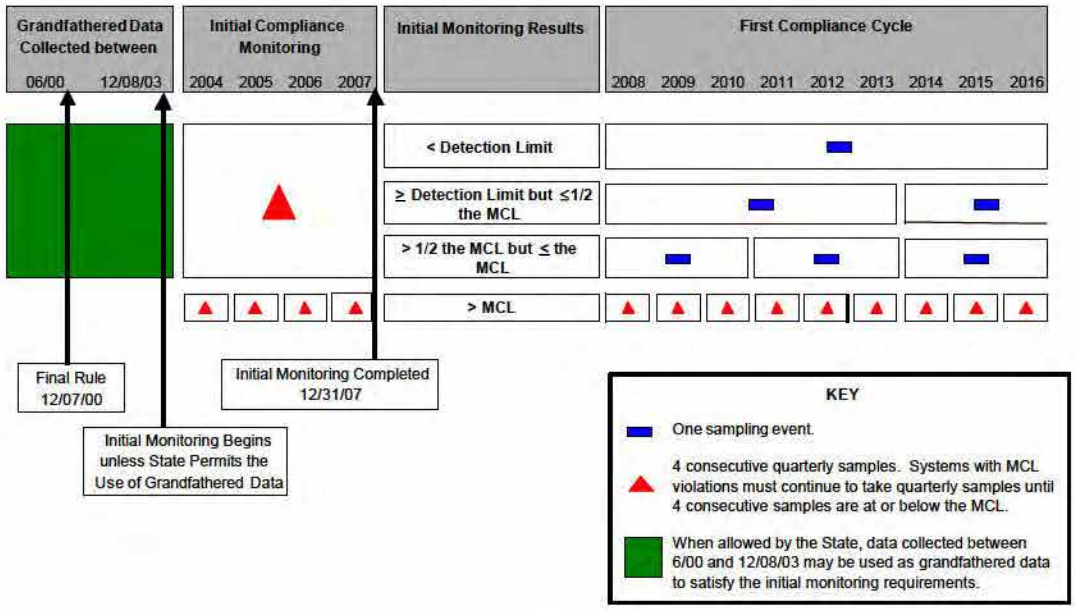

APPENDIX A.4

ADOT Airport Grand Canyon Water System Violations, Arizona Department of Environmental Quality

Arizona Department of Environmental Quality	Safe Drinking Water	Monitoring Assistance Program
County Map of Arizona	Water System Search	Help

Water System Detail Information

Water System ID #:	AZ0403010	Water System Classification:	C
Water System Name:	ADOT AIRPORT GRAND CANYON	Primary Water Source:	GWP
Principal County Served:	COCONINO	System Activity / MAP Participant:	A
		Activity Date:	08-18-2000

Group Violations

Fed Fiscal Year	Comp Prd Begin Date	Comp Prd End Date	Sample Point	Viol Type	Violation Name	Comp Achieved	Analyte Group	Analyte Group Name
2010	01-01-2010	12-31-2010	DISTRIBUTION SYSTEM	27	MONITORING, ROUTINE (DBP), MAJOR	Y	DBP	STAGE 1 DBP
2009	01-01-2008	12-31-2008	XEPDS001	03	MONITORING, ROUTINE MAJOR	Y	VOCD	DATA ENTRY-VOCS
2009	01-01-2008	12-31-2008	XEPDS001	03	MONITORING, ROUTINE MAJOR	Y	IOCC	IOCS-CWS
2009	01-01-2008	12-31-2008	DISTRIBUTION SYSTEM	27	MONITORING, ROUTINE (DBP), MAJOR	Y	DBP	STAGE 1 DBP

Individual Violations

Violation No.	Comp Prd Begin Date	Comp Prd End Date	Sample Point	Viol Type	Violation Name	Comp Achieved	Analyte Code	Analyte Name
2018-21607	2017-11-03 00:00:00.0	2018-04-16 00:00:00.0		66	LEAD CONSUMER NOTICE (LCR)	Y	5000	LEAD & COPPER RULE
2018-21604	2017-09-01 00:00:00.0	2017-09-30 00:00:00.0	DISTRIBUTION SYSTEM	27	MONITORING, ROUTINE (DBP), MAJOR	Y	0999	CHLORINE
2018-21605	2017-08-01 00:00:00.0	2017-08-31 00:00:00.0	DISTRIBUTION SYSTEM	27	MONITORING, ROUTINE (DBP), MAJOR	Y	0999	CHLORINE
2018-21606	2017-07-01 00:00:00.0	2017-07-31 00:00:00.0	DISTRIBUTION SYSTEM	27	MONITORING, ROUTINE (DBP), MAJOR	Y	0999	CHLORINE
2017-21603	2017-05-01 00:00:00.0	2017-05-31 00:00:00.0		4B	REPORT SAMPLE RESULT/FAIL MONITOR RTCR	Y	3014	E. COLI
2017-21599	2016-12-01 00:00:00.0	2016-12-31 00:00:00.0	DISTRIBUTION SYSTEM	27	MONITORING, ROUTINE (DBP), MAJOR	Y	0999	CHLORINE
2017-21601	2016-10-01 00:00:00.0	2016-10-31 00:00:00.0	DISTRIBUTION SYSTEM	27	MONITORING, ROUTINE (DBP), MAJOR	Y	0999	CHLORINE
2017-21600	2016-11-01 00:00:00.0	2016-11-30 00:00:00.0	DISTRIBUTION SYSTEM	27	MONITORING, ROUTINE (DBP), MAJOR	Y	0999	CHLORINE
2017-21597	2016-07-01 00:00:00.0	2017-03-17 00:00:00.0		71	CCR REPORT	Y	7000	CONSUMER CONFIDENCE RULE
2017-21598	2016-10-01 00:00:00.0	2017-03-08 00:00:00.0		72	CCR ADEQUACY/AVAILABILITY/CONTENT	Y	7000	CONSUMER CONFIDENCE RULE
2017-21596	2016-09-01 00:00:00.0	2016-09-30 00:00:00.0	DISTRIBUTION SYSTEM	27	MONITORING, ROUTINE (DBP), MAJOR	Y	0999	CHLORINE
2017-21595	2016-04-01 00:00:00.0	2016-04-30 00:00:00.0	DISTRIBUTION SYSTEM	27	MONITORING, ROUTINE (DBP), MAJOR	Y	0999	CHLORINE
2017-21594	2016-05-01 00:00:00.0	2016-05-31 00:00:00.0	DISTRIBUTION SYSTEM	27	MONITORING, ROUTINE (DBP), MAJOR	Y	0999	CHLORINE
2017-21593	2016-06-01 00:00:00.0	2016-06-30 00:00:00.0	DISTRIBUTION SYSTEM	27	MONITORING, ROUTINE (DBP), MAJOR	Y	0999	CHLORINE
2017-21592	2016-07-01 00:00:00.0	2016-07-31 00:00:00.0	DISTRIBUTION SYSTEM	27	MONITORING, ROUTINE (DBP), MAJOR	Y	0999	CHLORINE
2017-	2016-08-	2016-08-	DISTRIBUTION		MONITORING, ROUTINE (DBP),			

21591	01 00:00:00.0	31 00:00:00.0	SYSTEM	27	MAJOR	Y	0999	CHLORINE
2016-21581	2015-12-01 00:00:00.0	2015-12-31 00:00:00.0	DISTRIBUTION SYSTEM	27	MONITORING, ROUTINE (DBP), MAJOR	Y	0999	CHLORINE
2016-21580	2015-11-01 00:00:00.0	2015-11-30 00:00:00.0	DISTRIBUTION SYSTEM	27	MONITORING, ROUTINE (DBP), MAJOR	Y	0999	CHLORINE
2016-21579	2015-10-01 00:00:00.0	2015-10-31 00:00:00.0		27	MONITORING, ROUTINE (DBP), MAJOR	Y	0999	CHLORINE
2016-21578	2016-01-01 00:00:00.0	2016-01-31 00:00:00.0	DISTRIBUTION SYSTEM	27	MONITORING, ROUTINE (DBP), MAJOR	Y	0999	CHLORINE
2016-21577	2016-02-01 00:00:00.0	2016-02-29 00:00:00.0	DISTRIBUTION SYSTEM	27	MONITORING, ROUTINE (DBP), MAJOR	Y	0999	CHLORINE
2016-21576	2016-03-01 00:00:00.0	2016-03-31 00:00:00.0	DISTRIBUTION SYSTEM	27	MONITORING, ROUTINE (DBP), MAJOR	Y	0999	CHLORINE
2016-21572	2015-08-01 00:00:00.0	2015-08-31 00:00:00.0		23	MONITORING (TCR), ROUTINE MAJOR	Y	3100	COLIFORM (TCR)
2015-21571	2015-06-01 00:00:00.0	2015-06-30 00:00:00.0	DISTRIBUTION SYSTEM	27	MONITORING, ROUTINE (DBP), MAJOR	Y	0999	CHLORINE
2015-21569	2015-04-01 00:00:00.0	2015-04-30 00:00:00.0	DISTRIBUTION SYSTEM	27	MONITORING, ROUTINE (DBP), MAJOR	Y	0999	CHLORINE
2015-21570	2015-05-01 00:00:00.0	2015-05-31 00:00:00.0	DISTRIBUTION SYSTEM	27	MONITORING, ROUTINE (DBP), MAJOR	Y	0999	CHLORINE
2015-21566	2014-10-01 00:00:00.0	2014-10-31 00:00:00.0	DISTRIBUTION SYSTEM	27	MONITORING, ROUTINE (DBP), MAJOR	Y	0999	CHLORINE
2015-21568	2014-12-01 00:00:00.0	2014-12-31 00:00:00.0	DISTRIBUTION SYSTEM	27	MONITORING, ROUTINE (DBP), MAJOR	Y	0999	CHLORINE
2015-21567	2014-11-01 00:00:00.0	2014-11-30 00:00:00.0	DISTRIBUTION SYSTEM	27	MONITORING, ROUTINE (DBP), MAJOR	Y	0999	CHLORINE
2015-21563	2014-03-01 00:00:00.0	2014-03-31 00:00:00.0	DISTRIBUTION SYSTEM	27	MONITORING, ROUTINE (DBP), MAJOR	Y	0999	CHLORINE
2015-21560	2014-06-01 00:00:00.0	2014-06-30 00:00:00.0	DISTRIBUTION SYSTEM	27	MONITORING, ROUTINE (DBP), MAJOR	Y	0999	CHLORINE
2015-21561	2014-05-01 00:00:00.0	2014-05-31 00:00:00.0	DISTRIBUTION SYSTEM	27	MONITORING, ROUTINE (DBP), MAJOR	Y	0999	CHLORINE
2015-21565	2014-01-01 00:00:00.0	2014-01-31 00:00:00.0	DISTRIBUTION SYSTEM	27	MONITORING, ROUTINE (DBP), MAJOR	Y	0999	CHLORINE
2015-21564	2014-02-01 00:00:00.0	2014-02-28 00:00:00.0	DISTRIBUTION SYSTEM	27	MONITORING, ROUTINE (DBP), MAJOR	Y	0999	CHLORINE
2015-21562	2014-04-01 00:00:00.0	2014-04-30 00:00:00.0	DISTRIBUTION SYSTEM	27	MONITORING, ROUTINE (DBP), MAJOR	Y	0999	CHLORINE
2015-21559	2014-07-01 00:00:00.0	2014-07-31 00:00:00.0	DISTRIBUTION SYSTEM	27	MONITORING, ROUTINE (DBP), MAJOR	Y	0999	CHLORINE
2015-21558	2014-08-01 00:00:00.0	2014-08-31 00:00:00.0	DISTRIBUTION SYSTEM	27	MONITORING, ROUTINE (DBP), MAJOR	Y	0999	CHLORINE
2015-21557	2014-09-01 00:00:00.0	2014-09-30 00:00:00.0	DISTRIBUTION SYSTEM	27	MONITORING, ROUTINE (DBP), MAJOR	Y	0999	CHLORINE
2014-21541	2010-12-01 00:00:00.0	2010-12-31 00:00:00.0	DISTRIBUTION SYSTEM	27	MONITORING, ROUTINE (DBP), MAJOR	Y	0999	CHLORINE
2014-21542	2010-11-01 00:00:00.0	2010-11-30 00:00:00.0	DISTRIBUTION SYSTEM	27	MONITORING, ROUTINE (DBP), MAJOR	Y	0999	CHLORINE

2014-21543	2010-10-01 00:00:00.0	2010-10-31 00:00:00.0	DISTRIBUTION SYSTEM	27	MONITORING, ROUTINE (DBP), MAJOR	Y	0999	CHLORINE
2014-21556	2013-03-01 00:00:00.0	2013-03-31 00:00:00.0	DISTRIBUTION SYSTEM	27	MONITORING, ROUTINE (DBP), MAJOR	Y	0999	CHLORINE
2014-21555	2012-05-01 00:00:00.0	2012-05-31 00:00:00.0	DISTRIBUTION SYSTEM	27	MONITORING, ROUTINE (DBP), MAJOR	Y	0999	CHLORINE
2014-21554	2012-06-01 00:00:00.0	2012-06-30 00:00:00.0	DISTRIBUTION SYSTEM	27	MONITORING, ROUTINE (DBP), MAJOR	Y	0999	CHLORINE
2014-21553	2012-04-01 00:00:00.0	2012-04-30 00:00:00.0	DISTRIBUTION SYSTEM	27	MONITORING, ROUTINE (DBP), MAJOR	Y	0999	CHLORINE
2014-21546	2010-07-01 00:00:00.0	2010-07-31 00:00:00.0	DISTRIBUTION SYSTEM	27	MONITORING, ROUTINE (DBP), MAJOR	Y	0999	CHLORINE
2014-21545	2010-08-01 00:00:00.0	2010-08-31 00:00:00.0	DISTRIBUTION SYSTEM	27	MONITORING, ROUTINE (DBP), MAJOR	Y	0999	CHLORINE
2014-21544	2010-09-01 00:00:00.0	2010-09-30 00:00:00.0	DISTRIBUTION SYSTEM	27	MONITORING, ROUTINE (DBP), MAJOR	Y	0999	CHLORINE
2014-21531	2008-04-01 00:00:00.0	2008-04-30 00:00:00.0	DISTRIBUTION SYSTEM	27	MONITORING, ROUTINE (DBP), MAJOR	Y	0999	CHLORINE
2014-21528	2005-11-01 00:00:00.0	2005-11-30 00:00:00.0	DISTRIBUTION SYSTEM	27	MONITORING, ROUTINE (DBP), MAJOR	Y	0999	CHLORINE
2014-21526	2004-09-01 00:00:00.0	2004-09-30 00:00:00.0	DISTRIBUTION SYSTEM	27	MONITORING, ROUTINE (DBP), MAJOR	Y	0999	CHLORINE
2014-21522	2013-10-01 00:00:00.0	2014-09-30 00:00:00.0		72	CCR ADEQUACY/AVAILABILITY/CONTENT	Y	7000	CONSUMER CONFIDENCE RULE
2014-21521	2013-07-01 00:00:00.0	2014-06-30 00:00:00.0		71	CCR REPORT	Y	7000	CONSUMER CONFIDENCE RULE
2014-21520	2013-02-01 00:00:00.0	2013-02-28 00:00:00.0	DISTRIBUTION SYSTEM	27	MONITORING, ROUTINE (DBP), MAJOR	Y	0999	CHLORINE
2014-21519	2013-10-01 00:00:00.0	2013-10-31 00:00:00.0	DISTRIBUTION SYSTEM	27	MONITORING, ROUTINE (DBP), MAJOR	Y	0999	CHLORINE
2014-21518	2013-01-01 00:00:00.0	2013-01-31 00:00:00.0	DISTRIBUTION SYSTEM	27	MONITORING, ROUTINE (DBP), MAJOR	Y	0999	CHLORINE
2014-21517	2013-11-01 00:00:00.0	2013-11-30 00:00:00.0	DISTRIBUTION SYSTEM	27	MONITORING, ROUTINE (DBP), MAJOR	Y	0999	CHLORINE
2014-21516	2013-12-01 00:00:00.0	2013-12-31 00:00:00.0	DISTRIBUTION SYSTEM	27	MONITORING, ROUTINE (DBP), MAJOR	Y	0999	CHLORINE
2013-21510	2008-07-01 00:00:00.0	2009-06-30 00:00:00.0		71	CCR REPORT	Y	7000	CONSUMER CONFIDENCE RULE
2013-21509	2003-07-01 00:00:00.0	2004-06-30 00:00:00.0		71	CCR REPORT	Y	7000	CONSUMER CONFIDENCE RULE
2013-21508	2002-07-01 00:00:00.0	2003-06-30 00:00:00.0		71	CCR REPORT	Y	7000	CONSUMER CONFIDENCE RULE
2012-21505	2011-02-01 00:00:00.0	2011-02-28 00:00:00.0	CC001 - 03312	34	MONITOR GWR TRIGGERED/ADDITONAL, MAJOR	Y	3014	E. COLI
2011-21492	2010-12-01 00:00:00.0	2010-12-31 00:00:00.0		24	MONITORING (TCR), ROUTINE MINOR	Y	3100	COLIFORM (TCR)
2010-21488	2009-01-01 00:00:00.0	2009-12-31 00:00:00.0	XEPDS001	03	MONITORING, ROUTINE MAJOR	Y	1024	CYANIDE
2010-	2009-01-01	2009-12-31	XEPDS001	03	MONITORING, ROUTINE MAJOR	Y	1052	SODIUM

21489	00:00:00.0	00:00:00.0						
2010-21490	2009-01-01 00:00:00.0	2009-12-31 00:00:00.0	XEPDS001	03	MONITORING, ROUTINE MAJOR	Y	1025	FLUORIDE
2010-21487	2009-01-01 00:00:00.0	2009-12-31 00:00:00.0	XEPDS001	03	MONITORING, ROUTINE MAJOR	Y	1040	NITRATE
2009-21480	2008-01-01 00:00:00.0	2008-12-31 00:00:00.0	XEPDS001	03	MONITORING, ROUTINE MAJOR	Y	1040	NITRATE
2009-21481	2008-10-01 00:00:00.0	2008-10-31 00:00:00.0	DISTRIBUTION SYSTEM	27	MONITORING, ROUTINE (DBP), MAJOR	Y	0999	CHLORINE
2009-21482	2008-11-01 00:00:00.0	2008-11-30 00:00:00.0	DISTRIBUTION SYSTEM	27	MONITORING, ROUTINE (DBP), MAJOR	Y	0999	CHLORINE
2009-21483	2008-12-01 00:00:00.0	2008-12-31 00:00:00.0	DISTRIBUTION SYSTEM	27	MONITORING, ROUTINE (DBP), MAJOR	Y	0999	CHLORINE
2009-21436	2007-07-01 00:00:00.0	2008-06-30 00:00:00.0		71	CCR REPORT	Y	7000	CONSUMER CONFIDENCE RULE
2008-21433	2006-01-01 00:00:00.0	2006-12-31 00:00:00.0	DISTRIBUTION SYSTEM	27	MONITORING, ROUTINE (DBP), MAJOR	Y	2456	TOTAL HALOACETIC ACIDS (HAA5)
2008-21431	2008-05-01 00:00:00.0	2008-05-31 00:00:00.0	DISTRIBUTION SYSTEM	27	MONITORING, ROUTINE (DBP), MAJOR	Y	0999	CHLORINE
2008-21432	2008-06-01 00:00:00.0	2008-06-30 00:00:00.0	DISTRIBUTION SYSTEM	27	MONITORING, ROUTINE (DBP), MAJOR	Y	0999	CHLORINE
2008-21417	2004-01-01 00:00:00.0	2004-12-31 00:00:00.0		52	FOLLOW-UP OR ROUTINE TAP M/R (LCR)	Y	5000	LEAD & COPPER RULE
2008-21416	2005-01-01 00:00:00.0	2005-12-31 00:00:00.0		52	FOLLOW-UP OR ROUTINE TAP M/R (LCR)	Y	5000	LEAD & COPPER RULE
2007-21409	2007-06-01 00:00:00.0	2007-06-30 00:00:00.0		25	MONITORING (TCR), REPEAT MAJOR	Y	3100	COLIFORM (TCR)
2007-21407	2006-07-01 00:00:00.0	2007-06-30 00:00:00.0		71	CCR REPORT	Y	7000	CONSUMER CONFIDENCE RULE
2006-21406	2006-04-01 00:00:00.0	2006-06-30 00:00:00.0	DISTRIBUTION SYSTEM	02	MCL, AVERAGE	Y	2456	TOTAL HALOACETIC ACIDS (HAA5)
2006-21306	2006-01-01 00:00:00.0	2006-03-31 00:00:00.0	DISTRIBUTION SYSTEM	02	MCL, AVERAGE	Y	2456	TOTAL HALOACETIC ACIDS (HAA5)
2006-21206	2005-10-01 00:00:00.0	2005-12-31 00:00:00.0	DISTRIBUTION SYSTEM	02	MCL, AVERAGE	Y	2456	TOTAL HALOACETIC ACIDS (HAA5)
2006-21106	2005-10-01 00:00:00.0	2005-10-31 00:00:00.0	DISTRIBUTION SYSTEM	27	MONITORING, ROUTINE (DBP), MAJOR	Y	0999	CHLORINE
2005-19005	2004-07-01 00:00:00.0	2005-06-30 00:00:00.0		71	CCR REPORT	Y	7000	CONSUMER CONFIDENCE RULE
2005-18605	2004-05-01 00:00:00.0	2004-05-31 00:00:00.0	DISTRIBUTION SYSTEM	27	MONITORING, ROUTINE (DBP), MAJOR	Y	0999	CHLORINE
2004-18204	2004-01-01 00:00:00.0	2004-01-31 00:00:00.0	DISTRIBUTION SYSTEM	27	MONITORING, ROUTINE (DBP), MAJOR	Y	0999	CHLORINE
2004-18404	2004-03-01 00:00:00.0	2004-03-31 00:00:00.0	DISTRIBUTION SYSTEM	27	MONITORING, ROUTINE (DBP), MAJOR	Y	0999	CHLORINE
2004-18304	2004-02-01 00:00:00.0	2004-02-29 00:00:00.0	DISTRIBUTION SYSTEM	27	MONITORING, ROUTINE (DBP), MAJOR	Y	0999	CHLORINE
2005-18705	2004-06-01 00:00:00.0	2004-06-30 00:00:00.0	DISTRIBUTION SYSTEM	27	MONITORING, ROUTINE (DBP), MAJOR	Y	0999	CHLORINE
	2004-04-	2004-04-						

2005-18505	01 00:00:00.0	30 00:00:00.0	DISTRIBUTION SYSTEM	27	MONITORING, ROUTINE (DBP), MAJOR	Y	0999	CHLORINE
2003-12603	2002-01-01 00:00:00.0	2004-12-31 00:00:00.0	XEPDS001	03	MONITORING, ROUTINE MAJOR	Y	2105	2,4-D
2003-12703	2002-01-01 00:00:00.0	2004-12-31 00:00:00.0	XEPDS001	03	MONITORING, ROUTINE MAJOR	Y	2110	2,4,5-TP
2003-10203	2002-01-01 00:00:00.0	2002-12-31 00:00:00.0	XEPDS001	03	MONITORING, ROUTINE MAJOR	Y	2274	HEXACHLOROBENZENE
2003-10303	2002-01-01 00:00:00.0	2002-12-31 00:00:00.0	XEPDS001	03	MONITORING, ROUTINE MAJOR	Y	2306	BENZO(A)PYRENE
2003-12803	2002-01-01 00:00:00.0	2004-12-31 00:00:00.0	XEPDS001	03	MONITORING, ROUTINE MAJOR	Y	2326	PENTACHLOROPHENOL
2003-12903	2002-01-01 00:00:00.0	2004-12-31 00:00:00.0	XEPDS001	03	MONITORING, ROUTINE MAJOR	Y	2931	1,2-DIBROMO-3-CHLOROPROPANE
2003-13003	2002-01-01 00:00:00.0	2004-12-31 00:00:00.0	XEPDS001	03	MONITORING, ROUTINE MAJOR	Y	2946	ETHYLENE DIBROMIDE
2003-13103	2002-01-01 00:00:00.0	2004-12-31 00:00:00.0	XEPDS001	03	MONITORING, ROUTINE MAJOR	Y	2959	CHLORDANE
2003-9303	2002-01-01 00:00:00.0	2002-12-31 00:00:00.0	XEPDS001	03	MONITORING, ROUTINE MAJOR	Y	2005	ENDRIN
2003-11903	2002-01-01 00:00:00.0	2004-12-31 00:00:00.0	XEPDS001	03	MONITORING, ROUTINE MAJOR	Y	2010	BHC-GAMMA
2003-12003	2002-01-01 00:00:00.0	2004-12-31 00:00:00.0	XEPDS001	03	MONITORING, ROUTINE MAJOR	Y	2015	METHOXYCHLOR
2003-12103	2002-01-01 00:00:00.0	2004-12-31 00:00:00.0	XEPDS001	03	MONITORING, ROUTINE MAJOR	Y	2020	TOXAPHENE
2003-9403	2002-01-01 00:00:00.0	2002-12-31 00:00:00.0	XEPDS001	03	MONITORING, ROUTINE MAJOR	Y	2031	DALAPON
2003-9503	2002-01-01 00:00:00.0	2002-12-31 00:00:00.0	XEPDS001	03	MONITORING, ROUTINE MAJOR	Y	2032	DIQUAT
2003-9603	2002-01-01 00:00:00.0	2002-12-31 00:00:00.0	XEPDS001	03	MONITORING, ROUTINE MAJOR	Y	2035	DI(2-ETHYLHEXYL) ADIPATE
2003-9703	2002-01-01 00:00:00.0	2002-12-31 00:00:00.0	XEPDS001	03	MONITORING, ROUTINE MAJOR	Y	2037	SIMAZINE
2003-9803	2002-01-01 00:00:00.0	2002-12-31 00:00:00.0	XEPDS001	03	MONITORING, ROUTINE MAJOR	Y	2039	DI(2-ETHYLHEXYL) PHTHALATE
2003-9903	2002-01-01 00:00:00.0	2002-12-31 00:00:00.0	XEPDS001	03	MONITORING, ROUTINE MAJOR	Y	2040	PICLORAM
2003-10003	2002-01-01 00:00:00.0	2002-12-31 00:00:00.0	XEPDS001	03	MONITORING, ROUTINE MAJOR	Y	2041	DINOSEB
2003-10103	2002-01-01 00:00:00.0	2002-12-31 00:00:00.0	XEPDS001	03	MONITORING, ROUTINE MAJOR	Y	2042	HEXACHLOROCYCLOPENTADIENE
2003-12203	2002-01-01 00:00:00.0	2004-12-31 00:00:00.0	XEPDS001	03	MONITORING, ROUTINE MAJOR	Y	2050	ATRAZINE
2003-12303	2002-01-01 00:00:00.0	2004-12-31 00:00:00.0	XEPDS001	03	MONITORING, ROUTINE MAJOR	Y	2051	LASSO
2003-12403	2002-01-01 00:00:00.0	2004-12-31 00:00:00.0	XEPDS001	03	MONITORING, ROUTINE MAJOR	Y	2065	HEPTACHLOR
2003-12503	2002-01-01 00:00:00.0	2004-12-31 00:00:00.0	XEPDS001	03	MONITORING, ROUTINE MAJOR	Y	2067	HEPTACHLOR EPOXIDE

2003-18103	2002-10-01 00:00:00.0	2002-10-31 00:00:00.0		41	RES DISINFECT CONCENTRATION (SWTR)	Y	0999	CHLORINE
2002-18002	2002-04-01 00:00:00.0	2002-04-30 00:00:00.0		41	RES DISINFECT CONCENTRATION (SWTR)	Y	0999	CHLORINE
2002-17902	2001-12-01 00:00:00.0	2001-12-31 00:00:00.0		41	RES DISINFECT CONCENTRATION (SWTR)	Y	0999	CHLORINE
2001-17801	2001-08-01 00:00:00.0	2001-08-31 00:00:00.0		41	RES DISINFECT CONCENTRATION (SWTR)	Y	0999	CHLORINE
2000-5200	2000-04-01 00:00:00.0	2000-06-30 00:00:00.0	XEPDS001	03	MONITORING, ROUTINE MAJOR	Y	1040	NITRATE
2000-300	2000-06-01 00:00:00.0	2000-06-30 00:00:00.0		23	MONITORING (TCR), ROUTINE MAJOR	Y	3100	COLIFORM (TCR)
2000-400	2000-05-01 00:00:00.0	2000-05-31 00:00:00.0		23	MONITORING (TCR), ROUTINE MAJOR	Y	3100	COLIFORM (TCR)
2000-5100	2000-01-01 00:00:00.0	2000-03-31 00:00:00.0	XEPDS001	03	MONITORING, ROUTINE MAJOR	Y	1040	NITRATE
2000-500	2000-03-01 00:00:00.0	2000-03-31 00:00:00.0		25	MONITORING (TCR), REPEAT MAJOR	Y	3100	COLIFORM (TCR)
2000-200	2000-02-01 00:00:00.0	2000-02-29 00:00:00.0		23	MONITORING (TCR), ROUTINE MAJOR	Y	3100	COLIFORM (TCR)
2000-600	2000-01-01 00:00:00.0	2000-01-31 00:00:00.0		25	MONITORING (TCR), REPEAT MAJOR	Y	3100	COLIFORM (TCR)
2000-5000	1999-10-01 00:00:00.0	1999-12-31 00:00:00.0	XEPDS001	03	MONITORING, ROUTINE MAJOR	Y	1040	NITRATE
2000-4900	1999-01-01 00:00:00.0	1999-12-31 00:00:00.0	XEPDS001	03	MONITORING, ROUTINE MAJOR	Y	1052	SODIUM
2000-11700	1999-01-01 00:00:00.0	1999-12-31 00:00:00.0	XEPDS001	03	MONITORING, ROUTINE MAJOR	Y	2274	HEXACHLOROBENZENE
2000-11800	1999-01-01 00:00:00.0	1999-12-31 00:00:00.0	XEPDS001	03	MONITORING, ROUTINE MAJOR	Y	2306	BENZO(A)PYRENE
2000-11600	1999-01-01 00:00:00.0	1999-12-31 00:00:00.0	XEPDS001	03	MONITORING, ROUTINE MAJOR	Y	2063	2,3,7,8-TCDD
2000-11500	1999-01-01 00:00:00.0	1999-12-31 00:00:00.0	XEPDS001	03	MONITORING, ROUTINE MAJOR	Y	2042	HEXACHLOROCYCLOPENTADIENE
2000-11400	1999-01-01 00:00:00.0	1999-12-31 00:00:00.0	XEPDS001	03	MONITORING, ROUTINE MAJOR	Y	2041	DINOSEB
2000-11300	1999-01-01 00:00:00.0	1999-12-31 00:00:00.0	XEPDS001	03	MONITORING, ROUTINE MAJOR	Y	2040	PICLORAM
2000-11200	1999-01-01 00:00:00.0	1999-12-31 00:00:00.0	XEPDS001	03	MONITORING, ROUTINE MAJOR	Y	2039	DI(2-ETHYLHEXYL) PHTHALATE
2000-11100	1999-01-01 00:00:00.0	1999-12-31 00:00:00.0	XEPDS001	03	MONITORING, ROUTINE MAJOR	Y	2037	SIMAZINE
2000-11000	1999-01-01 00:00:00.0	1999-12-31 00:00:00.0	XEPDS001	03	MONITORING, ROUTINE MAJOR	Y	2036	OXAMYL
2000-10900	1999-01-01 00:00:00.0	1999-12-31 00:00:00.0	XEPDS001	03	MONITORING, ROUTINE MAJOR	Y	2035	DI(2-ETHYLHEXYL) ADIPATE
2000-10800	1999-01-01 00:00:00.0	1999-12-31 00:00:00.0	XEPDS001	03	MONITORING, ROUTINE MAJOR	Y	2034	GLYPHOSATE
2000-	1999-01-01	1999-12-31	XEPDS001	03	MONITORING, ROUTINE MAJOR	Y	2033	ENDOTHALL

10700	00:00:00.0	00:00:00.0						
2000-10600	1999-01-01 00:00:00.0	1999-12-31 00:00:00.0	XEPDS001	03	MONITORING, ROUTINE MAJOR	Y	2032	DIQUAT
2000-10500	1999-01-01 00:00:00.0	1999-12-31 00:00:00.0	XEPDS001	03	MONITORING, ROUTINE MAJOR	Y	2031	DALAPON
2000-10400	1999-01-01 00:00:00.0	1999-12-31 00:00:00.0	XEPDS001	03	MONITORING, ROUTINE MAJOR	Y	2005	ENDRIN
2000-4800	1995-12-31 00:00:00.0	1996-12-30 00:00:00.0		03	MONITORING, ROUTINE MAJOR	Y	1032	MANGANESE
2000-3600	1995-12-31 00:00:00.0	1996-12-30 00:00:00.0		03	MONITORING, ROUTINE MAJOR	Y	1050	SILVER
2000-3700	1995-12-31 00:00:00.0	1996-12-30 00:00:00.0		03	MONITORING, ROUTINE MAJOR	Y	1095	ZINC
2000-3800	1995-12-31 00:00:00.0	1996-12-30 00:00:00.0		03	MONITORING, ROUTINE MAJOR	Y	1915	HARDNESS, TOTAL (AS CACO3)
2000-3900	1995-12-31 00:00:00.0	1996-12-30 00:00:00.0		03	MONITORING, ROUTINE MAJOR	Y	1925	PH
2000-4000	1995-12-31 00:00:00.0	1996-12-30 00:00:00.0		03	MONITORING, ROUTINE MAJOR	Y	1927	ALKALINITY, TOTAL
2000-4700	1995-12-31 00:00:00.0	1996-12-30 00:00:00.0		03	MONITORING, ROUTINE MAJOR	Y	1031	MAGNESIUM
2000-4600	1995-12-31 00:00:00.0	1996-12-30 00:00:00.0		03	MONITORING, ROUTINE MAJOR	Y	1030	LEAD
2000-4500	1995-12-31 00:00:00.0	1996-12-30 00:00:00.0		03	MONITORING, ROUTINE MAJOR	Y	1028	IRON
2000-4400	1995-12-31 00:00:00.0	1996-12-30 00:00:00.0		03	MONITORING, ROUTINE MAJOR	Y	1022	COPPER, FREE
2000-3500	1993-12-31 00:00:00.0	1994-12-30 00:00:00.0		03	MONITORING, ROUTINE MAJOR	Y	1045	SELENIUM
2000-4200	1995-12-31 00:00:00.0	1996-12-30 00:00:00.0		03	MONITORING, ROUTINE MAJOR	Y	1016	CALCIUM
2000-4300	1995-12-31 00:00:00.0	1996-12-30 00:00:00.0		03	MONITORING, ROUTINE MAJOR	Y	1017	CHLORIDE
2000-4100	1995-12-31 00:00:00.0	1996-12-30 00:00:00.0		03	MONITORING, ROUTINE MAJOR	Y	1930	TDS
2000-3400	1999-07-01 00:00:00.0	1999-09-30 00:00:00.0	XEPDS001	03	MONITORING, ROUTINE MAJOR	Y	1040	NITRATE
1999-3399	1999-04-01 00:00:00.0	1999-06-30 00:00:00.0	XEPDS001	03	MONITORING, ROUTINE MAJOR	Y	1040	NITRATE
1999-799	1999-06-01 00:00:00.0	1999-06-30 00:00:00.0		23	MONITORING (TCR), ROUTINE MAJOR	Y	3100	COLIFORM (TCR)
1999-3299	1999-01-01 00:00:00.0	1999-03-31 00:00:00.0	XEPDS001	03	MONITORING, ROUTINE MAJOR	Y	1040	NITRATE
1999-3199	1998-10-01 00:00:00.0	1998-12-31 00:00:00.0	XEPDS001	03	MONITORING, ROUTINE MAJOR	Y	1040	NITRATE
1999-3099	1998-01-01 00:00:00.0	1998-12-31 00:00:00.0	XEPDS001	03	MONITORING, ROUTINE MAJOR	Y	1036	NICKEL

Appendix 4.2.4

Additional Rules Governing Surface Water Treatment Facilities

EPA
United States
Environmental Protection
Agency

Comprehensive Surface Water Treatment Rules Quick Reference Guide: Systems Using Conventional or Direct Filtration

Overview of the Rules

Title	**Surface Water Treatment Rule** (SWTR) - 40 CFR 141.70-141.75 **Interim Enhanced Surface Water Treatment Rule** (IESWTR) - 40 CFR 141.170-141.175 **Filter Backwash Recycling Rule** (FBRR) - 40 CFR 141.76 **Long Term 1 Enhanced Surface Water Treatment Rule** (LT1ESWTR) - 40 CFR 141.500-141.571
Purpose	Improve public health protection through the control of microbial contaminants, particularly viruses, *Giardia*, and *Cryptosporidium*.
General Description	The **Surface Water Treatment Rules**: ▸ Applies to all public water systems (PWSs) using surface water or ground water under the direct influence of surface water (GWUDI), otherwise known as "**Subpart H systems.**" ▸ Requires <u>all</u> Subpart H systems to disinfect. ▸ Requires Subpart H systems to filter unless specific filter avoidance criteria are met. ▸ Requires individual filter monitoring and establishes combined filter effluent (CFE) limits. ▸ Applies a treatment technique requirement for control of microbials.

Overview of Requirements

The purpose of this table is show how the requirements for the IESWTR and LT1ESWTR build on the existing requirements established in the original SWTR.

APPLICABILITY: PWSs that use surface water or ground water under the direct influence of surface water (Subpart H) that practice conventional or direct filtration.		**Final Rule Dates**			
		SWTR 1989	**IESWTR 1998**	**LT1ESWTR 2002**	**FBRR 2001**
Population Served	≥10,000	✓	✓		✓
	< 10,000	✓	N/A (except for sanitary survey provisions)	✓	✓
Regulated Pathogens	99.99% (4-log) removal/inactivation of viruses	✓	Regulated under SWTR	Regulated under SWTR	Regulated under SWTR
	99.9% (3-log) removal/inactivation of *Giardia lamblia*	✓	Regulated under SWTR	Regulated under SWTR	Regulated under SWTR
	99% (2-log) removal of Cryptosporidium		✓	✓	Regulated under IESWTR & LT1ESWTR
Residual Disinfectant Requirements	Entrance to distribution system (≥0.2 mg/L)	✓	Regulated under SWTR	Regulated under SWTR	
	Detectable in the distribution system	✓	Regulated under SWTR	Regulated under SWTR	
Turbidity Performance Standards	Combined Filter Effluent	✓	✓	✓	
	Individual Filter Effluent		✓	✓	
Disinfection Profiling & Benchmarking	Systems must profile inactivation levels and generate benchmark, if required		✓	✓	
Sanitary Surveys (state requirement)	CWS: Every 3 years NCWS: Every 5 years		✓	Regulated under IESWTR	
Covered Finished Reservoirs/Water Storage Facilities (new construction only)			✓	✓	
Operated by Qualified Personnel as Specified by State		✓	Regulated under SWTR	Regulated under SWTR	Regulated under SWTR

(CWS) Community Water System (NCWS) Non-community Water System

Turbidity

There are two ways turbidity is measured: **Combined Filter Effluent (CFE)** and **Individual Filter Effluent (IFE)**.

Turbidity: Monitoring and Reporting Requirements

Turbidity Reporting Requirements *(Reports due by the 10th day of the following month the system serves water to the public.)*	**Monitoring/ Recording Frequency**	**SWTR As of June 29, 1993**	**IESWTR ≥ 10,000 people As of January 1, 2002**	**LT1ESWTR < 10,000 people As of January 1, 2005**
CFE 95% Value Report total number of CFE measurements and number and percentage of CFE measurements ≤ 95th % limit.	At least every 4 hours*	≤ 0.5 NTU	≤ 0.3 NTU	≤ 0.3 NTU
CFE Maximum Value Report date and value of any CFE measurement that exceeded CFE maximum limit.	At least every 4 hours*	5 NTU Contact state within 24 hours	1 NTU Contact state within 24 hours	1 NTU Contact state within 24 hours
IFE Monitoring Report IFE monitoring conducted and any follow-up actions.	Monitor continuously every 15 minutes	None	Monitor–exceedances require follow-up action	Monitor–exceedances require follow-up action. Systems with 2 or fewer filters may monitor CFE continuously in lieu of IFE.

*Monitoring frequency may be reduced by the state to once per day for systems serving 500 or fewer people.

IFE Follow-Up and Reporting Requirements

	IESWTR (≥ 10,000)			**LT1ESWTR (< 10,000) ****		
Condition	**Action**	**Report**	**By**	**Action**	**Report**	**By**
2 consecutive recordings >0.5 NTU taken 15 minutes apart at the end of the first 4 hours of continuous filter operation after backwash/offline:	Produce filter profile within 7 days (if cause not known)	▸ Filter # ▸ Turbidity value ▸ Date ▸ Cause (if known) or report profile was produced	10th of the following month			
2 consecutive recordings > 1.0 NTU taken 15 minutes apart:	Produce filter profile within 7 days (if cause not known)	▸ Filter # ▸ Turbidity value ▸ Date ▸ Cause (if known) or report profile was produced	10th of the following month		▸ Filter # ▸ Turbidity value ▸ Date ▸ Cause (if known)	10th of the following month
2 consecutive recordings > 1.0 NTU taken 15 minutes apart at the same filter for **3 months in a row**:	Conduct filter self-assessment within 14 days	▸ Filter # ▸ Turbidity value ▸ Date ▸ Report filter self-assessment produced	10th of the following month	Conduct a filter self-assessment within 14 days. Systems with 2 filters that monitor CFE in lieu of IFE must do both filters.	▸ Date filter self-assessment triggered & completed	10th of the following month (or within 14 days of filter self-assessment being triggered if triggered in last 4 days of the month)
2 consecutive recordings > 2.0 NTU taken 15 minutes apart at the same filter for 2 months in a row:	Arrange for CPE within 30 days & submit report within 90 days	▸ Filter # ▸ Turbidity value ▸ Date	10th of the following month	Arrange for CPE within 60 days & submit CPE report within 120 days	▸ Date CPE triggered	10th of the following month
		Submit CPE report	90 days after exceedance		Submit CPE report	120 days after exceedance

** Systems serving fewer than 10,000 people must begin complying with these requirements beginning January 1, 2005.

IFE performance is measured in systems using conventional or direct filtration. The performance of each individual filter is critical to controlling pathogen breakthrough. The **CFE** turbidity results may mask the performance of an individual filter since the individual filter may have a turbidity spike of a short duration not detected by 4 hour CFE readings.

The IESWTR and LT1ESWTR created more stringent CFE turbidity standards and established a new IFE turbidity monitoring requirement to address *Cryptosporidium*. These new turbidity standards assure conventional and direct filtration systems will be able to provide 2-log *Cryptosporidium* removal.

Disinfection

Disinfection must be sufficient to ensure that the total treatment process (disinfection plus filtration) of the system achieves at least:

- 99.9% (3-log) inactivation and/or removal of *Giardia lamblia*.
- 99.99% (4-log) inactivation and/or removal of viruses.

Cryptosporidium must be removed by filtration and no inactivation credits are currently given for disinfection. Systems must also comply with the maximum residual disinfectant level (MRDL) requirements specified in the Stage 1 Disinfectants/ Disinfection Byproducts Rule (Stage 1 DBPR).

Residual Disinfectant Monitoring and Reporting Requirements

Location	Concentration	Monitoring Frequency	Reporting (Reports due 10th of the following month)
Entry to distribution system.	Residual disinfectant concentration cannot be < 0.2 mg/L for more than 4 hours.	Continuous, but states may allow systems serving 3,300 or fewer persons to take grab samples from 1 to 4 times per day, depending on system size.	Lowest daily value for each day, the date and duration when residual disinfectant was < 0.2 mg/L, and when state was notified of events where residual disinfectant was < 0.2 mg/L.
Distribution system - same location as total coliform sample location(s).	Residual disinfectant concentration cannot be undetectable in greater than 5% of samples in a month, for any 2 consecutive months. Heterotrophic plate count (HPC) ≤ 500/mL is deemed to have detectable residual disinfectant.	Same time as total coliform samples.	Number of residual disinfectant or HPC measurements taken in the month resulting in no more than 5% of the measurements as being undetectable in any 2 consecutive months.

Disinfection Profiling and Benchmarking Requirements

A **disinfection profile** is the graphical representation of a system's microbial inactivation over 12 consecutive months.

A **disinfection benchmark** is the lowest monthly average microbial inactivation value. The disinfection benchmark is used as a baseline of inactivation when considering changes in the disinfection process.

Disinfection Profiling and Benchmarking Requirements Under IESWTR & LT1ESWTR

The purpose of disinfection profiling and benchmarking is to allow systems and states to assess whether a change in disinfection practices creates a microbial risk. Systems should develop a disinfection profile that reflects *Giardia lamblia* inactivation (systems using ozone or chloramines must also calculate inactivation of viruses), calculate a benchmark (lowest monthly inactivation) based on the profile, and consult with the state prior to making a significant change to disinfection practices.

REQUIREMENT	IESWTR	LT1ESWTR
AFFECTED SYSTEMS:	Community, non-transient non-community, and transient systems.	Community and non-transient non-community systems only.
BEGIN PROFILING BY:	April 1, 2000	▸ July 1, 2003 for systems serving 500-9,999 people. ▸ January 1, 2004 for systems serving fewer than 500 people.
FREQUENCY & DURATION:	**Daily** monitoring for 12 consecutive calendar months to determine the total logs of *Giardia lamblia* inactivation (and viruses, if necessary) for each day in operation.	**Weekly** inactivation of *Giardia lamblia* (and viruses, if necessary), on the same calendar day each week over 12 consecutive months.
STATES MAY WAIVE DISINFECTION PROFILING REQUIREMENTS IF:	TTHM annual average <0.064 mg/L and HAA5 annual average <0.048 mg/L: ▸ Collected during the same period. ▸ Annual average is arithmetic average of the quarterly averages of four consecutive quarters of monitoring. ▸ At least 25% of samples at the maximum residence time in the distribution system. ▸ Remaining 75% of samples at representative locations in the distribution system.	One TTHM sample <0.064 mg/L and one HAA5 sample <0.048 mg/L: ▸ Collected during the month of warmest water temperature; **AND** ▸ At the maximum residence time in the distribution system. Samples must have been collected after January 1, 1998.
DISINFECTION BENCHMARK MUST BE CALCULATED IF:	Systems required to develop a disinfection profile and are considering any of the following: ▸ Changes to the point of disinfection. ▸ Changes to the disinfectant(s) used. ▸ Changes to the disinfection process. ▸ Any other modification identified by the state. Systems must consult the state prior to making any modifications to disinfection practices.	Same as IESWTR, and systems must obtain state approval prior to making any modifications to disinfection practices.

Filter Backwash Recycling Rule

The FBRR applies to PWSs that use surface water or ground water under the direct influence of surface water, practice conventional or direct filtration, and recycle spent filter backwash, thickener supernatant, or liquids from dewatering processes. The FBRR requires systems that recycle to return specific recycle flows through all processes of the system's existing conventional or direct filtration system or at an alternate location approved by the state. The FBRR was developed to improve public health protection by assessing and changing, where needed, recycle practices for improved contaminant control, particularly microbial contaminants. Systems were required to submit recycle notification to the state by December 8, 2003.

Filter Backwash Critical Deadlines and Requirements

June 8, 2004	▸ Return recycle flows through the processes of a system's existing conventional or direct filtration system or an alternate recycle location approved by the state (a 2-year extension is available for systems making capital improvements to modify the recycle return location). ▸ Collect recycle flow information and retain on file.
June 8, 2006	Complete all capital improvements associated with relocating recycle return location (if necessary).

SWTR FACT SHEET - **EPA Region 8** – July 2016

Requirements for Filtered Public Water Systems under the following regulations:

Surface Water Treatment Rule (SWTR) - 40 CFR Part 141, Subpart H

Filter Backwash Recycling Rule (Recycle provisions within Subpart H)

Interim Enhanced SWTR (IESWTR) - 40 CFR Part 141, Subpart P

Long Term 1 Enhanced SWTR (LT1ESWTR) - 40 CFR Part 141, Subpart T

Long Term 2 Enhanced SWTR (LT2) – 40 CFR Part 141, Subpart W

GENERAL INFORMATION

The following requirements apply to Subpart H systems (those using a **surface water source, or those that have been notified by EPA Region 8 that they are using a source determined to be Groundwater Under the Direct Influence of Surface Water (GWUDISW)).** EPA may designate a groundwater system as GWUDISW at any date, based upon new information. At that point, EPA will notify the system when the requirements outlined in this Fact Sheet begin (typically within 18 months of the GWUDISW determination).

The original SWTR of 1989 addressed the pathogens *Giardia lamblia* and viruses. The SWTR was later modified with additional requirements to address *Cryptosporidium*, through the **Interim Enhanced SWTR (IESWTR) for systems serving at least 10,000 people**, and the **Long Term 1 Enhanced SWTR (LT1ESWTR) for systems serving less than 10,000 people**. The main compliance dates for the new treatment technique requirements of the IESWTR and LT1ESWTR were January 1, 2002 and January 1, 2005, respectively.

The LT2 Enhanced Treatment for *Cryptosporidium* regulation was finalized in 2006. It applies to ALL Subpart H systems. This rule requires an initial and second round of source water monitoring for each plant that treats a SW or GWUDISW source. Based upon the monitoring results, additional treatment for *Cryptosporidium* may be required. The Subpart H, P, and T requirements discussed in this Fact Sheet remain in effect with the LT2 rule. **For additional information on LT2, please contact EPA Region 8.**

The following information in this Fact Sheet deals with the ongoing requirements of these rules for systems that filter: operating personnel, treatment technique requirements, monitoring and test methods, equipment calibration, public notice, and reporting. Note that there are additional, specific requirements in the SWTRs (such as for unfiltered systems meeting avoidance criteria, for disinfection profiling, and for recordkeeping of backwash recycle rates). Please refer to the specific rules for these requirements, or contact EPA Region 8 with questions.

PERSONNEL

Qualified operators Every public water system using a surface water or GWUDISW must be operated by a qualified operator.

Wyoming Public Water Systems: EPA Region 8 considers an operator qualified if they are certified according to Wyoming Department of Environmental Quality (WDEQ) requirements. Contact the WDEQ at (307) 777-7594 or 777-6128 or email opcert@wyo.gov for operator certification requirements and procedures.

Tribal Public Water Systems: EPA Region 8 considers an operator qualified if they are certified at the appropriate level under an approved program operated by one of the states in Region 8 or through the EPA National Operator Certification Program.

Approved parties On-site measurements of certain water quality parameters (e.g. turbidity, pH, disinfectant residual, temperature) may be made by an approved party; this is someone under the supervision of a certified operator, who has been adequately trained to use the equipment needed for testing.

TREATMENT TECHNIQUES

Objectives At least 99.9% (3-log) removal and/or inactivation of *Giardia lamblia* cysts

AND

At least 99.99% (4-log) removal and/or inactivation of viruses.

The above treatment objectives can be met by combining filtration and inactivation (disinfection) barriers. You can add up the logs achieved from each barrier to get the total treatment for that micro-organism

AND

At least 99% (2-log) removal of *Cryptosporidium*

Note that for Cryptosporidium, the IESWTR and LT1ESWTR require that 2-log removal be achieved by the filters; inactivation of Cryptosporidium is not credited for compliance with these two rules. Additional removal and/or inactivation of *Cryptosporidium* based on LT2ESWTR monitoring results or commitment to install maximum treatment may apply. Exact level of additional treatment required is system specific.

Treatment Credit Well operated/maintained filtration is granted removal credit for *Giardia lamblia*, viruses, and *Cryptosporidium*.

Inactivation (disinfection) credit can be determined by CT (concentration x time) values (or IT (intensity x time) values for ultraviolet radiation (UV)).

CT is calculated by multiplying C (the concentration of free chlorine or other disinfectant in mg/L) by T (the disinfection contact time in minutes, at or before the first service connection.)
Calculate CT based on your specific treatment parameters.

Adequate CT should be maintained daily to consistently meet the treatment technique requirements, although EPA does not require filtered water systems to provide daily calculations. A calculator spreadsheet for daily or weekly calculations of inactivation for *Giardia* and virusus can be provided upon request. UV dose values for logs inactivation by ultraviolet radiation (UV) are found in the LT2ESWTR at 40 CFR 141.720(d).

Filtration Removal Credit

Please see EPA Region 8 policy SWTR #2 revised May 17, 2004 for a discussion of the various types of filtration which are acceptable for SWTR compliance, and the associated microbial pathogen removal credits associated with each type of filtration. This information is summarized in Table 1, taken from policy SWTR #2, which indicates for each filtration type the expected log removal credits for *Cryptosporidium*, *Giardia* and viruses, and the necessary remaining disinfection (inactivation) credits to achieve the treatment technique requirements. These removal credits are based upon filtration systems meeting the operational and design requirements specified in policy SWTR #2, and consistently meeting the specified, combined filter effluent (CFE) and individual filter effluent (IFE) turbidity requirements.

Note that for *Cryptosporidium*, the IESWTR and LT1ESWTR require that 2-log removal be achieved by the filters; inactivation of *Cryptosporidium* is not credited for compliance with those rules.

Table 1

FILTRATION CREDITS FOR MICROBIAL REMOVAL, TO MEET SWTR, IESWTR and LT1ESWTR**

(systems consistently meeting the CFE turbidity limits in the table below, and the operational and design requirements outlined in policy SWTR #2, are granted the Logs removal credit in the table below.)

FILTRATION TREATMENT TECHNOLOGY	COMBINED FILTER EFFLUENT (CFE) TURBIDITY (95% MNTHLY/MAX) ntu	MAXIMUM LOGS OF CREDIT FOR PHYSICAL REMOVAL			MINIMUM LOGS OF INACTIVATION NEEDED BY DISINFECTION	
		Cryptosporidium	*Giardia*	Viruses	*Giardia*	Viruses
Conventional	*** 0.3/1	>2	2.5	2.0	0.5	2.0
Direct	***0.3/1	>2	2.0	1.0	1.0	3.0
Slow Sand	1/5	>2	2.0	2.0	1.0	2.0
Diatomaceous Earth	1/5	>2	2.0	1.0	1.0	3.0
Reverse Osmosis	0.3/1	>2	>3.0	3.0	0	1.0
Nanofiltration	0.3/1	>2	>3.0	3.0	0	1.0
Ultrafiltration	0.3/1	>2	>3.0	0	0	4.0
Microfiltration	0.3/1	>2	>3.0	0	0	4.0
Pretreatment plus Bag or Cartridge (B/C) *	1/5	2	2.0	0	1.0	4.0
Conventional Filtration followed by (B/C)	0.5/5	2	2.5	2.0	0.5	2.0

*** See policy for description of adequate pretreatment for SW and for GWUDISW using B/C Filtration**

**** Additional types of alternative filtration should be evaluated on a case-specific basis. 95th percentile and maximum turbidity values will be no more than 1 NTU and 5 NTU, respectively, for all alternative filtration technologies, unless different site specific values are assigned. All NTU rounding shall be in accordance with EPA established policy. Also, these filtration credits do not apply to point-of-use devices, which are not compliant with the SWTRs.**

***** Conventional, direct, and membrane filtration also have requirements for monitoring of individual filter effluent turbidity (IFE). See IESWTR and LT1ESWTR.**

MONITORING REQUIREMENTS

Monthly reporting is required under the SWTRs. These reports and instructions can be found at https://www.epa.gov/region8-waterops/reporting-forms-and-instructions-reporting-forms. Please note that the report you should use depends upon your type of filtration and population served.

Public Notice requirements for the violations discussed in each section below may be found at: https://www.epa.gov/region8-waterops/reporting-forms-and-instructions-public-notification.

(I) Turbidity - REPORT TO EPA IN MONTHLY REPORT

Continuous monitoring of effluent from individual filters (IFE) is required for systems using **conventional or direct filtration, as well as individual membrane units**. Monitoring of the **combined effluent from all filters (CFE) is required for every regulated filtered system.** The CFE turbidimeter must be sited at a sampling location which is representative of the filtered water. The CFE turbidity is most representative of filtered water turbidity in the pipe where the individual filter effluents first combine, or near a clearwell inlet. Measuring turbidity at locations further downstream (after pumping operations or after storage tanks) may result in inaccurate readings due to air entrainment, particle resuspension, etc. For a further discussion on appropriate turbidimeter locations, please see EPA Region 8 policy SWTR #5, dated June 30, 2003.

The turbidity limits depend upon the type of filtration:

Conventional and direct filtration:

- The turbidity level of representative samples of CFE must be less than or equal to 0.3 NTU in at least 95% of the measurements taken each month.

- The maximum level of turbidity of the CFE must not exceed 1 NTU at any time.

Since CFE may meet the regulatory requirements even though one filter is producing high turbidity water, the IFE must also be measured to help the operators assess individual filter performance. IFE turbidity must be monitored continuously and recorded at least every 15 minutes. **This IFE turbidity data is kept on-site**, only summarized results and corrective actions are reported monthly to EPA. If you have two or fewer filters, you can conduct the continuous monitoring of the CFE instead. Certain follow-up actions are required if the IFE turbidity (or CFE turbidity if you have 2 filters) exceeds certain levels, typically 0.5 NTU. These followup actions can include additional reporting, filter profiles or self-assessments, and/or comprehensive performance evaluations. **If you use conventional or direct filtration, PLEASE review the regulations for these specific requirements**.

Slow sand and diatomaceous earth (DE) filtration:

- The turbidity level of representative samples of CFE must be less than or equal to 1 NTU in at least 95% of the measurements taken each month.

- The maximum level of turbidity of the CFE must not exceed 5 NTU.

Alternative technologies (other than conventional, direct, slow sand or DE):

- Operational and design requirements for alternative filtration are discussed in EPA Region 8 policy memo SWTR #2. In general, the water system must demonstrate that the filtration combined with disinfection consistently meets the treatment technique requirements; specific turbidity limits for maintaining this performance may be set from performance demonstration data. The turbidity limits for alternative filtration are also shown in Table 1. For membrane technologies, the turbidity level of representative samples of CFE must be less than or equal to 0.3 NTU in at least 95% of the measurements taken each month; for bag or cartridge (B/C) filtration this limit is 1 NTU. Membrane systems must continuously monitor filtrate turbidity from each unit/skid, and record the values once/15 minutes. Membranes also have requirements for Direct Integrity testing of each unit.

- The maximum level of turbidity of the CFE must not exceed 1 NTU for membrane filtration and 5 NTU for B/C filtration.

The frequency of CFE turbidity monitoring depends on the system size and type of filtration:

All Systems

Turbidity must be monitored on representative samples of the CFE every 4 hours that the system serves water to the public.

A public water system can substitute continuous CFE turbidity monitoring for 4-hour grab samples. You must record the current CFE turbidity value at equal intervals of 4 hours. Averaging of 4 hours of data, or monitoring at any other intervals longer than 4 hours, is not permitted, except as discussed below.

Systems serving populations < 500

If approved by EPA, they have the option of reducing CFE turbidity monitoring frequency to one per day regardless of the type of treatment.

Systems using acrylamide or epichlorohydrin

Must provide annual written certification (third party or manufacturer's certification) to EPA. The combination/product of dose and monomer level dose cannot exceed the following levels:
Acrylamide = 0.05% dosed at 1 ppm, or equivalent
Epichlorohydrin = 0.01% dosed at 20 ppm, or equivalent

What you must know about violations

A treatment technique violation results when a system cannot meet the turbidity criteria outlined above. Public notice is required; the type of notification depends upon the type of treatment technique violation:

If at any time the CFE turbidity exceeds 5 NTU (or 1 NTU for conventional or direct filtration, or membrane systems, pursuant to the IESWTR or LT1ESWTR), the system must inform EPA within 24 hours after learning of the violation. EPA will consult with the system to determine if Tier 1 (24 hour) public notice is needed; Tier 1 is mandatory if the system does not consult with EPA within 24 hours. Also, if it appears that a waterborne disease outbreak has occurred resulting from the water system, EPA must be notified as soon as possible, but no later than by the end of the next business day. In this case, Tier 1 public notice is required.

For other turbidity treatment technique violations, Tier 2 (30 day) public notice is needed. For monitoring and testing procedure violations, Tier 3 (within 1 year) public notice is required.

(II) Disinfection - - REPORT TO EPA IN MONTHLY REPORT

Disinfectant levels must be measured at BOTH (i) the entry point to the distribution system and (ii) within the distribution system.

(i) AT THE ENTRY POINT TO THE DISTRIBUTION SYSTEM

Concentration

The disinfectant residual concentration at the point of entry (POE) cannot be less than 0.2 mg/L (measured as free chlorine residual) for more than 4 hours.

The concentration and contact time must be adequate to ensure sufficient CT to achieve the necessary logs of inactivation (see Table 1)

Disinfectant concentration must be monitored continuously and the lowest value be recorded every day the system serves water to the public. Grab sampling may be conducted every 4 hours in lieu of continuous monitoring if the equipment fails, but

for no more than 5 working days following the failure.

If your system serves less than 3,300 population

You have the option of monitoring the residual disinfectant concentration at the POE by grab sampling at the following frequency:

Population Served	*Number of Samples to Collect/Day
<500	1
501 to 1,000	2
1,001 to 2,500	3
2,501 to 3,300	4

* the daily grab samples cannot be taken all at the same time; they must be collected at equal intervals throughout the day. Report the lowest value every day the system serves water to the public.

If at any time the residual concentration falls below 0.2 mg/L

You must take a grab sample every 4 hours until the residual concentration is equal to or greater than 0.2 mg/L.

What you must know about violations

A treatment technique violation results when a system cannot meet the disinfectant criteria outlined above. Public notice is required; the type of notification depends upon the type of treatment technique violation:

For disinfection treatment technique violations, Tier 2 (30 day) public notice is needed. For disinfectant monitoring and testing procedure violations, Tier 3 (within 1 year) public notice is required.

If at any time the residual falls below 0.2 mg/L in the water entering the distribution system, the system must notify EPA as soon as possible, but no later than by the end of the next business day. The system must also notify EPA by the end of the next business day whether or not the residual was restored to at least 0.2 mg/L within 4 hours.

(ii) IN THE DISTRIBUTION SYSTEM

Disinfectant residual must be monitored at the same frequency and at the same point(s) as where total coliforms are sampled per the Total Coliform Rule. Write your residual value on the lab slip!

Heterotrophic plate count (HPC) measured in the distribution system can be

conducted in lieu of this monitoring, for those systems which cannot maintain disinfectant residual in the distribution pipes.

Concentration

The residual disinfectant concentration in the distribution system cannot be undetectable, or have an HPC of more than 500/mL, in more than 5% of the samples in one month, for 2 consecutive months. The disinfectant levels in the distribution system should ensure compliance with the Maximum Residual Disinfectant Level (MRDL) of 4 mg/L.

What you must know about violations

A treatment technique violation results when a system cannot meet the disinfectant criteria outlined above. Public notice is required; the type of notification depends upon the type of treatment technique violation:

For disinfection treatment technique violations, Tier 2 (30 day) public notice is needed. For disinfectant monitoring and testing procedure violations, Tier 3 (within 1 year) public notice is required.

REPORTING

The daily data log sheets and daily or weekly contact time (CT) calculations must be kept on file for at least 5 years. Results of IFE turbidity monitoring must be kept for at least 3 years, and results of disinfection profiling and benchmarking must be kept indefinitely.

The Monthly SWTR reports must be submitted to the EPA Region 8 office. The monthly report is due no later than the 10th day of the month following the month in which the data are obtained. **These reports and instructions can be found at:** https://www.epa.gov/region8-waterops/reporting-forms-and-instructions-reporting-forms.

Please note that the report you should use depends upon your type of filtration and population served. They can be submitted by email to: crosby.jake@epa.gov.

If you have any more questions, or need further assistance, please contact EPA Region 8 at 1-800-227-8917 x 6389.

MONITORING EQUIPMENT CALIBRATION

Turbidimeters must be calibrated using procedures specified by the manufacturer (typically at least quarterly using a primary standard.) Records should be kept of calibrations, and the date of last calibration reported on the monthly SWTR reports.

Chlorine analyzers – continuous (online) analyzers must be calibrated weekly (once every 7 days) with grab samples; see EPA Method 334.0 (see next section)

MONITORING TEST METHODS

For the most recent test methods for the SWTRs, please refer to the following website, and go to the link for the Enhanced Surface Water Treatment Rule:

https://www.epa.gov/dwanalyticalmethods

Compliance monitoring test methods are listed by analyte (e.g. turbidity, free chlorine).

United States Environmental Protection Agency
Office of Water (4606)
EPA 816-F-01-011
May 2001
www.epa.gov/safewater

Interim Enhanced Surface Water Treatment Rule: A Quick Reference Guide

Overview of the Rule

Title	Interim Enhanced Surface Water Treatment Rule (IESWTR) 63 FR 69478 - 69521, December 16, 1998, Vol. 63, No. 241 Revisions to the Interim Enhanced Surface Water Treatment Rule (IESWTR), the Stage 1 Disinfectants and Disinfection Byproducts Rule (Stage 1 DBPR), and Revisions to State Primacy Requirements to Implement the Safe Drinking Water Act (SDWA) Amendments 66 FR 3770, January 16, 2001, Vol 66, No. 29
Purpose	Improve public health control of microbial contaminants, particularly *Cryptosporidium*. Prevent significant increases in microbial risk that might otherwise occur when systems implement the Stage 1 Disinfectants and Disinfection Byproducts Rule.
General Description	Builds upon treatment technique approach and requirements of the 1989 Surface Water Treatment Rule. Relies on existing technologies currently in use at water treatment plants.
Utilities Covered	Sanitary survey requirements apply to all public water systems using surface water or ground water under the direct influence of surface water, regardless of size. All remaining requirements apply to public water systems that use surface water or ground water under the direct influence of surface water and serve 10,000 or more people.

Major Provisions

Regulated Contaminants

Cryptosporidium	▸ Maximum contaminant level goal (MCLG) of zero. ▸ 99 percent (2-log) physical removal for systems that filter. ▸ Include in watershed control program for unfiltered systems.
Turbidity Performance Standards	Conventional and direct filtration combined filter effluent: ▸ ≤ 0.3 nephelometric turbidity units (NTU) in at least 95 percent of measurements taken each month. ▸ Maximum level of 1 NTU.

Turbidity Monitoring Requirements (Conventional and Direct Filtration)

Combined Filter Effluent	▸ Performed every 4 hours to ensure compliance with turbidity performance standards.
Individual Filter Effluent	▸ Performed continuously (every 15 minutes) to assist treatment plant operators in understanding and assessing filter performance.

Additional Requirements

- Disinfection profiling and benchmarking.
- Construction of new uncovered finished water storage facilities prohibited.
- Sanitary surveys, conducted by the state, for all surface water and ground water under the direct influence of surface water systems regardless of size (every 3 years for community water systems and every 5 years for noncommunity water systems).

For additional information on the IESWTR

Call the Safe Drinking Water Hotline at 1-800-426-4791; visit the EPA web site at www.epa.gov/safewater; or contact your State drinking water representative.

Additional material is available at www.epa.gov/safewater/mdbp/implement.html.

Profiling and Benchmarking

Public water systems must evaluate impacts on microbial risk before changing disinfection practices to ensure adequate protection is maintained. The three major steps are:

- **Determine if a public water system needs to profile based on TTHM and HAA5 levels (applicability monitoring)**
- **Develop a disinfection profile that reflects daily *Giardia lamblia* inactivation for at least a year (systems using ozone or chloramines must also calculate inactivation of viruses)**
- **Calculate a disinfection benchmark (lowest monthly inactivation) based on the profile and consult with the state prior to making a significant change to disinfection practices**

Critical Deadlines and Requirements

For Drinking Water Systems

February 16, 1999	Construction of uncovered finished water reservoirs is prohibited.
March 1999	Public water systems lacking ICR or other occurrence data begin 4 quarters of applicability monitoring for TTHM and HAA5 to determine if disinfection profiling is necessary.
April 16, 1999	Systems that have 4 consecutive quarters of HAA5 occurrence data that meet the TTHM monitoring requirements must submit data to the state to determine if disinfection profiling is necessary.
December 31, 1999	Public water systems with ICR data must submit it to states to determine if disinfection profiling is necessary.
April 1, 2000	Public water systems must begin developing a disinfection profile if their annual average (based on 4 quarters of data) for TTHM is greater than or equal to 0.064 mg/L or HAA5 is greater than or equal to 0.048 mg/L.
March 31, 2001	Disinfection profile must be complete.
January 1, 2002	Surface water systems or ground water under the direct influence of surface water systems serving 10,000 or more people must comply with all IESWTR provisions (e.g., turbidity standards, individual filter monitoring).

For States

December 16, 2000	States submit IESWTR primacy revision applications to EPA (triggers interim primacy).
January 2002	States begin first round of sanitary surveys.
December 16, 2002	Primacy extension deadline - all states with an extension must submit primacy revision applications to EPA.
December 2004	States must complete first round of sanitary surveys for community water systems.
December 2006	States must complete first round of sanitary surveys for noncommunity water systems.

Public Health Benefits

Implementation of the IESWTR will result in . . .	▸ Increased protection against gastrointestinal illnesses from *Cryptosporidium* and other pathogens through improvements in filtration. ▸ Reduced likelihood of endemic illness from *Cryptosporidium* by 110,000 to 463,000 cases annually. ▸ Reduced likelihood of outbreaks of cryptosporidiosis.
Estimated impacts of the IESWTR include . . .	▸ National total annualized cost: $307 million ▸ 92 percent of households will incur an increase of less than $1 per month. ▸ Less than 1 percent of households will incur an increase of more than $5 per month (about $8 per month).

EPA
United States
Environmental Protection
Agency

Long Term 1 Enhanced Surface Water Treatment Rule: A Quick Reference Guide

Overview of the Rule

Title	Long Term 1 Enhanced Surface Water Treatment Rule (LT1ESWTR) 67 FR 1812, January 14, 2002, Vol. 67, No. 9
Purpose	Improve public health protection through the control of microbial contaminants, particularly *Cryptosporidium*. Prevent significant increases in microbial risk that might otherwise occur when systems implement the Stage 1 Disinfectants and Disinfection Byproducts Rule.
General Description	Builds upon the requirements of the 1989 Surface Water Treatment Rule (SWTR). Smaller system counterpart of the Interim Enhanced Surface Water Treatment Rule (IESWTR).
Utilities Covered	Public water systems that use surface water or ground water under the direct influence of surface water (GWUDI) and serve fewer than 10,000 people.

Major Provisions

Control of *Cryptosporidium*

- The maximum contaminant level goal (MCLG) is set at zero.
- Filtered systems must physically remove 99% (2-log) of *Cryptosporidium*.
- Unfiltered systems must update their watershed control programs to minimize the potential for contamination by *Cryptosporidium* oocysts.
- *Cryptosporidium* is included as an indicator of GWUDI.

Combined Filter Effluent (CFE) Turbidity Performance Standards

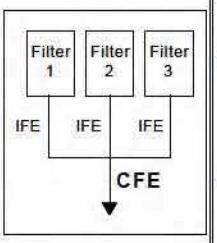

Specific CFE turbidity requirements depend on the type of filtration used by the system.

Conventional and direct filtration:

- ≤ 0.3 nephelometric turbidity units (NTU) in at least 95% of measurements taken each month.
- Maximum level of turbidity: 1 NTU.

Slow sand and diatomaceous earth (DE) filtration:

- Continue to meet CFE turbidity limits specified in the SWTR:
  - 1 NTU in at least 95% of measurements taken each month.
  - Maximum level of turbidity: 5 NTU.

Alternative technologies (other than conventional, direct, slow sand, or DE):

- Turbidity levels are established by the State based on filter demonstration data submitted by the system.
  - State-set limits must not exceed 1 NTU (in at least 95% of measurements) or 5 NTU (maximum).

Turbidity Monitoring Requirements

Combined Filter Effluent	▸ Performed at least every 4 hours to ensure compliance with CFE turbidity performance standards.[1]
Individual Filter Effluent (IFE) (for systems using conventional and direct filtration only)	***Since the CFE may meet regulatory requirements even though one filter is producing high turbidity water, the IFE is measured to assist conventional and direct filtration treatment plant operators in understanding and assessing individual filter performance.*** ▸ Performed continuously (recorded at least every 15 minutes). ▸ Systems with two or fewer filters may conduct continuous monitoring of CFE turbidity in place of individual filter effluent turbidity monitoring. ▸ Certain follow-up actions are required if the IFE turbidity (or CFE for systems with two filters) exceeds 1.0 NTU in 2 consecutive readings or more (i.e., additional reporting, filter self-assessments, and/or comprehensive performance evaluations (CPEs)).

For additional information on the LT1ESWTR

Call the Safe Drinking Water Hotline at 1-800-426-4791; visit the EPA web site at www.epa.gov/safewater/mdbp/lt1eswtr.html; or contact your State drinking water representative.

[1] This frequency may be reduced by the State to once per day for systems using slow sand/alternative filtration or for systems serving 500 persons or fewer regardless of the type of filtration used.

Disinfection Profiling and Benchmarking Requirements

Community and non-transient non-community public water systems must evaluate impacts on microbial risk before changing disinfection practices to ensure adequate microbial protection is maintained. This is accomplished through a process called disinfection profiling and benchmarking.

What are the disinfection profiling and benchmarking requirements?

- **Systems must develop a disinfection profile, which is a graphical compilation of weekly inactivation of *Giardia lamblia*, taken on the same calendar day each week over 12 consecutive months. (Systems using chloramines, ozone, or chlorine dioxide for primary disinfection must also calculate inactivation of viruses). Results must be available for review by the State during sanitary surveys.**
- **A State may deem a profile unnecessary if the system has sample data collected after January 1, 1998–during the month of warmest water temperature and at maximum residence time in the distribution system–indicating TTHM levels are below 0.064 mg/L and HAA5 levels are below 0.048 mg/L.**
- **Prior to making a significant change to disinfection practices, systems required to develop a profile must calculate a disinfection benchmark and consult with the State. The benchmark is the calculation of the lowest monthly average of inactivation based on the disinfection profile.**

Additional Requirements

- **Construction of new uncovered finished water reservoirs is prohibited.**

Critical Deadlines and Requirements

For Drinking Water Systems

March 15, 2002	**Construction of uncovered finished reservoirs is prohibited.**
July 1, 2003	**No later than this date, systems serving between 500-9,999 persons must report to the State:** **▸ Results of optional monitoring which show levels of TTHM < 0.064 mg/L and HAA5 < 0.048 mg/L, OR** **▸ System has started profiling.**
January 1, 2004	**No later than this date, systems serving fewer than 500 persons must report to the State:** **▸ Results of optional monitoring which show levels of TTHM < 0.064 mg/L and HAA5 < 0.048 mg/L, OR** **▸ System has started profiling.**
June 30, 2004	**Systems serving between 500 and 9,999 persons must complete their disinfection profile unless the State has determined it is unnecessary.**
December 31, 2004	**Systems serving fewer than 500 persons must complete their disinfection profile unless the State has determined it is unnecessary.**
January 14, 2005	**Surface water systems or GWUDI systems serving fewer than 10,000 people must comply with the applicable LT1ESWTR provisions (e.g., turbidity standards, individual filter monitoring, *Cryptosporidium* removal requirements, updated watershed control requirements for unfiltered systems).**

For States

January 2002	**As per the IESWTR, States begin first round of sanitary surveys (at least every 3 years for community water systems and every 5 years for non-community water systems).**
October 14, 2003	**States are encouraged to submit final primacy applications to EPA.**
January 14, 2004	**Final primacy applications must be submitted to EPA unless granted an extension.**
December 2004	**States must complete first round of sanitary surveys for community water systems (as per the IESWTR).**
January 14, 2006	**Final primacy revision applications from States with approved 2-year extension agreements must be submitted to EPA.**
December 2006	**States must complete first round of sanitary surveys for non-community water systems (as per the IESWTR).**

Public Health Benefits

Implementation of the LT1ESWTR will result in . . .	**▸ Increased protection against gastrointestinal illnesses from *Cryptosporidium* and other pathogens through improvements in filtration.** **▸ Reduced likelihood of endemic illness from *Cryptosporidium* by an estimated 12,000 to 41,000 cases annually.** **▸ Reduced likelihood of outbreaks of cryptosporidiosis.**
Estimated impacts of the LT1ESWTR include . . .	**▸ National total annualized cost: $39.5 million.** **▸ 90% of affected households will incur an increase of less than $1.25 per month.** **▸ One percent of affected households are likely to incur an increase of more than $10 per month.**

LT2ESWTR Source Water Monitoring for Systems Serving Less Than 10,000 People Factsheet

What Is The LT2ESWTR?

The U.S. Environmental Protection Agency (EPA) published the Long Term 2 Enhanced Surface Water Treatment Rule (LT2ESWTR) on January 5, 2006. The LT2ESWTR improves control of microbial pathogens. The LT2ESWTR requires source water monitoring at public water systems (PWSs) that use surface water or ground water under the direct influence of surface water (GWUDI) (i.e., Subpart H PWSs). Based on system size and filtration type, systems need to monitor for *Cryptosporidium*, *E. coli*, and turbidity. This factsheet is for systems that serve less than 10,000 people. **Note, if you sell water to a system that serves greater than 10,000 people or are part of a combined distribution system and one of the consecutive systems has a population greater than 10,000 people, please refer to the *LT2ESWTR Source Water Monitoring for Systems Serving At Least 10,000 People Factsheet* (EPA 816-F-06-017).**

What Is The Purpose of Source Water Monitoring?

Source water monitoring data will be used to categorize the source water *Cryptosporidium* concentration in to one of four "bin" classifications that have associated treatment requirements. The LT2ESWTR provides other options for systems to comply with the **initial** source water monitoring requirements:

- Submit data from *Cryptosporidium* samples collected before the system must begin source water monitoring and the data must meets certain requirements.
- Filtered systems may skip source water monitoring and commit to provide a total of at least 5.5 log of treatment for *Cryptosporidium*, equivalent to meeting the treatment requirement of Bin 4. Unfiltered systems skip source water monitoring and commit to provide a total of at least 3-log *Cryptosporidium* inactivation, which is equal to meeting the treatment requirements for unfiltered systems with a mean *Cryptosporidium* concentration of greater than 0.01 oocysts/L. Systems that decide to skip monitoring and provide maximum treatment must notify the state in writing.

A **second round** of source water monitoring will follow 6 years after the system makes its initial bin determination. Grandfathering is not available for the second round of source water monitoring.

What Are The Initial Source Water Monitoring Requirements?

The source water monitoring requirements of LT2ESWTR apply to all Subpart H PWSs. You are subject to initial source water monitoring requirements if you do not have prior monitoring data that meets grandfathering requirements. For more information on source water monitoring requirements see EPA's *Source Water Monitoring Guidance Manual for Public Water Systems for the Final Long Term 2 Enhanced Surface Water Treatment Rule* (EPA 815-R06-005 February 2006), available at www.epa.gov/safewater/disinfection/lt2/compliance.html.

Two options systems serving less than 10,000 people have to comply with the source water monitoring requirements are:

- Conduct *E. coli* monitoring first and based on those results, the system may or may not need to conduct *Cryptosporidium* monitoring, or
- Systems may go directly to *Cryptosporidium* monitoring.

Prior to beginning initial source water monitoring, you must submit a sampling schedule that specifies the calendar dates when you will collect the required source water samples. The samples must be evenly spaced throughout the monitoring period (e.g., monthly on the 15th of each month). However, the schedule may be altered to take into account holidays, weekends, or other events. All the samples must be taken within a 5-day window (i.e., you can take the sample up to 2 days before or 2 days after the date indicated in the schedule). In addition, you

must submit a description of the intended sampling location in relation to the source and any treatment processes, as well as a description of any points of chemical addition, and filter backwash recycle.

FILTERED SYSTEMS SERVING LESS THAN 10,000 PEOPLE - You should collect *E. coli* samples at least once every 2 weeks for 12 months. You will then be required to monitor for *Cryptosporidium* at least twice per month for 12 months, or at least once per month for 24 months, if either of the following conditions are met:

- For systems using lakes or reservoirs, if the mean annual *E. coli* concentration is greater than 10 *E. coli*/100 mL. This also applies to GWUDI systems if the nearest surface water body is a lake or reservoir.
- For systems using flowing stream sources, if the mean annual *E. coli* concentration is greater than 50 *E. coli*/100 mL. This also applies to GWUDI systems if the nearest surface water body is a flowing stream, or if there is no nearby surface water.

A system may choose to notify EPA or the state it will not collect the *E. coli* samples, but you will collect *Cryptosporidium* samples at least twice per month for 12 months, or at least once per month for 24 months.

UNFILTERED SYSTEMS SERVING LESS THAN 10,000 PEOPLE - You must sample for *Cryptosporidium* at least twice per month for 12 months, or at least once per month for 24 months.

When Must I Comply With The Monitoring Requirements?

The system compliance schedule is based on the population served by your system. **A PWS must conduct monitoring based on the requirements of the largest system in the combined distribution system.** The interconnected wholesale/consecutive systems relationships have been determined by the state.

Systems that serve...	< 10,000 and monitor for *E. coli* [1]	< 10,000 and monitor for *Cryptosporidium* [2]
Submit: Sample Schedule and Sample Location Description	July 1, 2008	January 1, 2010
Must begin the first round of source water monitoring by...	October 2008	April 2010
Submit Grandfathered Data (if applicable)	December 1, 2008	June 1, 2010
Submit Bin Classification (Filtered) or Mean *Cryptosporidium* Level (Unfiltered)		September 2012
Comply with additional LT2ESWTR treatment technique requirements[3]		October 1, 2014
Must begin the second round of source water monitoring by...	October 1, 2017	April 1, 2019

[1] Applies only to filtered systems.

[2] Applies to filtered systems that exceed the *E. coli* trigger or do not monitor for *E. coli* and to unfiltered systems.

[3] State may allow up to an additional 2 years for capital improvements to comply with the treatment technique.

What Is A Bin Classification?

FILTERED SYSTEMS SERVING LESS THAN 10,000 PEOPLE - You will be classified into a "bin" based on the results of your source water monitoring. Your bin classification determines whether further treatment for *Cryptosporidium* is required. A second round of source water monitoring is required 6 years after your initial bin classification and may affect your bin classification.

For systems that are:	Mean *Cryptosporidium* Concentration[1]	Bin Classification
...required to monitor for *Cryptosporidium*	< 0.075 oocysts/L	Bin 1
	from 0.075 to < 1.0 oocysts/L	Bin 2
	from 1.0 to < 3.0 oocysts/L	Bin 3
	≥ 3.0 oocysts/L	Bin 4
... not required to monitor for *Cryptosporidium* [2]	N/A	Bin 1

[1] Samples must be analyzed by an approved laboratory and use EPA method 1622 or 1623.

[2] Only for systems that do not exceed the *E. coli* trigger level.

ADDITIONAL TREATMENT REQUIREMENTS FOR FILTERED SYSTEMS - Additional treatment may be required based on your bin classification. Refer to the table below for the additional *Cryptosporidium* treatment requirements.

Bin Classification	If the system uses the following filtration treatment in full compliance with existing requirements, then the additional *Cryptosporidium* treatment requirements are...			
	Conventional filtration treatment (including softening)	Direct filtration	Slow sand or diatomaceous earth filtration	Alternative filtration technologies
Bin 1	No additional treatment	No additional treatment	No additional treatment	No additional treatment
Bin 2	1-log treatment	1.5-log treatment	1-log treatment	(1)
Bin 3	2-log treatment	2.5-log treatment	2-log treatment	(2)
Bin 4	2.5-log treatment	3-log treatment	2.5-log treatment	(3)

(1) As determined by the state such that the total *Cryptosporidium* removal and inactivation is at least 4.0-log.

(2) As determined by the state such that the total *Cryptosporidium* removal and inactivation is at least 5.0-log.

(3) As determined by the state such that the total *Cryptosporidium* removal and inactivation is at least 5.5-log.

For information on the toolbox options that can be used to achieve additional log removal requirements, see the *Long Term 2 Enhanced Surface Water Treatment Rule Toolbox Guidance Manual* (draft version anticipated late 2006).

UNFILTERED SYSTEMS SERVING LESS THAN 10,000 PEOPLE - You must calculate an arithmetic mean of all *Cryptosporidium* samples concentrations required. Following completion of the second round of source water monitoring, you must provide a level of inactivation for *Cryptosporidium* based on the arithmetic mean of your *Cryptosporidium* sample concentrations.

For systems that are:	Mean *Cryptosporidium* Concentration[1]	*Cryptosporidium* inactivation
Unfiltered	≤ 0.01 oocysts/L	2-log
	> 0.01 oocysts/L	3-log

[1] Samples must be analyzed by an approved laboratory and use EPA method 1622 or 1623.

ARE YOU CONSIDERING MAKING A CHANGE TO YOUR DISINFECTION PRACTICES?

After completing the initial round of source water monitoring, systems that plan to make a significant change to their disinfection practice must notify the state, develop disinfection profiles, and calculate disinfection benchmarks for *Giardia lamblia* and viruses. To develop a profile and benchmark, PWSs must monitor at least weekly for a period of 12 consecutive months to determine the total log inactivation for *Giardia lamblia* and viruses. The disinfection benchmark is an indicator of disinfection effectiveness based on the inactivation of *Giardia lamblia* or viruses. The benchmark is determined by calculating the average daily inactivation value for each of 12 consecutive months. The lowest monthly average becomes the disinfection benchmark. If the PWS has data from more than 1 year, the benchmark is the average of the lowest monthly average value for each of the years. The Long Term 1 Enhanced Surface Water Treatment Rule (LT1ESWTR) Disinfection Profiling and Benchmarking Technical Guidance Manual (EPA 816-R-03-004, May 2003), provides guidance for developing a disinfection profile and benchmark. EPA has developed two tools for systems to determine their disinfection profile and calculate the benchmark at the following website: www.epa.gov/safewater/mdbp/lt1eswtr.html.

ADDITIONAL GUIDANCE MATERIALS

The following guidance document addresses the source water monitoring requirements for the LT2ESWTR:

- *Source Water Monitoring Guidance Manual for Public Water Systems for the Final Long Term 2 Enhanced Surface Water Treatment Rule* (EPA 815-R06-005 February 2006) - Provides surface water systems, laboratories, states, and Tribes with a review of the source water monitoring provisions. The source water monitoring guidance manual provides direction to the systems on how, where and when to monitor, how to report the data, how to submit "grandfathered" data (e.g., previously collected data), and how the data can be evaluated and used to determine risk bin classification.

For additional guidance on implementing the LT2ESWTR, you may refer to the following existing and future EPA materials:

- LT2ESWTR Quick Reference Guides (Schedule 4)
- On-line Microscopy Training Module
- On-line Sample Collection Module
- *Microbial Laboratory Guidance Manual for the Final Long Term 2 Enhanced Surface Water Treatment Rule* (EPA 815-R06-006 February 2006)
- *Membrane Filtration Guidance Manual* (EPA 815-R-06-009 November 2005)
- Membrane Filtration Guidance Manual: Overview and Summary Factsheet (www.epa.gov/safewater/disinfection/lt2/pdfs/guide_lt2_membranefiltration_fs_final.pdf)
- *Ultraviolet Disinfection Guidance Manual and Workbook* (final version anticipated mid-2006)
- *Simultaneous Compliance Guidance Manual for Stage 2 Rules* (draft version anticipated mid-2006)
- *Small Entity Compliance Guidance* (draft version anticipated mid-2006)
- *Long Term 2 Enhanced Surface Water Treatment Rule Toolbox Guidance Manual* (draft version anticipated late 2006)

For additional information, please contact the Safe Drinking Water Hotline at 1-800-426-4791, send an email to stage2mdbp@epa.gov, or visit www.epa.gov/safewater/disinfection/lt2.

815F05002

United States Environmental Protection Agency

Fact Sheet - Long Term 2 Enhanced Surface Water Treatment Rule

In the past 30 years, the Safe Drinking Water Act (SDWA) has been highly effective in protecting public health and has also evolved to respond to new and emerging threats to safe drinking water. Disinfection of drinking water is one of the major public health advances in the 20th century. One hundred years ago, typhoid and cholera epidemics were common through American cities; disinfection was a major factor in reducing these epidemics.

In the past 15 years, we have learned that there are specific microbial pathogens, such as *Cryptosporidium*, which can cause illness, and are highly resistant to traditional disinfection practices. We also know that the disinfectants themselves can react with naturally-occurring materials in the water to form byproducts, which may pose health risks.

Amendments to the SDWA in 1996 require EPA to develop rules to balance the risks between microbial pathogens and disinfection byproducts (DBPs). The Stage 1 Disinfectants and Disinfection Byproducts Rule and Interim Enhanced Surface Water Treatment Rule, promulgated in December 1998, were the first phase in a rulemaking strategy required by Congress as part of the 1996 Amendments to the Safe Drinking Water Act.

The Long Term 2 Enhanced Surface Water Treatment Rule builds upon earlier rules to address higher risk public water systems for protection measures beyond those required for existing regulations.

The Long Term 2 Enhanced Surface Water Treatment Rule and the Stage 2 Disinfection Byproduct Rule are the second phase of rules required by Congress. These rules strengthen protection against microbial contaminants, especially *Cryptosporidium*, and at the same time, reduce potential health risks of DBPs.

Questions and Answers

What is the LT2ESWTR?

The purpose of Long Term 2 Enhanced Surface Water Treatment Rule (LT2ESWTR) is to reduce illness linked with the contaminant *Cryptosporidium* and other pathogenic microorganisms in drinking water. The LT2ESWTR will supplement existing regulations by targeting additional *Cryptosporidium* treatment requirements to higher risk systems. This rule also contains provisions to reduce risks from uncovered finished water reservoirs and provisions to ensure that systems maintain microbial protection when they take steps to decrease the formation of disinfection byproducts that result from chemical water treatment.

Current regulations require filtered water systems to reduce source water *Cryptosporidium* levels by 2-log (99 percent). Recent data on *Cryptosporidium* infectivity and occurrence indicate that this treatment requirement is sufficient for most systems, but additional treatment is necessary for certain

higher risk systems. These higher risk systems include filtered water systems with high levels of *Cryptosporidium* in their water sources and all unfiltered water systems, which do not treat for *Cryptosporidium*.

The LT2ESWTR is being promulgated simultaneously with the Stage 2 Disinfection Byproduct Rule to address concerns about risk tradeoffs between pathogens and DBPs.

What are the health risks of Cryptosporidium?

Cryptosporidium is a significant concern in drinking water because it contaminates most surface waters used as drinking water sources, it is resistant to chlorine and other disinfectants, and it has caused waterborne disease outbreaks. Consuming water with *Cryptosporidium* can cause gastrointestinal illness, which may be severe and sometimes fatal for people with weakened immune systems (which may include infants, the elderly, and people who have AIDS).

Who must comply with this rule?

This regulation will apply to all public water systems that use surface water or ground water under the direct influence of surface water.

What does the rule require?

Monitoring*:* Under the LT2ESWTR, systems will monitor their water sources to determine treatment requirements. This monitoring includes an initial two years of monthly sampling for *Cryptosporidium*. To reduce monitoring costs, small filtered water systems will first monitor for *E. coli*—a bacterium which is less expensive to analyze than *Cryptosporidium*—and will monitor for *Cryptosporidium* only if their *E. coli* results exceed specified concentration levels.

Monitoring starting dates are staggered by system size, with smaller systems beginning monitoring after larger systems. Systems must conduct a second round of monitoring six years after completing the initial round to determine if source water conditions have changed significantly. Systems may use (grandfather) previously collected data in lieu of conducting new monitoring, and systems are not required to monitor if they provide the maximum level of treatment required under the rule.

Cryptosporidium* treatment:* Filtered water systems will be classified in one of four treatment categories (bins) based on their monitoring results. The majority of systems will be classified in the lowest treatment bin, which carries no additional treatment requirements. Systems classified in higher treatment bins must provide 90 to 99.7 percent (1.0 to 2.5-log) additional treatment for *Cryptosporidium*. Systems will select from a wide range of treatment and management strategies in the "microbial toolbox" to meet their additional treatment requirements. All unfiltered water systems must provide at least 99 or 99.9 percent (2 or 3-log) inactivation of *Cryptosporidium*, depending on the results of their monitoring. These *Cryptosporidium* treatment requirements reflect consensus recommendations of the Stage 2 Microbial and Disinfection Byproducts Federal Advisory Committee.

Other requirements: Systems that store treated water in open reservoirs must either cover the reservoir or treat the reservoir discharge to inactivate 4-log virus, 3-log *Giardia lamblia*, and 2-log *Cryptosporidium*. These requirements are necessary to protect against the contamination of water that occurs in open reservoirs. In addition, systems must review their current level of microbial treatment before making a significant change in their disinfection practice. This review will assist systems in maintaining protection against microbial pathogens as they take steps to reduce the formation of disinfection byproducts under the Stage 2 Disinfection Byproducts Rule, which EPA is finalizing along with the LT2ESWTR.

What are the benefits of the rule?

The LT2ESWTR will improve the control of *Cryptosporidium* and other microbiological pathogens in drinking water water systems with the highest risk levels. EPA estimates that full compliance with the LT2ESWTR will reduce the incidence of cryptosporidiosis - the gastrointestinal illness caused by ingestion of *Cryptosporidium* - by 89,000 to 1,459,000 cases per year, with an associated reduction of 20 to 314 premature deaths. The monetized benefits associated with these reductions ranges from $253 million to $1.445 billion per year. The additional *Cryptosporidium* treatment requirements of the LT2ESWTR will also reduce exposure to other microbial pathogens, such as *Giardia*, that co-occur with *Cryptosporidium*. Additional protection from microbial pathogens will come from provisions in this rule for reviewing disinfection practices and for covering or treating uncovered finished water reservoirs, though EPA has not quantified these benefits.

What are the costs of the rule?

The LT2ESWTR will result in increased costs to public water systems and states. The average annualized present value costs of the LT2ESWTR are estimated to range from $92 to $133 million (using a three percent discount rate). Public water systems will bear approximately 99 percent of this total cost, with states incurring the remaining 1 percent. The average annual household cost is estimated to be $1.67 to $2.59 per year, with 96 to 98 percent of households experiencing annual costs of less than $12 per year.

What technical information will be available on the rule?

The following guidance documents will be available:

- Source Water Monitoring Guidance
- Microbial Laboratory Guidance
- Small Entity Compliance Guidance
- Microbial Toolbox Guidance Manual
- Ultraviolet Disinfection Guidance Manual
- Membrane Filtration Guidance Manual
- Simultaneous Compliance Guidance Manual
- Low-pressure Membrane Filtration for Pathogen Removal: Application, Implementation, and Regulatory Issues

Where can I find more information about this notice and the LT2ESWTR?

For general information on the LT2ESWTR, contact the Safe Drinking Water Hotline at (800) 426-4791. The Safe Drinking Water Hotline is open Monday through Friday, excluding legal holidays, from 10:00 a.m. to 4:00 p.m., Eastern time. For copies of the Federal Register notice of the regulation or technical fact sheets, visit the EPA Safewater website at http://www.epa.gov/safewater/disinfection/lt2. For technical inquiries, email stage2mdbp@epa.gov.

Office of Water (4607M) EPA 815-F-05-009 December 2005 www.epa.gov/safewater

GUIDANCE MANUAL

FOR

COMPLIANCE WITH THE

FILTRATION AND DISINFECTION REQUIREMENTS

FOR

PUBLIC WATER SYSTEMS

USING

SURFACE WATER SOURCES

MARCH 1991 EDITION

SCIENCE AND TECHNOLOGY BRANCH
CRITERIA AND STANDARDS DIVISION
OFFICE OF DRINKING WATER
U.S. ENVIRONMENTAL PROTECTION AGENCY
WASHINGTON, D.C.

Printed on Recycled Paper

GUIDANCE MANUAL
FOR
COMPLIANCE WITH THE
FILTRATION AND DISINFECTION REQUIREMENTS
FOR
PUBLIC WATER SYSTEMS
USING
SURFACE WATER SOURCES

for

Science and Technlogy Branch
Criteria and Standards Division
Office of Drinking Water
U.S. Environmental Protection Agency
Washington, D.C.

Contract No. 68-01-6989

by

Malcolm Pirnie, Inc.
100 Eisenhower Drive
Paramus, New Jersey 07653

HDR Engineering, Inc.
5175 Hillsdale Circle
Eldorado Hills, CA 95630

October, 1990

Printed on Recycled Paper

Acknowledgments

Preparation of this document involved important contributions from many people in two consulting engineering firms, several private consultants, and the United States Environmental Protection Agency (USEPA). Malcolm Pirnie, Inc., with technical contributions provided by HDR Engineering Inc., conducted the day-to-day work under contract with the USEPA.

Principal authors from Malcolm Pirnie were David J. Hiltebrand and Linda Averell Wancho. Personnel from HDR involved in this work were Jerry Troyan and Perri P. Garfinkel. Additional personnel from Malcolm Pirnie who contributed to either the technical content or the preparation of the manual included: John E. Dyksen, James K. Schaefer, Scott L. Phillips and Peter B. Galant.

Private consultants who contributed to the document included: Dr. Appiah Amirtharajah, Georgia Institute of Technology, Atlanta, GA; Dr. Ovadia Lev, Hebrew University, Jerusalem, Israel; Dr. Vincent Oliveri, formerly John Hopkins University, Baltimore, MD; Dr. Phillip C. Singer, University of North Carolina, Chapel Hill, NC; Dr. Mark Wiesner, Rice University, Houston, TX.

Preparation of the document was overseen by Stig Regli, the USEPA project officer. Valuable technical review and major contributions to the text were provided by Thomas Grubbs, Office of Drinking Water, USEPA, and Leigh Woodruff, Region X, USEPA.

Special thanks are given to the following individuals working for USEPA whose review and comment on numerous drafts greatly contributed to the evolution of this document: John Davidson, Office of Policy, Planning and Evaluation; Edwin Geldreich, Drinking Water Research Division, Office of Research and Development; John Hoff, formerly with Drinking Water Research Division, Office of Research and Development; Walt Jakubowski, Environmental Monitoring and Support Laboratory, Office of Research and Development; Dr. Gary Logsdon, formerly with Drinking Water Research Division, Office of Research and Development; Kevin Reilly, Region I; Margaret Silver, Office of General Council; and Jim Westrick, Technical Support Division, Office of Drinking Water.

Appreciation is also expressed to state public health officials, representatives of the drinking water industry, academicians, and the American public for their participation in submitting timely and insightful comments without which this document would not have been possible.

Some of the appendices have primary authors which are noted on the corresponding cover pages.

Printed on Recycled Paper

TABLE OF CONTENTS

1. INTRODUCTION

2. GENERAL REQUIREMENTS

2.1 Application

2.1.1 Types of Water Supplies

2.1.2 Determination of Applicable Sources

2.2 Treatment Requirements

2.3 Operator Personnel Qualifications

3. COMPLIANCE FOR SYSTEMS NOT FILTERING

3.1 Source Water Quality Criteria

3.1.1 Coliform Concentrations

3.1.2 Turbidity Levels

3.2 Disinfection Criteria

3.2.1 Inactivation Requirements

3.2.2 Determination of Overall Inactivation for Residual Profile, Multiple Disinfectants and Multiple Sources and Multiple Sources

3.2.3 Demonstration of Maintaining a Residual

3.2.4 Disinfection System Redundancy

3.3 Site-Specific Conditions

3.3.1 Watershed Control Program

3.3.2 On-site Inspection

3.3.3 No Disease Outbreaks

3.3.4 Monthly Coliform MCL

3.3.5 Total Trihalomethane (TTHM) Regulations

4. DESIGN AND OPERATING CRITERIA FOR FILTRATION AND DISINFECTION TECHNOLOGY

4.1 Introduction
4.2 Selection of Appropriate Filtration Technology
4.2.1 General Descriptions
4.2.2 Capabilities
4.2.3 Selection
4.3 Available Filtration Technologies
4.3.1 Introduction
4.3.2 General
4.3.3 Conventional Treatment
4.3.4 Direct Filtration
4.3.5 Slow Sand Filtration
4.3.6 Diatomaceous Earth Filtration
4.3.7 Alternate Technologies
4.3.8 Nontreatment Alternatives
4.4 Disinfection
4.4.1 General
4.4.2 Recommended Removal/Inactivation
4.4.3 Total Trihalome.thane (TTHM) Regulations

5. CRITERIA FOR DETERMINING IF FILTRATION AND DISINFECTION ARE SATISFACTORILY PRACTICED

5.1 Introduction
5.2 Turbidity Monitoring Requirements
5.2.1 Sampling Location
5.2.2 Sampling Frequency
5.2.3 Additional Monitoring
5.3 Turbidity Performance Criteria
5.3.1 Conventional Treatment or Direct Filtration
5.3.2 Slow Sand Filtration
5.3.3 Diatomaceous Earth Filtration
5.3.4 Other Filtration Technologies
5.4 Disinfection Monitoring Requirements
5.5 Disinfection Performance Criteria
5.5.1 Minimum Performance Criteria Required Under the SWTR
5.5.2 Recommended Performance Criteria
5.5.3 Disinfection By-Product Considerations
5.5.4 Recommended Disinfection System Redundancy
5.5.5 Determination of Inactivation by Disinfection
5.6 Other Considerations

6. REPORTING

6.1 Reporting Requirements for Public Water Systems Not Providing Filtration

6.2 Reporting Requirements for Public Water Systems Using Filtration

7. COMPLIANCE

7.1 Introduction

7.2 Systems Using a Surface Water Source Not Ground Water Under the Direct nfluence of Surface Water)

7.3 Compliance Transition with Current NPDWR Turbidity Requirements

7.4 Systems Using a Ground Water Source Under the Direct Influence of a Surface Water

7.5 Responses for Systems not Meeting the SWTR Criteria

7.5.1 Introduction

7.5.2 Systems Not Filtering

7.5.3 Systems Currently Filtering

8. PUBLIC NOTIFICATION

9. EXEMPTIONS

9.1 Overview of Requirements

9.2 Recommended Criteria

9.3 Compelling Factors

9.4 Evaluation of Alternate Water Supply Sources

9.5 Protection of Public Health

9.6 Notification to EPA

List of Tables

Table	Description
2-1	Survey Form for the Classification of Drinking Water Sources
4-1	Removal Capabilities of Filtration Processes
4-2	Generalized Capability of Filtration Systems to Accommodate Raw Water Quality Conditions
6-1	Source Water Quality Conditions for Unfiltered Systems
6-2	Long Term Source Water Quality Conditions for Unfiltered Systems
6-3	CT Determination for Unfiltered Systems Monthly Report to Primacy Agency
6-4	Disinfection Information for Unfiltered Systems Monthly Report to Primacy Agency
6-5	Distribution System Disinfectant Residual Data for Unfiltered and Filtered Systems - Monthly Report to Primacy Agency
6-6	Monthly Report to Primacy Agency for Compliance Determination - Unfiltered Systems
6-7	Daily Data Sheet for Filtered Systems
6-8	Monthly Report to Primacy Agency for Compliance Deterimination-Filtered Systems
7-1	Requirements for Unfiltered Systems
7-2	Requirements for Filtered Systems
2-1	Steps to Source Classification
3-1	Determination of Inactivation for Multiple Disinfectant Application to a Surface Water Source
3-2	Individually Disinfected Surface Sources Combined at a Single Point
3-3	Multiple Combination Points for Individually Disinfected Surface Sources
4-1	Flow Sheet for a Typical Conventional Water Treatment Plant
4-2	Flow Sheet for Typical Softening Treatment Plants
4-3	Flow Sheet for a Typical Direct Filtration Plant
4-4	Flow Sheet for a Typical Direct Filtration Plant with Flocculation

LIST OF APPENDICES

Appendix	*Description*
A	Use of Particulate Analysis for Source and Water Treatment Evaluation
B	Institutional Control of Legionella
C	Determination Of Disinfectant Contact Time D Analytical Requirements of the SWTR and a Survey of the Current Status of Residual Disinfectant Measurement Methods for all Chlorine Species and Ozone
E	Inactivation Achieved by Various Disinfectants
F	Basis for CT Values
G	Protocol for Demonstrating Effective Disinfection
H	Sampling Frequency for Total Coliforms in the Distribution System
I	Maintaining Redundant Disinfection Capability
J	Watershed Control Program
K	Sanitary Survey
L	Small System Considerations
M	Protocol for Demonstration of Effective Treatment
N	Protocols for Point-of-Use Treatment Devices
0	Guidelines to Evaluate Ozone Disinfection

1. INTRODUCTION

This Guidance Manual complements the filtration and disinfection treatment requirements for public water systems using surface water sources or ground water under the direct influence of surface water promulgated in 40 CFR Part 141, Subpart H. In this manual, these requirements are referred to as in the Surface Water Treatment Rule (SWTR).

The purpose of this manual is to provide guidance to United States Environmental Protection Agency (USEPA) Regional Offices, Primacy Agencies and affected utilities in the implementation of the SWTR, and to help assure that implementation is consistent. For example, the SWTR sets treatment requirements which apply to a large range of source water conditions. The guidance manual suggests design, operating and performance criteria for specific surface water quality conditions to provide the optimum protection from microbiological contaminants. These recommendations are presented as advisory guidelines only; unlike the provisions of the SWTR, these recommendations are not mandatory requirements. In many cases, it will be appropriate to tailor requirements to specific circumstances; the guidance manual is designed to give the Primacy Agency flexibility in establishing the most appropriate treatment requirements for the systems within their jurisdiction.

Throughout this document, the term "Primacy Agency" refers to a State with primary enforcement responsibility for public water systems or "primacy," or to mean EPA in the case of a State that has not obtained primacy.

In order to facilitate the use of this manual, it has been structured to follow the framework of the SWTR as closely as possible. Brief descriptions of the contents of each section of this manual are presented in the following paragraphs.

Section 2

This section provides guidance for determining whether a water supply source is subject to the requirements of the SWTR including the determination of whether a ground water source is under the direct

influence of surface water, i.e. at risk for the presence of Giardia cysts or other large microorganisms. The overall treatment requirements of the SWTR are also presented, along with recommendations for the qualifications of operator personnel.

Section 3

For systems which are subject to the requirements of the SWTR and which do not currently provide filtration, this section provides guidance to the Primacy Agency for determining if a given system:

- Meets the source water quality criteria
- Meets the disinfection requirements including:
  - 99.9 and 99.99 percent inactivation of Giardia cysts and viruses and application of the CT (disinfectant residual concentration x contact time) concept
  - Point of entry to distribution system requirements
  - Distribution system requirements
  - Provision for disinfection system redundancy
- Maintains an adequate watershed control program
- Meets the on-site inspection requirements
- Has not had an identified waterborne disease outbreak
- Complies with the requirements of the revised Total Coliform Rule
- Complies with Total Trihalomethane (TTHM) Rule

Section 4

This section pertains to systems which do not meet the requirements to avoid filtration outlined in Section 3 and therefore are required to install filtration. Guidance is given for the selection of an appropriate filtration technology based on the source water quality and the capabilities of various technologies to achieve the required performance criteria. In addition, recommended design and operating criteria are provided for different filtration technologies.

Section 5

Section 5 presents guidance to the Primacy Agency for determining compliance with the turbidity and disinfection performance requirements, and in turn, whether filtration and disinfection are satisfactorily practiced. Recommendations are made for the level of disinfection to be provided in order to meet the overall treatment requirements of the SWTR. This section describes how to evaluate the adequacy of disinfection using CT or other methods.

Section 6

Section 6 provides guidelines to the Primacy Agency for establishing the reporting requirements associated with the SWTR. The requirements include report content and frequency, and are applicable to both filtering and nonfiltering systems.

Section 7

This section provides an overview of the schedule for Primacy Agencies and utilities to meet the requirements of the SWTR. Examples are presented to provide guidance for corrective measures which can be taken by systems which are not in compliance with the treatment requirements.

Section 8

This section presents guidance on public notification. Included are examples of events which would require notification, language for the notices and the methods of notification.

Section 9

Section 9 provides guidance to the Primacy Agency for determining whether a system is eligible for an exemption. The criteria for eligibility for an exemption include:

- Compelling factors (economic or resource limitations)
- No available alternate source
- Protection of public health

This section also provides guidance for evaluating the financial capabilities of a water system, reviewing the availability of alternate sources and suggests interim measures for protecting public health.

Appendices

The manual also contains appendices which provide more detailed guidance in specific areas. These include:

Appendix A - EPA Consensus Method for Giardia cyst Analysis

Several procedures are available for Giardia cyst analysis in water. In 1983 the USEPA held a conference to establish a consensus on the procedure to be used in the future. This consensus method would promote uniformity in testing and provide a basis for future conparisons. The consensus method and the background data used to develop it are presented in this appendix.

Appendix B - Institutional Control of Legionella

Filtration and/or disinfection provides protection from Legionella. However, it does not assure that recontamination or regrowth will not occur in the hot water or cooling systems of buildings within the distribution system. This appendix provides guidance for monitoring and treatment which can be used by institutional systems for the control of Legionella.

Appendix C - Determination of Disinfectant Contact Time

In many cases, the determination of disinfectant contact times needed to evaluate the CT of a water system will necessitate the use of tracer studies. This appendix provides guidance for conducting these studies. In some cases it may not be practical to conduct a tracer study. For such cases guidance is given for estimating the detention time based on the physical configuration of the system.

Appendix D - Analytical Requirements of the SWTR and A Survey of the Current Status of Residual Disinfectant Measurement Methods for all Chlorine Species and Ozone

This appendix includes a listing of the analytical methods required under the SWTR. An executive summary of a report on the analytical methods used to measure the residual concentrations of the various disinfectants is included. The reliability and limitations of each of the methods are presented.

Appendix E - Inactivations Achieved by the Various Disinfectants

This appendix presents the log inactivations of Giardia cysts and viruses which are achieved at various CT levels by chlorine, chlorine dioxide, chloramines and ozone. Inactivations of viruses achieved by UV absorbance are also included.

Appendix F - Basis for CT Values

This appendix provides the background and rationale utilized in developing the CT values for the various disinfectants. Included is a paper by Clark and Regli, 1990, in which a mathematical model was used in the determination of CT values for free chlorine.

Appendix G - Protocol for Demonstrating Effective Disinfection

This appendix provides the recommended protocols for demonstrating the effectiveness of chloramines, chlorine dioxide and ozone as primary disinfectants.

Appendix H - Sampling Frequency for Total Coliforms in the Distribution System

The sampling frequency required by the revised Total Coliform Rule 54 FR 27544 (June 29, 1989) is presented in this appendix.

Appendix I - Maintaining
Redundant Disinfection Capability

This appendix details the conditions and equipment which should be maintained by a system using chlorine, chlorine dioxide, ozone or chloramines to assure that compliance with the SWTR requirement for redundant disinfection is met.

Appendix J - Watershed Control Program

This appendix provides a detailed outline of a watershed program. This program may be adjusted by the Primacy Agency to serve the specific needs of a particular water system.

Appendix K - Sanitary Survey

This appendix provides guidance for conducting a comprehensive sanitary survey of a supply source and its treatment and delivery to the consumer. Suggested elements of an annual on-site inspection are included in Section 3.

Appendix L - Small System Considerations

This appendix describes difficulties which may be faced by small systems in complying with the SWTR along with guidelines for overcoming these difficulties.

Appendix M - Protocol for the
Demonstration of Effective Treatment

This appendix presents pilot study protocols to evaluate the effectiveness of an alternate filtration technology in meeting the performance requirements of the SWTR. It presents the use of particle size analysis for demonstrating the actual removal of Giardia cyst achieved by a treatment train. Guidance for conventional and direct filtration plants to demonstrate that adequate filtration is being maintained at effluent turbidities between 0.5 and 1 Nephelometric Turbidity Unit (NTU) is also included.

Appendix N - Protocol for
Point-of-Use Treatment Devices

In some limited cases, it may be appropriate to install point-of-use (POU) or point-of-entry (POE) treatment devices as an interim measure to provide protection to the public health. This appendix provides a protocol for evaluating and determining the efficacy of POU/POE treatment devices.

Appendix O - Guidelines to
Evaluate Ozone Disinfection

The CT evaluation used for other disinfectants is inappropriate for ozone. This appendix presents alternative methods for evaluating the disinfection effectiveness of ozone systems.

2. GENERAL REQUIREMENTS

2.1 Application

The SWTR pertains to all public water systems which utilize a surface water source or ground water source under the direct influence of surface water. The SWTR defines a surface water as all waters which are open to the atmosphere and subject to surface runoff. Ground water under the direct influence of surface water is defined as: any water beneath the surface of the ground with (i) significant occurrence of insects or other macroorganisms, algae, organic debris, or large-diameter pathogens such as Giardia lamblia, or (ii) significant and relatively rapid shifts in water characteristics such as turbidity, temperature, conductivity, or pH which closely correlate to climatological or surface water conditions. Direct influence must be determined for each individual source in accordance with criteria established by the Primacy Agency. The Primacy Agency criteria may provide for documentation of well construction and geology, with field evaluation, or site-specific measurements of water quality as explained in Section 2.1.2.

Saline water sources such as the ocean are not generally considered to be subject to the requirements of the SWTR because of the low survival time of pathogens in a saline environment (Geldreich, 1989). Pathogens generally can only survive a few hours in saline water and any remaining pathogens should be removed or inactivated during desalination. However, it is up to the Primacy Agency's discretion to determine which systems must meet the SWTR requirements. In cases where there is a sewage discharge located near the water intake, it may be appropriate for the Primacy Agency to require the system to comply with the SWTR.

The traditional concept that all water in subsurface aquifers is free from pathogenic organisms is based upon soil being an effective filter that removes microorganisms and other relatively large particles by straining and antagonistic effects (Bouwer, 1978). In most cases pathogenic bacteria retained in the soil find themselves in a hostile environment, are not able to multiply and eventually die. However, some underground sources of drinking water may be subject to contamination by pathogenic organisms from the direct influence of nearby surface waters.

Only those subsurface sources which are at risk to contamination from Giardia cysts will be subject to the requirements of the SWTR. Giardia

cysts generally range in size from 7 to 12 um. Subsurface sources which may be at risk to contamination from bacteria and enteric viruses, but which are not at risk from Giardia cysts will be regulated either under the Total Coliform Rule or forthcoming disinfection treatment requirements for ground waters. EPA intends to promulgate disinfection requirements for ground water systems in conjunction with regulations for disinfection by-products by 1992.

2.1.1 Types of Water Supplies

Surface Waters

Surface water supplies that are often used as sources of drinking water include two major classifications, running and quiescent waters. Streams, rivers and brooks are examples of running water, while lakes, reservoirs, impoundments and ponds are examples of quiescent waters. The exposure of surface waters to the atmosphere results in exposure to precipitation events, surface water runoff and contamination with micro and macroorganisms resulting from activities in their surrounding areas. These sources are subject to the requirements of the SWTR.

Systems with rain water catchments not subject to surface runoff (e.g. roof catchment areas) are not considered vulnerable to contamination from animal populations which carry protozoan cysts pathogenic to humans and are thus not subject to the SWTR requirements. However, such systems should at least provide disinfection to treat for potential bacterial and viral contamination coming from bird populations.[1]

Ground Waters under Direct Influence of Surface Water

Ground water sources which may be subject to contamination with pathogenic organisms from surface waters include, springs, infiltration galleries, wells or other collectors in subsurface aquifers. The following section presents a recommended procedure for determining whether a source will be subject to the requirements of the SWTR. These determinations are to be made for each individual source. If the determination will involve an evaluation of water quality, eg. particulate analysis, it is important that these analyses be made on water taken

---

[1] One study (Markwell and Shortridge, 1981) indicates that a cycle of waterborne transmission and maintenance of influenza virus may exist within duck communities, and that it is conceivable for virus transmission to occur in this manner to other susceptible animals, including humans.

directly from the source and not on blended water or water from the distribution system.

2.1.2 Determination of Applicable Sources

The Primacy Agency has the responsibility for determining which water supplies must meet the requirements of the SWTR. However, it is the responsibility of the water purveyors to provide the Primacy Agency with the information needed to make this determination. This section provides guidance to the Primacy Agency for determining which water supplies are surface waters or ground waters directly influenced by a surface water and are thereby subject to the requirements of the SWTR. Following the determination that the source is subject to the SWTR, the requirements enumerated in Sections 2.2 and 2.3 must be met.

The Primacy Agency must develop a program for evaluating ground water sources for direct influence by December 30, 1990. All community ground water systems must be evaluated by June 29, 1994, while all non-community systems must be evaluated by June 29, 1999. Primacy Agencies with an approved Wellhead Protection (WHP) Program, may be able to use the WHP program's requirements which include delineation of wellhead protection areas, assessment of sources of contamination and implementation of management control measures. These same requirements can be used for meeting the requirements of the watershed control program for ground water under the direct influence of a surface water.

A multiple step approach has been developed as the recommended method of determining whether a ground water source is under direct influence of a surface water. This approach includes the review of information gathered during sanitary surveys. As defined by the USEPA, a sanitary survey is an on-site review of the water source, facilities, equipment operation and maintenance of a public water system for the purpose of evaluating the adequacy of such source, facilities, equipment, operation and maintenance for producing and distributing safe drinking water. Sanitary surveys are required under the Total Coliform Rule and may be required under the forthcoming disinfection requirements for ground water systems as a condition for obtaining a variance or for determining the level of disinfection required. Therefore, it is recommended that the determination of direct influence be correlated with the sanitary surveys conducted under these other requirements.

A. Source Evaluation Protocol

As illustrated on Figure 2-1, the determination of whether a source is subject to the requirements of the SWTR may involve one or more of the following steps:

1. A review of the records of the system's source(s) to determine whether the source is obviously a surface water, i.e. pond, lake, streams, etc.

2. If the source is a well, determination of whether it is clearly a ground water source, or whether further analysis is needed to determine possible direct surface water influence.

3. A complete review of the system's files followed by a field sanitary survey. Pertinent information to gather in the file review and field survey includes: source design and construction; evidence of direct surface water contamination; water quality analysis; indications of waterborne disease outbreaks; operational procedures (i.e. pumping rates, etc.); and customer complaints regarding water quality or water related infectious illness.

4. Conducting particulate analyses and other water quality sampling and analyses.

Step 1. Records Review

A review of information pertaining to each source should be carried out to identify those sources which are obvious surface waters. These would include ponds, lakes, streams, rivers, reservoirs, etc. If the source is a surface water, then the SWTR would apply, and criteria in the rule would need to be applied to determine if filtration is necessary. If the source is not an obvious surface water, then further analyses, as presented in Steps 2, 3, or 4, are needed to determine if the SWTR will apply. If the source is a well (vertical or horizontal), go to Step 2. If the source is a spring, infiltration gallery, or any other subsurface source, proceed to Step 3 for a more detailed analysis.

Step 2. Review of Well Sources

While most well sources have historically been considered to be ground water, recent evidence suggests that some wells, especially shallow wells constructed near surface waters, may be directly influenced by surface water. One approach in determining whether a well is subject to contamination by surface water would be to evaluate the water quality of the well by the criteria in Step 4. However, this process is rather time

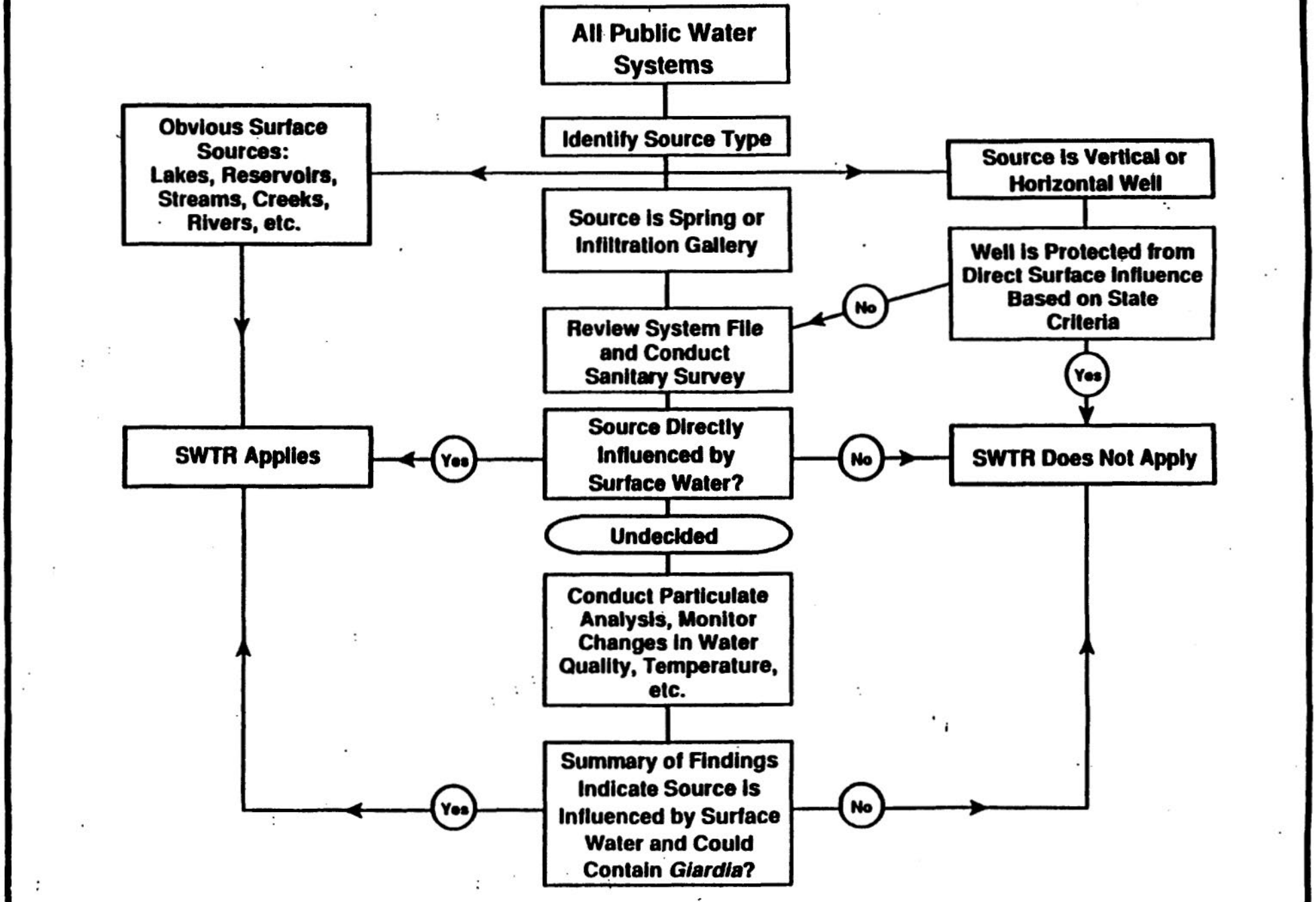

FIGURE 2-1 - STEPS TO SOURCE CLASSIFICATION

consuming and labor intensive. In an attempt to reduce the effort needed to evaluate well sources, a set of criteria has been developed to identify wells in deep, well protected aquifers which are not subject to contamination from surface water. While these criteria are not as definitive as water quality analysis, it is believed that they provide a reasonable degree of accuracy, and allow for a relatively rapid determination for a large number of well sources in the U.S.

Wells with perforations or a well screen less than or equal to 50 feet in depth are considered to be shallow wells, and should be evaluated for direct surface influence according to steps 3 and/or 4. For wells greater than 50 feet in depth, State or system files should be reviewed for the criteria listed below:

1. The well construction should include:
   - A surface sanitary seal using bentonite clay, concrete or other acceptable material.
   - A well casing that penetrates a confining bed.
   - A well casing or collector laterals that are only perforated or screened below a confining bed.

   The importance of evaluating the hydrogeology of wells or collectors, even those more than 200 feet from a surface water, cannot be overstated. The porosity and transmissivity of aquifer materials, hydrologic gradients, and continuity of confining layers above screens or perforations may need to be considered in detail for some sources. Porous aquifer material is more likely to allow surface water to directly influence ground water than finer grained materials. In addition, high well pumping rates may alter the existing hydrologic gradient. Ground water flow direction may change such that surface water is drawn into a collector, whereas under low pumping rates it may not. Evaluating pumping rate effects and other hydrogeologic information must be done on a site specific basis.

   If information on well construction or hydrogeology are incomplete or raise questions regarding potential surface water influence, a more detailed analysis in steps 3 and 4 should be considered.

2. The casing or nearest collector lateral should be located at least 200 feet from any surface water.

3. The water quality records should indicate:

- No record of total coliform or fecal coliform contamination in untreated samples collected over the past three years.

- No history of turbidity problems associated with the source.

- No history of known or suspected outbreak of Giardia, or other pathogenic organism associated with surface water (e.g. Cryptosporidium), which has been attributed to that source.

4. If data is available for particulate matter in the well there should be:

    - No evidence of particulate matter associated with surface water.

    If data is available for turbidity or temperature from the well and a nearby surface water there should be:

    - No turbidity or temperature data which correlates to that of a nearby surface water.

Wells that meet all of the criteria listed above are not subject to the requirements of the SWTR, and no additional evaluation is needed. Wells that do not meet all the requirements listed require further evaluation in accordance with Steps 3 and/or 4 to determine whether or not they are directly influenced by surface water.

Step 3. On-site Inspection

For sources other than a well source, the State or system files should be reviewed for the source construction and water quality conditions as listed in Step 2. Reviewing historical records in State or system files is a valuable information gathering tool for any source. However, the results may be inconclusive. A sanitary survey in the field may be helpful in establishing a more definite determination of whether the water source is at risk to pathogens from direct surface water influence.

Information to obtain during an on-site inspection include:

- Evidence that surface water enters the source through defects in the source such as lack of a surface seal on wells, infil-

tration gallery laterals exposed to surface water, springs open to the atmosphere, surface runoff entering a spring or other collector, etc.

- Distances to obvious surface water sources.

If the survey indicates that the well is subject to direct surface water influence, the source must either be reconstructed as explained later in this section or it must be treated in accordance with the requirements for the SWTR. If the survey does not show conclusive evidence of direct surface water influence, the analysis outlined in Step 4 should be conducted.

The Washington State Department of Social and Health Services has developed a form to guide them and provide consistency in their evaluation of sources for surface water influence (Notestine & Hudson, 1988). Table 2-1 provides a copy of this form as a guide for evaluating sources.

Step 4. Particulate Analysis and Other Indicators

a. Surface Water Indicators

Particulate analysis is intended to identify organisms which only occur in surface waters as opposed to ground waters, and whose presence in a ground water would clearly indicate that at least some surface water has been mixed with it. The EPA Consensus Method in Appendix A can be used for Giardia cyst analysis.

In 1986 Hoffbuhr et. al. listed six parameters identifiable in a particulate analysis which were believed to be valid indicators of surface contamination of ground water. These were: diatoms, rotifers, coccidia, plant debris, insect parts, and Giardia cysts. Later work by Notestine and Hudson (1988) found that microbiologists did not all define plant debris in the same way, and that deep wells known to be free of direct surface water influence were shown by particulate analysis to contain "plant debris" but none of the other five indicators. Their work suggests that "plant debris" may not currently be a useful tool in determining direct surface water influence, but may be in the future when a standard definition of "plant debris" is developed. Therefore, it is recommended that only the presence of the other five parameters; diatoms and certain other algae, rotifers, coccidia, insect parts, and Giardia, be used as

TABLE 2-1

SURVEY FORM FOR THE CLASSIFICATION OF DRINKING WATER SOURCES

General

1. Utility Name (ID#) _____

2. Utility Person(s) Contacted _____

3. Source Type (As shown on state inventory)

___ Spring ___ Horizontal Well ___ Vertical Well
___ Infiltration System ___ Shallow Well

4. Source Name _____ Year constructed _____

5. Is this source used seasonally or intermittently? No ____ Yes____
If yes, are water quality problems the reason? No ____ Yes____

6. Has there ever been a waterborne disease outbreak associated with this source? Yes _____ No _____ If yes, explain _____

_____

7. Have there been turbidity or bacteriological MCL violations within the last five years associated with this source? No ____ Yes ____
If yes, describe frequency, cause, remedial action (s) taken _____

_____

8. Have there been consumer complaints within the past five years associated with this source? No _____ Yes _____ If yes, discuss nature, frequency, remedial action taken _____

_____

9. Is there any evidence of surface water intrusion (pH, temperature, conductivity, etc. changes) during the year? Yes _____ No _____
If yes, describe _____

_____

If not, submit supporting data.

10. Sketch of source in plan view (on an additional sheet)

Shallow Wells

1. Does the well meet good sanitary practices regarding location, construction, seal etc. to prevent the entrance of surface water?
   Yes ____ No ____ If no, describe the deficiencies _____

2. What is the depth of the well? _____ (ft)
   Elevation of top of casing? _____ (ft msl)
   Elevation of land surface? _____ (ft msl)

3. Hydrogeology (Attach copy of well log or summarize it on reverse)
   a. Depth to static water level? (Feet) _____
   b. Drawdown? (Feet) _____
   c. What is the depth to the highest screen or perforation? (Feet) _____
   d. Are there impervious layers above the highest screen of perforation?
      Yes _____ No _____ Unknown _____
      If yes, please describe _____

4. Is there a permanent or intermittent surface water within 200 feet of the well? Yes ____ No _____ If yes, describe (type, distance etc.) and submit location map

   _____

   _____

   What is the elvation of normal pool? _____ (ft msl)
   Elevation of 100 year flood level? _____ (ft msl)
   Elevation of bottom of lake or river? _____ (ft msl)

5. Additional comments: _____

   _____

Springs

1. a. What is the size of the catchment area (acres)? _____
   b. Give a general description of the area (terrain; vegetation; soil etc.)

   _____

   _____

2. What is the vertical distance between the ground surface and the nearest point of entry to the spring collector(s) (feet)? _____

   _____

3. How rapidly does rainfall percolate into the ground around the spring?

   ____ Percolates readily; seldom if ever any runoff.
   ____ Percolates readily but there is some runoff in heavy rain.
   ____ Percolates slowly. Most local rainfall ponds or runs off.
   ____ Other _____

4. Does an impervious layer prevent direct percolation of surface water to the collector(s)? Yes _____ No _____ Unknown _____

5. Is the spring properly constructed to prevent entry of surface water? Yes _____ No _____

6. Sediment
   a. Is the spring box free of debris and sediment? Yes ___ No ___
   b. When was it last cleaned (Date) _____
   c. How often does it need to be cleaned? (month) _____
   d. How much sediment accumulates between cleaning? (estimate in inches)

   _____

7. Additionalcomments: _____

   _____

Infiltration Systems

1. What are the shortest distances (vertical and horizontal separating the collector from the nearest surface water? (Feet) _____

_____

2. Does turbidity of the source vary 0.2 NTU or more throughout the year? Yes _____ No _____ Not measured _____
If yes, describe how often and how much (pH, temperature, conductivity, etc.)

_____

_____

3. AdditionalComments_____

_____

_____

Survey Conducted By: _____ Date: _____

Decision? Surface Impacted Source Yes _____ No _____ If no, further evaluation needed (particulate analysis, etc.)

indicators of direct surface contamination. In addition, if other large diameter (> 7 um) organisms which are clearly of surface water origin such as Diphilobothrium are present, these should also be considered as indicators of direct surface water influence.

b. Interpretation

Since standard methods have not been developed specifically for particulate analysis, there has not been consistency in the way samples have been collected and analyzed. Differences in the degree of training and experience of the microbiologists has added further to the difficulty in comparing results from sample to sample, and system to system. The current limitations in sample collection and analytical procedures must be considered when interpreting the results. Until standardized methods are developed, the EPA Consensus Method included in Appendix A is recommended as the analytical method for particulate analysis. The following is a discussion of the significance of finding the six indicators identified above.

Identification of a Giardia cyst in any source water should be considered conclusive evidence of direct surface water influence. The repeated presence of diatoms in source water should be considered as conclusive evidence of direct surface water influence. However, it is important that this determination be based on live diatoms, and not empty silica skeletons which may only indicate the historical presence of surface water.

Bluegreen, green, or other chloroplast containing algae require sunlight for their metabolism as do diatoms. For that reason their repeated presence in source water should also be considered as conclusive evidence of direct surface water influence.

Hoffbuhr (1986) indicates that rotifers and insect parts are indicators of surface water. Others have pointed out though that rotifers do not require sunlight, and not all rotifers require a food source such as algae which originates in surface water. Their nutritional requirements may be satisfied by organic matter such as bacteria, or decomposing soil organic material, not necessarily associated with surface water. More precise identification of rotifers, i.e. to the species level, is necessary to determine the specific nutritional requirements of the rotifer(s) present. Further information on identifying rotifer species and on which species require food sources originating in surface water,

would be valuable, but is not readily available at this time. Without knowledge of which species is present, the finding of rotifers indicates that the source is either a) directly influenced by surface water, or b) it contains organic matter sufficient to support the growth of rotifers. It could be conservatively assumed based on this evidence alone that such a source is directly influenced by surface water. However, it is recommended that this determination be supported by other evidence, eg. the source is near a surface water, turbidity fluctuations are significant, etc.

Insects or insect parts likewise may originate in surface water, from the soil, or they may be airborne in uncovered sources. If insects are observed in a particulate analysis sample, it should be confirmed if possible that there is no other route by which insects could contaminate the source other than surface water. For example, if a spring is sampled, and the cover is not well constructed, it is possible that insects found in a sample were airborne rather than waterborne. Insects which spend a portion of their lifecycle in water are the best indicators of direct surface water influence, for example, larvae of mayflies, stoneflies, damselflies, and dragonflies. Terrestrial insects should not be ruled out as surface water indicators though, since their accidental presence in surface water is common.

Howell, (1989) has indicated that some insects may burrow and the finding of eggs or burrowing larvae (eg. chironomids) may not be good indicators of direct surface water influence. For some insects this may be true, but the distance which insects burrow in subsurface sediments is expected to be small, and insect larvae are generally large in comparison to Giardia cysts. Until further research suggests otherwise, it is recommended that insects or insect parts be considered strong evidence of surface water influence if not direct evidence in and of themselves. The strength of this evidence would be increased if the source in question is near a surface water, and particulate analysis of the surface water found similar insects.

Coccidia are intracellular parasites which occur primarily in vertebrates, eg. animals and fish, and live in various tissues and organs including the intestinal tract (eg. Cryptosporidium). Though not frequently identified by normal particulate analysis techniques, coccidia are good indicators of direct surface water contamination since they

require a vertebrate host or hosts and are generally large in size (10 - 20 um or greater). Cryptosporidium is commonly found in surface water, but due to its small size (4 - 6 um) it is not normally identified without specific antibody staining techniques.

Other macroorganisms (>7 um) which are parasitic to animals and fish may be found and are good indicators of surface water influence. Examples include, but are not limited to, helminths (e.g., tape worm cysts), ascaris, and Diphyllobothrium.

c. Sampling Method

A suggested protocol for collecting samples is listed below.

- Sampling Procedure

  Samples should be collected using the equipment outlined in the EPA Consensus Method included in Appendix A.

- Location

  Samples should always be collected as close to the source as possible, and prior to any treatment. If samples must be taken after disinfection, samples should be noted and analyzed as soon as possible.

- Number

  A minimum of two samples should be collected during the period the source is most susceptible to surface water influence. Such critical periods will vary from system to system and will need to be determined case by case. For some systems, it may be one or more days following a significant rainfall (eg. 2" in 24 hours). For other systems it may be a period of maximum flows and stream turbidities following spring snowmelt, or during the summer months when water tables are elevated as a result of irrigation. In each case, particulate samples should be collected when the source in question is most effected. A surrogate measure such as source turbidity or depth to water table may be useful in making the decision to monitor. If there is any ambiguity in the particulate analysis results, additional samples should be collected when there is the greatest likelihood that the source will be contaminated by surface water.

- Volume

  Sample volume should be between 500 and 1000 gallons, and should be collected over a 4 to 8 hour time period. It is preferable to analyze a similar (+/- 10%) volume of water for all sources, preferably a large volume, although this may not always be possible due to elevated turbidity or sampling logistics. The volume filtered should be recorded for all samples.

d. Other Indicators

A number of other indicators could be used to provide supportive evidence of surface influence. While particulate analysis probably provides the most direct evidence that pathogens from surface water could be migrating into a ground water source, other parameters such as turbidity, temperature, pH and conductivity could provide supportive, but less direct, evidence.

Turbidity fluctuations of greater than 0.5 - 1 NTU over the course of a year may be indicative of surface water influence. Considerable caution should be used when evaluating turbidity changes though, since the turbidity could be caused by very small particles (< 1um) not originating in a surface water or it could be that larger particles are being filtered out and only the very smallest particles migrate into the water source. Only ground water sources at risk to contamination from Giardia or other large pathogens (> 7 um) are subject to the SWTR requirements.

Temperature fluctuations may also indicate surface water influence. Fortunately these are easy to obtain and if there is a surface water within 500 feet of the water source, measurements of both should be recorded for comparison. Large changes in surface water temperature closely followed by similar changes in source temperature would be indicative of surface water influence. Also, temperature changes (in degrees F) of greater than 15 to 20% over the course of a year appear to be a characteristic of some sources influenced by surface water (Randall, 1970). Changes in other chemical parameters such as pH, conductivity, hardness,etc. could also be monitored. Again, these would not give a direct indication of whether pathogens originating in surface water were present, but could indicate whether the water chemistry was or was not similar to a nearby surface water and/or whether source water chemistry changed in a similar pattern to surface water chemistry. At this time no numerical guidelines are available to differentiate what is or is not similar, so these comparisons are more qualitative than quantitative.

B. Seasonal Sources

Some sources may only be used for part of the year, for example during the summer months when water usage is high. These sources should not be excluded from evaluation and, like other sources, should be evaluated during their period(s) of highest susceptibility. Particular

attention should be given to those sources which appear to be directly influenced by surface water during part of the year. There may be times during which these subsurface water sources are not influenced by surface water and other times when they are part or all surface water. If that is the case, then it is critical that careful testing be done prior to, during and at the end of the use of the source. This should be done over several seasons to account for seasonal variation. In practice, it is preferable to use sources which are less vulnerable to contamination since susceptible sources will necessitate ongoing monitoring and close attention to operation.

C. Modification of Sources

Sources directly influenced by surface water may be altered in some cases to eliminate the surface water contamination. Primacy Agencies may elect to allow systems with such sources to modify the construction of the source and/or the area surrounding the source in an effort to eliminate surface water contamination. Since this could be expensive and take considerable time to evaluate for effectiveness, careful consideration should be given to the decision to modify a source. In deciding whether source modification is appropriate, systems and Primacy Agencies should consider the following points:

- Is the cause of the surface water contamination known? If the specific cause or point of surface water contamination is not known, it will not be possible to determine an effective control strategy. Further, there may be several reasons why the source is susceptible to direct surface water influence. For example, an infiltration gallery may receive surface water because some of its laterals are exposed in the bed of a nearby stream, and also because laterals distant from the stream are shallow and are affected by surface runoff. Simply modifying or eliminating one or the other set of laterals in this case would not entirely eliminate surface water influence.

- What is the likelihood that modification of the source will be effective? Assuming that the source of contamination has been identified, the expected effectiveness of control measures should be evaluated. If the cause is relatively evident, a crack in a well casing or an uncovered spring box for example, then there is a high degree of confidence that an effective solution could be developed. Should the nature of the contamination be more diffuse, or widespread, then the merits of spending time and money to modify the source should be carefully considered. In the case of the example above, eliminating the use of the laterals under the stream will solve part of the

problem. However, without considerably more hydrogeologic information about the aquifer and the placement of the other laterals, it is not clear what, if any, control measures would effectively eliminate direct surface water influence in those laterals distant from the stream.

If a source is identified as being directly influenced by surface water, and it is decided to attempt to modify it, interim disinfection practices which will ensure at least 99.9% inactivation of Giardia should be considered. Methods and levels of disinfection which can be used to achieve such removals can be found in S141.72 (a) of the SWTR and in Section 3.2 of this manual.

A partial listing of types of modifications which could be undertaken includes:

- Diverting surface runoff from springs by trenching, etc.
- Redeveloping springs to capture them below a confining layer.
- Covering open spring collectors.
- Reconstructing wells to install sanitary seals, and/or to screen them in a confined (protected) aquifer.
- Repairing cracks or breaks in any type of source collector that allows the entry of surface contaminants.
- Discontinue the use of infiltration laterals which intercept surface water.

An extended period of monitoring should follow reconstruction (eg. through at least two years or critical periods) to evaluate whether the source is still directly influenced by surface water. Preferably particulate analysis would be used to make such evaluations, but it may be helpful to use simpler measures, such as temperature and turbidity, as screening tools. Longer term monitoring at critical times may also be an appropriate agreement between the system and the Primacy Agency if there is still doubt about the long term effectiveness of the solution.

If modification is not feasible, another alternative to avoid having to comply with the SWTR may be to develop a new well either deeper or at a different location.

2.2 Treatment Requirements

According to the SWTR, all community and noncommunity public water systems which use a surface water source or a ground water under the direct influence of a surface water must achieve a minimum of 99.9 percent (3-log) removal and/or inactivation of Giardia cysts, and a minimum of 99.99 percent (4-log) removal and/or inactivation of viruses. In the SWTR and this manual, "viruses" means viruses of fecal origin which are infectious to humans by waterborne transmission. Filtration plus disinfection or disinfection alone may be utilized to achieve these performance levels, depending on the source water quality and site specific conditions. The SWTR establishes these removal and/or inactivation requirements based on Giardia and viruses because this level of treatment will also provide protection from heterotrophic plate count (HPC) bacteria and Legionella[2] as required in the SDWA amendments.

Guidelines for meeting the requirements of the SWTR are provided in the remainder of this manual as outlined in Section 1. All systems must meet the operator qualifications presented in Section 2.3.

2.3 Operator Personnel Qualifications

The SWTR requires that all systems must be operated by qualified personnel. It is recommended that the Primacy Agency set standards for operator qualifications, in accordance with the system type and size. In order to accomplish this, the Primacy Agency should develop a method of evaluating an operator's competence in operating a water treatment system. Primacy Agencies which do not currently have a certification program are thereby encouraged to implement such a program. An operator certification program provides a uniform base for operator qualifications and an organized system for evaluating these qualifications.

It is recommended that plant operators have a basic knowledge of science, mathematics and chemistry involved with water treatment and supply. The minimum requirements for at least one key staff member should include an understanding of:

---

[2] In the SWTR and this manual "Legionella" means a genus of bacteria, some species of which have caused a type of pneumonia called Legionnaires Disease; the etiologic agent of most cases of Legionnaires Disease examined has been L. pneumophila.

- The principles of water treatment and distribution and their characteristics
- The uses of potable water and variations in its demand
- The importance of water quality to public health
- The equipment, operation and maintenance of the distribution system
- The treatment process equipment utilized, its operational parameters and maintenance
- The principles of each process unit (including the scientific basis and purpose of the operation and the mechanical components of the unit)
- Performance criteria such as turbidity, total coliform, fecal coliform, disinfectant residual, pH, etc. to determine operational adjustments
- Common operating problems encountered in the system and actions to correct them
- The current National Primary Drinking Water Regulations, the Secondary Drinking Water Regulations and monitoring and reporting requirements
- Methods of sample collection and sample preservation
- Laboratory equipment and tests used to analyze samples (where appropriate)
- The use of laboratory results to analyze plant efficiency
- Record keeping
- Customer relations
- Budgeting and supervision (where appropriate)

Training in the areas listed above and others is available through the American Water Works Association (AWWA) training course series for water supply operations. The course series includes a set of four training manuals and one reference book as follows:

- Introduction to Water Sources and Transmission (Volume 1)
- Introduction to Water Treatment (Volume 2)
- Introduction to Water Distribution (Volume 3)
- Introduction to Water Quality Analyses (Volume 4)

- Reference Handbook: Basic Science Concepts and Applications
- Instructor Guide and Solutions Manual for Volumes 1, 2, 3 and 4

These manuals are available through the American Water Works Association, 6666 West Quincy Avenue, Denver, Colorado 80235 USA, (303) 794-7711.

The State of California also offers a series of training manuals for water treatment plant operators prepared by the California State University School of Engineering in Sacramento. The manuals include:

1. Water Supply System Operation. (1 Volume)
2. Water Treatment Plant Operation. (2 Volumes)

These operator training manuals are available from California State University, Sacramento, 6000 J Street, Sacramento, California 95819, phone (916) 454-6142.

Completion of an established training and certification program will provide the means of assuring that the operators have received training in their respective area, and are qualified for their position. The education and experience requirements for certification should be commensurate with the size and the complexity of the treatment system. At the present time, some states have instituted a certification program while others have not. Following is a summary of the basic contents of a certification program, which can serve as a guide to the Primacy Agency in developing a complete program.

- Board of examiners for the development and implementation of the program.
- Classification of treatment facilities by grade according to the size and technology of the facilities.
- Educational and experience requirements for operators of the various treatment facilities according to grade.
- A written/oral examination to determine the knowledge, ability and judgement of the applicants with certification obtained upon receiving a passing grade.
- Renewal program for the license of certification, including the requirement of additional coursework or participation in workshops.

The certification program should provide technically qualified personnel for the operation of the plant.

The extensive responsibility which is placed on the operating personnel warrants the development of an outline of the responsibilities and authority of the personnel members to aid them in the efficient operation of the plant. The major responsibilities which should be delegated in the outline of responsibilities include: the normal day-to-day operations, preventive maintenance, field engineering, water quality monitoring, troubleshooting, emergency response, cross-connection control, implementation of improvements, budget formulation, response to complaints and public/press contact. A reference which the Primacy Agency may utilize in developing the outline is "Water Utility Management Practices" published by AWWA.

3. CRITERIA FOR SYSTEMS NOT FILTERING

The provisions of the Surface Water Treatment Rule (SWTR) require that filtration must be included in the treatment train unless certain criteria are met. These criteria are described in this chapter. They include:

Source Water Quality Conditions

1. Coliform concentrations (total or fecal).
2. Turbidity levels.

Disinfection Criteria

1. Level of disinfection.
2. Point of entry disinfection.
3. Distribution system disinfection.
4. Disinfection redundancy or automatic shutoff.

Site-Specific Criteria

1. Watershed control program.
2. On-site inspections.
3. No waterborne disease outbreaks.
4. Complies with the total coliform MCL.
5. Complies with the Total Trihalomethane (TTHM) regulation. Currently this only applies to systems serving more than 10,000 people.

The purpose of this section is to provide guidance to the Primacy Agency for determining compliance with these provisions.

3.1 Source Water Quality Criteria

The first step in determining if filtration is required for a given surface water supply is to determine whether the supply meets the source water quality criteria as specified in the SWTR. If the supply does not meet the source water quality criteria, changes in operation to meet the site-specific criteria may improve the water quality so that the source

criteria will be met. However, if the Primacy Agency believes that the source water quality criteria and/or the site-specific criteria cannot be met, or that filtration is appropriate regardless, the Primacy Agency may require the installation of filtration without a complete evaluation to determine whether the system meets all the criteria required to avoid filtration.

Sampling Location

The SWTR requires that source water samples be collected at a location just prior to the "point of disinfectant application," i.e., where the water is disinfected and no longer subject to surface runoff. For example, a system which has multiple reservoirs in series, where each of the reservoirs has previously been disinfected and receives surface runoff, must take the raw water sample(s) just prior to the point of disinfection or disinfection sequences used for calculating the CT [disinfectant residual (mg/L) x contact time (min.)]. Disinfected water in reservoirs receiving surface runoff cannot be counted toward CT credit. It is also not appropriate for systems to monitor the source water after the "point of disinfectant application" even if disinfection from this point is not used for calculating CT credit.

3.1.1 Coliform Concentrations: The SWTR states that, to avoid filtration, a system must demonstrate that either the fecal coliform concentration is less than 20/100 ml or the total coliform concentration is less than 100/100 ml in the water prior to the point of disinfectant application in 90 percent of the samples taken during the six previous months. Where monitoring for both parameters has been or is conducted, the rule requires that only the fecal coliform limit be met. However, EPA recommends that the analytical results for both total coliforms and fecal coliforms be reported. In addition, if the turbidity of a surface water source is greater than 5 NTU and the surface source is blended with a ground water source to reduce the turbidity, EPA recommends that the high turbidity water prior to blending meet the fecal coliform source water quality criteria.

Elevated coliform levels in surface water indicate higher probabilities of fecal contamination, some of which could be protected from exposure to disinfection by embodiment in particulate matter. Blending of

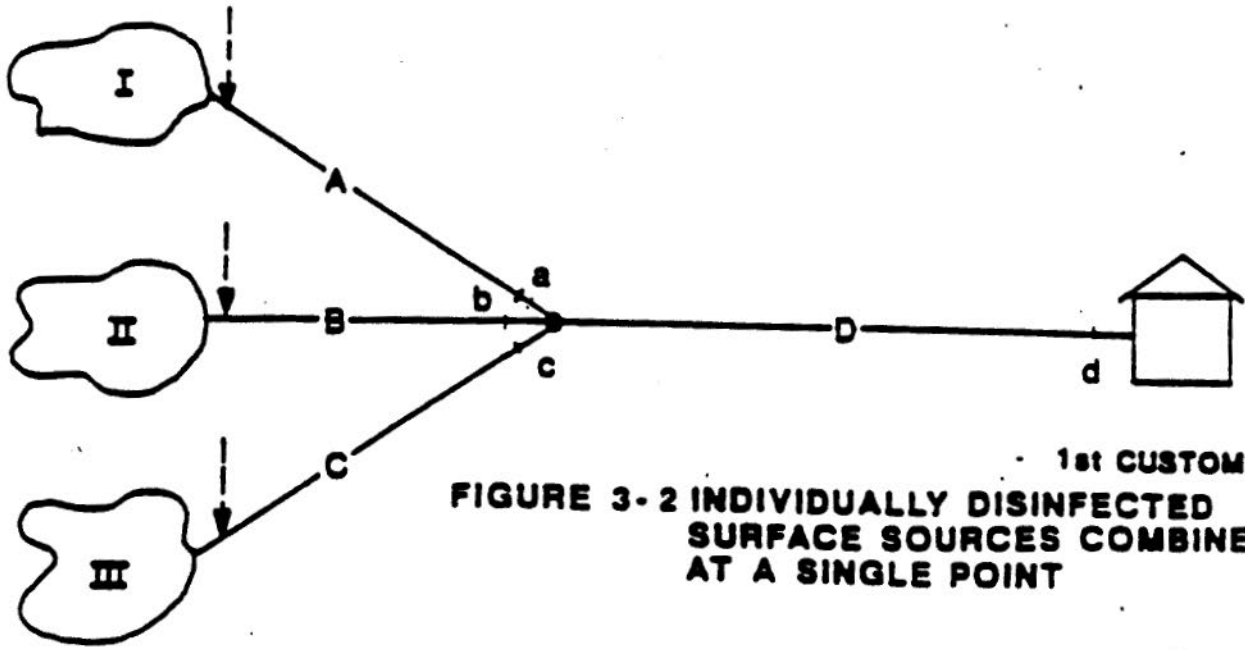

FIGURE 3-2 INDIVIDUALLY DISINFECTED SURFACE SOURCES COMBINED AT A SINGLE POINT

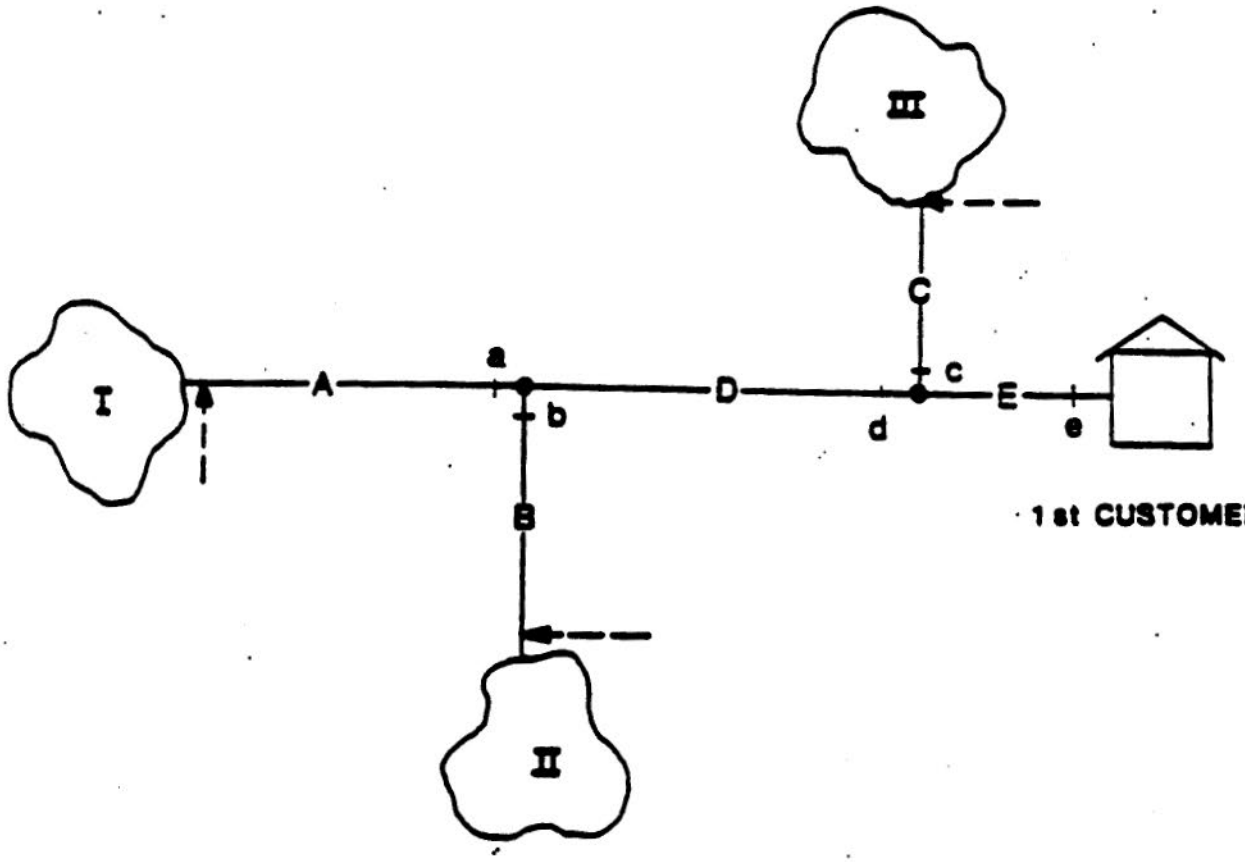

DISINFECTANT APPLICATION

COMBINATION POINT

SAMPLING POINTS

FIGURE 3-3 MULTIPLE COMBINATION POINTS FOR INDIVIDUALLY DISINFECTED SURFACE SOURCES

the surface water with ground water to reduce coliform levels may obscure the indication of such possible effects. Thus, EPA does not recommend blending to reduce coliform levels in the source water. Furthermore, EPA does not recommend blending to reduce turbidity levels in cases where elevated fecal contamination may be masked.

Ongoing monitoring is required to ensure that these requirements are continually met. The samples may be analyzed using either the multiple tube fermentation method or the membrane filter test (MF) as described in the 16th Edition of Standard Methods.

Sampling Frequency

Minimum sampling frequencies are as follows:

Population Served	Coliform Samples/Week
≤500	1
501-3,300	2
3,301-10,000	3
10,001-25,000	4
>25,000	5

Grab samples must be taken on different days. In addition, one sample must be taken every day during which the turbidity exceeds 1 NTU, unless the Primacy Agency determines that the system, for logistical reasons outside the system's control, cannot have the sample analyzed within 30 hours of collection. If taken, these samples count towards the weekly sampling requirement. Also, under the Total Coliform Rule, systems must take one coliform sample in the distribution system near the first service connection within 24 hours after a source water turbidity measurement exceeds 1 NTU. This measurement must be included in the total coliform compliance determination. The purpose of these requirements is to ensure that the monitoring occurs during worst case conditions.

The initial evaluation of the source water quality is based on the data from the previous 6 months. After the initial evaluation, systems must continue to conduct sampling each month to demonstrate compliance with the source water quality criteria on an ongoing basis. If the criterion has not been met, the system must filter.

Use of Historical Data Base

Some systems may already monitor their source water for total and/or fecal coliform concentration. The resulting historical data base may be sufficient for the Primacy Agency to make the initial determination of whether the system meets the source water quality criteria. The historical data base is considered sufficient for making this determination if:

- The raw water sampling location is upstream of the point of disinfectant application as previously defined.
- The monthly samples represent at least the minimum sampling frequency previously mentioned.
- The sampling period covers at least the previous six months.

3.1.2 Turbidity Levels: To avoid filtration, the turbidity of the water prior to disinfection cannot exceed 5 NTU, on an ongoing basis, based on grab samples collected every four hours (or more frequently) that the system is in operation. A system may substitute continuous turbidity monitoring for grab sample monitoring if it validates such measurements for accuracy with grab sample measurements on a regular basis, as specified by the Primacy Agency.[1] If a public water system uses continuous monitoring, it must use turbidity values recorded every four hours (or some shorter regular time interval) to determine whether it meets the turbidity limit for raw water. A system occasionally may exceed the 5 NTU limit and still avoid filtration as long as (a) the Primacy Agency determines that each event occurred because of unusual or unpredictable circumstances and (b) as a result of this event, there have not been more than two such events in the past twelve months the system served water to the public or more than five such events in the past 120 months the system

---

[1] Validation should be performed at least twice a week based on the procedure outlined in Part 214A in the 16th Edition of Standard Methods. Although the 17th Edition is available, the 16th Edition is that which is referred to in the rule. Improper installation of continuous monitors may allow for air bubbles to enter the monitor resulting in false turbidity spikes. To avoid air bubbles reaching the turbidimeter, the sample tap should be installed below the center line of the pipe and an air release valve may be included on the sample line.

served water to the public. An "event" is defined as a series of consecutive days in which at least one turbidity measurement each day exceeds 5 NTU.

It is important to note that every event, i.e., exceedance of the 5 NTU limit, regardless of whether the system must filter as a consequence, constitutes a violation of a treatment technique requirement. For example, if the turbidity exceeded 5 NTU in at least one measurement each day for three consecutive days, this would constitute one event and one treatment technique violation. If this was the third event in the past 12 months the system served water to the public, or the sixth event in the past 120 months the system had served water to the public, the system would also be required to install filtration. In all cases, the system must inform the Primacy Agency when the turbidity exceeds 5 NTU as soon as possible, but no later than the end of the next business day.

The Primacy Agency should evaluate additional data from the utility to determine the significance of the event with respect to the potential health risk to the community and determine whether a boil water notice is necessary. The additional data may include raw water fecal coliform levels, duration and magnitude of the turbidity excursion, nature of the turbidity (organic or inorganic), disinfectant residual entering the system during the excursion and/or coliform levels in the distribution system following the excursion. Boil water notices are not required under the SWTR, they may be issued at the discretion of the Primacy Agency.

In order to determine if the periods with turbidity greater than 5 NTU are unusual or unpredictable, it is recommended that in addition to the historical turbidity data, the water purveyor should collect and provide to the Primacy Agency current and historical information on flows, reservoir water levels, climatological conditions, and any other information that the Primacy Agency deems relevant. The Primacy Agency will then evaluate this information to determine if the event was unusual or unpredictable. Examples of unusual or unpredictable events include hurricanes, floods and earthquakes. High turbidity events may be avoided by:

- Use of an alternate source which is not a surface water and does not have to meet the requirements of the SWTR.

- Use of an alternate source which is not a surface water and does not have to meet the requirements of the SWTR.
- Use of an alternate source which is a surface water and which does meet the requirements of the SWTR.
- Utilization of stored water to supply the community until the source water quality meets the criteria.

3.2 Disinfection Criteria

3.2.1 Inactivation Requirements

To avoid filtration, a system must demonstrate that it maintains disinfection conditions which inactivate 99.9 percent of Giardia cysts and 99.99 percent of viruses every day of operation except any one day each month. If the disinfection conditions provide less than these inactivations during more than one day of the month, the system is in violation of a treatment technique requirement. If the system incurs such a violation during any two months in the previous 12 months, the system must install filtration, unless one of the violations was caused by unusual and unpredictable circumstances as determined by the Primacy Agency. Systems with three or more violations in the previous 12 months must install filtration regardless of the cause of the violation. To demonstrate adequate inactivations, the system must monitor and record the disinfectant(s) used, disinfectant residual(s), disinfectant contact time(s), pH (for chlorine), and water temperature, and use these data to determine if it is meeting the minimum total inactivation requirements in the rule.

A number of disinfectants are available, including ozone, chlorine, chlorine dioxide and chloramines. The SWTR prescribes CT [C, residual disinfectant concentration (mg/L) x T, contact time (min)] levels for these disinfectants which will achieve different levels of inactivation under various conditions. The disinfectant(s) used to meet the inactivation requirements is identified as the primary disinfectant throughout the remainder of this document.

To determine compliance with the inactivation requirements, a system must calculate the CT value(s) for its disinfection conditions during peak hourly flow once each day that it is delivering water to its customers. For the purpose of calculating CT value, T is the time (in minutes) it

takes the water, during peak hourly flow, to move between the point of disinfectant application and a point where, C, residual disinfectant concentration is measured prior to the first customer. Residual disinfectant concentration is the concentration of the disinfectant (in mg/L) at a point before or at the first customer. Contact time in pipelines must be calculated based on plug flow (i.e., where all water moves homogeneously in time between two points) by dividing the internal volume of the pipeline by the peak hourly flow rate through that pipeline. Contact time within mixing basins, settling basins storage reservoirs, and any other tankage must be determined by tracer studies or an equivalent method as determined by the Primacy Agency. The contact time determined from tracer studies to be used for calculating CT is T_{10}. T_{10} is the detention time corresponding to the time for which 90 percent of the water has been in contact with at least the residual concentration, C. Guidance for determining contact times for basins is provided in Appendix C.

The first customer is the point at which finished water is first consumed. In many cases this will include the treatment plant itself. This definition of first customer pertaining to the point of first consumption assures that the water has received the required disinfection to provide protection from microorganisms for all consumers. Peak hourly flow should be considered as the greatest volume of water passing through the system during any one hour in a consecutive 24 hour period. Thus, it is not meant to be the absolute peak flow occurring at any instant during the day.

Systems with only one point of disinfectant application may determine the total inactivation based on one point of residual measurement prior to the first customer, or on a profile of the residual concentration after the point of disinfectant application. Methods of disinfection measurement are presented in Appendix D. The residual profile and the total inactivation is calculated as follows:

- Measure the disinfectant residual, C, at any number of points within the treatment train.

- Determine the travel time, T, between the point of disinfectant application and the point where C is measured for the first section. For subsequent measurements of "C," T is the

time it takes for water to move from the previous "C" measurement point to this point of measurement.

- Calculate CT for each point of residual measurement (CT_{calc}).
- Determine the inactivation ratio ($CT_{calc}/CT_{99.9}$) for each section.[2]
- Sum the inactivation ratios for each section, i.e. $C_1T_1/CT_{99.9} + C_2T_2/CT_{99.9} + C_nT_n/CT_{99.9}$ to determine the total inactivation ratio.

If the total inactivation ratio (sum ($CT_{calc}/CT_{99.9}$)) is equal to or greater than 1.0, the system provides greater than 99.9 percent inactivation of Giardia cysts), and the system meets the disinfection performance requirement. Further explanation of CT calculations is presented in Section 3.2.2.

Systems need only calculate one CT (CT_{calc}) each day, for a point at or prior to the first customer; alternatively they have the option of calculating numerous CTs after the point of disinfectant application but prior to the first customer to determine the inactivation ratio. Profiling the residual gives credit for the higher residuals which exist after the disinfectant is applied but before the first customer. Profiling the residual may not be necessary if one CT is calculated (CT_{calc}), and this exceeds the applicable $CT_{99.9}$. In this case, the system is meeting the disinfection performance requirement. For systems with a very low oxidant demand in the water and long contact times, this approach may be the most practical to use.

For systems with multiple points of disinfectant application, such as ozone followed by chlorine, or chlorine applied at two different points in the treatment train, the inactivation ratio of each disinfectant section prior to the first customer is used to determine the total inactivation ratio. The disinfectant residual of each disinfection

---

[2] $CT_{99.9}$ is the CT value required to achieve 99.9 percent or 3-log Giardia cyst inactivation for the conditions of pH, temperature and residual concentration for each section. A section is the portion of the system with a measurable contact time between two points of disinfection application or residual monitoring.

section and the corresponding contact time must be measured at some point prior to the subsequent disinfection application point(s) to determine the inactivation ratio for each section, and whether the total inactivation ratio is 1.0 or more. For example, if the first disinfection section provided an inactivation ratio of 2/3 (or 99 percent inactivation) and the second disinfection section provided an inactivation ratio of 1/3 (or 90 percent inactivation), the total inactivation ratio would equal 1.0 (2/3 + 1/3 = 1) indicating that 99.9% inactivation was provided and the disinfection requirements are met. Further explanation of the determination of total inactivation provided is contained in Section 3.2.2.

Maintaining Inactivation Level

The SWTR establishes CTs for chlorine, chlorine dioxide, ozone and chloramines which will achieve 3-log inactivations of Giardia cysts and at least 4-log inactivation of viruses. Appendix E presents CTs for these and other log inactivations. A system must demonstrate compliance with the inactivation requirements based on conditions occurring during peak hourly flow. Since a system generally can only identify peak hourly flow after it has occurred, hourly residual measurements during the day are suggested. If the sampling points are remote, or manpower is limited and collection of hourly grab samples is impractical, continuous monitors may be installed. In cases where continuous monitors are impractical, the Primacy Agency may establish an acceptable monitoring program on a case-by-case basis; where possible this should be based on historical flow patterns. Measurements for the hour of peak flow can then be used in calculating CT. The pH (for systems using chlorine) and temperature must be determined daily for each disinfection sequence prior to the first customer.

Since the system's inactivation is determined during peak hourly flow, the disinfectant dosage applied to meet CT requirements may not be necessary during lower flow conditions. Continuing to apply a disinfectant dosage based on the peak hourly flow could possibly result in increased levels of disinfectant by-products, including TTHMs and increased costs. Under lower flow conditions, a higher contact time is available and a lower residual may provide the CT needed to meet the inactivation requirements. The system may therefore choose to adjust the

disinfectant dose with changes in flow. The system should, however, maintain a disinfectant residual which will still provide a 3-log inactivation of Giardia cysts and a 4-log inactivation of viruses at non-peak hourly flows. The system should therefore evaluate the residual needed to provide the required inactivation under different flow conditions and set the dosage accordingly. The following provides an example of maintaining the required inactivation.

Example

A 5 mgd non-filtering system disinfecting with free chlorine at one point of application, has a contact time of 165 minutes during a peak flow of 5 MGD. The flow varies from 1 to 5 MGD. The pH and temperatures of the water are 7 and 5 C, respectively. At a residual of 0.9 mg/L, a CT of 148 mg/L-min is required to meet the disinfection requirements. The CT for 0.9 mg/L residual is determined by straight line interpolation between 0.8 mg/L and 1.0 mg/L residuals. Under lower flow conditions, the available contact time is longer and a lower residual would provide the required disinfection. Based on existing contact time and using the appropriate CT tables (in this case, Table E-2) in Appendix E for a 3-log Giardia cyst inactivation, the required disinfection would be provided by maintaining the following chlorine residuals for the indicated flow:

Flow (MGD)	Contact Time (min)	CT (mg/L-min) Required	Free Chlorine Residual (mg/L)
5	165	148	0.9
4	206	145	0.7
3	275	143	0.6
2	412	139	0.4
1	825	139	0.2

This table indicates the variation of residuals needed for the system to provide the required inactivation. For chlorine, the disinfectant residual cannot be adjusted in direct proportion to the flow because the CT needed for disinfection is dependent upon the residual. Since it is not practical to continuously adjust the residual and, since a disinfection level for a 3-log Giardia cyst inactivation must be maintained under all flow conditions, it is suggested that the flow variation at the utility be divided into ranges and the residual needed at

the higher flow rate of each range be maintained for all flows within the range to ensure the required disinfection. The following flow ranges and residuals are suggested for the system:

Flow Range (MGD)	Free Chlorine Residual (mg/L)
1 - 1.9	0.4
2 - 3.9	0.6
4 - 5	0.9

By maintaining these residuals, the utility is ensuring the provision of the required disinfection while minimizing the disinfectant application, which should result in lower disinfection by-products and costs.

Although these residuals will meet the inactivation requirements, maintaining a residual in the distribution system must also be considered. If no other point of disinfection exists prior to the distribution system, the residual for disinfection must be maintained at a level which will also provide a residual throughout the distribution system. The complete range of flows occurring at the plant should be evaluated for determining the required residual. A utility may establish the residual requirements for as many flow ranges as is practical.

The CTs determined from the daily system data should be compared to the values in the table for the pH and temperature of the water, to determine if the required CT has been achieved. Only the analytical methods prescribed in the SWTR, or otherwise approved by EPA, may be used for measuring disinfectant residuals. Methods prescribed in the SWTR are listed in Appendix D. The Appendix also contains a paper which describes monitoring methods for various disinfectants and conditions.

The Primacy Agency should make periodic checks on its utilities to assure that they are maintaining adequate disinfection at non-peak flow conditions.

Meeting the Inactivation Requirement Using Free Chlorine

When free chlorine is used as a disinfectant, the efficiency of inactivation is influenced by the temperature and pH of the water. Thus, the measurement of the temperature and pH for the determination of the CT is required. The SWTR provides the CT requirements for free chlorine at

various temperatures and pHs which may occur in a source water. These values are presented in Table E-1 through Table E-7 in Appendix E. The basis for these values is discussed in Appendix F. For free chlorine, a 3-log inactivation of Giardia cysts will provide greater than a 4-log inactivation of viruses, thus meeting the SWTR inactivation requirements.

As indicated in Table E-2, a raw water temperature of 5 C, a pH of 7.0, and a residual chlorine concentration of 1.4 mg/L require a CT of 155 mg/L-min to provide a 3-log inactivation of Giardia cysts. Therefore, to meet the inactivation requirement under these conditions with one point of residual measurement, a contact time of 111 minutes [(155 mg/L-min)/ (1.4 mg/L)] prior to the first customer would be required.

Meeting the Inactivation Requirement Using Chloramines

Chloramines are a much weaker oxidant than free chlorine, chlorine dioxide and ozone. The CT values for chloramines presented in Table E-12 are based on disinfection studies using preformed chloramines and in vitro excystation of Giardia muris cysts (Rubin, 1988). No safety factor was applied to the laboratory data on which the CT values were based since EPA believes that chloramination, conducted in the field, is more effective than using preformed chloramines.

In the laboratory testing using preformed chloramines, ammonia and chlorine were reacted to form chloramines before the addition of the microorganisms. Under field conditions, chlorine is usually added first followed by ammonia addition further downstream. Also, even after the addition of ammonia, some free chlorine residual may persist for a period of time. Therefore, free chlorine is present for a period of time prior to the formation of chloramines. Since this free chlorine contact time is not duplicated in the laboratory when testing with preformed chloramines, the CT values obtained by such tests may provide conservative values when compared to those CTs actually obtained in the field with chlorine applied before ammonia. Also, other factors such as mixing in the field (versus no mixing in the laboratory) may contribute to disinfection effectiveness. For these reasons, systems using chloramines for disinfection may demonstrate effective disinfection in accordance with the procedure in Appendix G in lieu of meeting the CT values in Appendix E.

If a system uses chloramines and is able to achieve the CT values for 99.9 percent inactivation of Giardia cysts, it is not always appropriate to assume that 99.99 percent or greater inactivation of viruses was also achieved. New data indicate that Hepatitis A virus is more sensitive than Giardia cysts to inactivation by preformed chloramines (Sobsey, 1988). The CT values required to achieve 99.99 percent inactivation of Hepatitis A with preformed chloramines are lower than those needed to achieve 99.9 percent inactivation of Giardia cysts. These data contrast with other data which indicate that rotavirus is more resistant than Giardia cysts to preformed chloramines (Hoff, 1986).[3] However, rotavirus is very sensitive to inactivation by free chlorine, much more so than Hepatitis A (Hoff, 1986;[4] Sobsey, 1988). If chlorine is applied prior to ammonia, the short term presence of free chlorine would be expected to provide at least 99.99 percent inactivation of rotavirus prior to the addition of ammonia and subsequent formation of chloramines. Thus, EPA believes it is appropriate to use Hepatitis A data, in lieu of rotavirus data, as a surrogate for defining minimum CT values for inactivation of viruses by chloramines, under the condition that chlorine is added to the water prior to the addition of ammonia.

A system which achieves a 99.9 percent or greater inactivation of Giardia cysts with chloramines can be considered to achieve at least 99.99 percent inactivation of viruses, provided that chlorine is added to the water prior to the addition of ammonia. Table E-13 provides CT values for achieving different levels of virus inactivation. However, if ammonia is added first, the CT values in the SWTR for achieving 99.9 percent inactivation of Giardia cysts cannot be considered adequate for achieving 99.99 percent inactivation of viruses.

Under such cases of chloramine production, the SWTR requires systems to demonstrate through on-site challenge studies, that the system is

---

[3] CT values in excess of 5,000 are required for a 4-log inactivation of rotavirus by preformed chloramines but no minimum CT values have been determined.

[4] CT values ranging from 0.025 to 2.2 achieve 99 percent inactivation of rotavirus by free chlorine at pH = 6 -10 and 4 - 5°C (Hoff, 1986).

achieving at least a 4-log inactivation of viruses. Guidance for conducting such studies is given in Appendix G. Once conditions for achieving a 4-log inactivation of viruses has been established, the Primacy Agency should require systems to report their disinfection operating conditions on an ongoing basis. These conditions should verify that the system is operating at CT values in excess of that needed to achieve a 4-log virus inactivation or 3-log Giardia cyst inactivation, whichever is higher.

Meeting the Inactivation Requirement Using Chlorine Dioxide

Under the SWTR, the CT values for the inactivation of Giardia cysts using chlorine dioxide are independent of pH. Under the SWTR the only parameter affecting the CT requirements associated with the use of chlorine dioxide is temperature. Table E-8 in Appendix E presents the chlorine dioxide CT values required for the inactivation of Giardia cysts at different temperatures. The basis for these CT values is discussed in Appendix F. Systems which use chlorine dioxide are not required to measure the pH of the disinfected water for the calculation of CT. For chlorine dioxide, a 3-log inactivation of Giardia cysts will generally result in greater than a 4-log virus inactivation, and assure meeting the SWTR inactivation requirements. However, for chlorine dioxide, unlike chlorine where this relationship always holds true, at certain temperatures, the 4-log virus CTs may be higher than the 3-log Giardia cyst CTs.

The Primacy Agency may allow lower CT values than those specified in the SWTR for individual systems based on information provided by the system. Protocols for demonstrating effective disinfection at lower CT values is provided in Appendix G.

As indicated in Tables E-8 and E-9, the CT requirements for chlorine dioxide are substantially lower than those required for free chlorine. However, chlorine dioxide is not as stable as free chlorine or chloramines in a water system and may not be capable of providing the required disinfectant residual throughout the distribution system. In addition, out of concern for toxicological effects, EPA's current guideline is that the sum of the chlorine dioxide, chlorate and chlorite residuals, be less than 1.0 mg/L at all consumer taps. This guideline may be lowered as more health effects data become available. These concerns further reduce the

feasibility of using chlorine dioxide as a secondary disinfectant for distribution systems. Therefore, the use of chlorine dioxide as a primary disinfectant may result in the need for the application of a secondary disinfectant, such as chlorine or chloramines, that will persist in the distribution system and provide the required residual protection.

Meeting the Inactivation Requirement Using Ozone

Another disinfectant to inactivate Giardia cysts and viruses is ozone. As with chlorine dioxide, under the SWTR, the CT values for ozone are independent of pH. Tables E-10 and E-11 present the CT requirements for ozone at different source water temperatures. The basis for the CT values for ozone is given in Appendix F. As for free chlorine, a 3-log Giardia cyst inactivation with ozone will result in greater than a 4-log virus inactivation. Unlike chlorine, for cases where only a 1-log or lower Giardia inactivation is needed with ozone, the CT values for virus inactivation may be higher than the CT for Giardia. The Primacy Agency may allow lower CT values for individual systems based on information provided by the system that demonstrates that CT values lower than those specified in the rule achieve the same inactivation efficiencies (see Appendix G).

Ozone is extremely reactive and dissipates quickly after application. Therefore, a residual[5] can only be expected to persist a short time

---

[5] The residual must be measured using the Indigo Trisulfonate Method (Bader & Hoigne, 1981) or automated methods which are calibrated in reference to the results obtained by the Indigo Trisulfonate method, on a regular basis as determined by the Primacy Agency. The Indigo Trisulfonate method is included in the 17th Edition of Standard Methods. This method is preferable to current standard methods because of the selectivity of the Indigo Trisulfonate indicaor in the presence of most interferences found in ozonated waters. The ozone degrades an acidic solution of indigo trisulfonate in a 1:1 proportion. The decrease in absorbance is linear with increasing ozone concentrations over a wide range. Malonic acid can be added to block interference from chlorine. Interference from permanganate, produced by the ozonation of manganese, is corrected by running a blank in which ozone is destroyed prior to addition of the indigo reagent. The samples can be analyzed using a spectrophotometer at a 600 nm wavelength which can detect residuals as low as 2 ug/L or a visual color comparison method which can measure down to 10 ug/L ozone. Although currently available monitoring probes do not use the Indigo Trisulfonate Method, they can

after application. In addition, the application of ozone to water is dependent on mass transfer. For these reasons, the method of CT determination used for the other disinfectants is impractical for ozone. The CT_{calc} must be determined for the ozone contactor alone. The contactor will have some portions where the ozone is applied and other portions of the contactor where ozone is no longer applied, which are referred to as the reactive flow chambers.

For many ozone contactors, the residual in the contactor will vary in accordance with the method and rate of application, the residual will be nonuniform and is likely to be zero in a portion of the contactor. As previously indicated, the CT value is based on the presence of a known residual during a specific contact time. Thus disinfection credit is only provided for the time when a residual is present. Besides the nonuniformity of the residual, monitoring the residual will be difficult because of the ozone's high reactivity and the closed design of the contactors.

In addition to the difficulty in determining the ozone residual for the CT calculation, the contact time will vary between basins depending on their flow configuration. Several types of devices are available for adding ozone to water including porous diffusers, submerged turbines, injector, packed towers and static mixers. Each type of device can be used in either single or multiple chamber contactors. The flow through a single chamber turbine contactor will approximate a completely mixed unit, while flow through a single chamber diffused contactor, or a multiple chamber diffused contactor, will more closely represent plug flow. This variation in flow in different contactors makes the use of T_{10} inappropriate for some contactors.

The differences between ozone contactors and other disinfection systems resulted in the development of several approaches for determining the inactivation provided by ozone, including:

- Evaluation of C and T
- Segregated Flow Analysis (SFA)
- Continuously Stirred Tank Reactor (CSTR)
- Site Specific Evaluation

---

be calibrated via this method.

The method which is appropriate for a paricular system will depend on system configuration and the required level of inactivation. Another significant difference is that ozone may be applied to provide only a portion of the overall 3-log Giardia cyst and 4-log virus inactivation with the remainder of the inactivation provided by another disinfectant. Appendix O provides details for selecting the appropriate method of evaluation for specific conditions.

The evaluation of C and T involves separate determination of the ozone residual concentration, C, and the contact time, T, in the contactor. C can be determined for individual chambers of a contactor based on the residual measured at several points throughout the chamber, or at the exit of the chamber. The T value can be determined through a tracer study or an equivalent method as approved by the Primacy Agency with air or oxygen applied during testing, using the same feed gas rate as used during operation. Appendix O provides details for the CT approach.

SFA is based on the results of a tracer study used in conjunction with the measured ozone residual to determine the survival of microorganisms exiting the contactor. The survival corresponds to a certain inactivation. Guidelines for this approach are included in Appendix O.

The CSTR approach is applicable for contactors which have a high degree of mixing. Experience has shown that for contactors such as turbine units, the ozone residual is generally uniform throughout the contactor. The ozone residual measured at the exit if the contactor is used in an equation for CSTRs to determine the inactivation provided. Appendix O provides details for conducting CSTR analysis.

Site specific evaluations may include:

- Measurement of an observable parameter to correlate with C
- Mathematical model for disinfection efficiency
- Microbial indicator studies for disinfection efficiency

to more closely determine the inactivation provided in a particular system. Appendix O provides details for applying site specific evaluations.

Summary

Many systems which do not provide filtration will have difficulty in providing the contact time necessary to satisfy the inactivation requirements prior to the first customer. For example, a system using free chlorine at a water temperature of 5 C, a pH of 7.0 and a chlorine residual of 1.4 mg/L would require 111 minutes of contact time to meet the inactivation requirement. Potential options for these systems include:

- Installation of storage facilities to provide the required contact time under maximum flow conditions.
- Use of an alternate primary disinfectant such as ozone or chlorine dioxide which has CT values lower than those required for free chlorine for the required inactivation.

For some systems, the difficulty in obtaining the required inactivation may only be a seasonal problem. A system that has raw water temperatures which reach 20 C during the summer months at a pH of 7.0, may have sufficient contact time to meet the CT of 56 mg/L-min (Table E-5) at a chlorine concentration of 1 mg/L. However, assuming the same pH and chlorine concentration, it may not have sufficient contact time to meet the CT requirement at 5 C, 149 mg/L-min (Table E-2), or at 0.5 C, 210 mg/L-min (Table E-1). Under those conditions, a system could choose to use ozone or chlorine dioxide on a seasonal basis, since they are stronger disinfectants requiring a shorter contact time.

As indicated in Table E-12, the CT values for chloramines may be impractical to attain for most systems. Systems which currently utilize chloramines as a primary disinfectant may need to use either free chlorine, chlorine dioxide or ozone in order to provide the required disinfection. However, systems using chloramines as a primary disinfectant may chose to demonstrate the adequacy of the disinfection. Appendix G presents a method for making this demonstration.

Meeting the Inactivation Requirement Using Alternate Disinfectants

For systems using disinfectants other than chlorine, chloramines, chlorine dioxide, or ozone, the effectiveness of the disinfectant can be demonstrated using the protocol contained in Appendix G. The protocol in Appendix G.3 for batch testing should be followed for any disinfectant

which can be prepared in an aqueous solution and will be stable throughout the testing. For disinfectants which are not stable, the pilot study protocol outlined in Appendix G.4 should be followed.

3.2.2 Determination of Overall Inactivation for Residual Profile, Multiple Disinfectants and Multiple Sources

For systems which apply disinfectant(s) at more than one point, or choose to profile the residual from one point of application, the total inactivation is the sum of the inactivation ratios between each of the points of disinfection or between each of the residual monitoring points, respectively. The portion of the system with a measurable contact time between two points of disinfection application or residual monitoring will be referred to as a section. The calculated CT (CT_{calc}) for each section is determined daily.

The CT needed to fulfill the disinfection requirements is $CT_{99.9}$, corresponding to a 3-log inactivation of Giardia cysts and greater than or equal to a 4-log inactivation of viruses (except for chloramines and sometimes chlorine dioxide as explained in Section 3.2.1). The inactivation ratio for each section is represented by $CT_{calc}/CT_{99.9}$, as explained in Section 3.2.1, and indicates the portion of the required inactivation provided by the section. The sum of the inactivation ratios from each section can be used to determine the overall level of disinfection provided. Assuming inactivation is a first order reaction, the inactivation ratio corresponds to log and percent inactivations as follows:

$CT_{calc}/CT_{99.9}$		Log Inactivation		Percent Inactivation
0.17	=	0.5 log	=	68 %
0.33	=	1 log	=	90%
0.50	=	1.5 log	=	96.8%
0.67	=	2 log	=	99%
0.83	=	2.5 log	=	99.7%
1.00	=	3 log	=	99.9%
1.33	=	4 log	=	99.99%

$CT_{99.9}$ can be determined for each section by referring to Tables E-1 through E-13 in Appendix E, using the pH (when chlorine is the disinfectant) and temperatures of the water for the respective sections. These tables present the log inactivation of Giardia cysts and viruses achieved by CTs at various water temperatures and pHs.

Log inactivations are additive, so:

0.5 Log + 1.0 Log = 1.5 Log or

$0.17CT_{99.9} + 0.33CT_{99.9} = 0.5CT_{99.9}$

If the sum of the inactivation ratios is greater than or equal to one, the required 3-log inactivation of Giardia cysts has been achieved. An inactivation ratio of at least 1.0 is needed to demonstrate compliance with the Giardia cyst inactivation requirements for unfiltered systems.

The total log inactivation can be determined by multiplying the sum of the inactivation ratios (sum $(CT_{calc}/CT_{99.9})$), by three. The total log inactivation can be determined in this way because $CT_{99.9}$ is equivalent to a 3-log inactivation. The total percent inactivation can be determined as follows:

$$y = \frac{100}{10^x} - \frac{100}{} \qquad \text{Equation (1)}$$

where: y = % inactivation

x = log inactivation

For example:

$x = 3.0$ log inactivation

$$y = 100 - \frac{100}{10^{3.0}} = 99.9\ \%\ \text{inactivation}$$

As explained in Section 3.2.1, the CT_{calc} determined for each disinfection section is the product of the disinfectant residual in mg/L and the detention time in minutes through the section at peak hourly flow. However, for many water systems, peak hourly flow will not necessarily occur simultaneously in all sections. The extent to which the occurrence of peak hourly flow will vary between sections of the system depends on

the characteristics of an individual system including its size, storage capacity within the distribution system, the number of sources, and hydraulic capacities between different sections. In order to simplify the determination of peak hourly flow for the system, it should be taken as peak hourly flow in the last section of the system prior to the first customer.

The CT values for all the sections should be calculated for the flow and the residuals occurring during the hour of peak flow in the last section. The most accurate way to determine the flow in a particular section is through the use of a flow meter. However, some sections of the system may not have a flow meter. The following guidelines can be used to determine the flow to be used in calculating CT:

- For sections which do not have meters, the flow should be assumed to be the higher of the two flows occurring in the closest upstream and downstream sections with meters.

- In cases where a section contains a pipeline and a basin with the flow meter located prior to the basin, the metered flow does not represent the discharge rate of the basin. The difference in inlet and discharge rates from a basin will impact the water level in the basin. As explained in Appendix C, falling water levels will result in lower T_{10} values.

    - To assure that the detention time of a basin is not overestimated, the discharge flow from a basin should be used in lieu of the influent flow, unless the influent flow is higher.

    - To estimate the discharge flow from a basin the closest flow meter downstream of the basin should be used.

The following example presents the determination of the total percent inactivation for multiple points of disinfection, with variation in flow between sections.

Example

A community of 6,000 people obtains its water supply from a lake which is 10 miles from the city limits. Two 0.2 MG storage tanks are located along the 12-inch transmission line to the city. The water is disinfected with chlorine dioxide at the exit from the lake and with chlorine at the discharge from the first and second storage tanks. The

average water demand of the community is 1 MGD with a peak hourly demand of approximately 2 MGD. For the calculations of the overall percent inactivation, the supply system is divided into three sections as shown on Figure 3-1.

Section 1 - from the lake to the discharge from the first storage tank,

Section 2 - from the discharge from the first storage tank to the discharge from the second tank

Section 3 - from the discharge of the second storage tank to the first customer

The overall inactivation is computed daily for the peak hourly flow conditions. Sections 1 and 3 contain flow meters to monitor the water being withdrawn from the lake and the water being delivered to the distribution system as shown on Figure 3-1. On the day of this example calculation, the peak hourly flow in section 3 was 2 MGD. During this hour, water was being withdrawn from the lake at a rate of 1.5 mgd. Considering the placement of flow meters, the flow of 2 mgd measured in section 3 should be used for calculating CT for that section. Since section 2 does not have a flow meter, the meter in section 3 serves as a measure of the discharge from storage tank 2 and should be the flow used in the calculation of CT for section 2. The flow meter in section 1 records the flow through the transmission main which should be used in the calculation of CT for the pipeline. However, this meter does not represent the discharge from storage tank 1. Since the water is being pumped to the distribution system at a higher rate than the flow entering storage tank 1, the flow of 2 mgd measured in section 3 should be used for calculating the CT for storage tank 1.

The pH, temperature and disinfectant residual of the water were measured at the end of each section just prior to the next point of disinfection and the first customer during the hour of peak flow. The water travels through the 12-inch transmission main at 177 ft/min at

1.5 MGD.[6] The detention times of the storage tanks were read off the T_{10} vs. Q plots generated from tracer studies conducted on the storage tanks (see Appendix C). The data for the inactivation calculation are as follows:

	Section 1	Section 2	Section 3
length of pipe (ft)	15,840	26,400	10,560
flow (mgd)			
pipe	1.5	2.0	2.0
tank	2.0	2.0	
contact time (min)			
pipe	89	111	45
tank	116	114	0
total	205	225	45
disinfectant	chlorine dioxide	chlorine	chlorine
residual (mg/L)	0.1	0.2	0.4
temperature (C)	5	5	5
pH	8	8	8

This information is then used in conjunction with the $CT_{99.9}$ values in Appendix E to determine the ($CT_{calc}/CT_{99.9}$) in each section as follows:

Section 1 - Chlorine dioxide

CT_{calc} = 0.1 mg/L x 105 minutes = 20.5 mg/L-min

From Table E-8 at a temperature of 5 C and pH = 8, $CT_{99.9}$ is 26 mg/L-min

$$CT_{calc}/CT_{99.9} = \frac{20.5 \text{ mg/L-min}}{26 \text{ mg/L-min}} = 0.79$$

Section 2 - Chlorine

CT_{calc} = 0.2 mg/L x 225 minutes = 45 mg/L-min

From Table E-2 at a temperature of 5 C and pH = 8, $CT_{99.9}$ is 198 mg/L-min

$$CT_{calc}/CT_{99.9} = \frac{45 \text{ mg/L-min}}{198 \text{ mg/L-min}} = 0.23$$

---

[6] $\frac{Q}{A} = \frac{1.5 \times 10^6 \text{ gal/day}}{(1 \text{ ft}^2/4)} \times \frac{1 \text{ ft}^3}{7.48 \text{ gal}} \times \frac{\text{day}}{1440 \text{ min}} = 177 \text{ ft/min}$

Section 3 - Chlorine

CT_{calc} = 0.4 mg/L-min x 45 min = 18 mg/L-min

From Table E-2 at a temperature of 5 C and pH = 8,
$CT_{99.9}$ is 198 mg/L-min

$$CT_{calc}/CT_{99.9} = \frac{18 \text{ mg/L-min}}{198 \text{ mg/L-min}} = 0.09$$

The sum of $CT_{calc}/CT_{99.9}$ is equal to 1.11, which is greater than 1, therefore, the system meets the requirements of providing a 3-log inactivation of Giardia cysts. The log inactivation provided is:

$$x = 3 \times \frac{CT_{calc}}{CT_{99.9}} = 3 \times 1.11 = 3.33$$

The percent inactivation can be determined using equation 1.

$$y = 100 - \frac{100}{10^{3.33}} = 100 - \frac{100}{2,138} = 100 - 0.05 = 99.95\% \text{ inactivation}$$

The system meets the requirement of providing a 99.9 percent inactivation of Giardia cysts.

The SWTR also requires that the public be provided with protection from Legionella as well as Giardia cysts and viruses. Inactivation levels have not been set for Legionella because the required inactivation of Giardia cysts will provide protection from Legionella.[7] However, this level of disinfection cannot assure that all Legionella will be inactivated and that no recontamination or regrowth in recirculating hot water systems of buildings or cooling systems will occur. Appendix B provides

---

[7] Kuchta et al. (1983) reported a maximum CT requirement of 22.5 for a 99 percent inactivation of Legionella in a 21 C tap water at a pH of 7.6-8.0 when using free chlorine. Using first order kinetics, a 99.9 percent inactivation requires a CT of 33.8. Table A-5 presents the CTs needed for free chlorine to achieve a 99.9 percent inactivation of Giardia cysts at 20 C. This table indicates that the CT required for a 3-log inactivation of Giardia at the temperature and pH of the Legionella test ranges from 67 to 108 depending on chlorine residual. These CT's are two to three times higher than that which is needed to achieve a 3 log inactivation of Legionella.

guidance for monitoring and treatment to control Legionella in institutional systems.

The above discussion pertains to a system with one source with sequential disinfection. Another system may blend more than one source, and disinfect one or more of the sources independently prior to blending. System conditions which may exist include:

- All the sources are combined at one point prior to supplying the community but one or more of the sources are disinfected prior to being combined, as shown on Figure 3-2.
- Each source is disinfected individually and enters the distribution system at a different point, as shown on Figure 3-3.

For all systems combining sources, the first step in determining the CT should be to determine the CT_{calc} provided from the point of blending closest to the first customer using the contact time and residual at peak hourly flow for that portion of the distribution system. This corresponds to section D on Figure 3-2 and section E on Figure 3-3. If the CT_{calc} for section D or E provides the required inactivation, no additional CT credit is needed and no further evaluation is required. However, if the CT for section D or E is not sufficient to achieve the required inactivation, then the inactivation ratio $(CT_{calc})/(CT_{99.9})$ should be determined for each section to determine the overall inactivation provided for each source. The total inactivation must be greater than or equal to one for all sources in order to comply with the requirements for 3-log inactivation of Giardia cysts.

On Figure 3-2, sections A, B, C and D contain sampling points a, b, c and d, respectively. The sum of the inactivation ratios for sections A+D, B+D and C+D must each be greater than or equal to one for the disinfection requirements to be met.

The total inactivation for each source on Figure 3-2 should be determined as follows:

Source I

- Determine CT_{calc} for sections A and D based on the residual measurements at sample points a and d, and the travel time

through each section under peak hourly flow conditions for the respective section.

- Determine $CT_{99.9}$ for the pH and temperature conditions in each section using the tables in Appendix E
- Calculate the inactivation ratios ($CT_{calc}/CT_{99.9}$) for sections A and D.
- Calculate the sum of the inactivation ratios for sections A and D to determine the total inactivation for source I.
- If the sum of the inactivation ratios is greater than or equal to 1.0, the system has provided the required 3-log Giardia cyst inactivation.

Source II

- Determine CT_{calc} for section B based on the residual measured at sample point b and the travel time through the section under peak hourly flow conditions.
- Determine $CT_{99.9}$ for section B for the pH and temperature conditions in the section using the appropriate tables in Appendix E.
- Calculate the inactivation ratio ($CT_{calc}/CT_{99.9}$) for section B.
- Add the inactivation ratios for sections B and D to determine the total inactivation for source II.
- If the sum of the inactivation ratios is greater than or equal to 1.0, the system has provided the required 3-log Giardia cyst inactivation for the source.

Source III

- Determine CT_{calc} for section C based on the residual measured at sample point c and the travel time through the section under peak hourly flow conditions.
- Determine $CT_{99.9}$ for section C for the pH and temperature conditions in the section using the appropriate tables in Appendix E.
- Calculate the inactivation ratio ($CT_{calc}/CT_{99.9}$) for section C.
- Add the inactivation ratios for sections C and D to determine the total inactivation for Source III.

- If the sum of the inactivation ratios is greater than or equal to 1.0, the system has provided the required 3-log Giardia cyst inactivation for the source.

The determination of the total inactivation for each source may require more calculations for systems such as that on Figure 3-3 than on Figure 3-2. On Figure 3-3 sections A, B, C, D, and E contain sampling points a, b, c, d, and e respectively. In order to minimize the calculations needed, the determination of the total inactivation should begin with the source closest to the first customer.

The total inactivation for each source on Figure 3-3 should be determined as follows:

Source III

- Determine CT_{calc} for sections C and E based on the residual measurement at sample points c and e and the detention time in each section under peak hourly flow conditions for the respective section.
- Determine $CT_{99.9}$ for the pH and temperature conditions in each section using the tables in Appendix E.
- Calculate the inactivation ratios ($CT_{calc}/CT_{99.9}$) for sections C and E.
- Calculate the sum of the inactivation ratios for sections C and E to determine the total inactivation for source III.
- If the sum of the inactivation ratios is greater than or equal to 1.0, the system has provided the required 3-log Giardia cyst inactivation for source III.

Source II

- Determine CT_{calc} for section D based on the residual measured at sample point d and the detention time through the section under peak hourly flow conditions.
- Determine $CT_{99.9}$ for section D for the pH and temperature conditions in the section using the appropriate tables in Appendix E.
- Calculate the inactivation ratio ($CT_{calc}/CT_{99.9}$) for section D.
- Add the inactivation ratios for sections D and E to determine the overall inactivation.

- If the sum of the inactivation ratios is greater than or equal to 1.0, the system has provided the required 3-log Giardia cyst inactivation for source II, as well as source I since the water from each of these sources are combined prior to sections D and E.

- If the total inactivation ratio for sections D and E is less than 1.0, additional calculations are needed. Proceed as follows for source II.

- Determine CT_{calc} for section B based on the residual measured at sample point b and the detention time through the section under peak hourly flow conditions.

- Determine $CT_{99.9}$ for section B for the pH and temperature conditions in the section using the appropriate tables in Appendix E.

- Calculate the inactivation ratio ($CT_{calc}/CT_{99.9}$) for section B.

- Add the inactivation ratios for sections B, D and E to determine the total inactivation for source II.

- If the sum of the inactivation ratios is greater than or equal to 1.0, the system has provided the required 3-log Giardia cyst inactivation for the source.

Source I

As noted in the determination of the inactivation provided for source II, if the sum of the inactivation ratios for sections D and E is greater than or equal to 1.0, the system has provided the required 3-log Giardia cyst inactivation. However, if this sum is less than 1.0 additional calculations will be needed to determine the overall inactivation provided for source I. The calculations are as follows:

Source I

- Determine CT_{calc} for section A based on the residual measured at sample point a and the detention time in the section under peak hourly flow conditions.

- Determine $CT_{99.9}$ for section A for the pH and temperature conditions in the section using the appropriate tables in Appendix E.

- Calculate the inactivation ratio ($CT_{calc}/CT_{99.9}$) for section A.

- Add the inactivation ratios for sections A, D, and E to determine the total inactivation for source I.

- If the sum of the inactivation ratios is greater than or equal to 1.0, the system has provided the required 3-log Giardia cyst inactivation for the source.

3.2.3 Demonstration of Maintaining a Residual

The SWTR establishes two requirements concerning the maintenance of a residual. The first requirement is to maintain a minimum residual of 0.2 mg/L entering the distribution system. The second is to maintain a detectable residual throughout the distribution system. The disinfectant used to meet these requirements is identified as the secondary disinfectant throughout the remainder of this document. These requirements are further explained in the following sections.

Maintaining a Residual Entering the Distribution System

To avoid filtration, the disinfectant residual in water entering the distribution system cannot be less than 0.2 mg/l for more than four hours, with one exception noted below. Systems serving more than 3,300 persons must monitor continuously. If there is a failure in the continuous monitoring equipment, the system may substitute grab sampling every four hours for up to five working days following the failure of the equipment. Systems serving 3,300 or fewer people may monitor continuously or take grab samples at the frequencies prescribed below:

System Size by Population	Samples/day*
≤500	1
501-1,000	2
1,001-2,500	3
2,501-3,300	4

*Samples cannot be taken at the same time.
The sampling intervals are subject to Primacy Agency review and approval.

If at any time the residual disinfectant concentration falls below 0.2 mg/l in a system using grab sample monitoring, the system must continue to take a grab sample every four hours until the residual disinfectant concentration is equal to or greater than 0.2 mg/l. For all systems, if the residual concentration is not restored to at least 0.2 mg/l within four hours after a value of less than 0.2 mg/l is observed, the system is

in violation of a treatment technique requirement, and must install filtration. However, if the Primacy Agency finds that the exceedance was caused by an unusual and unpredictable circumstance, the Primacy Agency may choose not to require filtration. EPA expects Primacy Agencies to use this provision sparingly; it is intended to encompass catastrophic events, not infrequent large storm events. In addition, any time the residual concentration falls below 0.2 mg/l, the system must notify the Primacy Agency. Notification must occur as soon as possible, but no later than the end of the next business day. The system also must notify the Primacy Agency by the end of the next business day whether or not the residual was restored within four hours.

Failure of a monitoring or reporting requirement does not trigger a requirement to filter although they are violations.

Maintaining a Residual Within the System

To avoid filtration, the disinfectant residual in the distribution system cannot be undetectable in more than five percent of the samples in a month, for any two consecutive months that the system serves water to the public. Systems may measure HPC instead of disinfectant residual. Sites with HPC concentrations of less than or equal to 500/ml are considered equivalent to sites with detectable residuals for the purpose of determining compliance. Public water systems must monitor for the presence of a disinfectant residual (or HPC levels) at the same frequency and locations as total coliform measurements taken pursuant to the Total Coliform Rule. However, if the Primacy Agency determines, based on site-specific considerations, that a system has no means for having a sample transported and analyzed for HPC by a certified laboratory within the requisite time and temperature conditions (Method 907, APHA, 1985), but that the system is providing adequate disinfection in the distribution system, this requirements does not apply to that system.

For systems which use both surface and ground water sources, the Primacy Agency may allow the system to take disinfectant residual or HPC samples at points other than the total coliform sampling locations if it determines that such points are more representative of treated (disinfected) water quality within the distribution system.

Disinfectant residual can be measured as total chlorine, free chlorine, combined chlorine or chlorine dioxide (or HPC level). The SWTR lists the approved analytical methods for these analyses. For example, several test methods can be used to test for chlorine residual in the water, including amperometric titration, DPD colorimetric, DPD ferrous titrimetric method and iodometric method, as described in the 16th Edition of Standard Methods.[8] Appendix D provides a review and summary of available techniques to measure disinfectant residuals.

If a system fails to maintain a detectable disinfectant residual or an HPC level of less than or equal to 500/ml in more than 5 percent of the samples during a month, for any two consecutive months the system serves water to the public, the system is in violation of a treatment technique requirement. In addition, this system must install filtration unless the Primacy Agency determines that the violation was not due to a deficiency in treatment of the source water (e.g., the violation was due to a deficiency in the distribution system, such as cross-connection contamination or failure in the pipeline).

The absence of a detectable disinfectant residual in the distribution system may be due to a number of factors, including:

- Insufficient chlorine applied at the treatment plant
- Interruption of chlorination
- A change in chlorine demand in either the source water or the distribution system
- Long standing times and/or, long transmission distances

Available options to correct the problem of low disinfectant residuals in distribution systems include:

- Routine flushing

---

[8] Also, portable test kits are available which can be used in the field to detect residual upon the approval of the Primacy Agency. These kits may employ titration or colorimetric test methods. The colorimetric kits employ either a visual detection of a residual through the use of a color wheel, or the detection of the residual through the use of a hand held spectrophotometer.

- Increasing disinfectant doses at the plant

- Cleaning of the pipes (either mechanically by pigging or by the addition of chemicals to dissolve the deposits) in the distribution system to remove accumulated debris which may be exerting a disinfectant demand;

- Flushing and disinfection of the portions of the distribution system in which a residual is not maintained; or

- Installation of satellite disinfection feed facilities within the distribution system.

For systems unable to maintain a residual, the Primacy Agency may determine that it is not feasible for the system to monitor HPC and judge that disinfection is adequate based on site-specific conditions.

Additional information on maintaining a residual in the system is available in the AWWA Manual of Water Supply Practices and Water Chlorination Principles and Practices.

3.2.4 Disinfection System Redundancy

Another requirement for unfiltered water supply systems is disinfection facility redundancy. A system providing disinfection as the only treatment is required to assure that the water delivered to the distribution system is continuously disinfected. The SWTR requires either redundant disinfection equipment with auxiliary power and automatic start-up and alarm; or an automatic shutoff of delivery of water to the distribution system when the disinfectant residual level drops below 0.2 mg/L. In order to fulfill the requirement of providing redundant disinfection facilities, the following system is recommended:

- All components have backup units with capacities equal to or greater than the largest unit on-line.

- A minimum of two storage units of disinfectant which can be used alternately - e.g., two cylinders of chlorine gas, two tanks of hypochlorite solution

- Where the disinfectant is generated on-site, such as ozone, backup units with a capacity equal to or greater than that of the largest unit on-line.

- Automatic switchover equipment to change the feed from one storage unit to the other before the first empties or becomes inoperable

- Feed systems with backup units with capacities equal to or greater than the largest unit on-line.

- An alternate power supply such as a standby generator with the capability of running all the electrical equipment at the disinfection station. The generator should be on-site and functional with the capability of automatic start-up on power failure

Systems providing disinfection may have several different configurations for type and location of disinfectant application. The following guidelines are provided to assist Primacy Agencies and utilities in determining the need for redundancy. Possible disinfection configurations include:

- one disinfectant used for primary and secondary disinfection
  - one point of application
  - multiple points of application
- two different disinfectants used for primary and secondary disinfection

In many cases one disinfectant will be used to fulfill both the total inactivation and residual requirements. One or more application points may be used to accomplish this. When one application point is used to meet both the primary and secondary disinfection requirements, the system is required to include redundant disinfection facilities.

When multiple points of application are used, redundancy is recommended for the disinfection facilities at each point of application which is essential to meet the total inactivation requirements. In addition, to assure the maintenance of a residual entering and throughout the distribution system, either:

- the last point of application prior to the distribution system should have redundancy, or
- the point of application immediately prior to this point should have redundancy and sufficient capacity to assure a residual entering the distribution system.

Systems may also use two different disinfectants, one to fulfill the inactivation requirements and the second to maintain a residual. An

example of this would include a system using ozone as a primary disinfectant and chloramines as a secondary disinfectant. EPA recommends that:

- the disinfection facilities at each point of disinfectant application in the primary system essential in providing the overall inactivation requirements include redundancy, and

- the secondary disinfection facilities include redundancy, unless the disinfectant used for primary disinfection can provide a residual for the distribution system as well. If the primary disinfectant can be used for residual maintenance, the last point of primary disinfectant application should include redundancy and sufficient capacity to assure a residual entering the distribution system.

Appendix I contains more specific information to assist the Primacy Agency in establishing requirements for providing redundant disinfection facilities.

Providing automatic shutoff of water delivery requires approval by the Primacy Agency. The Primacy Agency must determine that this action will not result in an unreasonable risk to health or interfere with fire protection. This determination should include the evaluation of the system configuration to protect against negative pressures in the system, and providing for high demand periods including fire flow requirements. Automatic shutoff should be allowed only if systems have adequate distribution system storage to maintain positive pressure for continued water use.

3.3 SITE-SPECIFIC CONDITIONS

In addition to meeting source water quality criteria and disinfection criteria, nonfiltering systems using surface water supplies must meet the following criteria:

- Maintain a watershed control program
- Conduct a yearly on-site inspection
- Determine that no waterborne disease outbreaks have occurred
- Comply with the revised annual total coliform MCL
- Comply with TTHM regulations (currently applies to systems serving >10,000 people)

Guidelines for meeting these other criteria are presented in the following sections.

3.3.1 Watershed Control Program

A watershed control program is a surveillance and monitoring program which is conducted to protect the quality of a surface water source. An aggressive and detailed watershed control program is desirable to effectively limit or eliminate potential contamination by human viruses. A watershed program may impact parameters such as turbidity, certain organic compounds, viruses, total and fecal coliforms, and areas of wildlife habitation. However, the program is expected to have little or no impact on parameters such as naturally occurring inorganic chemicals. Limiting human activity in the watershed may reduce the likelihood of animals becoming infected with pathogens and thereby reduce the transmission of pathogens by wildlife. Preventing animal activity near the source water intake prior to disinfection may also reduce the likelihood of pathogen occurrence at the intake.

The effect of a watershed program is difficult to quantify since many variables that influence water quality are beyond the control or knowledge of the water supplier. As a result, the benefit of a watershed control program or specific control measures must in many cases be based on accumulated cause and effect data and on the general knowledge of the impact of control measures rather than on actual quantification. The effectiveness of a program to limit or eliminate potential contamination by human viruses will be determined based on: the comprehensiveness of the watershed review; the ability of the water system to effectively carry

out and monitor the management decisions regarding control of detrimental activities occurring in the watershed; and the potential for the water system to maximize land ownership and/or control of land use within the watershed. According to the SWTR, a watershed control program should include as a minimum:

- A description of the watershed including its hydrology and land ownership
- Identification, monitoring and control of watershed characteristics and activities in the watershed which may have an adverse effect on the source water quality
- A program to gain ownership or control of the land within the watershed through written agreements with land owners, for the purpose of controlling activities which will adversely affect the microbiological quality of the water
- An annual report which identifies special concerns in the watershed and how they are being handled, identifies activities in the watershed, projects adverse activities expected to occur in the future and how the utility expects to address them.

Appendix J contains a more detailed guide to a comprehensive watershed program.

In preparing a watershed control program, surface water systems should draw upon the State watershed assessments and nonpoint source (NPS) pollution management programs required by S319 of the Clean Water Act. Information on these programs is available from State water quality agencies or EPA's regional offices. Assessments identify NPS pollutants in water and assess the water quality. Utilities should use the assessments when evaluating pollutants in their watershed. Surface water quality assessments can also be obtained from the lists of waters prepared under S304(1) of the Clean Water Act, and State biennially prepared S305(b) reports.

State NPS management programs identify best management practices (BMPs) to be employed in reducing NPS pollution. These management programs can be incorporated in the watershed program to protect against degradation of the source water quality.

For systems using ground water sources under the influence of surface water, the control measures delineated in the Wellhead Protection (WHP) program encompass the requirements of the watershed control program, and can be used to fulfill the requirements of the watershed control program. Guidance on the content of State Wellhead Protection Programs and the delineation of wellhead protection areas is given in: "Guidance for Applicants for State Wellhead Protection Program Assistance Funds Under the Safe Drinking Water Act," June, 1987, and "Guidelines for Delineation of Wellhead Protection Areas," June, 1987, available from the EPA office of Ground-Water Protection (WH-550G).

As a minimum, the WHP program must:

- Specify the duties of State agencies, local governmental entities and public water supply systems with respect to the development and implementation of Programs;

- Determine the wellhead protection area (WHPA) for each wellhead as defined in subsection 1428(e) based on all reasonably available hydrogeologic information, ground-water flow, recharge and discharge and other information the State deems necessary to adequately determine the WHPA;

- Identify within each WHPA all potential anthropogenic sources of contaminants which may have any adverse effect on the health of persons;

- Describe a program that contains, as appropriate, technical assistance, financial assistance, implementation of control measures, education, training and demonstration projects to protect the water supply within WHPAs from such contaminants;

- Present contingency plans for locating and providing alternate drinking water supplies for each public water system in the event of well or wellfield contamination by such contaminants;

- Consider all potential sources of such contaminants within the expected wellhead area of a new water well which serves a public water supply system; and

- Provide for public participation.

3.3.2 On-site Inspection

The watershed control program and on-site inspection are interrelated preventive strategies. On-site inspection is actually a program which includes and surpasses the requirements of a watershed program.

While the watershed program is mainly concerned with the water source, on-site inspection includes some additional requirements for source water quality control and is also concerned with the disinfection facilities. As defined by the EPA, an on-site inspection includes review of the water source, disinfection facilities and operation and maintenance of a public water system for the purpose of evaluating the adequacy of such systems for producing safe drinking water.

The SWTR requires an annual on-site inspection to evaluate the watershed control program and disinfection facilities. The inspection must be performed by a party approved by the Primacy Agency. The inspection should be conducted by competent individuals such as sanitary and civil engineers, sanitarians, and technicians who have experience and knowledge in the operation, maintenance, and design of water systems, and who have a sound understanding of public health principles and waterborne diseases. Guidance for the contents of an inspection are included in the following paragraphs. Appendix K presents guidelines for a sanitary survey which includes and surpasses the requirements of an on-site inspection.

As the first step in determining which SWTR requirements, if any, a source is subject to, EPA recommends that utilities conduct a detailed, comprehensive sanitary survey. Appendix K presents a comprehensive list of water system features that the person conducting the survey should be aware of and review as appropriate. This initial investigation establishes the quality of the water source, its treatment and delivery to the consumer. EPA recommends that this comprehensive evaluation be repeated every three years for systems serving 4,100 people or less and every five years for systems serving more than 4,100 people. Also, under the Total Coliform Rule, ground water systems which take less than 5 coliform samples per month must conduct such sanitary surveys within every 5 or 10 years depending upon whether the source is protected and disinfected.

The annual on-site inspection to fulfill the SWTR requirements should include as a minimum:

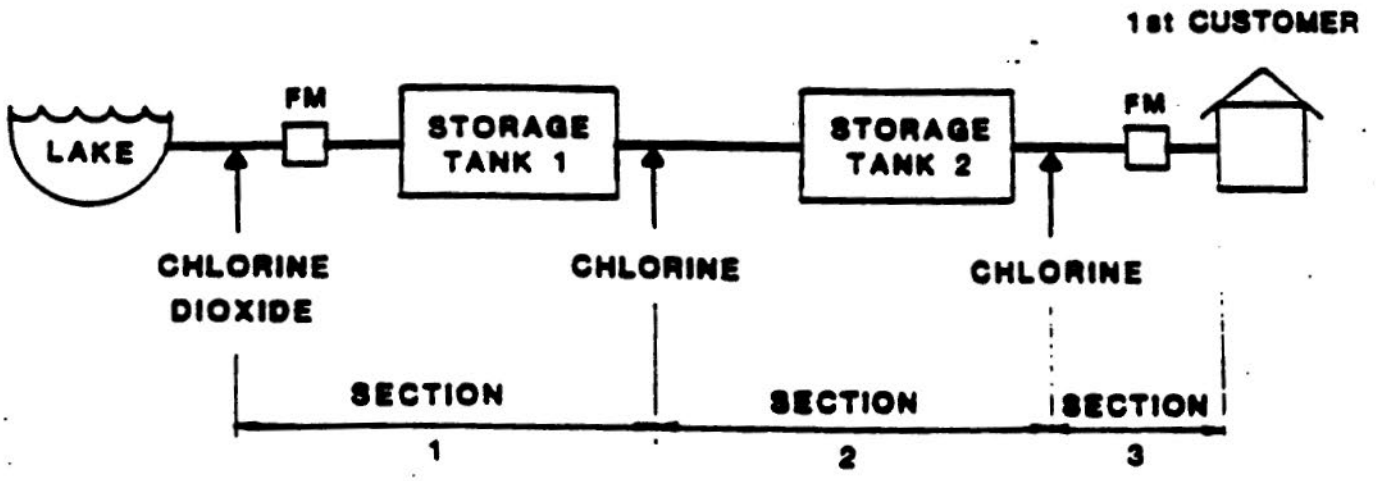

FIGURE 3-1-DETERMINATION OF INACTIVATION FOR MULTIPLE DISINFECTANT APPLICATION TO A SURFACE WATER SOURCE

1. Source Evaluation

   a. Review the effectiveness of the watershed control program (Appendix J).

   b. Review the physical condition and protection of the source intake.

   c. Review the maintenance program to insure that all disinfection equipment is appropriate and has received regular maintenance and repair to assure a high operating reliability.

2. Treatment Evaluation

   a. Review improvements and/or additions made to disinfection processes during the previous year to correct deficiencies detected in earlier surveys.

   b. Review the condition of disinfection equipment.

   c. Review operating procedures.

   d. Review data records to assure that all required tests are being conducted and recorded and disinfection is effectively practiced (CT calculations should be spot checked to ensure that they were done correctly).

   e. Identify any needed improvements in the equipment, system maintenance and operation, or data collection.

In addition to these requirements, a periodic sanitary survey is recommended for all systems, including those with filtered and unfiltered supplies. The sanitary survey should include the items listed in 1 and 2 above as well as:

3. Distribution System Evaluation

   a. Review the condition of storage facilities.

   b. Determine that the system has sufficient pressure throughout the year.

   c. Verify that system equipment has received regular maintenance.

   d. Review additions/improvements incorporated during the year to correct deficiencies detected in the initial inspection.

e. Review cross connection prevention program, including annual testing of backflow prevention devices.

f. Review routine flushing program for effectiveness.

g. Evaluate the corrosion control program and its impact on distribution water quality.

h. Review the adequacy of the program for periodic storage reservoir flushing.

i. Review practices in repairing water main breaks to assure they include disinfection.

4. Management/Operation Evaluation

a. Review the operations to assure that any difficulties experienced during the year have been adequately addressed.

b. Review staffing to assure adequate numbers of properly trained and/or certified personnel are available.

c. Verify that a regular maintenance schedule is followed.

d. Audit systems records to verify that they are adequately maintained.

e. Review bacteriological data from the distribution system for coliform occurrence, repeat samples and action response.

3.3.3 No Disease Outbreaks

Under the provisions of the SWTR, a surface water system which does not filter must not have been identified as a source of waterborne disease, or if it has been so identified, the system must have been modified sufficiently to prevent another such occurrence, as determined by the Primacy Agency. If a waterborne disease outbreak has occurred and the outbreak was or is attributed to a treatment deficiency, then the system must install filtration unless the system has upgraded its treatment system to remedy the deficiency which led to the outbreak and the Primacy Agency has determined that the system is satisfying this requirement. If the Primacy Agency has determined the disease outbreak was the result of a distribution system problem rather than a source water treatment deficiency, the system is not required to install filtration.

In order to determine whether the above requirement is being met, the responsible federal, state and local health agencies should be surveyed to obtain the current and historical information on waterborne disease outbreaks which may have occurred within a given system. Whether conducted by the Primacy Agency or submitted by the water purveyor, this information should include:

1. Source of the Information:

   a. Name of agency
   b. Name and phone number of person contacted
   c. Date of inquiry

2. Outbreak Data

   a. Known or suspected incidents of waterborne disease outbreaks
   b. Date(s) of occurrence(s)
   c. Type or identity of illness
   d. Number of cases

3. Status of Disease Reporting:

   a. Changes in regulations; e.g., giardiasis was not a reportable disease until 1985

4. If a Disease Outbreak has Occurred:

   a. Was the reason for the outbreak identified; e.g., inadequate disinfection?

   b. Did the outbreak occur while the system was in its current configuration?

   c. Was remedial action taken?

   d. Have there been any further outbreaks since the remedial action was taken?

If a review of the available information indicates that the system or network for disease reporting is inadequate within the Primacy Agency's area of responsibility, efforts should be made to encourage the appropriate agencies to upgrade the disease reporting capabilities within the area.

3.3.4 Monthly Coliform MCL

To avoid filtration, a system must comply with the MCL for total coliforms, established in the Total Coliform Rule, for at least 11 out of the previous 12 months the system served water to the public on an ongoing basis, unless the Primacy Agency determines that failure to meet this requirement was not caused by a deficiency in treatment of the source water. If the Primacy Agency makes such a determination, the system is not required to install filtration. The Total Coliform Rule requires systems using surface water or ground water under the influence of surface water which do not filter to collect a sample at or near the first customer each day that the turbidity level exceeds 1 NTU within 24 hours of learning of the result and to analyze the sample for the presence of total coliforms. (If the Primacy Agency determines that it is not possible for the system to have such a sample analyzed within 24 hours, this time limit may be extended on a case-by-case basis.) This sample may be used to fulfill the routine compliance monitoring requirements of the Total Coliform Rule. The results of the additional sample must be included in determining whether the system is in compliance with the monthly MCL for total coliforms.

3.3.5 Total Trihalomethane (TTHM) Regulations

For the system to continue to use disinfection as the only treatment, it must comply with the total trihalomethane (TTHM) MCL regulation. The current regulation established an MCL for total TTHM of 0.10 mg/L for systems serving a population greater than 10,000. Both the MCL and the system population covered may be reduced in the future, and this should be considered when planning disinfectant application.

One alternative to meet the CT requirements of the SWTR is to increase the disinfectant dose. For many systems, a higher chlorine dose will result in increased formation of TTHMs. Changes in disinfection practice should maintain TTHM levels of less than 0.10 mg/L. In lieu of increasing chlorine dose, use of an alternate disinfectant which produces fewer TTHMs could be considered. Alternate disinfectants include the use of ozone or chlorine dioxide as primary disinfectants with chlorine or chloramines as secondary (residual) disinfectants. It is important to note that EPA also will promulgate regulations for disinfectants and

disinfection by-products which may limit application of some of these disinfectants. EPA recommends that Primacy Agencies keep informed through communication with EPA on interim guidance on how to avoid conflict for systems to comply with both the SWTR and the forthcoming regulations on disinfectants and disinfection by-products. Any changes which appear to not meet the by-product regulations should not be implemented.

4. DESIGN AND OPERATING CRITERIA FOR FILTRATION AND DISINFECTION TECHNOLOGY

4.1 Introduction

To comply with the SWTR, public water systems must include filtration, or some other approved particulate removal technology, in their treatment process unless they are able to satisfy certain conditions. Those conditions include compliance with source water quality criteria and site-specific criteria. Guidance for determining whether these conditions are met is provided in Section 3 of this manual. Systems unable to satisfy these conditions must provide particulate removal and meet criteria pertaining to operation, design and performance. These criteria are specified in part in the definitions of technologies in the SWTR and more specifically as determined by the Primacy Agency.

This section provides guidance both for those water systems which currently do not have filtration equipment and must add it, and for systems which have existing filtration processes. Guidance on additional alternatives for small systems is presented in Appendix L.

This section includes guidance on the following topics:

a. Filtration Technology: Descriptions, capabilities, design criteria and operating requirements for each technology, and a listing of major factors to be considered in their selection, including raw water quality considerations.

b. Disinfection: Descriptions of the most applicable disinfection technologies used with filtration systems, and a presentation of the relative effectiveness of these disinfection technologies with respect to inactivation of bacteria, cysts and viruses.

c. Alternate Technologies: Descriptions of some currently available alternate filtration technologies.

d. Other Alternatives: Includes a description of some nontreatment alternatives including regionalization and use of an alternate source.

4.2 Selection of Appropriate Filtration Technology

Filtration is generally provided by passing water through a bed of sand, a layer of diatomaceous earth or a combination bed of coarse anthra-

cite coal overlaying finer sand. Filters are classified and named in a number of ways. For example, based on application rate, sand filters can be classified as either slow or rapid; yet these two types of filters differ in many more characteristics than just application rate. They differ in their removal process, bed material, method of cleaning, and operation. Based on the type of bed material, filters can be classified as sand, diatomaceous earth, dual-media (coal-sand) or even multi-media in which a third layer of high density sand is used.

4.2.1 General Descriptions

Current technologies specified by the SWTR are:

a. Conventional Treatment: A series of processes including coagulation, flocculation, sedimentation and filtration.

b. Direct Filtration: A series of processes including coagulation (and perhaps flocculation) and filtration, but excluding sedimentation.

c. Slow Sand Filtration: A process which involves passage of raw water through a bed of sand at low velocity, generally less than 0.4 meters/hour (1.2 ft/hr), resulting in substantial particulate removal by physical and biological mechanisms.

d. Diatomaceous Earth Filtration: A process that meets the following conditions:

   - A precoat cake of diatomaceous earth filter media is deposited on a support membrane (septum)

   - The water is filtered by passing it through the cake on the septum; additional filter media, known as body feed, is continuously added to the feed water in order to maintain the permeability of the filter cake.

e. Alternate Technologies: Any filtration process other than those listed above. Available alternate filtration technologies include, but are not limited to:

- Package Plants[1]
- Cartridge Filters

4.2.2 Capabilities

Filtration processes provide various levels of turbidity and microbial contaminant removal. When properly designed and operated and when treating source waters of suitable quality, the above filtration processes are capable of achieving at least a 2-log (99 percent) removal of Giardia cysts and at least a 1-log (90 percent) removal of viruses without disinfection (Logsdon, 1987b; USEPA, 1988b; Roebeck, 1962). The exception is cartridge filters which may not provide effective virus removal. A summary of the removal capabilities of the various filtration processes is presented in Table 4-1.

As indicated in Table 4-1, conventional treatment without disinfection is capable of achieving up to a 3-log removal of Giardia cysts and up to a 3-log removal of viruses. Direct filtration can achieve up to a 3-log removal of Giardia cysts and up to a 2-log removal of viruses. Achieving the maximum removal efficiencies with these treatment processes requires the raw water to be properly coagulated and filtered. Factors which can adversely affecy removal efficiencies include:

- Raw water turbidities less than 1 NTU
- Cold water conditions
- Non-optimal or no coagulation
- Improper filter operation including:

---

[1] Depending upon the type of treatment units in place, historical performance and/or pilot plant work, these plants could be categorized as one of the technologies in a-d above at the discretion of the State. Several studies have already indicated that some package plants effectively remove Giardia cysts. If such plants provided adequate disinfection so that the complete treatment train achieves at least a 3-log removal/inactivation of Giardia cysts and a 4-log removal/inactivation of viruses, use of this technology would satisfy the minimum treatment requirements.

- No filter to waste
- Intermittent operation
- Sudden rate changes
- Poor housekeeping
- Operating the filters after turbidity breakthrough

Studies of slow sand filtration have shown that this technology (without disinfection) is capable of providing greater than a 3-log removal of Giardia cysts and greater than a 3-log removal of viruses. Factors which can adversely affect removal efficiencies include:

- Poor source water quality
- Cold water conditions
- Increases in filtration rates
- Decreases in bed depth
- Improper sand size
- Inadequate ripening

Diatomaceous earth (DE) filtration can achieve greater than a 3-log removal of Giardia cysts when sufficient precoat and body feed are used. However, turbidity and total coliform removals are strongly influenced by the grade of DE employed. Conversely, DE filtration is not very effective for removing viruses unless the surface properties of the diatomaceous earth have been altered by pretreatment of the body feed with alum or a suitable polymer. In general, DE filtration is assumed to achieve only a 1-log removal of viruses unless demonstrated otherwise. Factors which can affect the removal of Giardia cysts and viruses include:

- Precoat thickness
- Amount of body feed
- Grade of DE
- Improper conditioning of septum
- Improper pretreatment of the body feed

Package plants can be used to treat water supplies for communities as well as for recreational areas, parks, construction camps, ski resorts, military installations and other facilities where potable water is not available from a municipal supply. Operator requirements vary significantly with specific situations. Under unfavorable raw water conditions,

TABLE 4-1

REMOVAL CAPABILITIES OF FILTRATION PROCESSES[1]

Process	Log Removals		
	Giardia[2] Cysts	Viruses	Total[2] Coliform
Conventional Treatment	2 - 3	1 - 3[3]	>4
Direct Filtration	2 - 3	1 - 2[3]	1 - 3
Slow Sand Filtration	2 - 3[5]	1 - 3[4]	1 - 2
Diatomaceous Earth Filtration	2 - 3[5]	1 - 2[2]	1 - 3

Note:

1. Without disinfection.
2. Logsdon, 1987b.
3. Roebeck et al 1962.
4. Poynter and Slade, 1977.
5. These technologies generally achieve greater than a 3-log removal.

package plants could demand full-time attention. Package plants are most widely used to treat surface supplies for removal of turbidity, color and coliform organisms prior to disinfection. They are currently available in capacities up to 6 mgd.

Colorado State University conducted a series of tests on one package plant over a 5-month period during the winter of 1985-86 (Horn and Hendricks, 1986). Existing installations in Colorado had proven effective for turbidity removal, and the tests at the university were designed to evaluate the system's effectiveness in removing coliform bacteria and Giardia cysts from low turbidity, low temperature source waters. The test results showed that the filtration system could remove greater than 99 percent of Giardia cysts for waters which had less than 1 NTU turbidity and less than 5 C temperatures, as long as proper chemical treatment was applied, and the filter rate was 10 gpm/ft^2 or less. In addition, an alternate water source having a turbidity ranging from 3.9 to 4.5 NTU was used in 12 test runs with coagulant doses ranging from 15 to 45 mg/L. The effluent turbidities from these runs were consistently less than 0.5 NTU.

Surveys of existing facilities indicate that while package plants may be capable of achieving effective treatment, many have not consistently met the interim MCL for turbidity, and in some cases, coliforms were detected in the filtered water (Morand et al., 1980; Morand and Young, 1983). The performance difficulties were primarily the result of the short detention time inherent in the design of the treatment units, the lack of skilled operators with sufficient time to devote to operating the treatment facilities, and the wide-ranging variability in quality of the raw water source. For instance, raw water turbidity was reported to often exceed 100 NTU at one site. Improvements in operational techniques and methods at this site resulted in a substantial improvement in effluent quality. After adjustments were made, the plant was capable of producing a filtered water with turbidities less than 1 NTU, even when influent turbidities increased from 17 to 100 NTU within a 2-hour period, as long as proper coagulation was provided.

One of the major conclusions of these surveys was that package water treatment plants manned by competent operators can consistently remove

turbidity and bacteria from surface waters of a fairly uniform quality. Package plants applied where raw water turbidities are variable require a high degree of operational skill and nearly constant attention by the operator. Regardless of the quality of the raw water source, all package plants require at least a minimum level of maintenance and operational skill and proper chemical treatment if they are to produce satisfactory water quality.

Cartridge filters using microporous filter elements (ceramic, paper or fiber) with pore sizes as small as 0.2 um may be suitable for producing potable water from raw water supplies containing moderate levels of turbidity, algae and microbiological contaminants. The advantage to small systems of these cartridge filters is that, with the exception of disinfectant, no other chemicals are required. The process is one of strictly physical removal of small particles by straining as the water passes through a porous cartridge. Other than occasional cleaning or cartridge replacement, operational requirements are not complex and do not require skilled personnel. However, the SWTR does require each surface water system to be operated by a qualified operator, as determined by the Primacy Agency. Such a system may be suitable for some small systems where, generally, only maintenance personnel are available for operating water supply facilities. However, the use of cartridge filters should be limited to low turbidity source waters because of their susceptibility to rapid headloss buildup. For example, manufacturer's guidelines for achieving reasonable filter run lengths with certain polypropylene filter elements are that the raw water turbidity be 2 NTU or less (USEPA, 1988b).

Long (1983) analyzed the efficacy of a variety of cartridge filters using turbidity measurements, particle size analysis, and scanning electron microscope analysis. The filters were challenged with a suspension of microspheres averaging 5.7 um in diameter which is smaller than a Giardia cyst. The microspheres were applied at a concentration of 40,000 to 65,000 spheres per ml. Ten of 17 cartridge filters removed over 99.9 percent of the microspheres.

In tests using live infectious cysts from a human source, cartridge filters were found to be highly efficient in removing Giardia cysts

(Hibler, 1986). Each test involved challenging a filter with 300,000 cysts at a concentration of 10,000 cysts/ml. The average removal for five tests was 99.86 percent, with removal efficiencies ranging from 99.5 percent to 99.99 percent.

The application of cartridge filters to small water systems using either cleanable ceramic or disposable polypropylene cartridges appears to be a feasible method for removing turbidity and most microbiological contaminants. However, data regarding the ability of cartridge filters to remove viruses are not available. Since disinfection by itself could achieve a 4-log inactivation of viruses, if the cartridge filter removes greater than or equal to 3 logs of Giardia, then the filter plus disinfection would achieve the overall minimum requirements, regardless of whether only negligible Giardia inactivation is achieved (e.g., less than 0.5 log). However, consideration should be given to the feasibility of providing multiple barriers of treatment for each target organism, i.e., some Giardia and virus removal by each barrier (i.e., some removal by filtration and some inactivation by disinfection) as protection in case one of the barriers fails. The efficiency and economics of the process must be closely evaluated for each situation. Pretreatment in the form of roughing filters (rapid sand or multi-media) or fine mesh screens may be needed to remove larger suspended solids which, if not removed, could cause the rapid buildup of headloss across the cartridges (USEPA, 1988a).

In general, conventional treatment, direct filtration, slow sand filtration and diatomaceous earth filtration can be designed and operated to achieve the maximum removal of the water quality parameters indicated in Table 4-1. However, for the purpose of selecting the appropriate filtration and disinfection technologies and for determining design criteria, these filtration processes should be assumed to achieve a 2-log removal of Giardia cysts and a 1-log removal of viruses. This conservative approach will assure that the treatment facility has adequate capability to respond to non-optimum performance due to changes in raw water quality, plant upsets, etc. The balance of the required removals and/or inactivation of Giardia cysts and viruses would be achieved through the application of appropriate disinfection.

The performance of alternate technologies such as cartridge filters, and possibly package plants, depending upon the unit under consideration cannot be stated with certainty at this time. Because of these performance uncertainties, pilot studies should be used to demonstrate their efficacy for a given water supply.

4.2.3 Selection

For any specific site and situation, a number of factors will determine which filtration technology is most appropriate. Among these are: raw water quality conditions, space and personnel availability, and economic constraints. A discussion of the impact of raw water quality on the technology selection is presented here. The impact of site-specific factors and economic constraints is presented in the USEPA document "Technologies and Costs for the Removal of Microbial Contaminants from Potable Water Supplies" (USEPA, 1988b).

Raw Water Quality Conditions

The number of treatment barriers provided should be commensurate with the degree of contamination in the source water. The four technologies specified in the SWTR vary in their ability to meet the performance criteria when a wide range of raw water quality is considered. While the numerical values of raw water quality that can be accommodated by each of the four technologies will vary from site to site, general guidance can be provided. General guidelines for selecting filtration processes, based on total coliform count, turbidity, and color are presented in Table 4-2. It is not recommended that filtration systems other than those listed in Table 4-2 be used when the general raw water quality conditions exceed the values listed, unless it has been demonstrated through pilot testing that the technology can meet the performance criteria under the raw water quality conditions expected to occur at the site.

The filtration processes listed in Table 4-1 are capable of achieving the required performance criteria when properly designed and operated if they are treating a source water of suitable quality (i.e., generally within the ranges indicated in Table 4-2). One of the causes

TABLE 4-2

GENERALIZED CAPABILITY OF FILTRATION SYSTEMS TO ACCOMMODATE RAW WATER QUALITY CONDITIONS

Treatment	General Restrictions		
	Total Coliforms (#/100 ml)	Turbidity (NTU)	Color (CU)
Conventional with predisinfection	<20,000[3]	No restrictions[3]	<75[2]
Conventional without predisinfection	<5,000[3]	No restrictions[3]	<75[2]
Direct filtration with flocculation	<500[3]	<7-14[1]	<40[4]
In-line filtration	<500[3]	<7-14[1]	<10[3]
Slow sand filtration	<800[5]	<10[5]	<5[3]
Diatomaceous earth filtration	<50[3]	<5[3]	<5[3]

Notes:

1. Depends on algae population, alum or cationic polymer coagulation -- (Cleasby et al., 1984.)
2. USEPA, 1971.
3. Letterman, 1986.
4. Bishop et al., 1980.
5. Slezak and Sims, 1984.

of filtration failures is the use of inappropriate technology for a given raw water quality (Logsdon, 1987b). These criteria are general guidelines. Periodic occurrences of raw water coliform, turbidity or color levels in excess of the values presented in Table 4-2 should not preclude the selection or use of a particular filtration technology. For example, the following alternatives are available for responding to occasional raw water turbidity spikes:

a. Direct Filtration
   - Continuous monitoring and coagulant dose adjustment
   - More frequent backwash of filters
   - Use of presedimentation

b. Slow Sand Filtration
   - Use of a roughing filter
   - Use of an infiltration gallery

c. Diatomaceous Earth Filtration
   - Use of a roughing filter
   - Use of excess body feed

For the above alternatives, EPA recommends that pilot testing be conducted to demonstrate the efficacy of the treatment alternative.

The characteristics of each filtration technology are a major factor in the selection process. Significant characteristics include performance capabilities (contaminant removal efficiencies), design and construction requirements, and operation and maintenance requirements. Details regarding each of the four filtration technologies are presented in the following section.

4.3 Available Filtration Technologies

4.3.1 Introduction

As indicated in the preamble to the SWTR, the historical responsibility of the States to establish design and operating criteria for public drinking water plants will continue. The purpose of the following sections is to provide guidance on how the design and operating criteria may need to be changed in order to assure that the performance criteria in the SWTR are met.

The design criteria for the various filtration technologies found in the 1987 edition of Recommended Standards for Water Works (Great Lakes, 1987) are the minimum design criteria that a majority of states are currently following.[2] These standards are referred to as Ten States Standards in the remainder of this manual. The design criteria contained in the Ten States Standards have not been duplicated here. Rather, the reader is referred to the Ten States Standards directly. EPA recommends the following additions and/or changes to the Ten State Standards in order to assure compliance with the performance criteria of the SWTR.

4.3.2 General

The following recommendations apply to all filtration plants:

a. All filtration plants should provide continuous turbidity monitoring of the effluent turbidity from each individual filter.[3,4] If continuous monitoring is impractical, routine monitoring of individual filters is recommended as a minimum.

b. All filtration systems should be concerned with the peak turbidity levels in the filtered water after backwashing and

---

[2] Based upon the results of a survey conducted for the American Water Works Association Research Foundation (AWWARF), some 38 states use the Ten States Standards entirely or in modified form (AWWARF, 1986).

[3] Although this is not a requirement of the SWTR, it is recommended because of the possibility that not all filters in a treatment plant will produce the same effluent turbidity. This may be due to a variety of conditions that include bed upsets, failure of media support or underdrain systems, etc. Although the combined effluent from all the filters may meet the turbidity requirements of the SWTR, the turbidity level from an individual filter may substantially exceed the limits. This may result in the passage of Giardia cysts or other pathogens.

[4] Validation should be performed at least twice a week based on the procedure outlined in Part 214A in the 16th Edition of Standard Methods. It should be noted that improper installation of continuous monitors may allow for air bubbles to enter the monitor resulting in false turbidity spikes. To avoid air bubbles reaching the turbidimeter the sample tap should be installed below the center line of the pipe and an air release valve may be included on the sample line.

make every attempt to operate the filters to minimize the magnitude and duration of these turbidity spikes.[5]

Individual filters should be monitored as discussed in Section 4.3.2.a and when excessive turbidity spikes are found, corrective actions taken. During these turbidity peaks, Giardia cysts and other pathogens may be passed into the finished water. There is evidence that a 0.2 to 0.3 NTU increase in the turbidity during the first period of the filter run can be associated with rises in Giardia cyst concentrations by factors of twenty to forty (Logsdon, 1985). Special studies should be conducted to determine the extent of the turbidity spike problems.

There are basically four approaches available for correcting problems with turbidity spikes after backwashing. These are as follows (Bucklin, et al 1988):

- Proper chemical conditioning of the influent water to the filter can minimize the magnitude and duration of these turbidity spikes. This could include proper control of the primary coagulant chemicals such as alum or iron compounds. In some cases filter aids using polymers may be needed to control the turbidity spikes.

- Gradually increasing the filtration rate in increments when placing the filter in operation. Starting the filter at a low flow rate and then increasing the flow in small increments over 10 to 15 minutes has been shown to reduce the turbidity spikes in some cases (Logsdon, 1987).

- Addition of coagulants to the backwash water has also been shown to reduce the extent of turbidity spikes after backwash. Typically the same primary coagulant used in the plant is added to the backwash water. Polymers alone or in combination with the primary coagulant may also be used.

- Filter-to-waste may be practiced where a portion of the filtered water immediately after starting the filter is wasted. This is only possible where the filter system has

---

[5] For most high rate granular bed filters, there is a period of conditioning, or break-in immediately following backwashing, during which turbidity and particle removal is at a minimum, referred to as the break-in period. The turbidity peaks are thought to be caused by remnants of backwash water within the pores of and above the media passing through the filter, and/or floc breakup during the filter ripening period before it can adequately remove influent turbidity.

provided the necessary valves and piping to allow this procedure. There is some concern whether or not this practice is beneficial. The extra valve operations needed for filter-to-waste can disrupt the filter flow rate to the extent that they create their own turbidity spikes. Some knowledge of the time actually needed for filter-to-waste is also needed before it can be determined that this is an effective procedure for controlling turbidity spikes. If the length of time the filter-to-waste is practiced is less than that before the turbidity spike passes, the disruption caused by the valve operation may actually increase the turbidity spike.

Different plants and the individual filters within the plant may have different turbidity spike characteristics. The four approaches presented above, therefore, must be evaluated on a case-by-case basis. Special studies will be required to identify those filters with the turbidity spike problems and assist in selecting which of the four approaches is best for correcting the problem. It has been generally found that turbidity spikes can be minimized through one or a combination of the first three approaches.

In order to establish filter-to-waste operating guidelines, the following procedure is suggested:

- Review the effluent turbidity data for each filter and determine which filter historically has the highest effluent turbidity.
- Following backwashing of the filter with the poorest performance, place that filter into service and collect grab samples every 5 to 10 minutes for a period of at least 60 minutes.[6]
- Analyze the grab samples for turbidity and determine how long the filter must be in operation before the effluent turbidity drops
  - to less than or equal to 0.5 NTU
  - or 1 NTU in cases where a filtered water turbidity of less than or equal to 1 NTU is allowed.

---

[6] Continuous turbidity monitoring can be used in place of grab sampling.

Limited information exists on the typical magnitude and duration of peak turbidity levels after backwashing and what levels are considered acceptable to assure that these turbidity spikes are not associated with passage of Giardia cysts. Information from plant scale tests, showing the typical magnitude and duration of these turbidity spikes is available from two plants (Bucklin et al., 1988). Studies conducted at these plants over a year showed that these peaks occurred within the first few minutes after the filter was placed back in operation, their effects lasted for several hours, and varied in magnitude from 0.08 to 0.35 NTU on average.

For existing plants without provisions for filter-to-waste, the decision to add the necessary piping to provide this capability should be made only after carefully evaluating the other three approaches. If the results of special studies show that the other three options are not effective in minimizing the turbidity spikes then the expense of adding the filter-to-waste capabilities may be justified.

For new plants the capability of filter-to-waste may be required by the Primacy Agency or should be considered. By having this capability, additional flexibility will be available for turbidity spike control. This flexibility may also be useful for other filter maintenance functions such as after media replacement or when heavy chlorination of the filter is needed after maintenance.

4.3.3 Conventional Treatment

Conventional treatment is the most widely used technology for removing turbidity and microbial contaminants from surface water supplies. Conventional treatment includes the pretreatment steps of chemical coagulation, rapid mixing, flocculation and sedimentation followed by filtration. These conventional treatment plants typically use aluminum and iron compounds in the coagulation processes. Polymers may also be used to enhance the coagulation and filtration processes. A flow sheet for a conventional treatment plant is presented on Figure 4-1.

Lime softening is a treatment process used to remove hardness and turbidity from surface waters. Treatment is typically accomplished with conventional process units. The lime softening process removes the

calcium and magnesium from the water by precipitating them as calcium carbonate and magnesium hydroxide. Turbidity levels in the water are also reduced by this process. Lime and possibly soda ash is added to the raw water to raise its pH to a point at which these precipitates are formed and then removed from the water during sedimentation and filtration. Lime softening may be used for the removal of carbonate hardness in the pH range of 9 to 10 through a single stage process. Two-stage lime/soda ash softening at a pH of 10 to 12 can be used for the removal of non-carbonate hardness and magnesium. Two-stage softening includes recarbonation to neutralize the caustic alkalinity, reducing the pH to the range of 8.5 to 9.5. A flow sheet for typical one- and two-stage softening plants is presented on Figure 4-2.

Each of these three conventional treatment processes uses filtration following sedimentation. Three different types of filters are used. Sand filters, normally found in older plants, use a single media of sand to form a filter bed, and are generally designed with a filtration rate of 2 gpm/ft^2. Newer plants normally use dual-media or mixed media filters. Dual media filters use a combination of anthracite coal along with a sand to form the filter bed. Mixed media filters use coal, sand, and a third material to form the filter bed. Dual and mixed media filters can be designed to operate at higher filtration rates than sand filters, i.e., 4 to 6 gpm/ft^2.

Design Criteria

The minimum design criteria in the Ten State Standards for conventional treatment are considered sufficient for the purposes of complying with the SWTR with the following addition:

- The criteria for sedimentation should be expanded to include other methods of solids removal including dissolved air flotation. Plate separation and upflow-solids contact clarifiers included in the 1987 Ten State Standards should also be considered.

Operating Requirements

In addition to the operating requirements in the Ten State Standards, a coagulant should be used at all times the treatment plant is

in operation.[7] Conventional and direct filtration plants must be monitored carefully because failure to maintain optimum coagulation can result in poor filter performance and breakthrough of cysts and viruses.[8] Although the detention time provided by the settling basins results in some margin of safety, the loss of coagulation control at the chemical feed or rapid mix points may not be noticed until the poorly coagulated water reaches the filters, after the process has failed. Failure to effectively monitor and control filter operation can result in undetected poor filter performance (Logsdon, 1987a; Logsdon, 1987b).

Effective operation of a conventional treatment plant requires careful monitoring and control of:

- Chemical Feed
- Rapid Mix
- Flocculation
- Sedimentation
- Filtration

For the purposes of the SWTR, the requirements for effective operation of a conventional water treatment plant can be summarized as follows:

a. The application of a coagulant and the maintenance of effective coagulation and flocculation at all times when a treatment plant is in operation.[9] Proper process control

---

[7] Dependable removal of Giardia cysts can not be guaranteed if a water is filtered without being properly coagulated (Logsdon, 1987b; Al-Ani et al., 1985). This is true even if the raw water turbidity is less than 1 NTU.

[8] As indicated in the preamble to the proposed SWTR, 33 percent of the reported cases of giardiasis in waterborne disease outbreaks were attributed to improperly operated filtration plants.

[9] Some conventional water treatment plants which treat low turbidity source waters (<1 NTU) reportedly discontinue the application of coagulant(s) during periods of low turbidity since the raw water already meets the turbidity MCL. However, studies have shown that cyst removal for low turbidity waters is the most difficult to achieve and requires optimum pretreatment including coagulation to achieve effective removals

procedures should be used at the plant to assure that chemical feeds are adjusted and maintained in response to variations in raw water temperature and turbidity.

b. Maintenance of effective filtration will require proper operation procedures to meet the turbidity requirements of the SWTR. Proper operation should include:

- Proper chemical conditioning of the water ahead of the filter to assure adequate turbidity removal through the filter.
- Control of the flow rates and elimination of rapid changes in flow rate applied to the filter.
- Backwashing of filters before the filtered water quality is degraded to the point that the plant fails to meet the turbidity requirements of the SWTR. The criteria on which to base initiation of backwash will have to be determined for each plant. Experience with operation cycles including run times and headloss data may serve as the basis for this site specific criteria.
- After backwash bringing the clean filters back on line so that excessive turbidity spikes in the filtered water are not created. Section 4.3.2.8 of this manual discusses these turbidity spikes and approaches available to minimize them.

c. Filters removed from service generally should be backwashed upon start-up. However, in some cases, it may be impractical to backwash filters each time they are removed from service. Accordingly, the Primacy Agency may choose to allow start-up without backwashing under certain conditions on a site-by-site basis. In making this decision, the following should be considered:

- the length of time the filter was off-line
- performance of the filter while being put on-line

The filter should be brought back on-line in such a way that no turbidity spikes that could be associated with passage of

---

(Al-Ani et al., 1985).

Giardia cysts and other pathogens occur. If problems with turbidity spikes are found when starting up dirty filters, special studies should be used to evaluate if any of the approaches discussed in Section 4.3.2.8 of this manual are effective in minimizing the turbidity spikes.

4.3.4 Direct Filtration

A direct filtration plant can include several different pretreatment unit processes depending upon the application. In its simplest form, the process includes only in-line filters preceded by chemical coagulant application and mixing. The mixing step, particularly in pressure filters, can be satisfied by influent pipeline turbulence. In larger plants with gravity filters, an open rapid-mix basin with mechanical mixers typically is used. Figure 4-3 illustrates the unit processes of a typical direct filtration plant.

Another variation of the direct filtration process consists of the addition of a coagulant to the raw water followed by rapid mixing and flocculation, as illustrated on Figure 4-4. The chemically conditioned and flocculated water is then applied directly to a dual- or multi-media filter (USEPA, 1988b).

Design Criteria

The 1987 edition of the Ten State Standards recommends pilot studies to determine most design criteria. For the purposes of implementation of the SWTR this requirement is considered sufficient with the following exception:

a. A coagulant must be used at all times when the treatment plant is in operation.[10]

---

[10] Optimum coagulation is critical for effective turbidity and microbiological removals with direct filtration (Al-Ani et al., 1985).

Operating Requirements

Operating considerations for direct filtration plants are essentially identical to those for conventional treatment plants. The major difference is that a direct filtration plant will not have a clarifier, and may or may not have a flocculation or contact basin. In addition, EPA recommends that all direct filtration plants, both new and existing, be required to make provisions to minimize the break-in time of a filter being put on-line.[11]

As with conventional treatment, the initiation of backwashing a filter should first be based on filter effluent turbidity values, then by headloss and run time. Effluent turbidity monitoring equipment should be set to initiate filter backwash at an effluent value of 0.5 NTU or less, in order to meet filtered water quality requirements. Also, any filters removed from service should be backwashed upon start-up. In some cases, it may not be practical to backwash filters every time they are removed from service. This decision should be made by the Primacy Agency on a case-by-case basis, based on the same considerations as for conventional systems.

4.3.5 Slow Sand Filtration

Slow sand filters differ from single-media rapid-rate filters in a number of important characteristics. In addition to the difference of flow rate, slow sand filters:

a. Function using biological mechanisms as well as physical-chemical mechanisms

b. Use smaller sand particles

c. Are not backwashed, but rather are cleaned by removing the surface media

d. Have much longer run times between cleaning

---

[11] As with conventional treatment, direct filtration produces a relatively poor quality filtered water at the beginning of filter runs and therefore a filter-to-waste period is recommended. In some cases, the addition of a filter aid or bringing filters on-line slowly will be appropriate (Cleasby et al., 1984).

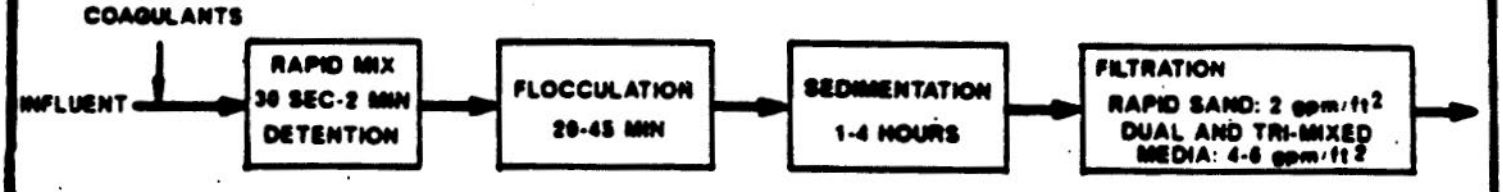

FIGURE 4-1-FLOW SHEET OF A TYPICAL CONVENTIONAL WATER TREATMENT PLANT

SINGLE STAGE SOFTENING [1]

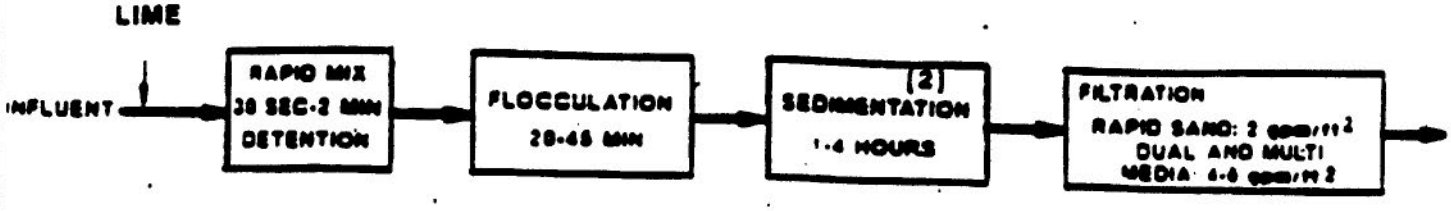

[1] PH RANGE 9-10

[2] OR ALTERNATE SOLIDS REMOVAL PROCESS

TWO STAGE SOFTENING [1]

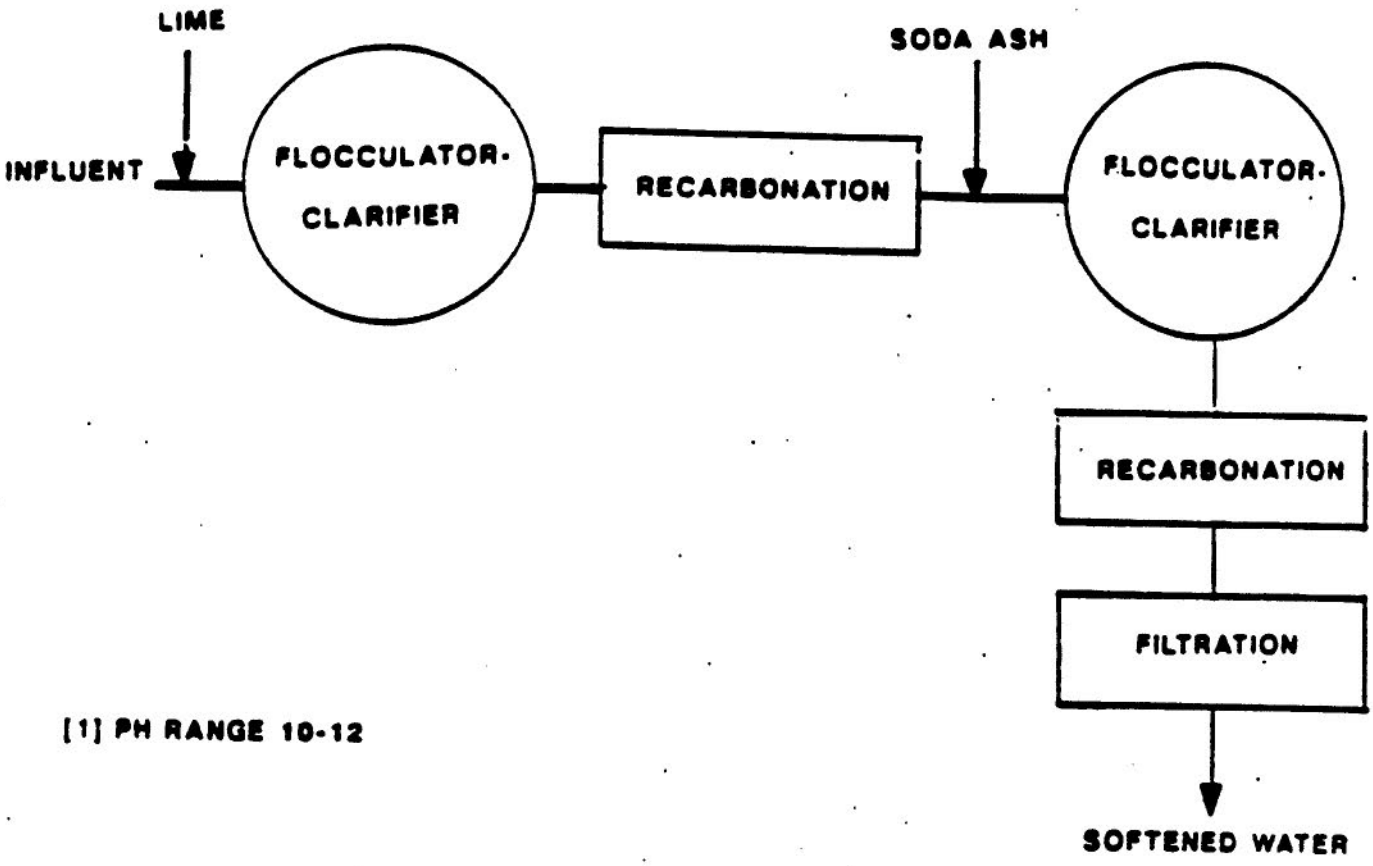

[1] PH RANGE 10-12

FIGURE 4-2-FLOW SHEET OF TYPICAL SOFTENING TREATMENT PLANTS

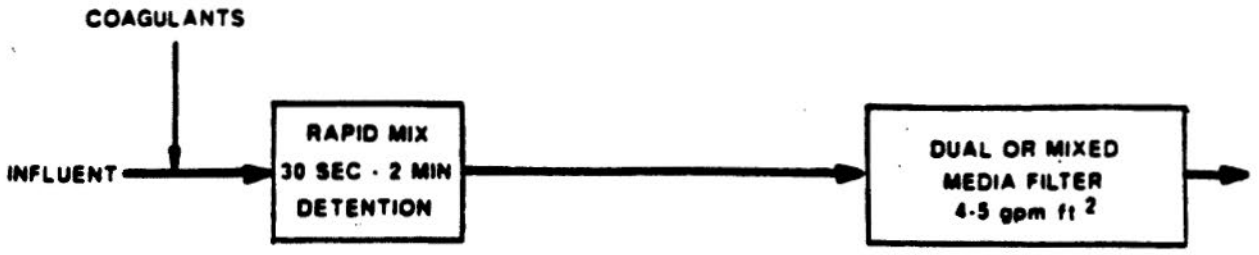

FIGURE 4-3 FLOW SHEET FOR A TYPICAL DIRECT FILTRATION PLANT

FIGURE 4-4-FLOW SHEET FOR A TYPICAL DIRECT FILTRATION PLANT WITH FLOCCULATION

e. Require a ripening period at the beginning of each run

Although rapid rate filtration is the water treatment technology used most extensively in the United States, its use has often proved inappropriate for small communities since rapid-rate filtration is a technology that requires skilled operation by trained operators. Slow sand filtration requires very little control by an operator. Consequently, use of this technology may be more appropriate for small systems where source water quality is within the guidelines recommended in Section 4.2.3.

As indicated in this section, slow sand filtration also may be applicable to other source water quality conditions with the addition of pretreatment such as a roughing filter or presedimentation.

Design Criteria

The minimum design criteria presented in the Ten State Standards for slow sand filters are considered sufficient for the purposes of implementation of the SWTR with the following exceptions:

a. Raw water quality limitations should be changed to reflect the values given in Table 4-2.[12]

b. The effective sand size should be between 0.15mm and 0.35mm rather than the current 0.30 mm to 0.45 mm.[13]

Additional guidance on the design of slow sand filtration is available in the design manual entitled Slow Sand Filtration for Community Water Supplies Technical Paper 24, 1987 published by the International

---

[12] Without pretreatment, limitations exist in the quality of water that is suitable for slow sand filtration (Logsdon, 1987b; Cleasby et al., 1984; Bellamy et al., 1985; Fox et al., 1983).

[13] Significant decreases in total coliform removals were shown at effective sand sizes less than 0.35 mm (Bellamy et al., 1985). As defined in the AWWA Standard for Filtering Material, effective size is the size opening that will pass 10 percent by weight of a sample of filter material.

Reference Centre for Community Water Supply and Sanitation (IRC), P.O. Box 5500, 2280 HM Rijswijk, the Netherlands.

Operating Requirements

Maintenance of a slow sand filter involves two periodic tasks:

a. Removal of the top 2 to 3 cm (0.8 to 1.2 inches) of the surface of the sand bed when the headloss exceeds 1 to 1.5 m.[14]

b. Replacement of the sand when repeated scrapings have reduced the depth of the sand to approximately one-half of its design depth (Bellamy et al., 1985).

Following scraping, slow sand filters produce poorer quality filtrate at the beginning of a run, and a filter-to-waste or ripening period of one to two days is recommended before use to supply the system. The ripening period is an interval of time immediately after a scraped filter is put back on-line, when the turbidity or particle count results are significantly higher than the corresponding values for the operating filter. During this time, the microorganisms multiply and attain equilibrium in the "schmutzdecke." Filter effluent monitoring results should be used to determine the end of the ripening period. For example, a turbidimeter could be set at 1.0 NTU or less to initiate start of the filter run.

When repeated scrapings of the sand have reduced the depth of the sand bed to approximately one-half of its design depth, the sand should be replaced. Filter bed depths of less than 0.3 to 0.5 m (12 to 20 inches) have been shown to result in poor filter performance (Bellamy et al., 1985). The replacement procedure should include removal of the remaining sand down to the gravel support, the addition of new sand to one half of the design depth and placement of the sand previously removed on top of the new sand.[15]

---

[14] Removal of this top layer of the "Schmutzdecke" should restore the filter to its operational capacity and initial headloss.

[15] This procedure results in clean sand being placed in the bottom half of the filter bed and biologically active sand in the top half reducing the amount of time required for the curing period. It also provides

The amount of time for the biological population to mature in a new sand filter (also called curing) and to provide stable and full treatment varies. The World Health Organization (1980) reported that curing requires a few weeks to a few months. Fox et al., (1983) found that "about 30 days" were required to bring particle and bacterial effluents down to a stable level. All researchers agree that a curing time for a new filter is required before the filter operates at its fullest potential (Bellamy et al., 1985).

4.3.6 Diatomaceous Earth Filtration

Diatomaceous earth (DE) filtration, also known as precoat or diatomite filtration, is appropriate for direct treatment of surface waters for removal of relatively low levels of turbidity and microorganisms.

Diatomite filters consist of a layer of DE about 3 mm (1/8 inch) thick supported on a septum or filter element. The thin precoat layer of DE must be supplemented by a continuous body feed of diatomite, which is used to maintain the porosity of the filter cake. If no body feed is added, the particles filtered out will build up on the surface of the filter cake and cause rapid increases in headloss. The problems inherent in maintaining the proper film of DE on the septum have restricted the use of diatomite filters for municipal purposes, except under certain favorable raw water quality conditions, i.e., low turbidity and good bacteriological quality. Specific upper limits of raw water quality parameters are not well-defined because diatomaceous earth filtration performance depends on the nature, as well as the concentration, of the raw water particles and the grades of diatomite employed. Logsdon (1987b) reported that filtered water turbidities above 1 NTU and short filter runs were observed for several diatomaceous earth plants having maximum raw water turbidities above 20 NTU.

---

for a complete exchange of sand over time, alleviating potential problems of excessive silt accumulation and clogging of the filter bed (Bellamy et al., 1985).

Design Criteria

The minimum design criteria presented in the Ten State Standards for diatomaceous earth filtration are considered sufficient for the purposes of compliance with the SWTR with the following exceptions:

a. The recommended quantity of precoat is 1 kg/m^2 (0.2 pounds per square foot) of filter area, and the minimum thickness of the precoat filter cake is 3mm to 5mm (1/8 to 1/5-inch).[16]

b. Treatment plants should be encouraged to provide a coagulant coating (alum or suitable polymer) of the body feed.[17]

Operating Requirements

Operating requirements specific to DE filters include:

- Preparation of body feed and precoat
- Verification that dosages are proper
- Periodic backwashing and disposal of spent filter cake
- Periodic inspection of the septum(s) for cleanliness or damage
- Verification that the filter is producing a filtered water that meets the performance criteria

4.3.7 Alternate Technologies

The SWTR allows the use of filtration technologies other than those specified above provided that the system demonstrates to the Primacy Agency using pilot studies or other means that the filtration technology when combined with disinfection achieves at least 3-log Giardia cyst and 4-log virus removal/inactivation. Such technologies must also meet the turbidity performance criteria for slow sand filtration. Guidance for

---

[16] Studies have shown that a precoat thickness of 1 kg/m^2 (0.2 lbs/ft^2) was most effective in Giardia cyst removal and that the precoat thickness was more important than the grade size in cyst removal (DeWalle et al., 1984; Logsdon et al., 1981; Bellamy et al., 1984).

[17] Although enhancement of the DE is not required for Giardia cyst removal, coagulant coating of the body feed has been found to significantly improve removals of viruses, bacteria and turbidity. (Brown et al., 1974; Bellamy et al., 1984).

conducting pilot studies to demonstrate this effectiveness is provided in Appendix M of this manual.

Reverse osmosis is a membrane filtration method which is used for desalination and/or the removal of organic contaminants. The treatment process is effective for the removal of Giardia cysts and viruses and no demonstration is necessary.

Alternate filtration technologies which are currently available include, but are not limited to:

- Package Plants
- Cartridge Filters

Package plants in principle are not a separate technology from the preceding technologies. However, in many cases they are different enough in design criteria, and operation and maintenance requirements that they should be considered as an alternate technology. The package plant is designed as a factory-assembled, skid-mounted unit generally incorporating a single, or at most, a few process units. A complete treatment process typically consists of chemical coagulation, flocculation, settling and filtration. Package plants generally can be applied to flows ranging from about 25,000 gpd to approximately 6 mgd (USEPA, 1988b). In cases where the Primacy Agency believes that the design criteria of the package plant corresponds to the design criteria of the processes established earlier in this section (i.e., that the package plant qualifies as conventional or direct filtration), the requirement of pilot testing may be waived.

The application of cartridge filters using either cleanable ceramic or disposable polypropylene cartridges to small water systems may be a feasible method for removing turbidity and some microbiological contaminants, such as Giardia cysts although no data are available regarding their ability to remove viruses. Pilot studies are required to demonstrate the efficacy of this technology for a given supply. However, if the technology was demonstrated to be effective through pilot plant studies at one site, then the technology could be considered to be effective at another site which had similar source water quality conditions. Therefore, pilot plant testing at the new site might not be necessary.

It is important to note that the demonstration of achieving the 3-log Giardia cyst and 4-log virus removal/inactivation requirements includes disinfection. Thus, if a cartridge filter is demonstrated to achieve a 3-log removal of Giardia cysts and it is determined by CTs that the disinfection achieves at least a 4-log virus inactivation, the effectiveness of the technology would be demonstrated. The technology must also maintain turbidities less than 1 NTU in 95 percent of the monthly samples. Meeting this turbidity requirement assures a high probability that turbidity will not interfere with disinfection and that the inactivation efficiencies predicted by the CTs are reliable.

Design Criteria

After any necessary pilot studies are conducted and a successful demonstration of performance has been made, design criteria should be established and approved by the Primacy Agency. Eventually, a sufficiently large data base will become available, making it easier to apply the alternate technologies to other water supplies of similar quality.

Operating Requirements

After any necessary pilot studies are conducted and a successful demonstration of performance has been made, operating requirements should be established and approved by the Primacy Agency.

4.3.8 Nontreatment Alternatives

Under certain circumstances, some systems may have other alternatives available. These alternatives include regionalization and the use of alternate sources.

For small water systems which must provide filtration, a feasible option may be to join with other small or large systems to form a regional water supply system. In addition, alternative water sources located within a reasonable distance of a community which would allow the system to meet the requirements of the SWTR and other applicable drinking water regulations, may be developed to provide a satisfactory solution to a community water quality problem. The availability of alternative ground

water sources will depend upon the size and location of the system and the costs involved.

4.4 Disinfection

4.4.1 General

The SWTR requires that disinfection be included as part of the treatment of surface water for potable use. As noted earlier, EPA recommends that the number of treatment barriers be commensurate with the degree of contamination in the source water in accordance with Table 4-2. For example, as indicated in Table 4-2, when the total coliforms in the source water are greater than 5,000/100 ml, conventional treatment with predisinfection is recommended. However, the selection of appropriate disinfection requires consideration of other factors in addition to than those included in Table 4-2. These considerations include:

a. Source water quality and the overall removal/inactivation of Giardia cysts and viruses desired.

b. Likelihood of TTHM formation.

c. Potential need for an oxidant for purposes other than disinfection including control of taste, odor, iron, manganese, color, etc.

4.4.2 Recommended Removal/Inactivation

The SWTR requires a minimum 3-log removal/inactivation of Giardia cysts and a minimum 4-log removal/inactivation of viruses:

a. Well-operated conventional treatment plants which have been optimized for turbidity removal can be expected to achieve at least a 2.5-log removal of Giardia cysts.

b. Well-operated diatomaceous earth, slow sand filtration and direct filtration plants can be expected to achieve at least 2-log removal of Giardia cysts.

EPA recommends that:

a. Conventional filtration systems provide sufficient disinfection to achieve a minimum of 0.5-log Giardia cyst and 2-log virus inactivation.

b. Slow sand filtration systems provide sufficient disinfection to achieve a minimum of 2-log Giardia cyst and 2-log virus inactivation.

c. Systems using diatomaceous earth and direct filtration, or other filtration methods, should provide sufficient disinfection to achieve a minimum of 1-log Giardia cyst and 3-log virus inactivation.

Further guidance on the disinfection level to be provided is contained in Section 5. CT values for achieving these inactivations are presented in Appendix E. As indicated in this Appendix:

a. A comparison of Tables E-1 through E-6 with Table E-7 indicates that systems which achieve a 0.5-log inactivation of Giardia cysts, using free chlorine, will achieve greater than a 4-log inactivation of viruses.

b. Ozone and chlorine dioxide are generally more effective at inactivating viruses than Giardia cysts. However, as indicated in Tables E-8 through E-11, there are some conditions under which the disinfection needed to provide the recommended virus inactivation is higher than that needed for the recommended Giardia cyst inactivation. Therefore, a system using ozone or chlorine dioxide for disinfection must check the CT values needed to provide the recommended inactivation of both Giardia cysts and viruses and provide the higher of the two disinfection levels. Systems may demonstrate their efficiency for overall removal/inactivation using the protocol in Appendices G and M.

c. As indicated in Tables E-12 and E-13, chloramines are much less effective for inactivating Giardia cysts and viruses than the other disinfectants. Also, chloramines may be applied to the system in several ways, either with chlorine added prior to ammonia, ammonia added prior to chlorine or preformed. For systems applying chlorine ahead of ammonia, the required level of disinfection may be determined as follows:

   - determine the CT needed to provide the required inactivation of Giardia and viruses and provide the higher of the two levels or

- follow the protocol in Appendix G to demonstrate effective inactivation to allow lower levels of disinfection.

For systems applying ammonia ahead of chlorine or preformed chloramines, the EPA recommends that the system demonstrate effective virus inactivation according to the protocol in Appendix G, since the CT values for virus inactivation in Table E-13 only apply to the addition of chlorine prior to ammonia.

Although the SWTR requires a minimum of a 3-log removal/inactivation of Giardia cysts and a minimum of a 4-log removal/inactivation of viruses, it may be appropriate for the Primacy Agency to require greater removals/-inactivations depending upon the degree of contamination within the source water.

Rose (1988) conducted a survey of water sources to characterize the level of Giardia cyst occurrence for "polluted" and "pristine" waters. Polluted waters are defined as waters in the vicinity of sewage and agricultural wastes, while pristine waters are those originating from protected watersheds with no significant sources of microbiological contamination from human activities. EPA believes that treatment should be provided to assure less than one case of microbiologically-caused illness per year per 10,000 people. In order to provide this level of protection, 3, 4 or 5-log Giardia cyst removal/inactivation should be provided for the following source water qualities:

Giardia Cyst Removal/Inactivation Required Based[18,19] on Source Water Cyst Concentration

Giardia Inactivation	3-log	4-log	5-log
Allowable daily avg cyst concentration/100 L (geometric mean)	≤1	>1-10	>10-100

[18] Rose, 1988.

[19] 10^{-4} annual risk per person based on consumption of 2 liters of water daily.

According to these guidelines, systems with sewage and agricultural discharges to the source water should provide treatment to achieve an overall 5-log removal/inactivation of Giardia cysts, while the minimum required 3-log removal/inactivation is sufficient for sources with no significant microbiological contamination from human activities. A 4-log removal/inactivation of cysts should be provided for source waters whose level of microbiological contamination is between these two extremes. The location of discharges or other activities polluting the water supply with respect to the location of the intake should also be considered in determining the level of removal/inactivation needed. For instance, long travel times and substantial dilution of a discharge will lessen the impact of the discharge on the intake water quality, in which case less of an increase in the overall treatment recommended above, would be warranted. It is important to note that these levels of treatment for different generalized source water characterizations are presented only as guidelines. The Primacy Agency could develop disinfection requirements based on these or other guidelines. It could also require systems with available resources to conduct raw water monitoring for Giardia cyst concentrations to establish the appropriate level of overall treatment and disinfection needed.

The Primacy Agency may also review the nature of occurrence of Giardia-sized particles in the raw water supply and the association with turbidity occurrence. If it can be demonstrated that a higher degree of removal of particles in the size range of Giardia is accomplished when turbidity levels and associated Giardia levels are elevated, then a log removal credit higher than 3 could be allowed for that particular treatment plant, during such occurrences. This credit should correspond to the log particle removal efficiencies accomplished, as determined by particle counting data, or turbidity data if properly qualified. In all cases, a minimum of 0.5 log reduction of Giardia should be achieved by disinfection in addition to the removal credit allowed for by other treatment.

Until a risk analysis for exposure to viruses is developed, a rough guideline for virus removal/inactivation, can be considered as follows:

a. For a 4-log Giardia cyst removal/inactivation, a 5-log virus removal/inactivation is recommended.

b. For 5-log Giardia removal/inactivation, a 6-log virus removal/inactivation is recommended.

These guidelines assume that virus occurrence in the source water is roughly proportional to Giardia cyst occurrence, and that

- viruses occur at higher concentrations in source waters, or
- are more infectious than Giardia cysts and
- infections from viruses may have more health risk significance than Giardia cysts.

Based on these assumptions, higher levels of protection are warranted.

To meet the levels of inactivation recommended here, significant changes in the system may be required. To avoid changes in the system which may result in conflicts with future regulations, the Primacy Agency may wish to establish interim disinfection levels to provide protection of the public health prior to the promulgation of the disinfection by-product regulations and then reconsider whether these levels are still appropriate after the disinfection by-product regulations are promulgated. Guidance for establishing interim disinfection requirements is provided in Section 5.5.

4.4.3 Total Trihalomethane (TTHM) Regulations

In addition to complying with disinfection requirements, systems must meet the requirements of the TTHM regulations. Currently, this regulation includes an MCL for TTHMs of 0.10 mg/L for systems which serve greater than 10,000 people. EPA expects to issue new regulations with a lower MCL in the near future. These regulations may also pertain to systems serving less than 10,000 people. Therefore, the selection of an appropriate disinfectant or disinfection strategy must include consideration of current and future regulations.

5. CRITERIA FOR DETERMINING IF FILTRATION AND DISINFECTION ARE SATISFACTORILY PRACTICED

5.1 Introduction

Under the SWTR, new and existing filtration plants must meet specified monitoring and performance criteria in order to assure that filtration and disinfection are satisfactorily practiced. These criteria include:

- Turbidity monitoring requirements
- Turbidity performance criteria
- Disinfection monitoring requirements
- Disinfection performance criteria

The overall objective of these criteria is to provide control of: *Giardia* cysts; viruses; turbidity; HPC; and *Legionella* by assuring a high probability that:

a. Filtration plants are well-operated and achieve maximum removal efficiencies of the above parameters.

b. Disinfection will provide adequate inactivation of *Giardia* cysts, viruses, HPC and *Legionella*.

5.2 Turbidity Monitoring Requirements

5.2.1 Sampling Location

The purpose of the turbidity requirements for systems which use filtration is to indicate:

a. *Giardia* cyst and general particulate removal for conventional treatment and direct filtration

b. General particulate removal for diatomaceous earth filtration and slow sand filtration

c. Possible interference with disinfection for all filtration processes

To accomplish the purposes of the turbidity requirements, the SWTR requires that the turbidity samples be representative of the system's

filtered water. The sampling locations which would satisfy this requirement include:

a. Combined filter effluent prior to entry into a clearwell,

b. Clearwell effluent;

c. Plant effluent or immediately prior to entry into the distribution system; or

d. Average of measurements from each filter effluent.

The selection of sampling locations for demonstrating compliance with the turbidity performance criteria is left to the system or the preference of the Primacy Agency.

5.2.2 Sampling Frequency

The turbidity of the filtered water must be determined:

a. At least once every four hours that the system is in operation, or

b. The Primacy Agency may reduce the sampling frequency to once per day for systems using slow sand filtration or filtration treatment other than conventional treatment, direct filtration or diatomaceous earth filtration, if it determines that less frequent monitoring is sufficient to indicate effective filtration performance. For systems serving 500 or fewer people, the Primacy Agency may reduce the sampling frequency to once per day regardless of the type of filtration used if it determines that less frequent monitoring is sufficient to indicate effective filtration performance.

A system may substitute continuous turbidity monitoring for grab sample monitoring if it validates the continuous measurement for accuracy on a regular basis using a protocol approved by the Primacy Agency. EPA recommends that the calibration of continuous turbidity monitors be verified at least twice per week according to the procedures established in Method 214A of the 16th Edition of Standard Methods.[1]

---

[1] Although the 17th Edition of Standard Methods is available, the 16th Edition is referred to in the SWTR. Continuous turbidity monitors must be installed properly to prevent air bubbles from reaching the monitor.

5.2.3 Additional Monitoring

As indicated in Section 4.3.2, EPA recommends that systems equip each filter with a continuous turbidity monitor. This recommendation is not part of the requirements of the SWTR and is not required for establishing compliance. Rather, it is recommended as a tool for systems to use to better monitor their treatment efficiency and to provide a method for detecting a deterioration in filter performance.

If continuous monitoring of each filter effluent cannot be implemented, then EPA recommends that at least the following be conducted on a quarterly basis:

a. Monitor each filter, either by grab samples or continuous monitors, through the course of a routine cycle of operation, i.e.: from restart to backwash

b. Visually inspect each filter where appropriate for indications of physical deterioration of the filter

These are general suggestions. The Primacy Agencies are encouraged to work with the systems to determine the best overall monitoring program(s) for their particular filtration plants in order to assess the status of the filter units. Each filter within a system should be maintained so that each filter effluent meets the turbidity performance criteria for the combined filter effluent (i.e., the turbidity limits specified in the SWTR).

5.3 Turbidity Performance Criteria

The SWTR establishes turbidity performance criteria for each of the filtration technologies. As previously indicated, these criteria provide an indication of:

a. Effective particle and microbial removal

b. Potential for interference with disinfection

In filtration, effective particle removal depends on both physical and chemical factors. The particles to be removed must be transported to the surface of the media and they must attach to the media. When efficient particle removal does not occur, the deterioration of filter

performance can be due to either physical problems with the filters or problems with the treatment chemistry.

Physical problems which can result in a deterioration of filter performance include:

a. Media loss

b. Media deterioration

c. Mud ball formation

d. Channeling or surface cracking

e. Underdrain failure

f. Cross-connections

In addition, the treatment chemistry has a significant impact on filtration. Specifically, effective particle removal is a function of the:

a. Raw water chemistry and the changes induced by the chemicals added

b. Surface chemistry of the particles to be removed

c. Surface chemistry of the media

Consequently, when a filter experiences particle or turbidity breakthrough prior to the development of terminal headloss, the search for alternatives to correct the problem must include not only an evaluation of the potential physical causes but the treatment chemistry as well. Generally this involves an evaluation of one or more of the following:

a. Alternate coagulant type and/or dose

b. Alternate coagulant aid or flocculant aid type and/or dose

c. Need for an alternate oxidant type and/or dose

d. Need for a filter aid or alternate dose

5.3.1 Conventional Treatment or Direct Filtration

The minimum turbidity performance criteria for systems using conventional treatment or direct filtration are:

a. Filtered water turbidity must be less than or equal to 0.5 NTU in 95 percent of the measurements taken every month.

b. Filtered water turbidity levels of less than or equal to 1 NTU in 95 percent of the measurements taken every month may be permitted on a case-by-case basis if the Primacy Agency determines that the system (filtration with disinfection) is capable of achieving the minimum overall performance requirements of 99.9 percent removal/inactivation of Giardia cysts at the higher turbidity level. Such a determination could be based upon an analysis of existing design and operating conditions and/or performance relative to certain water quality characteristics. The design and operating conditions to be reviewed include:

- the adequacy of treatment prior to filtration,
- the percent turbidity removal across the treatment train, and
- level of disinfection.

Water quality analysis which may also be used to evaluate the treatment effectiveness include particle size counting before and after the filter. Pilot plant challenge studies simulating full scale operation may also be used to demonstrate effective treatment. Depending on the source water quality and system size, the Primacy Agency will determine the extent of the analysis and whether a pilot plant demonstration is needed. For this demonstration, systems are allowed to include disinfection in the determination of the overall performance by the system.[2]

c. Filtered water turbidity may not exceed 5 NTU at any time.

The Primacy Agency can assume that conventional treatment plants that are meeting the minimum performance criteria are achieving at least a 2.5-log removal of Giardia cysts and at least a 2-log removal of viruses prior to disinfection.[3]

---

[2] Recommended protocol for this demonstration is presented in Appendix M.

[3] The literature indicates that well operated conventional treatment plants can achieve up to 3-log reduction of Giardia cysts and viruses (Logsdson, 1987b and Roebeck et al., 1962). Limiting the credit to 2.5-logs for Giardia cysts and 2-logs for viruses provides a margin of safety by requiring more disinfection. This is consistent with the

The Primacy Agency can assume that direct filtration plants that are meeting the minimum performance criteria are achieving at least a 2-log removal of Giardia cysts and a 1-log removal of viruses.[4]

Although the minimum turbidity performance criterion allows for a maximum filtered water turbidity of 0.5 NTU, treatment facilities using conventional treatment or direct filtration, whose raw water supplies have turbidity levels of 1 NTU or less, should be encouraged to achieve filtered water turbidity levels of less than 0.2 NTU.[5]

Primacy Agencies may allow systems which believe that they are actually achieving greater than a 2- or 2.5-log Giardia cyst removal to demonstrate the actual removal achieved using the protocol outlined in Appendix M. It is reasonable to expect that systems using conventional treatment for high turbidity source water (e.g., turbidities in excess of 100 NTU), and which optimize chemical treatment prior to filtration, may be achieving a 3-log or greater Giardia cyst removal if their filter effluent is substantially below the 0.5 NTU turbidity limit. Softening plants using conventional processes and 2-stage treatment processes may also achieve a 3-log Giardia cyst removal/inactivation. The high pH of softening may result in inactivation of Giardia cysts and viruses which can be demonstrated according to the protocol outlined in Appendix G. Appendix M can be used to demonstrate the Giardia cyst removal achieved.

---

multiple barrier concept.

[4] Literature indicates that well operated direct filtration plants can achieve up to a 3-log removal of Giardia cysts and up to a 2-log removal of viruses (Logsdon, 1987b; Roebeck et al., 1962). Limiting the credit to 2-log for Giardia cysts and 1-log for viruses provides a margin of safety by requiring more disinfection. This is consistent with the multiple barrier concept.

[5] Research has demonstrated that filter effluent turbidities substantially lower than 0.5 NTU are needed to obtain effective removals of Giardia cysts and viruses with low turbidity source waters (Logsdon, 1987b; Al-Ani et al., 1985).

5.3.2 Slow Sand Filtration

For systems using slow sand filtration, the turbidity performance requirements are:

a. The filtered water turbidity must be less than or equal to 1 NTU in 95 percent of the measurements for each month.

b. At the discretion of the Primacy Agency, a higher filter effluent turbidity may be allowed for well operated plants (Section 4.3.5) on a case-by-case basis, if there is no interference with disinfection and the turbidity level never exceeds 5 NTU. Noninterference with disinfection could be assumed if the finished water entering the distribution system is meeting the coliform MCL and HPC levels are less than 10/ml during times of highest turbidity.

c. Filtered water turbidity may not exceed 5 NTU at any time.

Slow sand filtration plants, with appropriate design and operating conditions and which meet the minimum turbidity performance criteria can be considered to be well operated and achieving at least a 2-log removal of Giardia cysts and 2-log removal of viruses without disinfection.[6] Primacy Agencies may allow systems which believe that they are actually achieving greater than a 2-log Giardia cyst removal to demonstrate the actual removal achieved using the protocol outlined in Appendix M.

5.3.3 Diatomaceous Earth Filtration

For systems using diatomaceous earth filtration, the turbidity performance criteria are:

a. The filtered water turbidity must be less than or equal to 1 NTU in 95 percent of the measurements for each month.

b. The turbidity level of representative samples of filtered water must at no time exceed 5 NTU.

Diatomaceous earth systems, with appropriate design and operating conditions and which meet the minimum turbidity performance criterion can

---

[6] As indicated in Section 4, pilot studies have shown that with proper nurturing of the schmutsdecke, operation at a maximum loading rate of 0.2 m/hr will provide optimum removal of Giardia cysts and viruses (Logsdon, 1987b; Bellamy et al., 1985).

be considered to be well operated and achieving at least 2-log removal of Giardia cysts and at least 1-log removal of viruses without disinfection. Systems which believe that they are actually achieving greater than a 2-log Giardia cyst removal may demonstrate the actual removal achieved using the protocol outlined in Appendix M.

5.3.4 Other Filtration Technologies

The turbidity performance criteria for filtration technologies other than those presented above, are the same as for slow sand filtration. The Giardia cyst removal achieved by these systems must be demonstrated to the Primacy Agency. The protocol outlined in Appendix M may be used as a basis for this demonstration.

Reverse osmosis is a membrane filtration method used to remove dissolved solids from water supplies. Desalination is a typical use of the process. Application to potable water treatment is limited to extremely high quality raw water supplies of low turbidity (1 NTU or less), or following pretreatment to produce a supply of low turbidity.

The membrane excludes particles larger than 0.001 to 0.0001 um range, thereby effectively removing bacteria, Giardia cysts and viruses. Credit can be given for at least a 3-log Giardia cyst and 4-log virus removal, with no demonstration. It should be noted that this removal credit assumes the membranes are in tact with no holes in the membranes allowing the passage of organisms.

5.4 Disinfection Monitoring Requirements

Each system must continuously monitor the disinfectant residual of the water as it enters the distribution system and record the lowest disinfectant residual each day. If there is a failure in the continuous monitoring equipment, the system may substitute grab sample monitoring every 4 hours for up to 5 working days following the equipment failure. Systems serving 3300 people or fewer may take grab samples in lieu of continuous monitoring at frequencies as follows:

System Population	Samples/Day
≤500	1
501-1,000	2
1,001 - 2,500	3
2,501 - 3,300	4

The grab samples must be taken at different times during the day, with the sampling intervals subject to Primacy Agency review and approval. If the residual concentration falls below 0.2 mg/L, the system must take another sample within 4-hours and notify the Primacy Agency as soon as possible, but no later than the end of the next business day, even if the residual is restored to 0.2 mg/L or greater within 4 hours. If the residual is not restored to 0.2 mg/L or greater within 4 hours, the system is in violation of a treatment technique requirement. Each system must also measure the disinfectant residual in the distribution system at the same frequency and locations at which total coliform measurements are made pursuant to the requirements in the revised Total Coliform Rule (54 FR 27544; June 29, 1989). For systems which use both surface and ground water sources, the Primacy Agency may allow substitute sampling sites which are more representative of the treated surface water supply.

5.5 Disinfection Performance Criteria

5.5.1 Minimum Performance Criteria Required by the SWTR

For systems which provide filtration, the disinfection requirements of the SWTR are:

a. Disinfection must be provided to ensure that the total treatment processes of the system (including filtration) achieves at least a 3-log removal/inactivation of Giardia cyst and a 4-log removal/inactivation of viruses. The Primacy Agency must determine what level of disinfection is required for each system to meet this criterion.

b. The system must demonstrate by continuous monitoring and recording that a disinfectant residual in the water entering the distribution system is never less than 0.2 mg/L for more than 4 hours. If at any time the residual falls below 0.2 mg/L for more than 4 hours the system is in violation. The

system must notify the Primacy Agency whenever the residual falls below 0.2 mg/L before the end of the next business day.

c. The system must demonstrate detectable disinfectant residuals or HPC levels of 500 or fewer colonies/ml in at least 95 percent of the samples from the distribution system each month for any two consecutive months.

5.5.2 Recommended Performance Criteria

Disinfection must be applied to assure that the overall treatment provided achieves at least a 3-log removal/inactivation of Giardia cyst and a 4-log removal/inactivation of viruses. As outlined in Section 5.3, well operated filter plants achieve at least a 2 to 2.5-log removal of Giardia cysts and between a 1 to 2-log removal of viruses. EPA therefore recommends that the Primacy Agencies adopt additional disinfection performance criteria that include:

a. As a minimum, primary disinfection requirements that are consistent with the overall treatment requirements of the SWTR, or preferably;

b. Primary disinfection requirements as a function of raw water quality as outlined in Section 4.4.

Recommended Minimum Disinfection

The required minimum primary disinfection is the disinfection needed for the entire treatment process to meet the overall treatment requirement of 3-log Giardia and 4-log virus removal/inactivation. The following table provides a summary of the expected minimum level of treatment performance in well operated filter systems and the recommended level of disinfection.

	Expected Log Removals		Recommended Disinfection (Log Inactivations)	
Filtration	Giardia	Viruses	Giardia	Viruses
Conventional	2.5	2.0	0.5	2.0
Direct	2.0	1.0	1.0	3.0
Slow Sand	2.0	2.0	1.0	2.0
Diatomaceous Earth	2.0	1.0	1.0	3.0

In cases where the system believes that the treatment processes are achieving greater removals than those listed above, the actual removal provided by the processes can be demonstrated through the procedures outlined in Appendix M. However, EPA recommends that, despite the removals demonstrated, systems should provide a minimum of 0.5 log Giardia cyst inactivation to supplement filtration and maintain a second treatment barrier for microorganisms.

Recommended Disinfection as a Function of Raw Water Quality

Although the SWTR requires the overall treatment to provide a minimum of a 3-log Giardia cyst and a 4-log virus removal/inactivation, it may be appropriate for the Primacy Agency to require greater removals/-inactivations depending on the degree of contamination in the source water as presented in Section 4.4. Following is a summary of the recommended overall treatment which should be provided based on an estimate of the Giardia cyst concentration in the source water:

Allowable daily avg cyst concentration/100 L (geometric mean)	≤1	≥1-10	≥10-100
Giardia cyst Removal/Inactivation	3-log	4-log	5-log
Virus Removal/Inactivation	4-log	5-log	6-log

If a slow sand filtration plant must achieve a 4-log removal/inactivation of Giardia cysts and a 5-log removal/inactivation of viruses, and credit for 2-log Giardia cyst and 2-log virus removal by filtration is granted, disinfection for a 2-log Giardia cyst inactivation and 3-log virus inactivation would be needed to meet the overall removal/inactivation. However, Primacy Agencies may allow systems which use particle size analysis outlined in Appendix M to demonstrate greater than a 2-log Giardia cyst removal to provide less than 2-log Giardia cyst inactivation through disinfection.

5.5.3 Disinfection By-Product Considerations

Although the EPA suggests increased levels of disinfection for various source water conditions, a utility should not implement such a change without considering the potential conflict with the requirements of existing or future disinfection by-product regulations. EPA intends to promulgate National Primary Drinking Water Regulations to regulate levels of disinfectants and disinfection by-products when it promulgates disinfection requirements for ground water systems (anticipated in 1992). EPA is concerned that changes required in utilities' disinfection practices to meet the recommended inactivations for the SWTR might be inconsistent with treatment changes needed to comply with the forthcoming regulations for disinfectants and disinfection by-products. For this reason, EPA recommends that Primacy Agencies exercise discretion, sensitive to potential disinfection by-product concerns, in determining the level of disinfection needed for filtered systems to meet the overall treatment requirements specified in the rule or recommended based on source water quality.

Until the promulgation of the disinfection by-product regulation, EPA recommends that the Primacy Agency allow more credit for Giardia cyst and virus removal by filtration than otherwise recommended if a) the Primacy Agency determines that a system is not currently at a significant risk from microbiological contamination at the existing level of disinfection and b) less stringent interim disinfection conditions are necessary for the system to modify its disinfection process to optimally achieve compliance with the SWTR as well as the forthcoming disinfection by-product regulations. The following paragraphs outline the recommended disinfection levels for systems meeting the above conditions.

For well-operated conventional filtration plants that meet the minimum turbidity requirements at all times, the Primacy Agency may consider giving the system credit for 3-log Giardia cyst removal (in lieu of the generally recommended 2.5-log credit). Also, for well-operated direct filtration plants, the Primacy Agency may consider giving the system credit for 2.5-log Giardia cyst removal in lieu of the generally

recommended 2.0-log credit. EPA recommends that these additional credits be given for conventional or direct filtration only if:

a. The total treatment train achieves 1) at least 99 percent turbidity removal, or filtered water turbidities are consistently less than 0.5 NTU, whichever is lower,[7] or 2) a 99.9 percent removal of particles in the size range of 5 to 15 um is demonstrated as outlined in Appendix M;[8] and

b. The level of heterotrophic plate count (HPC) bacteria in the finished (disinfected) water entering the distribution system is consistently less than 10/ml.

Systems using slow sand filtration or diatomaceous earth filtration may be given interim credit for up to 3-log Giardia cyst removal if the system meets the recommended conditions listed above for conventional systems. Pilot plant studies have demonstrated that these technologies, when well operated, generally achieve at least 3.0-log removals (USEPA, 1988a).

The EPA believes that interim level of disinfection requirements may be appropriate in some cases depending upon source water quality, reliability of system operation and potential increased health risks from disinfection by-products. EPA intends to regulate disinfectants and disinfection by-products in 1992. At this time it will become apparent how systems with disinfection by-product problems can optimally meet the disinfection requirements of the SWTR and the disinfection by-products regulations, concurrently.

---

[7] For example, a system with a raw water turbidity averaging 20 NTU maintaining a filtered water turbidity less than 0.2 NTU can be granted 3-log Giardia cyst removal credit with no further demonstration.

[8] In cases where the Primacy Agency has a data base which shows a correlation between turbidity and Giardia cysts removal, turbidity may be used in lieu of particle size analysis. Turbidity removal requirements should be set to assure 99.9 percent Giardia cyst removal. A correlation between turbidity and Giardia cyst removal was shown in a study reported by Hendricks et al (1984).

5.5.4 Recommended Disinfection System Redundancy

The SWTR does not require a redundant disinfection system for filtered supplies. However, in order to assure the continuous provision of disinfection to meet the overall removal/inactivation requirements and to maintain a residual entering the distribution system, EPA recommends that redundant disinfection equipment be provided. As contained in the 1987 edition of Ten State Standards, where disinfection is required for protection of the supply, standby equipment is required. Automatic switchover should be provided as needed, to assure continuous disinfectant application.

Recommendations for providing redundant disinfection are outlined in Section 3.2.4 and detailed in Appendix I.

5.5.5 Determination of Inactivation by Disinfection

The desired level of inactivation can be achieved by disinfection at any point in the treatment or distribution system prior to the first customer. Disinfection provided prior to filtration is referred to as pre-disinfection while disinfection after filtration is referred to as post-disinfection. As presented in Section 3.2, the inactivation of Giardia cysts and viruses provided by disinfection are indicated by CT values.

The SWTR defines CT as the residual disinfectant concentration(s) in mg/L multiplied by the contact time(s) in minutes. The contact time is measured from the point of disinfectant application to the point of residual measurement or between points of residual measurement. The inactivation efficiency can be determined by calculating CT at any point along the process after disinfectant application prior to the first customer.

A system may determine the inactivation efficiency based on one point of residual measurement prior to the first customer, or on a profile of the residual concentration after the point of disinfectant application. The residual profile is generated by monitoring the residual at several points between the point(s) of disinfectant application and the first customer. The system can then use the method described in Section 3.2 for determining the total inactivation credit. Profiling the residual allows

for credit of significantly higher residuals which may exist before the water reaches the first customer. Methods for determining various disinfectant residuals are described in Appendix D.

In pipelines, the contact time can be assumed equivalent to the hydraulic detention time and is calculated by dividing the internal volume of the pipeline by the peak hourly flow rate through the pipeline. In mixing basins and storage reservoirs, the hydraulic detention time generally does not represent the actual disinfectant contact time because of short circuiting. The contact time in such chambers should be determined by tracer studies or an equivalent demonstration. The time determined from the tracer study to be used for calculating CT is T_{10}. T_{10} represents the time that 90 percent of the water (and microorganisms within the water) will be exposed to disinfection within the disinfectant contact chamber. Guidance for determining detention time in contact chambers is provided in Appendix C.

The residual disinfectant concentration should be measured daily, during peak hourly flow, for each disinfectant section prior to the first customer in the distribution system. Unless a system knows from experience when peak flow will occur, a system can only identify peak hourly flow after it has occurred. Therefore, EPA suggests that residual measurements be taken every hour. If it is not practical to take grab samples each hour, the system may take grab samples during the period peak flow is expected to occur, or continuous monitors may be used. The measurements taken during the hour of peak flow can then be used to determine the CT for each section (CT_{calc}). The determination of CTs is explained in Section 3.2.1.

Although the inactivation maintained in the system is determined during peak hourly flow, the disinfectant dosage applied to maintain this inactivation may not be necessary under lower flow conditions. Under lower flow conditions, a higher contact time is generally available and the CT needed to meet the required inactivation may be met with a lower residual concentration. Continuing to apply a disinfectant dosage based on the peak hourly flow may provide more disinfection than is needed, increasing costs and possibly resulting in increased levels of disinfectant by-products. However, the system should also maintain the required

inactivation levels at non-peak hourly flows. The system should therefore evaluate the dose needed to provide the CT necessary for maintaining the required inactivation under different flow conditions and set the dosage accordingly. The following example provides guidelines for determining flow ranges and disinfection levels to maintain the required disinfection.

Example

A 20-mgd direct filtration plant applying free chlorine as a disinfectant has a contact time of 27.5 minutes under peak flow conditions. As noted in Section 5.3, well-operated direct filtration plants achieve 2-log Giardia cyst removal and 1-log virus removal. Therefore, disinfection for 1-log Giardia cyst inactivation and 3-log virus inactivation is recommended. The pH and temperature of the water are 7 and 5 C, respectively. Using Table E-2, a CT of 55 is required to achieve 1-log Giardia cyst inactivation at a residual of 2 mg/L. This level of treatment is more than adequate for 3-log inactivation of viruses requiring a CT of 6, as indicated in Table E-7. However, under low flow conditions the available contact time is longer, and lower residuals are needed to provide the same level of inactivation. Based on the calculated contact time under various flow rates and the CT values in Table E-2, adequate disinfection would be provided by maintaining the following chlorine residuals for the indicated flows:

Flow (MGD)	Contact the (min)	CT90 (mg/L-min) Required	Free Chlorine Residual (mg/L)
20	27.5	55	2.0
15	36	52.5	1.5
10	54	50	1.0
5	108	47	0.5

CT_{90} corresponds to a 1-log inactivation. If a different level of inactivation were needed, CT values for that inactivation would be read from the tables corresponding to the pH and temperature of the water.

- Section 3.2.2 lists the percent inactivations corresponding to log inactivations, i.e., 0.5-log equals 68 percent requiring CT_{68}.

- In cases where the residual, pH or temperature of the water is an intermediate value not reported in the tables, linear (straight-line) interpolation may be used.

- For example, in the above listing, 0.5 mg/L residuals are not included in the Appendix E tables. The CT_{99} value was determined by interpolating between the ≤0.4 mg/L value of 46 mg/L-min and the 0.6 mg/L value of 48 mg/L-min.

- CT values for intermediate pH and temperature values may also be interpolated; or

- The CT values for the higher pH or lower temperature listed in the table may be used instead of interpolation.

- $CT_{99.9}$ tables in the SWTR can be used to calculate the CT required to achieve any log inactivation by:

$$CT_{required} = \frac{\text{log inactivation required}}{3.0 \text{ log}} \times CT_{99.9}$$

The variation in CT required with respect to the residual for chlorine makes it impractical for the utility to continually change the disinfectant dose as the flow changes. Therefore, EPA suggests that the flow variation at the utility be divided into ranges and the residual needed at the higher flow of the range be maintained for all flows within the range to assure adequate disinfection. The following flow ranges and residuals at the given pH and temperature are suggested for this plant:

Flow Range (MGD)	Free Chlorine Residual (mg/L)
5-10	1.0
10-15	1.5
15-20	2.0

In this way, the utility is assuring the provision of the required disinfection while minimizing the disinfectant costs and possibly lowering disinfection by-products.

Although these residuals will meet the required CT, maintaining a residual in the distribution system must also be considered. If there is no other point of disinfection prior to the distribution system, the residual for disinfection must be maintained at a level which will also

provide a residual throughout the distribution system. The complete range of flows occurring at the plant should be evaluated for determining the required residual. The utilities may establish the residual needs for as many flow ranges as is practical.

The Primacy Agency should make periodic checks to assure that the utility is maintaining adequate disinfection at both peak and non-peak flow conditions.

In contrast to this close control of disinfectant addition and CT monitoring, for filtered systems which have long detention times and regularly exceed the CT requirements for the inactivation needed, it may be unnecessary for the system to calculate CTs each day of operation. Unlike unfiltered systems where CTs must be calculated each day, for filtered systems, monitoring the residual at the end of the contact time may be sufficient to indicate that the required disinfection is provided. However, this results in much higher CTs in the summer than is needed, which adds to costs and possibly unnecessary increased production of disinfection by-products. The following example outlines one scenario for which this would apply.

Example

A utility disinfects with chlorine ahead of a reservoir prior to direct filtration. The Primacy Agency may give a well-operated direct filtration plant credit for 2-log Giardia cyst removal and 1-log virus removal. Therefore, 1-log Giardia cyst and 3-log virus inactivation through disinfection is needed. For free chlorine, the CTs for 1-log Giardia cyst inactivation exceed the CTs for 3-log virus inactivation. Therefore, CTs for Giardia cyst inactivation are the controlling CTs. The following water quality conditions occur in the reservoir during the year:

pH	7 - 7.5
Temperature (° C)	5 - 20
Chlorine residual (mg/L)	0.2 - 0.8

The required CT for chlorine increases with:

- increasing residual,
- increasing pH, and
- decreasing temperature

Thus, for a residual of 0.8 mg/L the CT needed for a 1-log Giardia cyst inactivation is as follows:

pH	Temperature (C)	CT_{99} mg/L-min
7.5	5	58 (Table E-2)
7	20	18 (Table E-5)

Tracer studies conducted on the reservoir indicated a T_{10} of 150 minutes at the system's maximum flow. For the maximum CT of 58 mg/L-min required, the minimum residual needed to meet this requirement is 0.4 mg/L, calculated as:

$$\frac{58 \text{ mg/L-min}}{150 \text{ min}} = 0.4 \text{ mg/L}$$

At a residual of 0.4 mg/L, CT_{99} is 55 mg/L-min. Thus, any residual $\geq$0.4 mg/L will provide the needed disinfection throughout the year and the Primacy Agency may require the system to report only the residual maintained, reducing the effort needed to determine effective disinfection. Maintaining this residual in the summer, however, provides much higher CTs than needed, possibly resulting in unnecessary costs and increased disinfection by-products.

Meeting the Recommended Inactivation Using Free Chlorine

As previously indicated in Section 3.2.1, the effectiveness of free chlorine as a disinfectant is influenced by both the temperature and pH of the water and by the concentration of chlorine. The inactivation of Giardia cysts by free chlorine at various temperatures and pHs are presented in Appendix E (Table E-1 through Table E-6). The CT values for the inactivation of viruses by free chlorine are presented in Table E-7.

To determine whether a system is meeting these inactivations, the free chlorine residual, pH and temperature must be measured, at one point or several points prior to the first customer, where contact time(s) is measured. The contact time should be determined from the point of application of the disinfectant to the point(s) where the residual is measured for determining CTs prior to the first customer. The CTs

actually achieved in the system should then be compared to the values in the table for the pH and temperature of the water at the point(s) of residual measurement. Guidance on calculating the CT for chlorine is presented in Section 3.2.1.

Meeting the Recommended Inactivation Using Chlorine Dioxide

CT values for the inactivation of Giardia cysts by chlorine dioxide are presented in Table E-8 and the CT values for the inactivation of viruses are presented in Table E-9. As shown in Tables E-8 and E-9, the only parameter affecting the CT requirements for chlorine dioxide is temperature. However, the disinfection efficiency of chlorine dioxide may be significantly increased at higher pHs. Since the CT values in Tables E-8 and E-9 were based on data at pH 7 and 6, respectively, and chlorine dioxide appears to be more effective at higher pHs, systems with high pHs may wish to demonstrate that CT values lower than those presented in Tables E-8 and E-9 may achieve the desired level of inactivation.

Chlorine dioxide residuals are short-lived. Therefore, sampling and residual analysis at various points in the treatment process downstream of the point of application may be necessary to establish the last point at which a residual is present. Subsequent sampling and residual analyses conducted upstream of this point can be used to determine the CT credit by using the demonstrated detention time between the point of application and the sampling location. Methods for calculating CT values are presented in Section 3.2. Systems using chlorine dioxide may conduct pilot studies to demonstrate effective disinfection in lieu of calculating CT, or for determining that lower CT values than those in Appendix E are appropriate. Guidelines for conducting these studies are presented in Appendix G.

Meeting the Recommended Inactivation using Ozone

CT values for the inactivation of Giardia cysts by ozone are presented in Table E-10 for various temperatures and inactivation rates. As indicated in this table, the CTs required for inactivation with ozone are substantially lower than those required for free chlorine. This reflects the fact that ozone is a more powerful disinfectant. The CT requirements for inactivation of viruses using ozone are presented in Table E-11. In cases where only a 1-log or lower Giardia cyst inactivation is needed, the CT values for virus inactivation may be higher than

the CTs for Giardia cysts. Because of the reactivity of ozone, it is unlikely that a residual will exist for more than a few minutes. As a result, the application of a persistent disinfectant such as chlorine or chloramines is needed to maintain the required disinfectant residual in the distribution system. Guidance for calculating CT values for ozone are presented in Section 3.2.1 and Appendix O. In lieu of calculating the CT for an ozone contactor or demonstrating that lower CTs are effective, the disinfection efficiency can be demonstrated through pilot studies as presented in Appendix G.

Meeting the Recommended Inactivation Requirements using Chloramines

CT values for the inactivation of Giardia cysts by chloramines are presented in Table E-12. The high CT values associated with the use of chloramines may be unachievable for some systems. In these cases, chlorine, ozone, or chlorine dioxide should be used for primary disinfection, and chloramines for residual disinfection, as necessary. Table E-13 presents CT values for the inactivation of viruses with chloramines. This table is only applicable for indicating virus inactivation efficiencies if chlorine is added prior to ammonia. Systems which add ammonia prior to chlorine or ammonia and chlorine concurrently, can determine viral inactivation efficiencies using the protocol given in Appendix G. For systems applying chloramines to meet the virus inactivation requirements, EPA recommends that they also monitor for HPC in the finished water, as presented in Section 5.6. Systems also may demonstrate effective disinfection with chloramines in lieu of calculating CT, or to determine that lower CT values than those indicated in Appendix E are appropriate. The protocols outlined in Appendix G can be used for this demonstration. Further guidance on chloramines is given in Section 3.2.1.

Meeting the Inactivation Requirement
Using Ultraviolet (UV) Radiation

Ultraviolet radiation is a method of disinfection which can be applied to meet the virus inactivation requirements of the SWTR.

UV disinfectant dose, expressed in terms of UV intensity and exposure time/unit area (mW-sec/cm^2) incorporates the elements of the CT concept and therefore can be considered as analogous or equivalent to a CT value. UV disinfection usually employs commercially available units

designed to deliver doses of 25 to 35 mW-sec/cm^2. The dose can be increased by reducing water flow rate and/or by adding additional units in series. UV disinfection efficiency differs from that of chemical disinfectants in that it is not affected by water temperature. UV radiation does not effectively penetrate solids and is absorbed by certain dissolved substances. Therefore, turbidity and other water quality factors are important determinants of UV disinfection efficiency, and UV should be applied after turbidity removal.

CT values for the inactivation of Giardia cysts by UV are not included in Appendix E. The results of two studies (Rice and Hoff, 1981; Carlson et al, 1985) indicate that Giardia cysts are extremely resistant to inactivation by UV with doses greater than 60 mW-sec/cm^2 causing less than 80% inactivation. Because UV appears to be very ineffective for Giardia cyst inactivation and in the absence of sufficient data showing the doses needed to inactivate 0.5 to 3.0 logs of cysts, UV must be used in combination with other disinfectants to provide evidence of effective cyst inactivation.

CT values for the inactivation of viruses by UV are presented in Table E-14. Units used for UV disinfection should be equipped with fail-safe devices that will provide automatic shutdown of water flow if UV dose decreases to levels lower than those specified in Table E-14.

Meeting the Inactivation Requirement Using Alternate Disinfectants

For system using disinfectants other than chlorine, chloramines, chlorine dioxide, or ozone, the effectiveness of the disinfectant can be demonstrated using the protocol contained in Appendix G. The protocol in Appendix G.3 for batch testing should be followed for any disinfectant which can be prepared in an aqueous solution and will be stable throughout the testing. For disinfectants which are not stable, the pilot study protocol outlined in Appendix G.4 should be followed.

Examples for Determining the Disinfection to be Provided

1) Recommended 0.5-log Giardia, 2-log Virus Inactivation

A community of 70,000 uses a river as its drinking water source. Ozonation prior to a conventional treatment plant is used to treat the

water. The source has a protected watershed with limited human activity and no sewage discharge. The river water has the following water quality characteristics:

Turbidity	10 - 200 NTU
Total estimated Giardia cyst level	<1/100 /L
pH	7.0 - 7.5
Temperature	5 - 15

The treatment plant has a design capacity of 15 mgd and treats an average flow of 10 mgd. A three chamber ozone contactor precedes the rapid mix. Alum and polymer are added as a coagulant and coagulant aid, respectively. The finished water turbidity at the plant is maintained within the range of 0.1 to 0.2 NTU. Chloramines are applied after the filters, but prior to the clearwells, to maintain a residual entering and throughout the distribution system.

Based on the raw water quality and source water protection, an overall 3-log Giardia cyst and 4-log virus removal/inactivation is appropriate for this water source. However, as noted in Section 5.3, Primacy Agencies may credit well operated conventional filtration plants with 2.5-log Giardia cyst removal and 2-log virus removal. Therefore, disinfection for 0.5-log Giardia cysts and 2-log viruses is recommended to meet the overall treatment requirements of the SWTR.

On the day of this example calculation, the peak hourly flow rate of the plant was 13 mgd. The contact time of the ozone basin, T_{10} determined from tracer study data is 6 minutes for this flow. The water had a pH of 7 and a temperature of 5 C on the day of the calculation. For ozone under these conditions of pH and temperature, the following CTs are needed for the required inactivation (Tables E-10, E-11):

	0.5-log Giardia	2-log virus
CT	0.3	0.6

The CT values indicate that viruses are the controlling parameter for disinfection and the overall inactivation provided will be calculated based on viruses. The overall virus inactivation provided by the ozone contactor is determined as follows:

Average

Chamber	Residual C (mg/L)	T_{10} (minutes)	CT_{calc} (mg/L)	$CT_{99.9}$ (mg/L-min.)	$CT_{calc}/CT_{99.9}$
1	0.1	2	0.2	0.9	0.22
2	0.2	2	0.4	0.9	0.44
3	0.2	2	0.4	0.9	0.44

The sum of $CT_{calc}/CT_{99.9}$ is 1.1. This corresponds to more than a 3-log virus inactivation determined as 3 X $CT_{calc}/CT_{99.9}$ = 3 X 1.1 = 3.3-log. Therefore, the system exceeds the recommended inactivation.

2) Recommended 1-log Giardia Cyst, 2-log Virus Inactivation

A 2 MGD slow sand filtration plant treating reservoir water, fed by mountain streams with no nearby wastewater discharges, provides drinking water for a community of 8,000 people. The water quality at the intake has the following water quality characteristics:

Turbidity	5 - 10 NTU
Total coliforms	Not measured
Total estimated Giardia cyst level	<1/100 L
pH	6.5 - 7.5
Temperature	5 - 15 C

The filtered water turbidity ranges from 0.6 - 0.8 NTU. Considering the source water quality and plant performance, an overall 3-log Giardia cyst and 4-log virus removal/inactivation is considered sufficient for this system. As noted in Section 5.3, the Primacy Agency may credit slow sand plants with 2-log Giardia cyst and 2-log virus removal. Therefore disinfection for 1-log Giardia cyst and 2-log virus inactivation is recommended for the system to meet the overall treatment requirements.

Chlorine is added prior to the clearwells to provide disinfection. The clearwells have a capacity of 80,000 gallons. A one mile, 16-inch transmission main transports the water from the treatment plant to the first customer. The inactivation provided is determined daily for the peak hourly flow conditions. Tracer studies have been conducted to determine the T_{10} for the clearwells for different flow rates. For the purposes of calculating the inactivation the system is divided into two sections.

Section 1 - clearwell

Section 2 - transmission main

The flowrate at peak hourly flow from the clearwell was 1.5 mgd on the day of this example. At this flowrate, the T_{10} of the clearwell is 67 minutes, as determined from the results of the tracer studies. At this flowrate, water travels through the transmission main at 99 ft/min. The data for the calculation of the inactivation is as follows:

	Section 1	Section 2
length of pipe (ft)	0	5280
contact time (min)		
pipe	0	53
basin	67	0
total	67	53
disinfectant	chlorine	chlorine
residual (mg/L)	1.0	0.6
temperature C	5	5
pH	7.5	7.5

For free chlorine, a 1-log Giardia cyst inactivation provides greater than a 4-log virus inactivation; therefore, Giardia cyst inactivation is the controlling parameter, and the inactivation provided is determined based on Giardia cysts. The calculation is as follows:

Section 1 - Chlorine

CT_{calc} = 1.0 mg/L x 67 minutes = 67 mg/L-min

From Table E-2, at a temperature of 5 C and a pH of 7.5, $CT_{99.9}$ is 179 mg/L-min

$$CT_{calc}/CT_{99.9} = \frac{67 \text{ mg/L-min}}{179 \text{ mg/L-min}} = 0.37$$

Section 2 - Chlorine

CT_{calc} = 0.6 mg/L x 53 minutes = 32 mg/L-min

From Table E-2, at a temperature of 5 C and a pH of 7.5, $CT_{99.9}$ is 171 mg/L-min

$$CT_{calc}/CT_{99.9} = \frac{32 \text{ mg/L-min}}{171 \text{ mg/L-min}} = 0.19$$

The sum of $CT_{calc}/CT_{99.9}$ is equal to 0.56. This is equivalent to a 1.7-log Giardia cyst inactivation determined as 3-log x $CT_{calc}/CT_{99.9}$ = 3 x 0.56 =

1.7-logs. Therefore, the system exceeds the disinfection recommended to meet the overall treatment requirements.

3) Recommended 2-log Giardia Cyst, 4-log Virus Inactivation

A community of 30,000 people uses a reservoir treated by direct filtration for its water supply. The reservoir is fed by a river which receives the discharge from a wastewater treatment plant 10 miles upstream of the reservoir. The reservoir water quality is as follows:

Turbidity	5 - 15 NTU
Total coliforms	100 - 1000/100 ml
Total estimated Giardia cyst level	5/100 L
pH	6 - 7
Temperature	5 - 15 C

Based on the source water quality, an overall removal/inactivation of 4-log Giardia cyst and 5-log virus is recommended as outlined in Section 4.4.

The source water flows by gravity to a 3 MG storage reservoir prior to pumping to the water treatment plant. Chloramines are produced by first adding chlorine then ammonia to the water within the inlet of the storage reservoir. Chlorine dioxide is added to the filtered water prior to the clearwells. Chloramines are applied after the clearwells to maintain a residual in the distribution system. The system design flow is 8 mgd with an average flow of 5 mgd. For the calculation of the overall inactivation, the system is divided into 2 sections.

Section 1 - the storage reservoir and the transmission to the treatment plant

Section 2 - the clearwells

The overall inactivation for the system is computed daily at the peak hourly flow conditions. The pH, temperature, and disinfectant residual is measured at the end of each section prior to the next point of disinfectant application and the first customer. The flow is measured in the transmission main entering the plant and exiting the clearwells. On the day of this example calculation, the peak hourly flow was 6 mgd in the transmission mains entering and leaving the plant. If the flowrates were different, the T_{10} corresponding to the respective flowrate would be used

in the calculation. Guidance for determining CTs when flowrates vary within a system is given in Section 3.2. The water velocity through the 20-inch transmission main is 256 ft/min at a flow of 6 mgd. Tracer studies were conducted on the storage reservoir and clearwells. As determined from the testing the detention times, T_{10}, of the basins at a flow of 6 mgd are 380 and 130 minutes for the storage reservoir and clearwells, respectively. The data for the calculation of inactivation is as follows:

	Section 1	Section 2
length of pipe (ft)	4500	0
contact time (min)		
pipe	18	0
basin	380	130
total	398	130
disinfectant	chloramines	chlorine dioxide
residual (mg/L)	1.5	0.2
temperature C	5	5
pH	7	7

For each of the disinfectants used, the following CTs are needed for 2-log Giardia and 4-log virus inactivation for the pH and temperature conditions of the system.

	CT for 2-log Giardia	CT for 4-log Virus
chloramines	1430	1988
chlorine dioxide	17	33.4

The CT required for the virus inactivation is higher than that needed for Giardia inactivation for each of the disinfectants. Since the viruses are the controlling parameter, the inactivation calculation will be based on the viruses. The calculation is as follows:

Section 1 - Chloramines

CT_{calc} = 1.5 mg/L x 398 minutes = 597 mg/L-min

From Table E-13, at a temperature of 5 C and a pH of 7, $CT_{99.99}$ is 1988 mg/L-min

$CT_{calc}/CT_{99.99} = \frac{597 \text{ mg/L-min}}{} = 0.3$

1988 mg/L-min

Section 2 - Chlorine Dioxide

CT_{calc} = 0.2 mg/L x 130 minutes = 26 mg/L-min

From Table E-9, at a temperature of 5 C and a pH of 7, $CT_{99.99}$ is 33.4 mg/L-min

$$CT_{calc}/CT_{99.99} = \frac{26 \text{ mg/L-min}}{33.4 \text{ mg/L-min}} = 0.78$$

The sum of $CT_{calc}/CT_{99.99}$ is equal to 1.08, which is equivalent to a 4.3-log inactivation of viruses, determined as follows:

$$x = 4\text{-log} \times \frac{CT_{calc}}{CT_{99.99}} = 4 \times 1.08 = 4.3\text{-logs}$$

Therefore, the system provides sufficient disinfection to meet the overall recommended treatment performance.

5.6 Other Considerations

Monitoring for heterotrophic plate count (HPC) bacteria is not required under the SWTR. However, such monitoring may provide a good operational tool for:

- Measuring microbial breakthrough
- Evaluating process modifications
- Detecting loss of water main integrity
- Detecting bacterial regrowth conditions within the distribution system
- Determining interference with the coliform measurements (AWWA, 1987)

Therefore, EPA recommends routine monitoring for HPC in the plant effluent and within the distribution system whenever the analytical capability is available in-house or nearby. Systems which do not have this capability should consider using a semi-quantitative bacterial water sampler kit, although this is not acceptable for compliance monitoring.

As discussed in the preamble to the SWTR, EPA believes that it is inappropriate to include HPC as a treatment performance criterion in the rule since small systems would not have in-house analytical capability to conduct the measurement, and they would need to send the samples to a private laboratory. Unless the analysis is conducted rapidly, HPC may multiply and the results may not be representative.

EPA recommends an HPC level of less than 10/ml in the finished water entering the distribution system and levels of less than 500/ml throughout the distribution system.

Legionella is another organism which is not included as a treatment performance criterion. Inactivation information on Legionella is limited. EPA believes that treatment which complies with the SWTR will remove and/or inactivate substantial levels of Legionella which might occur in source waters, thereby reducing chances that Legionella will be transported through the system and reducing the possibility that growth might occur in the distribution system or hot water systems within homes and institutions. Since Legionella are similar in size to coliform organisms, removals by filtration should be similar to those reported for total coliforms. In addition, the available disinfection information indicates that the CT requirements for inactivation of Legionella are lower than those required for the inactivation of Giardia cysts. EPA recognizes, that regardless of the treatment provided, some Legionella may enter plumbing and air conditioning systems and subsequently multiply (Muraca et al., 1986). EPA believes that these concerns are best addressed through guidance contained in Appendix B.

6. REPORTING

6.1 Reporting Requirements for Public Water Systems Not Providing Filtration

The SWTR requires unfiltered systems to prepare monthly reports for the Primacy Agency to determine compliance with the requirements for:

- source water fecal and/or total coliform levels
- source water turbidity levels
- disinfection level
- disinfectant residual entering the distribution system
- disinfectant residuals throughout the distribution system.

The monthly reports must be prepared and submitted to the Primacy Agency within 10 days after the end of the month. The utility must maintain a daily or monthly data log used to prepare the monthly reports. Tables 6-1 through 6-5 are examples of daily data sheets which the utilities may find useful for logging the data needed to prepare reports for the Primacy Agency.

Table 6-6 presents a concise format which can be used by the system for the monthly reports to the Primacy Agency. Tables 6-3 and 6-4 must also be submitted with the monthly report. After the initial 12 months of reporting, the Primacy Agency may remove the requirement for reporting the information contained in Table 6-3 if it is satisfied that the system is computing compliance with the CT requirements correctly. The individual sample results summarized in the monthly reports should be kept on file at the utility for a minimum of 5 years.

In addition to the monthly reporting requirements for source water quality conditions and disinfection information, systems with unfiltered supplies are also required to submit annual reports for the watershed control program and the on-site inspection, within 10 days after the end of the federal fiscal year.

The Primacy Agency will review the reports to determine whether the system is in compliance. A possible report format for the watershed control program is:

1. Summarize all activities in the watershed(s) for the previous year.

2. Identify activities or situations of actual and potential concern in the watershed(s).

3. Describe how the utility is proceeding to address activities creating potential health concerns.

EPA recommends that the Primacy Agency submits the annual watershed reports to the State Water Quality Managers. The reports will be useful in updating statewide assessments and management programs.

The SWTR requires each system to provide the Primacy Agency with a report of the on-site inspection unless the inspection is conducted by the Primacy Agency. EPA suggests that:

1. A report of the inspection containing the findings, suggested improvements and dates by which to complete improvements is to be prepared following the initial system review. When and how system has resolved problems identified in the previous report should also be included.

2. To lessen the burden on utilities, a report containing results of the general survey should be submitted in subsequent years.

In addition to these reporting requirements, the SWTR requires that the reporting requirements of the Total Trihalomethane Regulation and the Coliform Rule also be met.

Records of waterborne disease outbreaks also must be maintained. In the event of a waterborne disease outbreak, as defined in part 141.2 of the SWTR, the Primacy Agency must be notified by the end of the next business day.

The report of the outbreak should contain:

1. Date of occurrence
2. Type of illness
3. Number of cases
4. System conditions at the time of the outbreak, including disinfectant residuals, pH, temperature, turbidity, and bacteriological results.

The records of an outbreak should be maintained permanently or until filtration is installed.

6.2 Reporting Requirements for Public Water Systems Using Filtration

The SWTR requires filtered water systems to submit monthly reports to the Primacy Agency for determination of compliance with the requirements for:

- treated water turbidity
- disinfectant residual entering the distribution system
- disinfectant residuals throughout the distribution system

Tables 6-7 and 6-8 present a format which the utility can use as a daily data log and to submit monthly reports to the Primacy Agency.

Recommended Reporting Not Required by the SWTR

The Primacy Agency may also want filtered water systems to report some information associated with recommendations made in this manual which are not requirements of the SWTR. EPA recommends that filtered water systems:

1. Report the log inactivation of Giardia cysts and viruses, required by the Primacy Agency.

2. Report point of application for all disinfectants used.

3. Report the daily CT(s) used to calculate the log inactivation of Giardia cysts and viruses.

4. If more than one disinfectant is used, report the CT(s) and inactivation(s) achieved for each disinfectant and the total percent inactivation achieved.

5. Note any difference between the measured CT(s) and the CT required to meet the overall minimum treatment performance requirement specified by the Primacy Agency.

Tables 6-3 and 6-4 can be used to maintain the records necessary for numbers 2 through 5.

This information can be used to determine the disinfection level maintained by the system to assure that the overall removal/inactivation required is maintained.

The Primacy Agency may make provisions to minimize the reporting requirements for systems with reservoirs, large amounts of storage or long transmission mains which provide a long disinfectant contact time. Since these systems typically provide inactivation in excess of that needed, the Primacy Agency may require the system only to report the minimum daily residual at the end of the disinfectant contact time. The CT maintained can then be estimated based on this residual and the contact time under the system design flow. This method of CT determination will eliminate the need for the system to determine the contact time under maximum flow conditions each day.

TABLE 6-1

SOURCE WATER QUALITY CONDITIONS FOR UNFILTERED SYSTEMS

(For system use only)

Month _____ System/Treatment Plant _____

Year _____ PWSID _____

Date	Coliform Measurements (2)				Turbidity Measurements	
	No. of Samples		No. of Samples Meeting Specified Limits		3 Maximum Turbidity (NTU)	4 Turbidity "Event" (Yes or No)
	Fecal	Total	Fecal(< = 20/100 mL)	Total (< = 100/100 mL)		
1						
2						
3						
4						
5						
6						
7						
8						
9						
10						
11						
12						
13						
14						
15						
16						
17						
18						
19						
20						
21						
22						
23						
24						
25						
26						
27						
28						
29						
30						
31						
Totals:					Maximum daily turbidity = _____ NTU Total number of turbidity "events" = ___	

Notes:

1. Samples are taken from the source water immediately prior to the first disinfection point included in the CT determination.
2. As specified in 40 CFR 141.74(b)(1), a fecal or total coliform sample must be taken on each day that the system operates and a source water turbidity measurement exceeds 1 NTU.
3. For each day that the maximum turbidity exceeds 5 NTU, the date should also be entered for the day that the State was notified of this exceedance, e.g., "7.3-22 Apr".
4. A "yes" response is required each day the maximum turbidity exceeds 5 NTU and the previous day did not. This is indicative of the beginning of a turbidity "event". The total number of "yes" responses equals the number of turbidity "events".

TABLE 6-2

LONG-TERM SOURCE WATER QUALITY CONDITIONS FOR UNFILTERED SYSTEMS

(For system use only)

Year _____ System/Treatment Plant _____

PWSID _____

Month	Coliform Measurements				Turbidity Measurements	
	No. of Samples		No. of Samples Meeting Specified Limits		Days with Turbidity >5 NTU	Number of Turbidity Events
	Fecal	Total	Fecal(< = 20/100 mL)	Total (< = 100/100 mL)		
January						
February						
March						
April						
May						
June						
July						
August						
September						
October						
November						
December						
					Total:	

TABLE 6-3

CT DETERMINATION FOR UNFILTERED SYSTEMS -- MONTHLY REPORT TO PRIMACY AGENCY[1, 2]

Month _____ System/Treatment Plant _____

Year _____ PWSID _____

Disinfectant/Sequence of Application _____

Date	Disinfectant Concentration, C (mg/L)[3]	Disinfectant Contact Time, T (min.)[3]	CTcalc (=CxT)[4]	pH[3, 5]	Water Temp. (deg. C)[3]	CT99.9[6]	(CTcalc/CT99.9)
1							
2							
3							
4							
5							
6							
7							
8							
9							
10							
11							
12							
13							
14							
15							
16							
17							
18							
19							
20							
21							
22							
23							
24							
25							
26							
27							
28							
29							
30							
31							

Prepared by _____

Date _____

Notes:

1. To be included in the monthly report for at least 12 months after the initiation of reporting. After that time, the Primacy Agency may no longer require this form.
2. Use a separate form for each disinfectant/sampling site. Enter disinfectant and sequence position, e.g., "ozone/1st" or "ClO2/3rd".
3. Measurement taken at peak hourly flow.
4. CTcalc = C (mg/L) x T (min.).
5. Only required if the disinfectant is free chlorine.
6. From Tables 1.1 - 1.6, 2.1, and 3.1, 40 CFR 141.74(b)(3).

TABLE 6-4

DISINFECTION INFORMATION
FOR UNFILTERED SYSTEMS – MONTHLY REPORT TO PRIMACY AGENCY

Month _____ System/Treatment Plant _____

Year _____ PWSID _____

Date	Minimum Disinfectant Residual at Point-of-Entry to Distribution System (mg/L) [1]	(CTcalc/CT99.9) (from Table 6-3) Disinfectant Sequence						SUM (CTcalc/CT99.9) [2]	SUM (CTcalc/CT99.9) <1 (Yes or No) [3]
		1st	2nd	3rd	4th	5th	6th		
1									
2									
3									
4									
5									
6									
7									
8									
9									
10									
11									
12									
13									
14									
15									
16									
17									
18									
19									
20									
21									
22									
23									
24									
25									
26									
27									
28									
29									
30									
31									

Prepared by _____

Date _____

Notes:

1. If less than 0.2 mg/L, the lowest level and duration of the period must be reported, e.g., "0.1-3 hrs.".
2. To determine SUM (CTcalc/CT99.9), add (CTcalc/CT99.9) values from the first disinfectant sequence to the last.
3. If SUM (CTcalc/CT99.9) <1, a treatment technique violation has occurred, and a "yes" response must be entered.

TABLE 6-5

DISTRIBUTION SYSTEM DISINFECTANT RESIDUAL DATA FOR UNFILTERED AND FILTERED SYSTEMS MONTHLY REPORT TO PRIMACY AGENCY

Month _____ System/Treatment Plant _____

Year _____ PWSID _____

Date	No. of Sites Where Disinfectant Residual was Measured (=a)	No. of Sites Where no Disinfectant Residual Measured, but HPC Measured (=b)	No. of Sites Where Disinfectant Residual Not Detected, no HPC Measured (=c)	No. of Sites Where Disinfectant Residual Not Detected, HPC > 500/ml (=d)	No. of Sites Where Disinfectant Residual Not Measured, HPC > 500 ml (=e)
1					
2					
3					
4					
5					
6					
7					
8					
9					
10					
11					
12					
13					
14					
15					
16					
17					
18					
19					
20					
21					
22					
23					
24					
25					
26					
27					
28					
29					
30					
31					
Total	a=	b=	c=	d=	e=

V = (c+d+e)/(a=b)x100 = (____+____+____)/(____+____) x 100 = ____%

Prepared by _____

Date _____

TABLE 6-6

MONTHLY REPORT TO PRIMACY AGENCY FOR COMPLIANCE DETERMINATION -- UNFILTERED SYSTEMS

Month _____ System/Treatment Plant _____

Year _____ PWSID _____

Source Water Quality Conditions

A. Cumulative number of months for which results are reported

For source water coliform monitoring _____ (No. of months)

For turbidity monitoring _____ (No. of months)

1

B. Coliform Criteria

	No. of Samples		No. of Samples Meeting Specified Limits	
	Fecal	Total	Fecal (<= 20/100 mL)	Total (<= 100/100mL)
Previous 6 months': :	w= _____	x= _____	y= _____	z= _____

Percentage of samples <= 20/100 mL fecal coliforms, F = y/w x 100 = _____ %

Percentage of samples <= 100/100 mL total coliforms, T = z/x x 100 = _____ %

Is F < 90% ?: Yes: ___ No: ___ N/A ___; is T < 90% ?: Yes: ___ No: ___ N/A: ___

C. Turbidity Criteria

Maximum turbidity level for reporting (current) month = _____ NTU

Enter the month 120 months prior to the reporting month or January 1991 (whichever is later)_____

Dates of 5 NTU Exceedances Since Latest Month Recorded Above		
Beginning Date	Duration (days)	Date Reported

Disinfection Criteria

A. Point-of-Entry Minimum Disinfectant Residual Criteria

Days the Residual was <0.2 mg/L		
Day	Duration of Low Level (hrs.)	Date Reported to Primacy Agency

B. Distribution System Disinfectant Residual Criteria

The value of a, b, c, d, and e from Table 6-5, as specified in 40 CFR 141.75 (b)(2)(iii)(A)-(E):

a = ___, b = ___, c = ___, d = ___, e = ___

$$V = \frac{c + d + e}{a + b} \times 100 = _____ \%$$

For previous month, V = _____ %

C. Disinfection Requirement Criteria

Record the date and value of SUM (CTcalc/CT99.9) for any SUM (CTcalc/CT99.9) <1 (from Table 6-4):

If none, enter "none".

Date	SUM (CTcalc/CT99.9)

Prepared by _____

Date _____

Notes:

1. The current 6-month cumulatives are required to determine whether compliance with the coliform criteria has been achieved. These totals are calculated from: the previous 6-month cumulatives, the current month's, and totals from the earliest of 6 previous months.

TABLE 6-7

DAILY DATA SHEET FOR FILTERED SYSTEMS

(For system use only)

Month _____ System/Treatment Plant _____

Year _____ Filtration Technology _____

PWSID _____

Date	1 Minimum Disinfectant Residual at Point-of-Entry to Distribution System (mg/L)	2 Maximum Filtered Water Turbidity				3 No. of Turbidity Measurements	4 No. of Turbidity Measurements <= Specified Limit	5 No. of Turbidity Measurements > 5 NTU
		Filter #	Combined Filter Effluent	Clearwell Effluent	Plant Effluent			
1								
2								
3								
4								
5								
6								
7								
8								
9								
10								
11								
12								
13								
14								
15								
16								
17								
18								
19								
20								
21								
22								
23								
24								
25								
26								
27								
28								
29								
30								
31								
					Totals:			

Notes:

1. For multiple disinfectants, this column must only be completed for the last disinfectant added prior to entering the distribution system. If less than 0.2 mg/L, the duration of the period must be reported, e.g., "0.1-3 hrs".
2. For systems using conventional treatment, direct filtration, or technologies other than slow sand or diatomaceous earht filtration, turbidity measurements may be taken at the combined filter effluent, clearwell effluent, or plant effluent prior to entry into the distribution system. The turbidity may also be measured for each individual filter with a separate sheet maintained for each
3. For continuous monitors count each 4-hour period as 1 sample.
4. Depending on the filtration technology employed, the number of turbidity samples meeting the following levels must be recorded: conventional treatment or direct filtration-0.5 NTU, slow sand filtration-1 NTU, diatomaceous earth filtration-1 NTU. The State may specify alternate performance levels for conventional treatment or direct filtration, not exceeding 1 NTU, and slow sand filtration, not exceeding 5 NTU, in which case the number of turbidity measurements meeting these levels must be recorded.
5. In recording the number of turbidity measurements exceeding 5 NTU, the turbidity values should also be recorded, e.g., 6.2, 8.0"

TABLE 6-8

MONTHLY REPORT TO PRIMACY AGENCY FOR COMPLIANCE DETERMINATION – FILTERED SYSTEMS

Month _____ System/Treatment Plant _____

Year _____ Type of Filtration _____

Turbidity Limit _____

PWSID _____

Turbidity Performance Criteria

A. Total number of filtered water turbidity measurements = _____

B. Total number of filtered water turbidity measurements that are less than or equal to the specified limits for the filtration technology employed = _____

C. The percentage of turbidity measurements meeting the specified limits = B/A x 100 = _____/_____ x 100 = _____%

D. Record the date and turbidity value for any measurements exceeding 5 NTU: If none, enter "none".

Date	Turbidity, NTU

Disinfection Performance Criteria

A. Point-of-Entry Minimum Disinfectant Residual Criteria

Date	Minimum Disinfectant Residual at Point-of-Entry to Distribution System (mg/L)	Date	Minimum Disinfectant Residual at Point-of-Entry to Distribution System (mg/L)	Date	Minimum Disinfectant Residual at Point-of-Entry to Distribution System (mg/L)
1		11		21	
2		12		22	
3		13		23	
4		14		24	
5		15		25	
6		16		26	
7		17		27	
8		18		28	
9		19		29	
10		20		30	
				31	

Days the Residual was <0.2 mg/L		
Day	Duration of Low Level (hrs.)	Date Reported to Primacy Agency

B. Distribution System Disinfectant Residual Criteria

The value of a, b, c, d, and e from Table 6-5, as specified in 40 CFR 141.75 (b)(2)(iii)(a)-(e):

a = ____, b = ____, c = ____, d = ____, e = ____

$$V = \frac{c + d + e}{a + b} \times 100 = _____ \%$$

For previous month, V = _____ %

Prepared by _____

Date _____

7. COMPLIANCE

7.1 Introduction

This section provides guidance on when and how the requirements of the SWTR will go into effect, including determinations made by Primacy Agencies.

7.2 SYSTEMS USING A SURFACE WATER SOURCE (NOT GROUND WATER UNDER THE DIRECT INFLUENCE OF SURFACE WATER)

The SDWA requires, within 18 months following the promulgation of a rule, that Primacy Agencies promulgate any regulations necessary to implement that rule. Under S1413, these rules must be at least as stringent as those required by EPA. Thus, Primacy Agencies must promulgate regulations which are at least as stringent as the SWTR by December 30, 1990. By December 30, 1991, each Primacy Agency must determine which systems will be required to filter. If filtration is required, it must be installed within 18 months following the determination or by June 29, 1993, whichever is later. In cases where it is not feasible for a system to install filtration in this time period, the Primacy Agency may allow an exemption to extend the time period (see Section 9).

If a Primacy Agency fails to comply with this schedule for adopting the criteria and applying them to determine who must filter, systems must comply with the "objective" or self-implementing criteria (i.e., the requirements that are clear on the face of the rule and do not require the exercise of Primacy Agency discretion). Unfiltered supplies must comply beginning December 30, 1991 and filtered supplies beginning June 29, 1993.

Monitoring requirements for unfiltered systems must be met beginning December 30, 1990 unless the Primacy Agency has already determined that filtration is necessary. This coincides with the Agency's requirement to promulgate regulations for making filtration decisions by that date under the SDWA. Primacy Agencies may specify which systems should conduct the monitoring necessary to demonstrate compliance with the criteria for avoiding filtration. For some systems where an historical data base exists, and where it is apparent that the system would exceed the source

water quality criteria (or that some other criteria would not be met, such as an adequate watershed control program), no monitoring may be necessary for the Primacy Agency to determine that filtration is required. If a particular system (and/or the Primacy Agency) knows that it cannot meet the criteria for avoiding filtration, there is no reason to require that system to conduct the source water monitoring prior to the formal decision by the Primacy Agency that filtration is required. This is true because the only purpose of that monitoring would be to demonstrate whether or not the criteria to avoid filtration are being met.

In reviewing the data for determining which systems must filter, the Primacy Agency will have to decide on a case-by-case basis the conditions which will require filtration. For example, a system may not meet the specified CT requirements for the first few months of monitoring and upgrades its disinfection to meet the CT requirements in subsequent months. In this case, the Primacy Agency could conclude that the system will be able to meet this criterion for avoiding filtration. The time periods specified for in the criteria to avoid filtration (e.g., six months for total coliforms, one year and ten years for turbidity and one year for CT requirements) do not begin until December 30, 1991 unless the Primacy Agency specifies an earlier date.

Beginning December 30, 1991 the requirements for avoiding filtration specified in §141.71(a) and (b) and the requirements of §141.71(c) and §141.72(a) go into effect unless the Primacy Agency already has determined that filtration is required. Beginning December 30, 1991, if a system fails to meet any one of the criteria for avoiding filtration, even if the system were meeting all the criteria up to that point, it must install filtration and comply with the requirements for filtered systems including the general requirements in §141.73 and the disinfection requirements in §141.72(b), within 18 months of the failure. Whenever a Primacy Agency determines that filtration is required, it may specify interim requirements for the period prior to installation of filtration treatment.

Following the determination that filtration is required, the system must develop a plan to implement its installation. The plan must include consideration for the following:

- Providing uninterrupted water service throughout the transition period
- Siting for the future facility
- Financing options and opportunities
- Scheduling of design and construction

Systems which are unable to install filtration within the specified time frame may apply for an exemption to extend the period for installing filtration.

Table 7-1 summarizes the requirements for the SWTR for unfiltered systems noting conditions which require the installation of filtration. It is important to note that only treatment technique violations trigger the requirement to install filtration while violations of monitoring, reporting or analytical requirements do not. The monitoring requirements for unfiltered supplies are presented in Section 3 and the reporting requirements are presented in Section 6.

All systems with filtration in place must meet the treatment technique requirements specified in S141.73 (filtration criteria) and S141.72(b) (disinfection criteria), and the monitoring and reporting requirements specified in S141.74(c) and S141.75(b), respectively, beginning June 29, 1993. Table 7-2 summarizes the SWTR requirements for filtered systems, including conditions needed for compliance with treatment requirements. Monitoring requirements for filtered supplies are enumerated in Section 5 and reporting requirements are presented in Section 6.

7.3 Compliance Transition with Current NPDWR Turbidity Requirements

The current (interim) NPDWR for turbidity under S141.13 (MCL requirements) and S141.22 (monitoring requirements) will apply for unfiltered systems until December 30, 1991 unless the Primacy Agency determines that filtration is required. In cases where filtration is required, the interim NPDWR applies until June 29, 1993 or until filtration is installed, whichever is later. Unfiltered supplies will also be

subject to the turbidity monitoring requirements of S141.74(b)(2) beginning December 30, 1990 coincidently with the interim requirements. Beginning June 29, 1993, the turbidity performance criteria for filtered systems (S141.73), and the monitoring requirements under S141.74 will apply.

7.4 Systems Using a Ground Water Source Under the Direct Influence of Surface Water

Part of the Primacy Agency's program revisions to adopt the SWTR must include procedures for determining, for each system in the Primacy Agency served by a ground water source, whether that source is under the direct influence of surface water. By June 29, 1994 and June 29, 1999, each Primacy Agency must determine which community and non-community public water supplies, respectively, use ground water which is under the direct influence of surface water. EPA recommends that these determinations be made in conjunction with related activities required by other regulations (e.g., sanitary surveys pursuant to the final coliform rule, vulnerability assessments pursuant to the volatile organic chemicals rule, the forthcoming disinfection requirements for ground water systems). In addition, EPA-approved wellhead protection programs required under the Safe Drinking Water Act Section 1428 may contain methods and criteria for determing zones of contribution, assessments of potential contamination, and management of sources of contamination. These programs may be used as a partial basis for the vulnerability assessment and for making the determination of (a) whether a system is under the direct influence of surface water and (b) if direct influence is determined, whether there is adequate watershed control to avoid filtration. Guidelines for developing and implementing a wellhead protection program are found in "Guidelines for Applicants for State Wellhead Protection Program Assistance Funds under the Safe Drinking Water Act" (U.S. EPA, 1987a).

A system using a ground water source under the influence of surface water that does not have filtration in place must begin monitoring and reporting in accordance with S141.74(b) and S141.75(a), respectively, to determine whether it meets the criteria for avoiding filtration beginning December 30, 1990 or six months after the Primacy Agency determines that

TABLE 7-1

REQUIREMENTS FOR UNFILTERED SYSTEMS

Requirement	Criterion	Monitoring	Required for Compliance(1)	Triggers Filtration(2)	Notification: Primacy Agency	Notification: Public(3)
Unfiltered Supplies (S141.71)						
a) Source Water Quality Conditions						
1) Fecal Coliform / Total Coliform	20/100ml / 100/100ml	Frequency based on population		<90% of samples from past 6 mos < criterion	monthly report	No
2) Turbidity	5NTU	continuous or grab/4 hrs	<5NTU	>5NTU unless "event"	next business day	Yes
b) Site-Specific Conditions						
ii) Disinfection for 3-log Giardia cyst & 4-log virus inactivation (S141.72(a))	$CT_{99.9}$	daily at peak flow except for one day per month	≥criterion daily consecutive months (4)	violation for >1 of 12	monthly report	Yes
Redundant Disinfection Components (S141.72(a)(2))				components not in place	annual report of on-site inspection	Yes
Disinfectant Residual entering the system (S141.72(3)(i))	0.2 mg/l	continuous; systems <3300 population-grab samples	not <0.2 mg/l for > 4 hours	violation if <0.2 mg/l for > 4 hours unless Primacy Agency determines unusual and unpredictable	next business day if <0.2mg/l for any period of time	Yes (if <0.2 mg/L for >4 hours)
(ii) Disinfectant Residual in the Distribution System (S141.72(a)(4))	detectable residual or HPC ≤500/ml	(5)sample location & frequency based on population, approved by State	detectable in ≥ 95% of monthly samples for any two consecutive months	violation unless failure is not caused by deficiency in source water treatment	monthly report	Yes

TABLE 7-1

REQUIREMENTS FOR UNFILTERED SYSTEMS (Continued)

Requirement	Criterion	Monitoring	Required for Compliance(1)	Triggers Filtration(2)	Notification	
					Primacy Agency	Public(3)
2) Watershed Control Program	in place	activities in watershed		insufficient program as determined by Primacy Agency	annual report	
3) On-site Inspection	annual	watershed program & disinfection system		insufficient program as determined by Primacy Agency	annual report	
4) Waterborne Disease Outbreak	no outbreaks recorded	public health	No outbreak with current configuration and source	outbreak with current configuration and source	next business day	Yes
5) Total Coliform Rule	≤1 positive for systems taking <40 samples/mo; ≤5.0% positive for systems taking ≥40 samples/mo.	frequency based on population	meet criterion each month	> criterion for >1 of 12 consecutive months unless failure is not caused by a deficiency in source water treatment	monthly report	
6) Total Trihalomethane Regulation	0.10 mg/l for systems serving >10,000	quarterly		> criterion based on annual average		

Notes:

1. Non-compliance results in a treatment technique violation.
2. Failure to install filtration within 18 months after failure to meet unfiltered supply criteria results in a treatment technique violation.
3. In local newspaper within 14 days of violation and mail notice with bill or by itself within 45 days of violation.
4. Violation may be allowed for 2 of 12 consecutive months if the Primacy Agency determines one violation to be caused by unusual and unpredictable circumstances.
5. Primacy Agency may determine whether adequate disinfection is provided.

TABLE 7-2

REQUIREMENTS FOR FILTERED SYSTEM

Requirement	Criterion	Monitoring	Compliance[1]	Notification	
				Primacy Agency	Public[2]
Filtered Supplies (S141.73)					
a) Conventional or Direct Filtration	0.5 NTU (up to 1 NTU)[4]	continuous or grab/4 hrs	95% monthly samples < MCL none > 5 NTU	monthly report	Yes
b) Slow sand Filtration	1 NTU (up to 5 NTU)[4]	continuous or grab/4 hrs (one/day)[4]	95% monthly samples < MCL none > 5 NTU	monthly report	Yes
c) Diatomaceous Earth Filtration	1 NTU	continuous or grab/4 hrs	95% monthly samples < 1 NTU none > 5 NTU	monthly report	Yes
d) Other Technologies	1 NTU up (to 5 NTU)[4]	continuous or grab/4 hrs (one/day)[4]	95% monthly samples < MCL none > 5 NTU	monthly report	Yes

TABLE 7-2

REQUIREMENTS FOR FILTERED SYSTEM (Continued)

Requirement	Criterion	Monitoring	Compliance[1]	Notification	
				Primacy Agency	Public[2]
Disinfection for Filtered Supplies (S141.72(b))					
1) Supplement Filtration to meet Overall Treatment	-	-	-	as specified	Yes
2i) Disinfectant Residual Entering System	0.2 mg/L	continuous; systems < 3300 population-grab samples	not < 0.2 mg/L for > 4 hrs	next business day	Yes
3i) Disinfectant Residual in Distribution System	detectable residual or HPC ≤500/ml[3]	sample location & frequency based on population approved by State	not < MCL in > 5% of monthly samples for 2 consecutive months	monthly report	Yes

Notes:

1. Non-compliance results in a treatment technique violation.
2. In local newspaper within 14 days of violation and mail notice with bill or by itself within 45 days of violation.
3. Primacy Agency may determine whether adequate disinfection is provided.
4. If Primacy Agency exercises discretion.

the ground water source is under the influence of surface water, whichever is later. Within 18 months following the determination that a system is under the influence of surface water, the Primacy Agency must determine, using the same criteria that apply to systems using a surface water source, whether the system must provide filtration treatment. As for systems using a surface water source, the Primacy Agency must evaluate the data on a case-by-case basis to determine conditions which will trigger the need for filtration.

Beginning December 30,1991 or 18 months after the determination that a system is under the direct influence of surface water, whichever is later, the criteria for avoiding filtration in S141.71(a) and (b) and the requirements for unfiltered systems in S141.71(c) and S141.72(a) go into effect, unless the Primacy Agency has determined that filtration is required. As with systems using a surface water source, subsequent failure to comply with any one of the criteria for avoiding filtration requires the installation of filtration treatment. Thus, beginning December 30, 1991 or 18 months after the Primacy Agency determines that a system is using a ground water source under the direct influence of surface water, whichever is later, a system which fails to meet any one of the criteria to avoid filtration must install filtration and comply with the requirements for filtered systems within 18 months of the failure or by June 29, 1993, whichever is later. As for unfiltered systems, systems under the direct influence of surface water may apply for an exemption to extend the time period for installing filtration.

Any system using a ground water source that the Primacy Agency determines is under the direct influence of surface water and that already has filtration in place at the time of the Primacy Agency determination must meet the treatment technique, monitoring and reporting requirements for filtered systems beginning June 29, 1993 or 18 months after the Primacy Agency determination, whichever is later.

7.5 Responses for Systems not Meeting SWTR Criteria

7.5.1 Introduction

Systems which presently fail to meet the SWTR criteria may be able to upgrade the system's design and/or operation and maintenance in order to achieve compliance. The purpose of this section is to present options which may be followed to achieve compliance.

7.5.2 Systems Not Filtering

Systems not filtering must meet the criteria to avoid filtration beginning December 30, 1991 and on a continuing basis thereafter or install filtration. Systems not filtering can be divided into two categories:

A. Those systems not currently meeting the SWTR criteria but with the ability to upgrade to meet them.

B. Those systems not able to meet the SWTR criteria by December 30, 1991. If the installation of filtration is not possible by June 29, 1993 the system may request an exemption and take interim measures to provide safe water to avoid violation of a treatment technique requirement.

Systems in Category A

Example A - Response Situation

Condition: System is not meeting the source water fecal and/or total coliform concentrations but has not received judgment on the adequacy of its watershed control.

Response Options:

- Monitor for fecal coliforms rather than total coliforms if this is not already done. Fecal coliforms are a direct indicator of fecal contamination where total coliforms are not. If total coliform levels are exceeded but fecal levels are not, the system meets the criteria.

- Take appropriate action in the watershed to assure fecal and total coliform concentrations are below the criteria, such as elimination of animal activity near the source water intake.

Example B - Response Situation

Condition: System meets the source water quality criteria, watershed control requirements, and is maintaining a disinfectant residual within the distribution system, but is not able to meet the CT requirements due to lack of contact time prior to the first customer.

Response Options:

- Increase the application of disinfectant while monitoring THM levels to ensure they remain below the MCL.
- Add additional contact time through storage to obtain an adequate CT.
- Apply a more effective disinfectant such as ozone.

Systems in Category B

Example A - Response Situation

Condition: System meets the source water turbidity but not the fecal coliform requirements. A sewage treatment plant discharges into the source water. A determination has been made that the system does not have adequate watershed control.

Response Options:

- Purchase water from a nearby surveyor or use an alternate source such as ground water if available.
- Take steps to install filtration, applying for an exemption (time delay) as presented in Section 9 where appropriate.

Example B

Condition: The source water exceeds a turbidity of 5 NTU for more than two periods in a year under normal weather and operating conditions.

Response Options:

- Purchase water from a nearby purveyor or use an alternate source such as ground water if available.
- Take steps to install filtration, applying for an exemption (time delay) as presented in Section 9 where appropriate.

In the interim prior to adoption of either of the above options, certain protective measures may be appropriate. One protective measure which can be used would be the issuance of a public notice to boil all water for consumption during periods when the turbidity exceeds 5 NTU. If such a notice is issued, the utility should continue sampling the distribution system for chlorine residual and total coliforms, and initiate measurement of HPCs in the distribution system. These data and the raw water turbidity should be used to determine when to lift the boil water notice.
The notice could be lifted when:

- The historical (prior to high turbidity) disinfectant residual concentration is reestablished in the distribution system;
- The total coliform requirements are met;
- The HPC count is less than 500/ml; and
- The turbidity of the raw water is less than 5 NTU.

7.4.3 Systems Currently Filtering

Systems which are currently filtering must meet the SWTR criteria within 48 months of the SWTR to be in compliance, after which the criteria must be continually met for the system to be in compliance.

Example A - Response Situation

Condition: A direct filtration plant is treating a surface water which is not compatible with this treatment process. The system is not achieving its required turbidity performance or disinfection criteria.

Response Options:

- Optimize coagulant dose.
- Reduce filter loading rates.
- Evaluate the effect on performance of installing flocculation and sedimentation ahead of the filters.

Example B - Response Situation

Condition: A filtration plant is using surface water which is compatible with its treatment system. The system is not achieving disinfection performance criteria required by the Primacy Agency to achieve a 1-log inactivation of Giardia cysts; however, it is meeting the requirements of the Total Coliform Rule.

Response Options:

- Increase disinfectant dosage(s).
- Install storage facilities to increase disinfectant contact time.
- Ensure optimum filtration efficiency by:
  - Use of a filter aid.
  - Reduction in filter loading rates.
  - More frequent backwashing of filters.

The Primacy Agency may grant additional removal credit for optimum filtration.

EPA intends to promulgate National Primary Drinking Water Regulations to regulate levels of disinfectants and disinfectant by-product when it promulgates disinfection requirements for ground water systems (anticipated in 1992). EPA is concerned that changes required in utilities' disinfection practices to meet the required inactivations for the SWTR might be inconsistent with treatment changes needed to comply with the forthcoming regulations for disinfectants and disinfection by-products. For this reason, the EPA is allowing Primacy Agencies discretion in determining the level of disinfection required for filtered systems to meet the overall treatment performance requirements specified in the rule or recommended based on source water quality.

During the interim period, prior to promulgation of the disinfection by-product regulation, EPA recommends that the Primacy Agency allow more credit for Giardia cyst and virus removal than generally recommended. This interim level is recommended in cases where the Primacy Agency determines that a system is not currently at a significant risk from microbiological concerns at the existing level of disinfection and that

a deferral is necessary for the system to upgrade its disinfection process to optimally achieve compliance with the SWTR as well as the forthcoming disinfection by-product regulations. Section 5.5.3 presents some guidelines for establishing interim disinfection requirements.

8. PUBLIC NOTIFICATION

The SWTR specifies that the public notification requirements of the Safe Drinking Water Act (SDWA) and the implementing regulations of 40 CFR Paragraph 141.32 must be followed. These regulations divide public notification requirements into two tiers. These tiers are defined as follows:

1. Tier 1:
   a. Failure to comply with MCL
   b. Failure to comply with prescribed treatment technique
   c. Failure to comply with a variance or exemption schedule

2. Tier 2:
   a. Failure to comply with monitoring requirements
   b. Failure to comply with a testing procedure prescribed by a NPDWR
   c. Operating under a variance/exemption. This is not considered a violation but public notification is required.

The SWTR classifies violations of Sections 141.70, 141.71(c), 141.72 and 141.73 (i.e., treatment technique requirements as specified in Section 141.76) as Tier 1 violations and violations of Section 141.74 as Tier 2 violations. Violations of 141.75 (reporting requirements) do not require public notification.

There are certain general requirements which all public notices must meet. All notices must provide a clear and readily understandable explanation of the violation, any potential adverse health effects, the population at risk, the steps the system is taking to correct the violation, the necessity of seeking alternate water supplies (if any) and any preventative measures the consumer should take. The notice must be conspicuous, not contain any unduly technical language, unduly small print or similar problems. The notice must include the telephone number of the owner or operator or designee of the public water system as a source of additional information concerning the violation where appropriate. The notice must be bi- or multilingual if appropriate.

In addition, the public notification rule requires that when providing information on potential adverse health effects in Tier 1 public

notices and in notices on the granting and continued existence of a variance or exemption, the owner or operator of a public water system must include certain mandatory health effects language. For violations of treatment technique requirements for filtration and disinfection, the mandatory health effects language is:

Microbiological Contaminants

The United States Environmental Protection Agency (EPA) sets drinking water standards and has determined that microbiological contaminants are a health concern at certain levels of exposure. If water is inadequately treated, microbiological contaminants in that water may cause disease. Disease symptoms may include diarrhea, cramps, nausea, and possibly jaundice and any associated headaches, and fatigue. These symptoms, however, are not just associated with disease-causing organisms in drinking water, but also may be caused by a number of factors other than your drinking water. EPA has set enforceable requirements for treating drinking water to reduce the risk of these adverse health effects. Treatment such as filtering and disinfecting the water removes or destroys microbiological contaminants. Drinking water which is treated to meet EPA requirements is associated with little to none of this risk and should be considered safe.

Further, the owner or operator of a community water system must give a copy of the most recent notice for any Tier 1 violations to all new billing units or hookups prior to or at the time service begins.

The medium for performing public notification and the time period in which notification must be sent varies with the type of violation and is specified in Section 141.32. For Tier 1 violations (i.e., violations of Sections 141.70, 141.71, 141.72 and 141.73), the owner or operator of a public water system must give notice:

1. By publication in a local daily newspaper as soon as possible but in no case later than 14 days after the violation or failure. If the area does not have a daily newspaper, then notice shall be given by publication in a weekly newspaper of general circulation in the area, and

2. By either direct mail delivery or hand delivery of the notice, either by itself or with the water bill not later than 45 days after the violation or failure. The Primacy Agency may waive this requirement if it determines that the owner or operator has corrected the violation within the 45 days.

Although the SWTR does not specify any acute violations, the Primacy Agency may specify some Tier 1 violations as posing an acute risk to human health; for example these violations may include:

1. A waterborne disease outbreak in an unfiltered supply.

2. Turbidity of the water prior to disinfection of an unfiltered supply or the turbidity of filtered water exceeds 5 NTU at any time.

3. Failure to maintain a disinfectant residual of at least 0.2 mg/l in the water being delivered to the distribution system.

For these violations or any others defined by the Primacy Agency as "acute" violations, the system must furnish a copy of the notice to the radio and television stations serving the area as soon as possible but in no case later than 72 hours after the violation. Depending upon circumstances particular to the system, as determined by the Primacy Agency, the notice may instruct that all water should be boiled prior to consumption.

Following the initial notice, the owner or operator must give notice at least once every three months by mail delivery (either by itself or with the water bill), or by hand delivery, for as long as the violation or failure exists.

There are two variations on these requirements. First, the owner or operator of a community water system in an area not served by a daily or weekly newspaper must give notice within 14 days after the violation by hand delivery or continuous posting of a notice of the violation. The notice must be in a conspicuous place in the area served by the system and must continue for as long as the violation exists. Notice by hand delivery must be repeated at least every three months for the duration of the violation.

Secondly, the owner or operator of a noncommunity water system (i.e., one serving a transitory population) may give notice by hand delivery or continuous posting of the notice in conspicuous places in the area served by the system. Notice must be given within 14 days after the violation. If notice is given by posting, then it must continue as long

as the violation exists. Notice given by hand delivery must be repeated at least every three months for as long as the violation exists.

For Tier 2 violations (i.e., violations of 40 CFR 141.74, analytical and monitoring requirements) notice must be given within three months after the violation by publication in a daily newspaper of general circulation, or if there is no daily newspaper, then in a weekly newspaper. In addition, the owner or operator shall give notice by mail (either by itself or with the water bill) or by hand delivery at least once every three months for as long as the violation exists. Notice of a variance or exemption must be given every three months from the date it is granted for as long as it remains in effect.

If the area is not served by a daily or weekly newspaper, the owner or operator of a community water system must give notice by continuous posting in conspicuous places in the area served by the system. This must continue as long as the violation does or the variance or exemption remains in effect. Notice by hand delivery must be repeated at least every three months for the duration of the violation or the variance of exemption.

For noncommunity water systems, the owner or operator may give notice by hand delivery or continuous posting in conspicuous places; beginning within 3 months of the violation or the variance or exemption. Posting must continue for the duration of the violation or variance or exemption and notice by hand delivery must be repeated at least every 3 months during this period.

The Primacy Agency may allow for owner or operator to provide less frequent notice for minor monitoring violations (as defined, by the Primacy Agency <u>if</u> EPA has approved the Primacy Agency's substitute requirements contained in a program revision application).

To provide further assistance in preparing public notices, several examples have been provided. However, each situation is different and may call for differences in the content and tone of the notice. All notices must comply with the general requirements specified above.

Example 1 - Tier 1 Violation-Unfiltered Supply

Following is an example of a Tier 1 violation which may be considered by the Primacy Agency to pose an acute risk to human health.

A system which does not apply filtration experiences a breakdown in the chlorine feed systems and the switchover system fails to activate the backup systems. A number of hours pass before the operator discovers the malfunction. The operator, upon discovery of the malfunction, contacts the local television and radio stations and announces that the public is receiving untreated water. The announcement may read as follows:

> We have just received word from the Aswan Water Board that a malfunction of the disinfection system has allowed untreated water to pass into the distribution system. Thus, this system providing drinking water is in violation of a treatment technique requirement. The United States Environmental Protection Agency (EPA) sets drinking water standards and has determined that microbiological contaminants are a health concern at certain levels of exposure. If water is inadequately treated, microbiological contaminants in that water may cause disease. Disease symptoms may include diarrhea, cramps, nausea, and possibly jaundice and any associated headaches, and fatigue. These symptoms, however, are not just associated with disease-causing organisms in drinking water, but also may be caused by a number of factors other than your drinking water. EPA has set enforceable requirements for treating drinking water to reduce the risk of these adverse health effects. Treatment such as filtering and disinfecting the water removes or destroys microbiological contaminants. Drinking water which is treated to meet EPA requirements is associated with little to none of this risk and should be considered safe.
>
> The temporary breakdown in disinfection may have allowed micro-organisms to pass into the distribution system. The operation of the system has been restored so that no further contamination of the distribution system will occur. Any further changes will be announced.
>
> Additional information is available at the following number: 235-WATER.
>
> A direct mailing of the notice is provided within 45 days of the occurrence.

Example 2 - Tier 1 Violation-Unfiltered Supply

Following is an example of a Tier 1 violation which may be considered by the Primacy Agency to pose an acute risk to human health.

A system supplies an unfiltered surface water to its customers. During a period of unusually heavy rains caused by a hurricane in the area, the turbidity of the water exceeds 5 NTU. The turbidity data during which the heavy rains occur is as follows:

Day 1 NTU	Day 2 NTU	Day 3 NTU	Day 4 NTU	Day 5 NTU
0.4	0.8	0.7	0.7	7.6
0.4	0.5	0.4	7.6	3.1
0.5	0.5	0.4	11.3	2.7
0.7	0.4	0.5	9.6	0.7
1.1	0.4	0.4	7.2	0.8
0.9	0.6	0.6	5.0	0.5

The following public notice was prepared and submitted to the local newspaper, television and radio stations within 72 hours of the first turbidity exceedence of 5 NTU.

> The occurrence of heavy rains in our watershed is causing a rise in the turbidity of the drinking water supplied by Fairfax Water Company.
>
> Turbidity is a measurement of particulate matter in water. It is of significance in drinking water because irregularly shaped particles can both harbor microorganisms and interfere directly with disinfection which destroys microorganisms. While the particles causing the turbidity may not be harmful or even visible at the concentrations measured, the net effect of a turbid water is to increase the survival rate of microorganisms contained in the water. This is of concern because several diseases are associated with waterborne microorganisms.
>
> Because of the high turbidity levels, the Fairfax system is in violation of a treatment requirement set by the Environmental Protection Agency (EPA).
>
> The United States Environmental Protection Agency (EPA) sets drinking water standards and has determined that microbiological contaminants are a health concern at certain levels of exposure. If water is inadequately treated, microbiological contaminants in that water may cause disease. Disease symptoms may include diarrhea, cramps, nausea, and possibly jaundice and any associated headaches, and fatigue. These symptoms, however, are not just associated with disease-causing organisms in drinking water, but also may be caused by a number of factors other than your drinking water. EPA has set enforceable requirements for treating drinking water to reduce the risk of these adverse health effects. Treatment such as filtering and disinfecting the water removes or destroys microbiological contaminants. Drinking water which is treated to

meet EPA requirements is associated with little to none of this risk and should be considered safe.

In order to protect yourself from illness, all water from the Fairfax system used for drinking, cooking and washing dishes should be boiled at a rolling boil for one minute.

The system is being closely monitored and a notice will be issued when the water returns to an acceptable quality and no longer needs to be boiled.

The utility continues sampling the distribution system for chlorine residual and total coliforms, and initiates measurement of the HPCs in the distribution system. The notice is lifted when all the following are met:

- The historical (prior to high turbidity) disinfectant residual concentration is reestablished in the distribution system.
- The total coliform requirements are met.
- The HPC count is <500/ml.
- The turbidity of the raw water is less than 5 NTU.

The Primacy Agency most decide whether the turbidity event was unusual or unpredictable and whether filtration should be installed.

Example 3 - Tier 1 Violation - Filtered Supply

A conventional treatment plant is treating a surface water. A malfunctioning alum feed system resulted in an increase of the filter effluent turbidities. The effluent turbidity was between 0.5 and 1.0 NTU in 20 percent of the samples for the month. The utility issued a notice which was published in a local daily newspaper within 14 days after the violation. The notice read as follows:

During the previous month, the Baltic Water Treatment Plant experienced difficulties with the chemical feed system. The malfunctions caused an effluent turbidity level above 0.5 NTU in 20 percent of the samples for the month. The current treatment standards require that the turbidity must be less than 0.5 NTU in 95 percent of the monthly samples. The Baltic drinking water system has thus been in violation of a treatment technique requirement.

The United States Environmental Protection Agency (EPA) sets drinking water standards and has determined that microbiological

contaminants are a health concern at certain levels of exposure. If water is inadequately treated, microbiological contaminants in that water may cause disease. Disease symptoms may include diarrhea, cramps, nausea, and possibly jaundice and any associated headaches, and fatigue. These symptoms, however, are not just associated with disease-causing organisms in drinking water, but also may be caused by a number of factors other than your drinking water. EPA has set enforceable requirements for treating drinking water to reduce the risk of these adverse health effects. Treatment such as filtering and disinfecting the water removes or destroys microbiological contaminants. Drinking water which is treated to meet EPA requirements is associated with little to none of this risk and should be considered safe.

The chemical, feed and switchover components of the system have been repaired and are in working order and turbidity levels are meeting the standard. It is unlikely that illness will result from the turbidity exceedences previously mentioned because continuous stringent disinfection conditions were in effect and the system was in compliance with other microbiological drinking water standards pertaining to microbiological contamination. However, a doctor should be contacted in the event of illness. For additional information call, 1-800-726-WATER.

9. EXEMPTIONS

9.1 Overview of Requirements

Section 1416 of the Safe Drinking Water Act allows a Primacy Agency to exempt any public water system within its jurisdiction from any treatment technique requirement imposed by a national primary drinking water regulation upon a finding that:

1. Due to compelling factors (which may include economic factors), the public water system is unable to comply with the treatment technique requirement;

2. The public water system was in operation on the effective date of the treatment technique requirement or, for a system that was not in operation by that date, only if no reasonable alternative source of drinking water is available to the new system; and

3. The granting of the exemption will not result in an unreasonable risk to health.

If a Primacy Agency grants a public water system an exemption, the Agency must prescribe, at the time the exemption is granted, a schedule for:

1. Compliance (including increments of progress) by the public water system with each treatment technique requirement with respect to which the exemption was granted; and

2. Implementation by the system of such control measures as the Primacy Agency may require during the period the exemption is in effect.

Before prescribing a schedule, the Primacy Agency must provide notice and opportunity for a public hearing on the schedule. The schedule prescribed must require compliance by the public water system with the treatment technique requirement as expeditiously as practicable, but in no case later than one year after the exemption is issued (except that, if the system meets certain requirements, the final date for compliance may be extended for a period not to exceed three years from the date the exemption is granted). For systems serving less than 500 service

connections, and meeting certain additional requirements, the Primacy Agency may renew the exemption for one or more additional two-year periods.

Under the SWTR, no exemptions are allowed from the requirement to provide disinfection for surface water systems, but exemptions are available to reduce the degree of disinfection required. Exemptions from the filtration requirements are available. The following sections present guidelines for evaluating conditions under which exemptions are appropriate.

9.2 Recommended Criteria

In order to obtain an exemption from the SWTR, a system must meet certain minimum criteria to assure no unreasonable risk to health. These should be applied before looking at other factors such as economics. Recommended minimum criteria for assuring no unreasonable risk to health exists are listed below.

Systems which do not provide filtration

- Practice disinfection to achieve at least a 2-log inactivation of Giardia cysts; or comply with the disinfection requirements for the distribution system as defined in Section 141.72(b) of the SWTR.

- Comply with the monthly coliform MCL; or provide bottled water (or another alternate water source) or point of use treatment devices for their customers in which representive samples comply with all the MCL National Primary Drinking Water Regulations.

EPA recommends that in order to obtain an extension to the initial 1 year exemption period in addition to the required elements in Section 1416, the system would need to be in compliance with the monthly coliform MCL, satisfy the above disinfection criteria and not have any evidence of waterborne disease outbreaks attributable to the system at the end of that first exemption period. If at any point during the extended exemption period the system did not meet these conditions, the exemption should be withdrawn and the system should be subject to an enforcement action.

Systems which provide filtration

- Practice disinfection to achieve at least a 0.5 log inactivation of Giardia cysts; or comply with the disinfection requirements for the distribution system as defined in Section 141.72 of the rule.

- Comply with the monthly coliform MCL; or provide bottled water (or another alternate water source) or point of use treatment devices for their customers in which representive samples comply with all the MCL National Primary Drinking Water Regulations.

- Take all practical steps to improve the performance of its filtration system.

In order to obtain an extension to the initial exemption period, in addition to the required elements in Section 1416, the system should be in compliance with the coliform MCL, satisfy the above disinfection criteria and not have any evidence of waterborne disease outbreaks attributable to the treatment system at the end of that first exemption period. If at any point during the extended exemption period the system did not meet these conditions, the exemption should be withdrawn and the system should be subject to an enforcement action. In addition, the system must continue to be taking steps to improve the performance of its filtration system to achieve the criteria specified in the SWTR.

Once these minimum requirements are applied, the Primacy Agency should look at the other factors as described in Sections 9.3, 9.4, and 9.5.

9.3 Compelling Factors

Compelling factors are often associated with small systems. The major compelling factor tends to be economic. In some cases the compelling factor may not be solely economic, but rather the contractual and physical infeasibility of having a required treatment installed within the time period specified in the regulation. For example, it may not be feasible for a very large system to install filtration by June 1993 if required. In such cases exemptions are also appropriate. Additional considerations for small systems are presented in Appendix L.

If system improvements necessary to comply with the SWTR incur costs which the Primacy Agency determines pose an economic barrier to acquisition of necessary treatment, the system fulfills the criteria of demonstrating a compelling hardship which makes it unable to meet the treatment requirements. In such cases, the EPA believes it is reasonable to grant an exemption if the system also meets the criteria in 9.4 and 9.5.

The USEPA document, "Technologies and Costs for the Removal of Microbial Contaminants from Potable Water Supplies," contains costs associated with available treatment alternatives (USEPA, 1988b). Costs found in this document, or those generated from more site-specific conditions, can be used as the basis for determining the ability of a system to afford treatment. The total annual water production costs per household for a system can be estimated based on the household water usage and the production costs per thousand gallons. As estimated in the above cited USEPA document, each cent per thousand gallons of treated water is approximately equivalent to $1 per year per household if a household water usage of 100,000 gallons per year is assumed.[1] This estimate will need to be adjusted according to water usage for cases where the household usage differs from 100,000 gallons per year.

The following examples are presented to provide guidance in estimating costs for a system to upgrade its system or install filtration. This cost information could be used for determining whether a system might be eligible for an exemption.

Example 1

A water system which supplies an average daily flow of 0.05 mgd to a small urban community receives its water supply from a lake. The system currently provides disinfection with chlorine but does not provide filtration. The system reviewed its source water quality and found the characteristics to be as follows:

---

[1] This is the national average residential household consumption reported in: Final Descriptive Summary - 1986 Survey of Community Water Systems. October 23, 1987. USEPA: Office of Drinking Water.

Total coliforms	1,000/100 ml
Turbidity	10 - 13 NTU
Color	6 - 9 CU

Based upon the criteria in the SWTR, this source requires filtration and a review of the water quality criteria presented in Table 4-2 indicates that the treatment technique best suited to these source conditions is conventional treatment. A conventional package treatment plant with a capacity of 0.068 MGD may be purchased and put on line at a cost of $277/household-year not including real estate, piping or raw water pumping costs which may be significant depending on the plant location.[2] EPA has estimated that, on average, these costs might add another 50% depending on site specific factors (USEPA, 1989)

Thus the cost estimate for implementing filtration indicates that the increase in the average annual household water bill would be approximately $277 plus the cost of real estate, piping, and raw water pumping as needed. The incomes of people in the community and the current water bills can be reviewed by the Primacy Agency along with these estimated costs to determine if an undue economic hardship is incurred by these treatment methods. Upon determination that an economic hardship is incurred, the Primacy Agency may grant an exemption from filtration, provided that the system can assure the protection of the health of the community. However, if the water supply system for a nearby community meets the drinking water standards and there is the ability to hook up to that system, an exemption generally should not be granted unless such costs also presented an economic hardship.

Example 2

A large urban community, with a median annual income of $25,000 per family, is supplied with water from lakes and reservoirs. The community places an average daily demand of 3 mgd on the supply system. The watershed of the system is moderately populated and used for farming and

---

[2] Table VI-3 ("Technologies and Costs for the Removal of Microbial Contaminants From Potable Water Supplies," USEPA, 1988b) lists the total costs as 277.4 cents/1000 gal. Estimated costs for real estate, piping and raw water pumping as a function of site specific conditions are available in Table E-1, E-2, and E-3 of this same document.

grazing. The system currently provides filtration using diatomaceous earth filtration and disinfection with chloramines.

A review of the source and finished water quality was conducted to evaluate the plant's performance. The source water quality was determined to be:

Total coliforms	30 - 40/100 ml
Turbidity	2 - 3 NTU
Color	1 - 2 CU

Diatomaceous earth is therefore an acceptable filtration method.[3] However, review of the finished water showed that a residual in the distribution system is only maintained 80 percent of the time. In addition to this, coliforms were detected in 10 percent of the samples taken over the twelve month period. Inspection of the chlorination equipment showed the equipment is deteriorated. Review of the monthly reports showed that the coliforms appeared in the distribution system shortly after the chlorinators malfunctioned. This observation led to the conclusion that new disinfection facilities were needed.

The source water quality and available contact time after disinfection were then used to determine the most appropriate disinfectant for the system. As described in Section 5.5, ozone, chlorine or chlorine dioxide can be used as primary disinfectants given these conditions. A preliminary review of costs for applying the various disinfectants showed chlorine to be the most economical at a cost of \$2.8/household/year[4] (USEPA, 1988b). This cost does not include backup equipment; however, even with providing duplicate equipment doubling this cost to \$5.6/household/ year, the improvement incurs minimal cost and the Primacy Agency should not grant the system an exemption based on economic hardship.

---

[3] As determined from Table 4-2 of Section 4.

[4] Table VI-12 (USEPA, 1988b) lists a total cost of 2.8 cents/1000 gal for a plant capacity of 5.85 mgd.

$$\frac{(2.8 \text{ cents})}{(1{,}000 \text{ gal})} \quad \frac{(\$1/\text{household-year})}{(\text{cents}/1000 \text{ gal})} = \$2.8/\text{household-year}$$

9.4 Evaluation of Alternate Water Supply Sources

Systems which would incur very high costs for installing a required treatment to comply with the SWTR, should evaluate the possibility of using an alternate source. These alternate sources include:

- The use of ground water
- Connection to a nearby water purveyor
- Use of an alternate surface water supply

When considering the use of ground water, the purveyor must determine the capacity of the underlying aquifer for supplying the demand. The water quality characteristics of the aquifer must be evaluated to determine what treatment may be needed to meet existing standards. The cost of the well construction and treatment facilities must then be determined and converted into a yearly cost per household.

The connection to a nearby purveyor involves contacting the purveyor to determine their capacity and willingness to supply the water. Once it has been determined that the alternate source meets all applicable drinking water standards, the cost of the transmission lines, distribution system, and other facilities (e.g. disinfection, repumping, etc.) must then be determined and amortized into a yearly cost per household.

If the cost for using an alternate source is found by the Primacy Agency to present an economic hardship, and the purveyor can demonstrate that there will be no unreasonable risk to health, the Primacy Agency may grant an exemption to the SWTR for the purveyor and develop a schedule of compliance.

9.5 Protection of Public Health

Systems which apply for an exemption from the SWTR must demonstrate to the Primacy Agency that the health of the community will not be put at risk by the granting of such an exemption. A system should be able to provide adequate protection for the public health by meeting the minimum suggested EPA requirements in Section 9.2. However, a Primacy Agency may specify additional measures or criteria a system must meet to protect public health, depending on the particular circumstances. Systems with currently unfiltered surface water supplies which fail to meet the source

water quality criteria will be required to install filtration as part of their treatment process. However, it may take 3 to 5 years or more before the filtration system can be designed, constructed and begin operation, thereby justifying the granting of an exemption. During this period, possible interim measures which the system could take to further satisfy the Primacy Agency's concern include one or more of the following:

a. Use of higher disinfectant dosages without exceeding the TTHM MCL (even for systems not currently subject to this MCL)

b. Installation of a replacement or additional disinfection system which provides greater disinfection efficiency and which can be integrated into the new filtration plant

c. Increasing the monitoring and reporting to the Primacy Agency

d. Increasing protection of the watershed

e. Increasing the frequency of sanitary surveys

f. Temporarily purchasing water from a nearby water system

g. For small systems, temporary installation of a mobile filtration (package) plant

h. Increasing contact time by rerouting water through reservoirs

In some cases systems may be able to increase their disinfection dosages during the interim period to provide additional protection against pathogenic organisms. This alternative should be coupled with a requirement for increased monitoring for coliforms, HPC and disinfectant residual within the distribution system. However, disinfectant dosage should not be increased if this would result in a violation of the TTHM MCL, even for systems not currently subject to this MCL.

Systems which are planning to install filtration may be able to utilize a more efficient disinfectant that can later be integrated into the filter plant. Currently ozone and chlorine dioxide are considered to be the most efficient disinfectants.

For all systems which do not meet the source water quality criteria and must install filtration, EPA recommends that during the interim period the Primacy Agency increase its surveillance of the system and require

increased monitoring and reporting requirements to assure adequate protection of the public health.

Any required increases in watershed control and/or on-site inspections will not alleviate the need for more stringent disinfection requirements and increased monitoring of the effectiveness of the system employed. Their purpose would be to identify and control all sources of contamination so that the existing system will provide water of the best possible quality.

For some systems, it may be possible to purchase water from a nearby system on a temporary basis. This may involve no more than the use of existing interconnections or it may require the installation of temporary connections.

Trailer mounted filtration units (package plants) are sometimes available from state agencies for emergencies or may be rented or leased from equipment manufacturers.

Systems may also be required to supply bottled water or install point-of-entry (POE) treatment devices. For the reasons listed below, these alternatives should only be utilized if the previously mentioned alternatives are not feasible:

- In many states bottled water is subject only to the water quality requirements of the FDA as a beverage and not to the requirements of the Safe Drinking Water Act.

- Point-of-entry treatment devices are not currently covered by performance or certification requirements which would assure their effectiveness or performance.

If the installation of POE devices is required, the selection of the appropriate treatment device should be based upon a laboratory or field scale evaluation of the devices. A guide for testing the effectiveness of POE units in the microbiological purification of contaminated water is provided in Appendix N.

Several issues arise with the use of POE devices. These include establishing who or what agency (1) has the responsibility for ensuring compliance with standards; (2) retains ownership of the treatment units; (3) performs monitoring, analyses and maintenance; and (4) manages the

treatment program and maintains insurance coverage for damage and liability. It should also be considered that there is no significant increase in risk over centrally treated water.

These issues should be borne in mind when POE as a treatment alternative is being considered.

Systems with currently unfiltered surface water supplies which meet the source water quality criteria, but do not meet one or more of the other requirements for watershed control, sanitary survey, compliance with annual coliform MCL or disinfection by-product regulation(s), will be required to install filtration unless the deficiencies can be corrected within 48 months of promulgation of the SWTR. Interim protection measures include those previously listed.

Systems with currently unfiltered surface water supplies which meet the source water quality criteria and the site specific criteria but which do not meet the disinfection requirements, will be required to install filtration unless the disinfection requirements (adequate CT and/or disinfection system redundancy) can be met. During the interim period, available options include:

a. Temporary installation of a mobile treatment plant

b. Temporary purchase of water from a nearby purveyor

c. Increased monitoring of the system

d. Installation of temporary storage facilities to increase the disinfectant contact time

Currently filtered supplies which fail to meet the turbidity or disinfection performance criteria presented in Section 5 will be required to evaluate and upgrade their treatment facilities in order to attain compliance. During the interim period available options for improving the finished water quality include:

a. Use of a filter aid to improve filter effluent turbidities

b. Increased disinfectant dosages

c. The addition of an alternate disinfectant is an option after the disinfection by-products rule is promulgated

d. Reduction in filter loading rates with subsequent reduction in plant capacity

e. Installation of temporary storage facilities to increase disinfectant contact time

9.6 Notification to EPA

The SDWA requires that each Primacy Agency which grants an exemption notify EPA of the granting of this exemption. The notification must contain the reasons for the exemption, including the basis for the finding that the exemption will not result in an unreasonable risk to public health and document the need for the exemption.

REFERENCES

REFERENCES

Ali-Ani, M.; McElroy, J. M.; Hibler, C. P.; Hendricks, D. W. Filtration of Giardia Cysts and other Substances, Volume 3: Rapid Rate Filtration. EPA-600/2-85-027, U.S. Environmental Protection Agency, WERL, Cincinnati, Ohio, April, 1985.

American Public Health Association; American Water Works Association; Water Pollution Control Federation. Standard Methods for the Examination of Water and Wastewater, 16th ed., pp. 134-6, 298-310, 827-1038, 1985.

American Public Health Association; American Water Works Association; Water Pollution Control Federation. Standard Methods for the Examination of Water and Wastewater, 17th ed., 1989.

American Water Works Association. Manual of Water Supply Practices and Water Chlorination Principles and Practices, 1973.

American Water Works Association Research Foundation (AWWARF). A Summary of State Drinking Water Regulations and Plan Review Guidance. June, 1986.

Bader, H.; Hoigne, J. Determination of Ozone in Water by the Indigo Method, Water Research 15; 449-454, 1981.

Bellamy, W. D.; Lange, K. P.; Hendricks, D. W. Filtration of Giardia Cysts and Other Substances. Volume 1: Diatomaceous Earth Filtration. EPA-600/2-84-114, U.S. Environmental Protection Agency, Cincinnati, Ohio, 1984.

Bellamy, W. D.; Silverman, G. P.; Hendricks, D. W. Filtration of Giardia Cysts and Other Substances. Volume 2: Slow Sand Filtration. EPA-600/2--85-026, U.S. Environmental Protection Agency, MERL, Cincinnati, Ohio, April, 1985.

Bishop, S.; Craft, T. F.; Fisher, D. R.; Ghosh, M.; Prendiville, P.W.; Roberts, K. J.; Steimle, S.; Thompson, J. The Status of Direct Filtration, Committee Report. J.AWWA, 72(7):405-411, 1980.

Bouwer, H. Ground Water Hydrology. McGraw Hill Book Co., New York, pp. 339-356, 1978.

Brown, T. S.; Malina, J. F., Jr.; Moore, B. D. Virus Removal by Diatomaceous Earth Filtration - Part 1 & 2. J.AWWA 66(2):98-102, (12):735-738, 1974.

Bucklin, K.; Amirtharajah, A.; Cranston, K. Characteristics of Initial Effluent Quality and Its Implications for the Filter-to-Waste Procedure. AWWA Research Foundation Report. November, 1988.

Carlson, D.A.; Seabloom, R.W.; DeWalle, F.D.; Wetzler, T.F.; Evgeset, J.; Butler, R.; Wangsuthachart, S.; Wang, S. Ultraviolet Disinfection of Water for Small Water Systems. EPA/600/2-85-092, U.S. Environmental Protection Agency, Water Engineering Reserach Laboratory, Drinking Water Research Division, Cincinnati, Ohio, September, 1985.

Clark, R.M.; Regli, S. A Mathematical and Statistical Analysis for the Inactivation of Giardia lamblia by Free Chlorine. Submitted to the Journal of Environmental Science Engineering, 1989.

Clark, R.; Regli, S.; Black, D. Inactivation of Giardia lamblia by Free Chlorine: A Mathematical Model. Presented at AWWA Water Quality Technology Conference. St. Louis, Mo., November 1988.

Cleasby, J. L.; Hilmoe, D. J.; Dimitracopoulos, C. J. Slow-Sand and Direct In-Line Filtration of a Surface Water. J.AWWA, 76(12):44-55, 1984.

DeWalle, F. B.; Engeset, J.; Lawrence, W. Removal of Giardia lamblia Cysts by Drinking Water Plants. EPA-600/S2-84-069, United States Environmental Protection Agency, MERL, Cincinnati, Ohio, May 1984.

Fox, K. R.; Miltner, R. J.; Logsdon, G. S.; Dicks, D. L.; Drolet, L. F. Pilot Plant Exploration of Slow Rate Filtration. Presented at the AWWA Annual Conference Seminar, Las Vegas, Nevada, June 1983.

Fujioka, R.; Kungskulniti, N.; Nakasone, S. Evaluation of the Presence - Absence Test for Coliforms and the Membrane Filtration Method for Heterotrophic Bacteria. AWWA Technology Conference Proceedings, November, 1986.

Geldreich, E. Personal communication to Linda Averell, Malcolm Pirnie Engineers, Paramus, New Jersey, July 1989.

Great Lakes-Upper Mississippi River Board of State Public Health and Environmental Managers Committee. Recommended Standards for Water Works, 1987 Edition.

Hendricks, D.; Al-Ani, M.; Bellamy, W.; Hibler, C.; McElroy, J. Surrogate Indicators for Assessing Removal of Giardia Cysts, AWWA Water Quality Technology Conference, 1984.

Hoff, J. C. Inactivation of Microbial Agents by Chemical Disinfectants. EPA-600/S2-86-067, U.S. Environmental Protection Agency, Water Engineering Research Laboratory, Drinking Water Research Division, Cincinnati, Ohio, September 1986.

Hoffbuhr, J. W.; Blair, J.; Bartleson, M.; Karlin, R. Use of Particulate Analysis for Source and Water Treatment Evaluation. AWWA Water Quality Technology Conference Proceedings, November 1986.

Horn, J. B.; Hendricks, D. W. Removals of Giardia Cysts and other Particles from Low Turbidity Waters Using the Culligan Multi-Tech Filtra-

tion System. Engineering Research Center, Colorado State University, Unpublished, 1986.

Joost, R. D.; Long, B. W.; Jackson, L. Using Ozone as a Primary Disinfectant for the Tucson CAP Water Treatment Plant, presented at the IOA/PAC Ozone Conference, Monroe, MI, 1988.

Kuchta, J. M.; States, S. J.; McNamara, A. M.; Wadowsky, R. M.; Yee, R. B. Susceptibility of Legionella pneumophila to Chlorine in Tap Water. Appl. Environ. Microbiol., 46(5): 1134-1139, 1983.

Letterman, R. D. The Filtration Requirement in the Safe Drinking Water Act Amendments of 1986. U.S. EPA/AAAS Report, August 1986.

Logsdon, G. S.; Symons, J. M.; Hoye, Jr., R. L.; Arozarena, M. M. Alternative Filtration Methods for Removal of Giardia Cysts and Cyst Model. J.AWWA, 73:111-118, 1981.

Logsdon, G.; Thurman, V.; Frindt, E.; Stoecker, J. Evaluating Sedimentation and Various Filter Media for Removal of Giardia Cysts. J. AWWA, 77:2:61, 1985.

Logsdon, G. S. Report for Visit to Carrollton, Georgia, USEPA travel report, February 12, 1987a.

Logsdon, G. S. Comparison of Some Filtration Processes Appropriate for Giardia Cyst Removal. USEPA Drinking Water Research Division; Presented at Calgary Giardia Conference, Calgary; Alberta, Canada, February 23-25, 1987b.

Long, R. L. Evaluation of Cartridge Filters for the Removal of Giardia lamblia Cyst Models from Drinking Water Systems. J. Environ. Health, 45(5):220-225, 1983.

Markwell, D. D., and Shortridge, K. F. Possible Waterborne Transmission and Maintenance of Influenza Viruses in Domestic Ducks. Applied and Environmental Microbiology, Vol. 43, pp. 110-116, January, 1981.

Morand, J., M.; C. R. Cobb; R. M. Clark; Richard, G. S. Package Water Treatment Plants, Vol. 1, A performance Evaluation. EPA-600/2-80-008a, USEPA, MERL, Cincinnati, Ohio, July 1980.

Morand, J. M.; Young, M. J. Performance Characteristics of Package Water Treatment Plants, Project Summary. EPA-600/52-82-101, USEPA, MERL, Cincinnati, Ohio, March, 1983.

Muraca, P.; Stout, J. E.; Yu, V. L. Comparative Assessment of Chlorine, Heat, Ozone, and UV Light for Killing Legionella pneumophila Within a Model Plumbing System. Appl. Environ. Microbiol., 53(2):447-453, 1987.

Notestine, T., Hudson, J. Classification of Drinking Water Sources as Surface or Ground Waters. Final Project Report. Office of Environmental

Health Programs. Washington Department of Social and Health Services, August 1988.

Poynter, S. F. B.; Slade, J. S. The Removal of Viruses by Slow Sand Filtration, Prog. Wat. Tech. Vol. 9, pp. 75-88, Pergamon Press, 1977. Printed in Great Britain.

Randall, A.D. Movement of Bacteria From a River to a Municipal Well - A Case History. American Water Works Association Journal. Vol. 62, No. 11, p.716-720., November 1970.

Rice, E.W.; Hoff, J.C. Inactivation of Giardia lamblia cysts by Ultraviolet Radiation. Appl. Environ. Microbiol. 42: 546-547, 1981.

Robeck, G. G.; Clarke, N. A.; Dostal, K. A. Effectiveness of Water Treatment Processes in Virus Removal. J. AWWA, 54(10):1275-1290, 1962.

Robson, C.; Rice, R.; Fujikawa, E.; Farver, B. Status of U.S. Drinking Water Treatment Ozonation Systems, presented at IOA Conference, Myrtle Beach, SC, December 1988.

Rose, J. Cryptosporidium in Water; Risk of Protozoan Waterborne Transmission. Report prepared for the Office of Drinking Water, U.S. EPA, Summer, 1988.

Rubin, A. Factors Affecting the Inactivation of Giardia Cysts by Monochloramine and Comparison with other Disinfectants. Water Engineering Research Laboratory, Cincinnati, OH, March 1988a.

Rubin, A. "CT Products for the Inactivation of Giardia Cysts by Chlorine, Chloramine, Iodine, Ozone and Chlorine Dioxide" submitted for publication in J. AWWA, December 1988b.

Slezak, L.; Sims, R. The Application and Effectiveness of Slow Sand Filtration in the United States. J.AWWA, 76(12):38-43, 1984.

Sobsey, M. Detection and Chlorine Disinfection of Hepatitus A in Water. CR-813-024. EPA Quarterly Report. December 1988.

Stolarik, G.; Christie, D. Projection of Ozone C-T Values Los Angeles Aqueduct Filtration Plant, 1988.

U. S. Environmental Protection Agency, Office of Drinking Water, Criteria and Standards Division. Manual for Evaluating Public Drinking Water Supplies, 1971.

U. S. Environmental Protection Agency, Office of Drinking Water. Public Notification Handbook for Drinking Water Suppliers, May 1978.

U. S. Environmental Protection Agency, Office of Ground Water Protection. Guidelines for Applicants for State Wellhead Protection Program Assistance Funds Under the SDWA, June 1987a.

U. S. Environmental Protection Agency, Office of Ground Water Protection. Guidelines for Delineation of Wellhead Protection Area, June 1987b.

U. S. Environmental Protection Agency, Office of Drinking Water. Workshop on Emerging Technologies for Drinking Water Treatment, April, 1988a.

U. S. Environmental Protection Agency, Office of Drinking Water. Technologies and Costs for the Removal of Microbial Contaminants from Potable Water Supplies, October, 1988b.

World Health Organization Collaborating Center. Slow Sand Filtration of Community Water Supplies in Developing Countries. Report of an International Appraiser Meeting, Nagpur, India, Bulletin Series 16, September 15-19, 1980.

APPENDIX A

EPA CONSENSUS METHOD FOR *GIARDIA* CYST ANALYSIS

To begin the workgroups on testing, Jay Vasconcelos gave a slide presentation about the testing method used in the Region 10 Laboratory. The following pages and Appendix C summarize his talk.

Methods of Testing for Giardia in Water

(George (Jay) Vasconcelos, Regional Microbiologist, Region 10 Laboratory, Manchester, Washington)

Background:

Although recent development of an excystation technique by Drs. Bingham, Meyer, Rice and Schaefer could in future lead to developing cultural methods, at this time no reliable methods exist for culturing Giardia cysts from water samples. At present, the only practical method for determining the presence of cysts in water is by direct microscopic examination of sample concentrates.

Microscopic detection in water-sample concentrates isn't an ideal process. Finding and identifying the cysts relies almost entirely on the training, skill, experience and persistence of the examiner. (And it is a skill not widespread among water-supply laboratories.) But despite its limitations, microscopic identification is currently the best method we have.

Years ago, the basic assumption was made that in order to find Giardia cysts in water, some form of sample concentration was necessary. As early as 1956, labs were using membrane filters with a porosity of 0.45 µm. With few exceptions, these attempts were unsuccessful. The center for Disease Control has tried particulate filtration, with diatomaceous earth as the medium. This removed the cysts from the water, but the cysts couldn't be separated from the particles of diatomaceous earth.

With the recent increase in the incidence of waterborne giardiasis, further efforts have been made to improve the detection method. An ideal method would be one that recovers all cysts in a water sample rapidly, cheaply and simply; allows rapid detection, identification and quantification; and provides information on the viability of and/or infectivity potential of cysts detected.

Unfortunately, no such method exists. The methods presently available can be broadly separated into two general stages: primary concentration and processing (see Table 1 on next page), and detection and identification (see Table 2 on next page).

Methods of Testing for Giardia in Water (Continued...)

TABLE 1: PRIMARY CONCENTRATION AND PROCESSING METHODS

METHOD	INVESTIGATOR (S)	RESULTS
1. Membrane Filtration		
Cellulosic (47mm-0.45um)	Chang & Kabler USPHS, 1956	Generally unsucessful
Polycarbinate (293mm-5um)	Pyper, DuFrain & Henry Eng 1982, (unpublished)	Passing 1 gal/min @ 10 PSI. 15-1800 gal total.
2. Particulate Filtration (diatomaceous earth, sand, etc.)	Shaw et al, 1977 Juranek, 1979	Generally good removal but poor elution
3. Algae (Foerst) Centrifuge	Holman et al, 1983 DHHS, Washington	Good rapid recovery, but limited in field use.
4. Anionic and Cationic Exchange Resins	Brewer, Wright State UN. (unpublished)	Generally unsucessful
5. Epoxy-Fiberglass Balston Tube Filters (10"-6um)	Riggs, CDHS Lab, Berkley, CA (unpublished)	Overall recovery 20-80%
6. Microporous Yarnwoven Depth Filters (7 & 1um orlon & polypropylene)	Jakubowski, Erickson, 1979 & 1980, EPA-Cincinnati	Recovery 3-15% Extraction ave. 58%
7. Pellican Cassette System	Millipore Corp. (unpublished)	May be useful for processing filter washings
8. Filterwashing Apparatus	DuWalle, U. of Wash., 1982 (unpublished)	Claims 75% recovery from orlon filters

TABLE 2: DETECTION METHODS

METHOD	INVESTIGATORS(S)	RESULTS
1. Immunofluorescen DFA	Riggs, CSDHS Lab, Berkley, CA 1983	Good prep., Cross Rx
IFA	Sauch, EPA-Cincinnati Riggs, CSDS	Still under study
Monoclonal Antibodies	Riggs, CSDHS Sauch, EPA-Cincinnati (unpublished)	Still under study
2. ELISA Method	Hungar, J. Hopkins MD, 1983	Feces samples only
3. Brightfield/Phase Contrast	EPA Consensus method	Ongoing

Methods of Testing for Giardia in Water (Continued...)

Copies of Table 1 and Table 2 are also shown in Appendix C, along with further detail about the methods.

EPA Consensus Method:

In September, 1980, the EPA convened a workshop on Giardia methodology in Cincinnati. Its main purpose was to identify the best available methodology, and to agree on a reference method. The five labs in attendance recognized that any proposed method would be based in large part on opinions and personal preferences rather than on hard data, but that agreeing on a consensus method would promote uniformity and provide a basis for future comparisons. Our lab has modified the EPA consensus method slightly for our use. This method is outlined below.

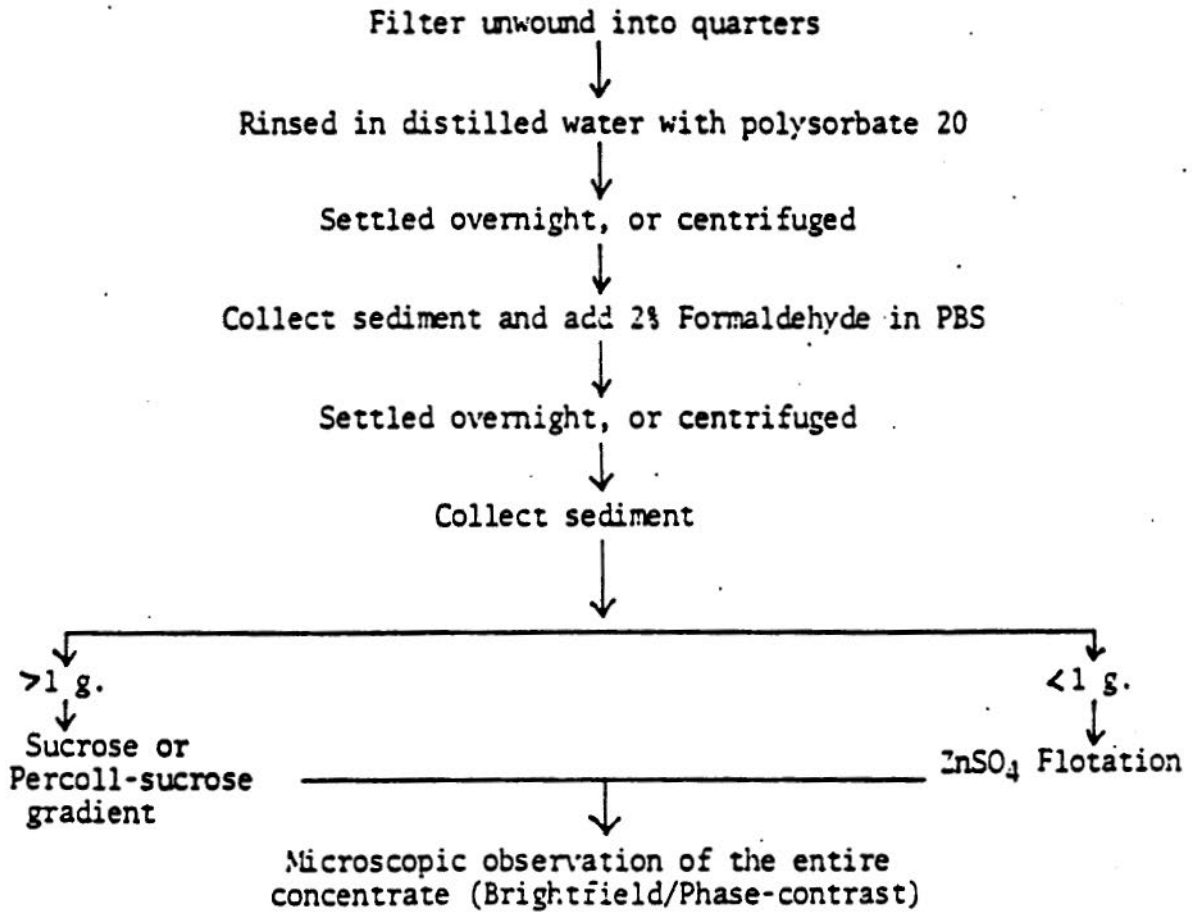

APPENDIX B
INSTITUTIONAL CONTROL OF *LEGIONELLA*

APPENDIX B
INSTITUTIONAL CONTROL OF LEGIONELLA

Legionella is a genus name for bacteria commonly found in lake and river waters. Some species of this genus have been identified as the cause of the disease legionellosis. In particular, Legionella pneumophila has been identified as the cause of Legionnaires disease, the pneumonia form of legionellosis and with Pontiac Fever, a nonpneumonia disease. Outbreaks of legionellosis are primarily associated with inhalation of water aerosols or, less commonly, with drinking water containing Legionella bacteria with specific virulence factors not yet identified. Foodborne outbreaks have not been reported (USEPA, 1985).

As discussed in this document, treatment requirements for disinfection of a municipal water supply are thought to provide at least a 3 log reduction of Legionella bacteria (see Section 3.2.2). However, some recontamination may occur in the distribution system due to cross connections and during installation and repair of water mains. It has been hypothesized that the low concentrations of Legionella entering buildings due to these sources may colonize and regrow in hot water systems (USEPA, 1985). Although all of the criteria required for colonization are not known, large institutions, such as hospitals, hotels, and public buildings with recirculating hot water systems seem to be the most susceptible. The control of Legionella in health care institutions, such as hospitals, is particularly important due to the increased susceptibility of many of the patients. The colonization and growth of Legionella in drinking water primarily occurs within the consumer's plumbing systems after the water leaves the distribution system. Therefore, the control of these organisms must be the consumer's responsibility. This appendix is intended to provide guidance to these institutions for the detection and control of the Legionella bacteria.

B.1 MONITORING

It is suggested that hospitals, and other institutions with potential for the growth of Legionella, conduct routine monitoring of

their hot water systems at least quarterly.[1] The analytical procedures for the detection of these organisms can be found in Section 912.I "Legionellaceae" of the 16th edition of Standard Methods. Samples should be taken at, or closely following, the hot water storage reservoir and from a number of shower heads. It is recommended that showers with the least frequent usage be included in the sampling program. Follow-up testing is suggested for all positive indications prior to the initiation of any remedial measures. If the the presence of Legionella is confirmed, then remedial measures should be taken. Although the regrowth of Legionella is commonly associated with hot water systems, hot and cold water interconnections may provide a pathway for cross contamination. For this reason, systems detecting Legionella in hot water systems should also monitor their cold water systems.

B.2 TREATMENT

Because the primary route of exposure to Legionella is probably inhalation, rather than ingestion, it is recommended that disinfection procedures include an initial shock treatment period to disinfect shower heads and hot water taps where the bacteria may colonize and later become airborne. The shock treatment period should also include disinfection of hot water tanks. After this time, a point-of entry treatment system can be installed to provide continual disinfection of the hot water system.

B.2.1 Initial Disinfection

The most applicable method for the initial disinfection of shower heads and water taps is heat eradication. The fittings can be removed and held at temperatures greater than 60 C for at least 24 hours. Disinfection of fittings can also be achieved by soaking or rinsing with a strong chlorine solution. When soaking the fittings, a minimum chlorine strength of 50 mg/L should be used for a period of no less than 3 hours. Rinsing

---

[1] Monitoring frequency based on the reported rate of Legionella regrowth observed during disinfection studies (USEPA, 1985).

with chlorine should be performed with more concentrated solutions. Care must be taken not to corrode the finished surface on the fittings. Commercially available bleaches, for example, are typically 5.25 percent chlorine by weight.

B.2.2 Long-Term Disinfection

Heat - Numerous studies have shown that increasing the hot water temperature to 50 - 70 C over a period of several hours may help to reduce and inhibit Legionella populations. However, some instances of regrowth after 3 to 6 months have been reported. In these cases, the authors have concluded that a periodic schedule of short-term temperature elevation in the hot water may be an effective control against legionellosis (USEPA, 1985; Muraca, 1986). Disinfection by this method also requires periodic flushing of faucets and shower heads with hot water. Although heat eradication is easily implemented and relatively inexpensive, a disadvantage is the potential need for periodic disinfection. The potential for scalding from the unusually hot water also exists (USEPA, 1985; Muraca, et al. 1986).

Chlorination - Several studies have suggested that a free chlorine residual of 4 mg/L will eradicate Legionella growth. There is, however, a possibility for recontamination in areas of the system where the chlorine residual drops below this level. A stringent monitoring program is therefore required to ensure that the proper residual is maintained throughout the system and under varying flow conditions. It may also be necessary to apply a large initial chlorine dose to maintain the 4 mg/L residual. This may cause problems of pipe corrosion and, depending on water quality, high levels of trihalomethanes (THMs).

Ozone - Ozone is the most powerful oxidant used in the potable water industry. One study indicated that an ozone dosage of 1 to 2 mg/L was sufficient to provide a 5 log reduction of Legionella (Muraca, et al. 1986). Ozone is generated by passing a high voltage current of electricity through a stream of dry air or oxygen. The use of high voltage electricity requires proper handling to avoid creating hazardous conditions. The ozone is applied by bubbling the ozone containing gas through the water in a chamber called a contactor.

One of the disadvantages of this system is its complexity. It requires a dry air or oxygen source, a generator, and a contactor sized to provide 2 to 5 minutes of contact time and an ambient ozone monitor. All materials in contact with the ozone must be constructed of special ozone resistant materials to prevent leakage. Leak detection is also required because of the toxic nature of ozone and possible explosive conditions if pure oxygen is used for generation.

Another disadvantage of ozonation is the rapid decomposition of ozone residuals. The half-life of ozone in drinking water is typically around 10 minutes. This makes it difficult, if not impossible, to maintain a residual throughout the water system and may require the use of a supplementary disinfectant such as chlorine or heat. For these reasons it is not thought that ozonation is viable for institutional applications.

Ultraviolet Irradiation - Ultraviolet (UV) light, in the 254 nanometer wavelength range can be used as a disinfectant. UV systems typically contain low-pressure mercury vapor lamps to maximize output in the 254 nm range. Water entering the unit passes through a clear cylinder while the lamp is on, exposing bacteria to the UV light. Because UV light can not pass through ordinary window glass, special glass or quartz sleeves are used to assure adequate exposure.

The intensity of UV irradiation is measured in microwatt-seconds per square centimeter (uW-s/cm2). Several studies have shown a 90 percent reduction of Legionella with a UV dosage of 1000 - 3000 uW-s/cm2, compared to 2000 to 5000 uW-s/cm2 for E. coli, Salmonella and Pseudomonas (USEPA, 1985). In another study, a 5 log reduction of Legionella was achieved at 30,000 uW-s/cm2; and the reduction was more rapid than with both ozone and chlorine disinfection (Muraca, et al. 1986).

The major advantage of UV disinfection is that it does not require the addition of chemicals. This eliminates the storage and feed problems associated with the use of chlorine, chlorine dioxide and chloramines. In addition, the only maintenance required is periodic cleaning of the quartz sleeve and replacement of bulbs. UV monitors are available which measure the light intensity reaching the water and provides a signal to the user when maintenance is required. These monitors are strongly suggested for any application of UV irradiation for disinfection. It should be noted,

however, that these monitors measure light intensity which may not be directly related to disinfection efficiency. The UV lamps should therefore not be operated past the manufacturers use rating even with a continuous UV monitor installed.

Another disadvantage of UV disinfection, as with ozonation, is that a residual is not provided. A supplementary disinfectant may therefore be required to provide protection throughout the system. In addition, turbidity may interfere with UV disinfection by blocking the passage of light to the microorganisms.

B.3 OTHER CONTROL METHODS

In addition to chemical and heat disinfection, there are system modifications which can be made to inhibit Legionella growth. Many institutions have large hot water tanks heated by coils located midway in the tank. This type of design may result in areas near the bottom of the tank which are not hot enough to kill Legionella. Designing tanks for more even distribution of heat may help limit bacterial colonization. In addition, sediment build-up in the bottom of storage tanks provides a surface for colonization. Periodic draining and cleaning may therefore help control growth. Additionally, other studies have found that hot water systems with stand-by hot water tanks used for meeting peak demands, still tested positive for Legionella despite using elevated temperature (55 C) and chlorination (2 ppm) (Fisher-Hoch, et al. 1984.) Stringent procedures for the cleaning, disinfection and monitoring of these stagnant tanks should be set up and followed on a regular basis.

In another study, it was reported that black rubber washers and gaskets supported Legionella growth by providing habitats protected from heat and chlorine. It was found, after replacement of the black rubber washers with Proteus 80 compound washers, that it was not possible to detect Legionella from any of the fixtures (Colbourne, et al. 1984).

B.4 CONCLUSIONS

Legionella bacteria have been identified as the cause of the disease legionellosis, of which the most serious form is Legionnaires Disease. Although conventional water treatment practices are sufficient to provide disinfection of Legionella, regrowth in buildings with large hot water heaters, and especially with recirculating hot water systems, is a significant problem. This problem is of particular concern to health care institutions, such as hospitals, where patients may be more susceptible to the disease.

This guideline suggests a program of quarterly monitoring for Legionella. If the monitoring program suggests a potential problem with these organisms, a two stage disinfection program is suggested consisting of an initial period of shock treatment followed by long term disinfection.

Four methods of disinfection for the control of Legionella were presented in this appendix; heat, chlorination, ozonation, and ultraviolet irradiation. All four of the methods have proven effective in killing Legionella. Ultraviolet irradiation and heat eradication are the suggested methods of disinfection due, primarily, to advantages in monitoring and maintenance. However, site specific factors may make chlorination or ozonation more feasible for certain applications. In addition, it is recommended that all outlets, fixtures and shower heads be inspected and all black rubber washers and gaskets replaced with materials which do not support the growth of Legionella organisms.

One problem associated with the application of point-of-entry treatment systems is the lack of an approved program for certifying performance claims. However, the National Sanitation Foundation (NSF), Ann Arbor, MI an unofficial, non-profit organization, does have a testing program to verify disinfection efficiencies and materials of construction. Certification by the NSF, or other equivalent organizations, is desirable when selecting a treatment system.

APPENDIX C

DETERMINATION OF DISINFECTANT CONTACT TIME

APPENDIX C
DETERMINATION OF DISINFECTANT CONTACT TIME

As indicated in Section 3, for pipelines, all fluid passing through the pipe is assumed to have a detention time equal to the theoretical or mean residence time at a particular flow rate. However, in mixing basins, storage reservoirs, and other treatment plant process units, utilities will be required to determine the contact time for the calculation of CT through tracer studies or other methods approved by the Primacy Agency.

For the purpose of determining compliance with the disinfection requirements of the SWTR, the contact time of mixing basins and storage reservoirs used in calculating CT should be the detention time at which 90 percent of the water passing through the unit is retained within the basin. This detention time was designated as T_{10} according to the convention adopted by Thirumurthi (1969). A profile of the flow through the basin over time can be generated by tracer studies. Information provided by these studies is used for estimating the detention time, T_{10}, for the purpose of calculating CT.

This appendix is divided into two sections. The first section presents a brief synopsis of tracer study methods, procedures, and data evaluation. In addition, examples are presented for conducting hypothetical tracer studies to determine the T_{10} contact time in a clearwell. The second section presents a method of determining T_{10} from theoretical detention times in systems where it is impractical to conduct tracer studies.

C.1 Tracer Studies

C.1.1 Flow conditions

Although detention time is proportional to flow, it is not generally a linear function. Therefore, tracer studies are needed to establish detention times for the range of flow rates experienced within each disinfectant section.

As discussed in Section 3.2, a single flow rate may not characterize the flow through the entire system. With a series of reservoirs,

clearwells, and storage tanks flow will vary between each portion of the system.

In filter plants, the plant flow is relatively uniform from the intake through the filters. An increase or reduction in the intake pumping capacity will impart a proportional change in flow through each process unit prior to and including the filters. Therefore, at a constant intake pumping rate flow variations between disinfectant sections within a treatment plant, excluding clearwells, are likely to be small, and the the design capacity of the plant, or plant flow, can be considered the nominal flow rate through each individual process unit within the plant. Clearwells may operate at a different flow rate than the rest of the plant, depending on the pumping capacity.

Ideally, tracer tests should be performed for at least four flow rates that span the entire range of flow for the section being tested. The flow rates should be separated by approximately equal intervals to span the range of operation, with one near average flow, two greater than average, and one less than average flow. The flows should also be selected so that the highest test flow rate is at leaste 91 percent of the highest flow rate expected to ever occur in that section. Four data points will assure a good definition of the section's hydraulic profile.

The results of the tracer tests performed for different flow rates should be used to generate plots of T_{10} vs. Q for each section in the system. A smooth line is drawn through the points on each graph to create a curve from which T_{10} may be read for the corresponding Q at peak hourly flow conditions. This procedure is presented in Section C.1.8.

It may not be practical for all systems to conduct studies at four flow rates. The number of tracer tests that are practical to conduct is dependent on site-specific restrictions and resources available to the system. Systems with limited resources can conduct a minimum of one tracer test for each disinfectant section at a flow rate of not less than 91 percent of the highest flow rate experienced at that section. If only one tracer test is performed, the detention time determined by the test may be used to provide a conservative estimate in CT calculations for that section for all flow rates less than or equal to the tracer test flow rate. T_{10} is <u>inversely</u> proportional to flow rate, therefore, the T_{10} at a

flow rate other than that which the tracer study was conducted (T_{10S}) can be determined by multiplying the T_{10} from the tracer study (T_{10T}) by the ratio of the tracer study flow rate to the desired flow rate, i.e.,

$$T_{10S} = T_{10T} \times Q_T/Q_D \text{ where}$$

T_{10S} = T_{10} at system flow rate
T_{10T} = T_{10} at tracer flow rate
Q_T = tracer study flow rate
Q_D = system flow rate

The most accurate tracer test results are obtained when flow is constant through the section during the course of the test. Therefore, the tracer study should be conducted at a constant flow whenever practical. For a treatment plant consisting of two or more equivalent process trains, a constant flow tracer test can be performed on a section of the plant by holding the flow through one of the trains constant while operating the parallel train(s) to absorb any flow variations. Flow variations during tracer tests in systems without parallel trains or with single clearwells and storage reservoirs are more difficult to avoid. In these instances, T_{10} should be recorded at the average flow rate over the course of the test.

C.1.2 Other Tracer Study Considerations

In addition to flow conditions, detention times determined by tracer studies are dependent on the water level in the contact basin. This is particularly pertinent to storage tanks, reservoirs, and clearwells which, in addition to being contact basins for disinfection are also often used as equalization storage for distribution system demands. In such instances, the water levels in the reservoirs vary to meet the system demands. The actual detention time of these contact basins will also vary depending on whether they are emptying or filling.

For some process units, especially sedimentation basins which are operated at a near constant level, that is, flow in equals flow out, the detention time determined by tracer tests is valid for calculating CT when the basin is operating at water levels greater than or equal to the level at which the test was performed. If the water level during testing is

higher than the normal operating level, the resulting concentration profile will predict an erroneously high detention time. Conversely, extremely low water levels during testing may lead to an overly conservative detention time. Therefore, when conducting a tracer study to determine the detention time, a water level at or slightly below, but not above, the normal minimum operating level is recommended.

For many plants, the water level in a clearwell or storage tank varies between high and low levels in response to distribution system demands. In such instances, in order to obtain a conservative estimate of the contact time, the tracer study should be conducted during a period when the tank level is falling (flow out greater than flow in). This procedure will provide a detention time for the contact basin which is also valid when the water level is rising (flow out less than flow in) from a level which is at or above the level when the T_{10} was determined by the tracer study. Whether the water level is constant or variable, the tracer study for each section should be repeated for several different flows, as described in the previous section.

For clearwells which are operated with extreme variations in water level, maintaining a CT to comply with inactivation requirements may be impractical. Under such operating conditions, a reliable detention time is not provided for disinfection. However, the system may install a weir to ensure a minimum water level and provide a reliable detention time.

Systems comprised of storage reservoirs that experience seasonal variations in water levels may perform tracer studies during the various seasonal conditions. For these systems, tracer tests should be conducted at several flow rates and representative water levels that occur for each seasonal condition. The results of these tests can be used to develop hydraulic profiles of the reservoir for each water level. These profiles can be plotted on the same axis of T_{10} vs. Q and may be used for calculating CT for different water levels and flow rates.

Detention time may also be influenced by differences in water temperature within the system. For plants with potential for thermal stratification, additional tracer studies are suggested under the various seasonal conditions which are likely to occur. The contact times determined by the tracer studies under the various seasonal conditions

should remain valid as long as no physical changes are made to the mixing basin(s) or storage reservoir(s).

As defined in Section 3.2.2, the portion of the system with a measurable contact time between two points of disinfection or residual monitoring is referred to as a section. For systems which apply disinfectant(s) at more than one point, or choose to profile the residual from one point of application, tracer studies should be conducted to determine T_{10} for each section containing process unit(s). The T_{10} for a section may or may not include a length of pipe and is used along with the residual disinfectant concentration prior to the next disinfectant application or monitoring point to determine the CT_{calc} for that section. The inactivation ratio for the section is then determined. The total inactivation and log inactivation achieved in the system can then be determined by summing the inactivation ratios for all sections as explained in Section 3.2.2.

For systems that have two or more units of identical size and configuration, tracer studies only need to be conducted on one of the units. The resulting graph of T_{10} vs. flow can be used to determine T_{10} for all identical units.

Systems with more than one section in the treatment plant may determine T_{10} for each section

- by individual tracer studies through each section, or
- by one tracer study across the system

If possible, tracer studies should be conducted on each section to determine the T_{10} for each section. In order to minimize the time needed to conduct studies on each section, the tracer studies should be started at the last section of the treatment train prior to the first customer and completed with the first section of the system. Conducting the tracer studies in this order will prevent the interference of residual tracer material with subsequent studies.

However, it may not always be practical for systems to conduct tracer studies for each section because of time and manpower constraints. In these cases, one tracer study may be used to determine the T_{10} values

for all of the sections at one flow rate. This procedure involves the following steps:

1. Add tracer at the beginning of the furthest upstream disinfection section.

2. Measure the tracer concentration at the end of each disinfection section.

3. Determine the T_{10} to each monitoring point as outlined in the data evaluation examples presented in Section C.1.7.

4. Subtract T_{10} values of each of the upstream sections from the overall T_{10} value to determine the T_{10} of each downstream section.

This approach is valid for a series of two or more consecutive sections as long as all process units within the sections experience the same flow condition. This approach is illustrated by Hudson (1975) in which step-dose tracer tests were employed to evaluate the baffling characteristics of flocculators and settling basins at six water treatment plants. At one plant, tracer chemical was added to the rapid mix, which represented the beginning of the furthest upstream disinfection section in the system. Samples were collected from the flocculator and settling basin outlets and analyzed to determine the residence-time characteristics for each section. Tracer measurements at the flocculator outlet indicated an approximate T_{10} of 5 minutes through the rapid mix, interbasin piping and flocculator. Based on tracer concentration monitoring at the settling basin outlet, an approximate T_{10} of 70 minutes was determined for the combined sections, including the rapid mix, interbasin piping, flocculator, and settling basin. The flocculator T_{10} of 5 minutes was subtracted from the combined sections' T_{10} of 70 minutes, to determine the T_{10} for the settling basin alone, 65 minutes.

This approach may also be applied in cases where disinfectant application and/or residual monitoring is discontinued at any point between two or more sections with known T_{10} values. These T_{10} values may be summed to obtain an equivalent T_{10} for the combined sections.

For ozone contactors, flocculators or any basin containing mixing, tracer studies should be conducted for the range of mixing used in the

process. In ozone contactors, air or oxygen should be added in lieu of ozone to prevent degradation of the tracer. The flow rate of air or oxygen used for the contactor should be applied during the study to simulate actual operation. Tracer studies should then be conducted at several air/oxygen to water ratios to provide data for the complete range of ratios used at the plant. For flocculators, tracer studies should be conducted for various mixing intensities to provide data for the complete range of operations.

C.1.3 Tracer Study Methods

This section discusses the two most common methods of tracer addition employed in water treatment evaluations, the step-dose method and the slug-dose method. Tracer study methods involve the application of chemical dosages to a system and tracking the resulting effluent concentration as a function of time. The effluent concentration profile is evaluated to determine the detention time, T_{10}.

While both tracer test methods can use the same tracer materials and involve measuring the concentration of tracer with time, each has distinct advantages and disadvantages with respect to tracer addition procedures and analysis of results.

The step-dose method entails introduction of a tracer chemical at a constant dosage until the concentration at the desired end point reaches a steady-state level. Step-dose tracer studies are frequently employed in drinking water applications for the following reasons:

- the resulting normalized concentration vs. time profile is directly used to determine, T_{10}, the detention time required for calculating CT
- very often, the necessary feed equipment is available to provide a constant rate of application of the tracer chemical

One other advantage of the step-dose method is that the data may be verified by comparing the concentration versus elapsed time profile for samples collected at the start of dosing with the profile obtained when the tracer feed is discontinued.

Alternatively, with the slug-dose method, a large instantaneous dose of tracer is added to the incoming water and samples are taken at the exit of the unit over time as the tracer passes through the unit. A disadvantage of this technique is that very concentrated solutions are needed for the dose in order to adequately define the concentration versus time profile. Intensive mixing is therefore required to minimize potential density-current effects and to obtain a uniform distribution of the instantaneous tracer dose across the basin. This is inherently difficult under water flow conditions often existing at inlets to basins. Other disadvantages of using the slug-dose method include:

- the concentration and volume of the instantaneous tracer dose must be carefully computed to provide an adequate tracer profile at the effluent of the basin
- the resulting concentration vs. time profile cannot be used to directly determine T_{10} without further manipulation
- a mass balance on the treatment section is required to determine whether the tracer was completely recovered

One advantage of this method is that it may be applied where chemical feed equipment is not available at the desired point of addition, or where the equipment available does not have the capacity to provide the necessary concentration of the chosen tracer chemical. Although, in general, the step-dose procedure offers the greatest simplicity, both methods are theoretically equivalent for determining T_{10}. Either method is acceptable for conducting drinking water tracer studies, and the choice of the method may be determined by site-specific constraints or the system's experience.

C.1.4 Tracer Selection

An important step in any tracer study is the selection of a chemical to be used as the tracer. Ideally, the selected tracer chemical should be readily available, conservative (that is, not consumed or removed during treatment), easily monitored, and acceptable for use in potable water supplies. Historically, many chemicals have been used in tracer studies that do not satisfy all of these criteria, including potassium permanganate, alum, chlorine, and sodium carbonate. However, chloride and fluoride are

the most common tracer chemicals employed in drinking water plants that are nontoxic and approved for potable water use. Rhodamine WT can be used as a fluorescent tracer in water flow studies in accordance with the following guidelines:

- Raw water concentrations should be limited to a maximum concentration of 10 mg/L.
- Drinking water concentations should not exceed 0.1 ug/L.
- Studies which results in human exposure to the dye must be brief and infrequent.
- Concentrations as low as 2 ug/L can be used in tracer studies because of the low detection level in the range of 0.1 to 0.2 ug/L.

The use of Rhodamine B as a tracer in water flow studies is not recommended by the EPA.

The choice of a tracer chemical can be made based, in part, on the selected dosing method and also on the availability of chemical feeding equipment. For example, the high density of concentrated salt solutions and their potential for inducing density currents, usually precludes chloride and fluoride as the selected chemical for slug-dose tracer tests.

Fluoride can be a convenient tracer chemical for step-dose tracer tests of clearwells because it is frequently applied for finished water treatment. However, when fluoride is used in tracer tests on clarifiers, allowances should be made for fluoride that is absorbed on floc and settles out of water (Hudson, 1975). Additional considerations when using fluoride in tracer studies include:

- it is difficult to detect at low levels
- many states impose a finished water limitation of 1 mg/L
- the federal secondary and primary drinking water standards (MCLs) for fluoride are 2 and 4 mg/L, respectively

The use of fluoride is only recommended in cases where the feed equipment is already in place for safety reasons.

In instances where only one of two or more parallel units is tested, flow from the other units would dilute the tracer concentration prior to leaving the plant and entering the distribution system. Therefore, the impact of drinking water standards on the use of fluoride and other tracer chemicals can be alleviated in some cases.

C.1.5 Tracer Addition

The tracer chemical should be added at the same point(s) in the treatment train as the disinfectant to be used in the CT calculations.

C.1.5.1 Step-dose Method

The duration of tracer addition is dependent on the volume of the basin, and hence, its theoretical detention time. In order to approach a steady-state concentration in the water exiting the basin, tracer addition and sampling should usually be continued for a period of two to three times the theoretical detention time (Hudson, 1981). It is not necessary to reach a steady state concentration in the exiting water to determine T_{10}, however, it is necessary to determine tracer recovery. It is recommended that the tracer recovery be determined to identify hydraulic characteristics or density problems. Generally, a 90 percent recovery is considered to provide reliable results for the evaluation of T_{10}.

In all cases, the tracer chemical should be dosed in sufficient concentration to easily monitor a residual at the basin outlet throughout the test. The required tracer chemical concentration, is generally dependent upon the nature of the chosen tracer chemical, including its background concentration, and the mixing characteristics of the basin to be tested. Recommended chloride doses on the order of 20 mg/L (Hudson, 1975) should be used for step-method tracer studies where the background chloride level is less than 10 mg/L. Also, fluoride concentrations as low as 1.0 to 1.5 mg/L are practical when the raw water fluoride level is not significant (Hudson, 1975). However, tracer studies conducted on systems suffering from serious shortcircuiting of flow may require substantially larger step-doses. This would be necessary to detect the tracer chemical and to adequately define the effluent tracer concentration profile.

C.1.5.2 Slug-dose Method

The duration of tracer measurements using the slug-dose method is also dependent on the volume of the basin, and hence, its theoretical detention time. In general, samples should be collected for at least twice the basin's theoretical detention time, or until tracer concentrations are detected near background levels. In order to get reliable results for T_{10} values using the slug-dose method, it is recommended that the total mass of tracer recovered be approximately 90 percent of the mass applied. This guideline presents the need to sample until the tracer concentration recedes to the background level. The total mass recovered during testing will not be known until completion of the testing and analysis of the data collected. The sampling period needed is very site specific. Therefore, it may be helpful to conduct a first run tracer test as a screen to identify the appropriate sampling period for gathering data to determine T_{10}.

Tracer addition for slug-dose method tests should be instantaneous and provide uniformly mixed distribution of the chemical. Tracer addition is considered instantaneous if the dosing time does not exceed 2 percent of the basin's theoretical detention time (Marske and Boyle, 1973). One recommended procedure for achieving instantaneous tracer dosing is to apply the chemical by gravity flow through a funnel and hose apparatus. This method is also beneficial because it provides a means of standardization, which is necessary to obtain reproducible results.

The mass of tracer chemical to be added is determined by the desired theoretical concentration and basin size. The mass of tracer added in slug-dose tracer tests should be the minimum mass needed to obtain detectable residual measurements to generate a concentration profile. As a guideline, the theoretical concentration for the slug-dose method should be comparable to the constant dose applied in step-dose tracer tests, i.e., 10 to 20 mg/L and 1 to 2 mg/L for chloride and fluoride, respectively. The maximum mass of tracer chemical needed is calculated by multiplying the theoretical concentration by the total basin volume. This is appropriate for systems with high dispersion and/or mixing. This quantity is diluted as required to apply an instantaneous dose, and minimize density effects. It should be noted that the mass applied is not

likely to get completely mixed throughout the total volume of the basin. Therefore, the detected concentration might exceed theoretical concentrations based on the total volume of the basin. For these cases, the mass of chemical to be added can be determined by multiplying the theoretical concentration by only a portion of the basin volume. An example of this is shown in Section C.1.7.2 for a slug-dose tracer study. In cases where the tracer concentration in the effluent must be maintained below a specified level, it may be necessary to conduct a preliminary test run with a minimum tracer dose to identify the appropriate dose for determining T_{10} without exceeding this level.

C.1.6 Test Procedure

In preparation for beginning a tracer study, the raw water background concentration of the chosen tracer chemical must be established. The background concentration is essential, not only for aiding in the selection of the tracer dosage, but also to facilitate proper evaluation of the data.

The background tracer concentration should be determined by monitoring for the tracer chemical prior to beginning the test. The sampling point(s) for the pre-tracer study monitoring should be the same as the points to be used for residual monitoring to determine CT values. The monitoring procedure is outlined in the following steps:

- If the tracer chemical is normally added for treatment, discontinue its addition to the water in sufficient time to permit the tracer concentration to recede to its background level before the test is begun.

- Prior to the start of the test, regardless of whether the chosen tracer material is a treatment chemical, the tracer concentration in the water is monitored at the sampling point where the disinfectant residual will be measured for CT calculations.

- If a background tracer concentration is detected, monitor it until a constant concentration, at or below the raw water background level is achieved. This measured concentration is the baseline tracer concentration.

Following the determination of the tracer dosage, feed and monitoring point(s), and a baseline tracer concentration, tracer testing can begin.

Equal sampling intervals, as could be obtained from automatic sampling, are not required for either tracer study method. However, using equal sample intervals for the slug-dose method can simplify the analysis of the data. During testing, the time and tracer residual of each measurement should also be recorded on a data sheet. In addition, the water level, flow, and temperature should be recorded during the test.

C.1.6.1 Step-dose Method

At time zero, the tracer chemical feed will be started and left at a constant rate for the duration of the test. Over the course of the test, the tracer residual should be monitored at the required sampling point(s) at a frequency determined by the overall detention time and site specific considerations. As a general guideline, sampling at intervals of 2 to 5 minutes should provide data for a well-defined plot of tracer concentration vs. time. If on-site analysis is available, less frequent residual monitoring may be possible until a change in residual concentration is first detected. As a guideline, in systems with a theoretical detention time greater than 4 hours, sampling may be conducted every 10 minutes for the first 30 minutes, or until a tracer concentration above the baseline level is first detected. In general, shorter sampling intervals enable better characterization of concentration changes; therefore, sampling should be conducted at 2 to 5-minute intervals from the time that a concentration change is first observed until the residual concentration reaches a steady-state value. A reasonable sampling interval should be chosen based on the overall detention time of the unit being tested.

If verification of the test is desired, the tracer feed should be discontinued, and the receding tracer concentration at the effluent should be monitored at the same frequency until tracer concentrations corresponding to the background level are detected. The time at which tracer feed is stopped is time zero for the receding tracer test and must be noted. The receding racer test will provide a replicate set of measurements which can be compared with data derived from the rising tracer concentration versus time curve. For systems which currently feed the tracer chemical,

the receding curve may be generated from the time the feed is turned off to determine the background concentration level.

C.1.6.2 Slug-dose Method

At time zero for the slug-dose method, a large instantaneous dose of tracer will be added to the influent of the unit. The same sampling locations and frequencies described for step-dose method tests also apply to slug-dose method tracer studies. One exception with this method is that the tracer concentration profile will not equilibrate to a steady state concentration. Because of this, the tracer should be monitored frequently enough to ensure acquisition of data needed to identify the peak tracer concentration.

Slug-dose method tests should be checked by performing a material balance to ensure that all of the tracer fed is recovered, or, mass applied equals mass discharged.

C.1.7 Data Evaluation

Data from tracer studies should be summarized in tables of time and residual concentration. These data are then analyzed to determine the detention time, T_{10}, to be used in calculating CT. Tracer test data from either the step or slug-dose method can be evaluated graphically, numerically, or by a combination of these techniques.

C.1.7.1 Step-dose Method

The graphical method of evaluating step-dose test data involves plotting a graph of dimensionless concentration versus time and reading the value for T_{10} directly from the graph at the appropriate dimensionless concentration. Alternatively, the data from step-dose tracer studies may be evaluated numerically by developing a semi-logarithmic plot of the dimensionless data. The semi-logarithmic plot allows a straight line to be drawn through the data. The resulting equation of the line is used to calculate the T_{10} value, assuming that the correlation coefficient indicates a good statistical fit (0.9 or above). Scattered data points from step-dose tracer tests are discredited by drawing a smooth curve through the data.

An illustration of the T_{10} determination will be presented in an example of the data evaluation required for a clearwell tracer study.

C.1.7.2 Slug-dose Method

Data from slug-dose tracer tests is analyzed by converting it to the mathematically equivalent step-dose data and using techniques discussed in Section C.1.7.1 to determine T_{10}. A graph of dimensionless concentration versus time should be drawn which represents the results of a slug-dose tracer test. The key to converting between the data forms is obtaining the total area under the slug-dose data curve. This area is found by graphically or numerically intergrating the curve. The conversion to step-dose data is then completed in several mathematical steps involving the total area.

A graphical technique for converting the slug-dose data involves physically measuring the area using a planimeter. The planimeter is an instrument used to measure the area of a plane closed curve by tracing its boundary. Calibration of this instrument to the scale of the graph is required to obtain meaningful readings.

The rectangle rule is a simple numerical intergration method which approximates the total area under the curve as the sum of the areas of individual rectangles. These rectangles have heights and widths equal to the residual concentration and sampling interval (time) for each data point on the curve, respectively. Once the data has been converted, T_{10} may be determined in the same manner as data from step-dose tracer tests.

Slug-dose concentration profiles can have many shapes, depending on the hydraulics of the basin. Therefore, slug-dose data points should not be discredited by drawing a smooth curve through the data prior to its conversion to step-dose data. The steps and specific details involved with evaluating data from both tracer study methods are illustrated in the following examples.

Example for Determining T_{10} in a Clearwell

Two tracer studies employing the step-dose and slug-dose methods of tracer addition were conducted for a clearwell with a theoretical detention time, T, of 30 minutes at an average flow of 2.5 MGD. Because fluoride is added at the inlet to the clearwell as a water treatment chemical, necessary feed equipment was in place for dosing a constant

concentration of fluoride throughout the step-dose tracer test. Based on this convenience, fluoride was chosen as the tracer chemical for the step-dose method test. Fluoride was also selected as the tracer chemical for the slug-dose method test. Prior to the start of testing, a fluoride baseline concentration of 0.2 mg/L was established for the water exiting the clearwell.

Step-dose Method Test

For the step-dose test a constant fluoride dosage of 2.0 mg/L was added to the clearwell inlet. Fluoride levels in the clearwell effluent were monitored and recorded every 3 minutes. The raw tracer study data, along with the results of further analyses are shown in Table C-1.

The steps in evaluating the raw data shown in the first column of Table C-1 are as follows. First, the baseline fluoride concentration, 0.2 mg/L, is subtracted from the measured concentration to give the fluoride concentration resulting from the tracer study addition alone. For example, at elapsed time = 39 minutes, the tracer fluoride concentration, C, is obtained as follows:

$$C = C_{measured} - C_{baseline}$$

$$= 1.85 \text{ mg/L} - 0.2 \text{ mg/L}$$

$$= 1.65 \text{ mg/L}$$

This calculation was repeated at each time interval to obtain the data shown in the third column of Table C-1. As indicated, the fluoride concentration rises from 0 mg/L at t = 0 minutes to the applied fluoride dosage of 2 mg/L, at t = 63 minutes.

The next step is to develop dimensionless concentrations by dividing the tracer concentrations in the second column of Table C-1 by the applied fluoride dosage, Co = 2 mg/L. For time = 39 minutes, C/Co is calculated as follows:

$$C/Co = (1.65 \text{ mg/L})/(2.0 \text{ mg/L})$$

$$= 0.82$$

The resulting dimensionless data, presented in the fourth column of Table C-1, is the basis for completing the determination of T_{10} by either the graphical or numerical method.

TABLE C-1

CLEARWELL DATA--STEP-DOSE TRACER TEST[1,2,3]

t, minutes	Fluoride Concentration		
	Measured, mg/L	Tracer, mg/L	Dimensionless, C/Co
0	0.20	0	0
3	0.20	0	0
6	0.20	0	0
9	0.20	0	0
12	0.29	0.09	0.045
15	0.67	0.47	0.24
18	0.94	0.74	0.37
21	1.04	0.84	0.42
24	1.44	1.24	0.62
27	1.55	1.35	0.68
30	1.52	1.32	0.66
33	1.73	1.53	0.76
36	1.93	1.73	0.86
39	1.85	1.65	0.82
42	1.92	1.72	0.86
45	2.02	1.82	0.91
48	1.97	1.77	0.88
51	1.84	1.64	0.82
54	2.06	1.86	0.93
57	2.05	1.85	0.92
60	2.10	1.90	0.95
63	2.14	1.94	0.96

Notes:

1. Baseline conc. = 0.2 mg/L, fluoride dose = 2.0 mg/L
2. Measured conc. = Tracer conc. + Baseline conc.
3. Tracer conc. = Measured conc. - Baseline conc.

In order to determine T_{10} by the graphical method, a plot of C/Co vs. time should be generated using the data in Table C-1. A smooth curve should be drawn through the data as shown on Figure C-1.

T_{10} is read directly from the graph at a dimensionless concentration (C/Co) corresponding to the time for which 10 percent of the tracer has passed at the effluent end of the contact basin (T_{10}). For step-dose method tracer studies, this dimensionless concentration is C/Co = 0.10 (Levenspiel, 1972).

T_{10} should be read directly from Figure C-1 at C/Co = 0.1 by first drawing a horizontal line (C/Co = 0.1) from the Y-axis (t = 0) to its intersection with the smooth curve drawn through the data. At this point of intersection, the time read from the X-axis is T_{10} and may be found by extending a vertical line downward to the X-axis. These steps were performed as illustrated on Figure C-1, resulting in a value for T_{10} of approximately 13 minutes.

For the numerical method of data analysis, several additional steps are required to obtain T_{10} from the data in the fourth column of Table C-1. The forms of data necessary for determining T_{10} through a numerical solution are $\log_{10}(1-C/Co)$ and t/T, the elapsed time divided by the theoretical residence time. These are obtained by performing the required mathematical operations on the data in the fourth column of Table C-1. For example, recalling that the theoretical detention time, T, is 30 minutes, the values for $\log_{10}$ (1-C/Co) and t/T are computed as follows for the data at t = 39 minutes:

$$\log_{10}(1-C/Co) = \log_{10}(1-0.82)$$

$$= \log_{10}(0.18)$$

$$= -0.757$$

$$t/T = 39 \text{ min}/30 \text{ min} = 1.3$$

This calculation was repeated at each time interval to obtain the data shown in Table C-2. These data should be linearly regressed as $\log_{10}(1-C/Co)$ versus t/T to obtain the fitted straight-line parameters to the following equation:

FIGURE C-1

C/Co vs., Time

Graphical Analysis for T10

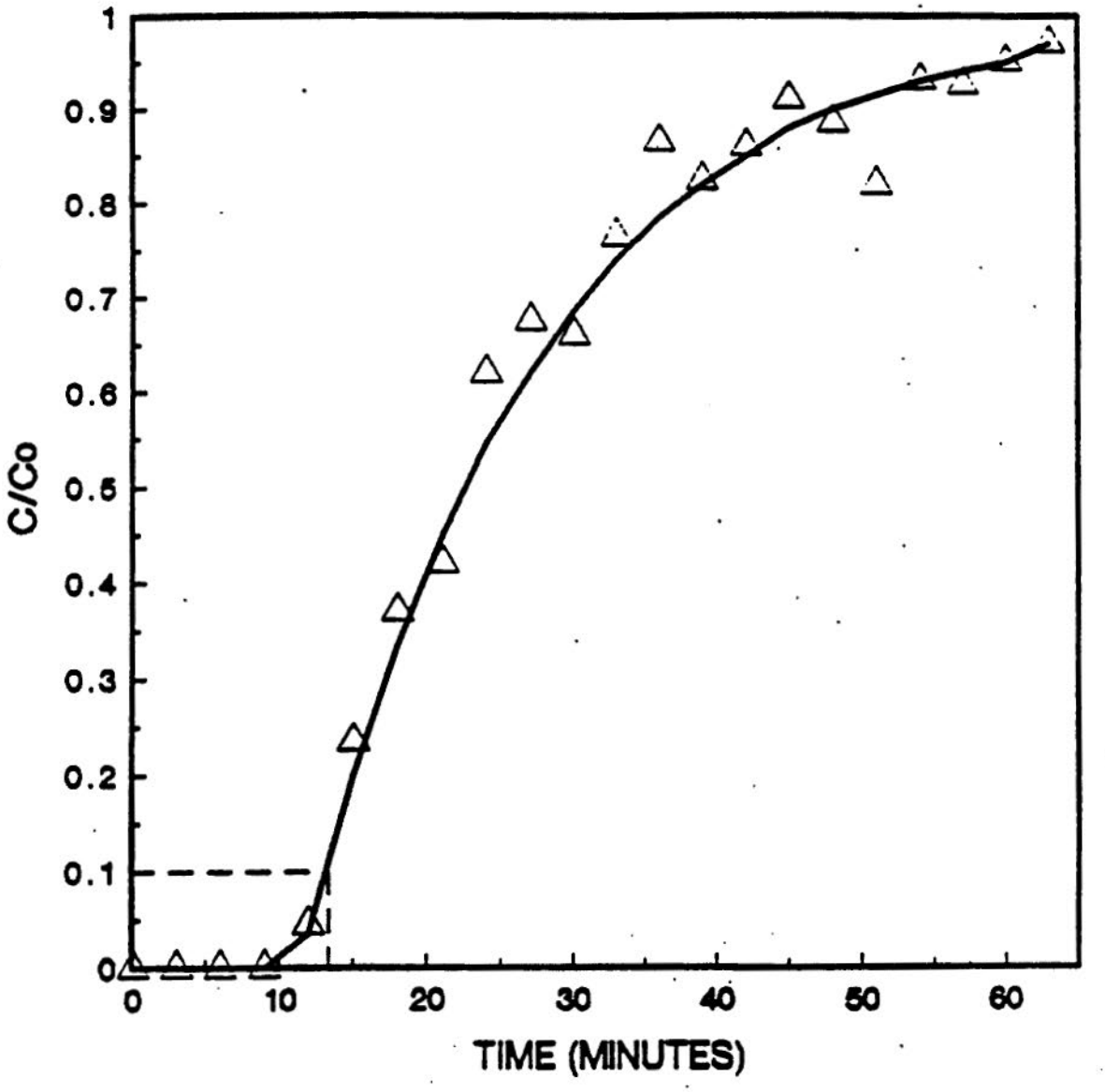

TABLE C-2

DATA FOR NUMERICAL DETERMINATION OF T_{10}

t/T	$\log_{10}(1-C/Co)$
0	0
0.1	0
0.2	0
0.3	0
0.4	-0.020
0.5	-0.116
0.6	-0.201
0.7	-0.237
0.8	-0.420
0.9	-0.488
1.0	-0.468
1.1	-0.629
1.2	-0.870
1.3	-0.757
1.4	-0.854
1.5	-1.046
1.6	-0.939
1.7	-0.745
1.8	-1.155
1.9	-1.125
2.0	-1.301
2.1	-1.532

$$\log_{10}(1\text{-}C/Co) = m(t/T) + b \qquad (1)$$

In equation 1, m and b are the slope and intercept, respectively, for a plot of $\log_{10}(1\text{-}C/Co)$ vs. t/T. This equation can be used to calculate T_{10}, assuming that the correlation coefficient for the fitted data indicates a good statistical fit (0.9 or above).

A linear regression analysis was performed on the data in Table C-2, resulting in the following straight-line parameters:

slope = m = -0.774

intercept = b = 0.251

correlation coefficient = 0.93

Although these numbers were obtained numerically, a plot of $\log_{10}(1\text{-}C/Co)$ versus t/T is shown for illustrative purposes on Figure C-2 for the data in Table C-2. In this analysis, data for time = 0 through 9 minutes were excluded because fluoride concentrations above the baseline level were not observed in the clearwell effluent until t = 12 minutes.

Equation 1 is then rearranged in the following form to facilitate a solution for T_{10}:

$$T_{10}/T = (\log_{10}(1 - 0.1) - b)/m \qquad (2)$$

In equation 2, as with graphical method, T_{10} is determined at the time for which C/Co = 0.1. Therefore, in equation 2, C/Co has been replaced by 0.1 and t (time) by T_{10}. To obtain a solution for T_{10}, the values of the slope, intercept, and theoretical detention time are substituted as follows:

$$T_{10}/30 \text{ min.} = (\log_{10}(1 - 0.1) - 0.251)/(-0.774)$$

$$T_{10} = 12 \text{ minutes}$$

In summary both the graphical and numerical methods of data reduction resulted in comparable values for T_{10}. With the numerical method, T_{10} was determined as the solution to an equation based on the

straight-line parameters to a linear regression analysis of the tracer study data instead of an "eyeball" estimate from a data plot.

Slug-dose Method Test

A slug-dose tracer test was also performed on the clearwell at a flow rate of 2.5 mgd. A theoretical clearwell fluoride concentration of 2.2 mg/L was selected. The fluoride dosing volume and concentration were determined from the following considerations:

Dosing Volume

- The fluoride injection apparatus consisted of a funnel and a length of copper tubing. This apparatus provided a constant volumetric feeding rate of 7.5 liters per minute (L/min) under gravity flow conditions.

- At a flow rate of 2.5 mgd, the clearwell has a theoretical detention time of 30 minutes. Since the duration of tracer injection should be less than 2 percent of the clearwell's theoretical detention time for an instantaneous dose, the maximum duration of fluoride injection was:

  Max. dosing time = 30 minutes x .02 = 0.6 minutes

- At a dosing rate of 7.5 L/min, the maximum fluoride dosing volume is calculated to be:

  Max. dosing volume = 7.5 L/min. x 0.6 minutes = 4.5 L

  For this tracer test, a dosing volume of 4 liters was selected, providing an instantaneous fluoride dose in 1.8 percent of the theoretical detention time.

Fluoride Concentration

- The theoretical detention time of the clearwell, 30 minutes, was calculated by dividing the clearwell volume, 52,100 gallons or 197,200 liters, by the average flow rate through the clearwell, 2.5 mgd.

- Assuming the tracer is completely dispersed throughout the total volume of the clearwell, the mass of fluoride required to achieve a theoretical concentration of 2.2 mg/L is calculated as follows:

  $$\text{Fluoride mass (initial)} = 2.2 \text{ mg/L} \times 197{,}200 \text{ L} \times \frac{1 \text{ g}}{1000 \text{ mg}} = 434 \text{g}$$

FIGURE C-2

1-C/Co vs. t/T

Numerical Analysis for T10

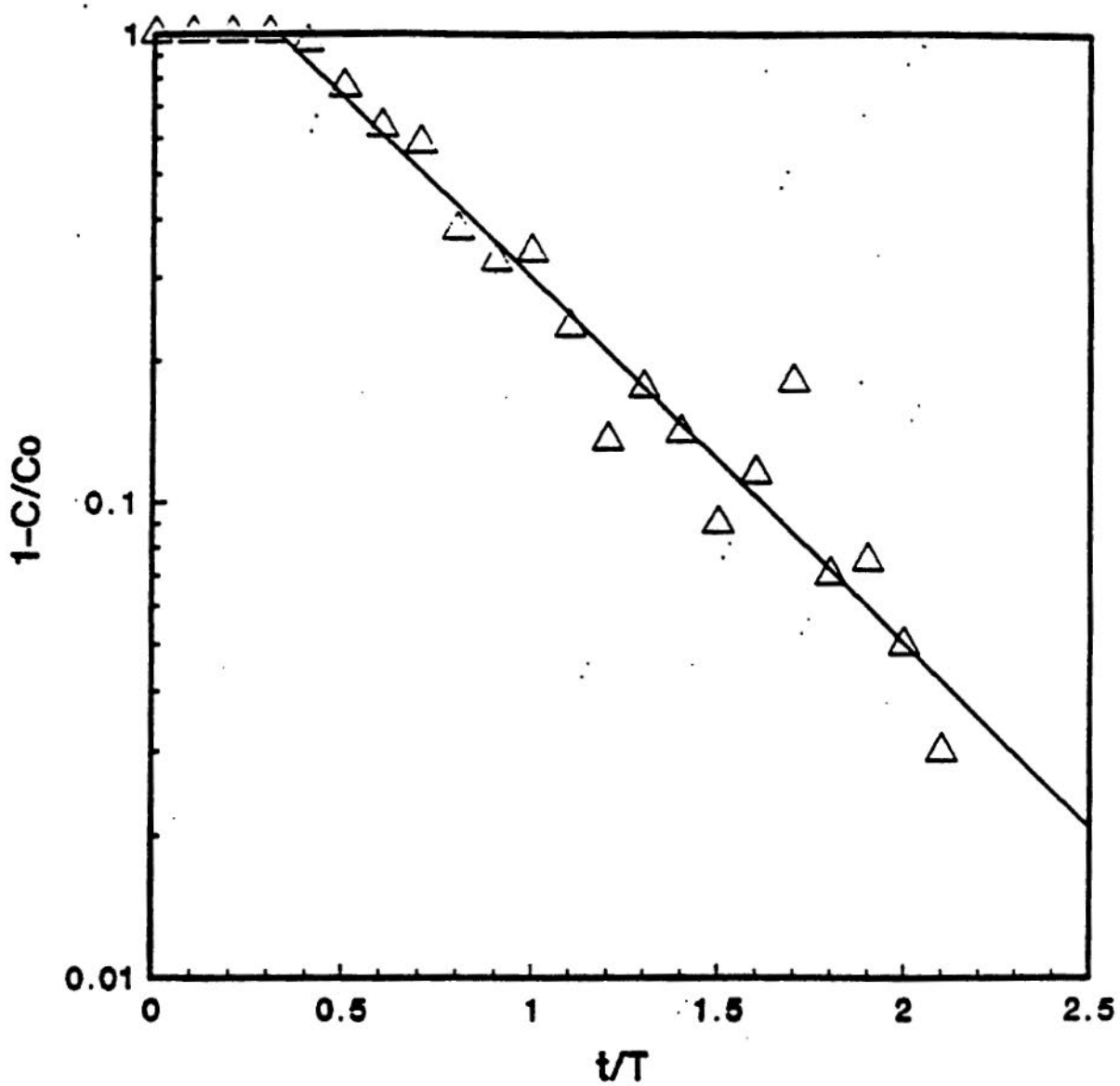

Slope, m = -0.774
Intercept, b = 0.251

Correlation Coefficient = 0.93

- The concentration of the instantaneous fluoride dose is determined by dividing this mass by the dosing volume, 4 liters:

$$\text{Fluoride concentration} = \frac{434\ g}{4\ L} = 109\ g/L$$

Fluoride levels in the exit to the clearwell were monitored and recorded every 3 minutes. The raw slug-dose tracer test data are shown in Table C-3.

The first step in evaluating the data for different times is to subtract the baseline fluoride concentration, 0.2 mg/L, from the measured concentration at each sampling interval (Table C-3). This is the same as the first step used to evaluate step-dose method data and gives the fluoride concentrations resulting from the tracer addition alone, shown in the third column of Table C-3. As indicated, the fluoride concentration rises from 0 mg/L at t = 0 minutes to the peak concentration of 3.6 mg/L at t = 18 minutes. The exiting fluoride concentration gradually recedes to near zero at t = 63 minutes. It should be noted that a maximum fluoride concentration of 2.2 mg/L is based on assuming complete mixing of the tracer added throughout the total clearwell volume. However, as shown in Table C-3, the fluoride concentrations in the clearwell effluent exceeded 2.2 mg/L for about 6 minutes between 14 and 20 minutes. These higher peak concentrations are caused by the dispersion of tracer throughout only a portion of the total clearwell volume. If a lower tracer concentration is needed in the effluent because of local or federal regulations, the mass to be added should be decreased accordingly.

The dimensionless concentrations in the fourth column of Table C-3 were obtained by dividing the tracer concentrations in the third column by the clearwell's theoretical concentration, Co = 2.2 mg/L. These dimensionless concentrations were then plotted as a function of time, as is shown by the slug-dose data on Figure C-3. These data points were connected by straight lines, resulting in a somewhat jagged curve.

The next step in evaluating slug-dose data is to determine the total area under the slug-dose data curve on Figure C-3. Two methods exist for finding this area -- graphical and numerical. The graphical method is

TABLE C-3

CLEARWELL DATA -- SLUG-DOSE TRACER TEST[1,2,3]

t, minutes	Fluoride Concentration		
	Measured, mg/L	Tracer, mg/L	Dimensionless, C/Co
0	0.2	0	0
3	0.2	0	0
6	0.2	0	0
9	0.2	0	0
12	1.2	1	0.45
15	3.6	3.4	1.55
18	3.8	3.6	1.64
21	2.0	1.8	0.82
24	2.1	1.9	0.86
27	1.4	1.2	0.55
30	1.3	1.1	0.50
33	1.5	1.3	0.59
36	1.0	0.8	0.36
39	0.6	0.4	0.18
42	1.0	0.8	0.36
45	0.6	0.4	0.18
48	0.8	0.6	0.27
51	0.6	0.4	0.18
54	0.4	0.2	0.09
57	0.5	0.3	0.14
60	0.6	0.4	0.18
63	0.4	0.2	0.09

Notes:

1. Measured conc. = Tracer conc. + Baseline conc.
2. Baseline conc. = 0.2 mg/L, fluoride dose = 109 g/L, theoretical conc. = 2.2 mg/L
3. Tracer conc. = Measured conc. - Baseline conc.

FIGURE C-3

C/Co vs. Time

Conversion of Slug-to Step-Dose Data

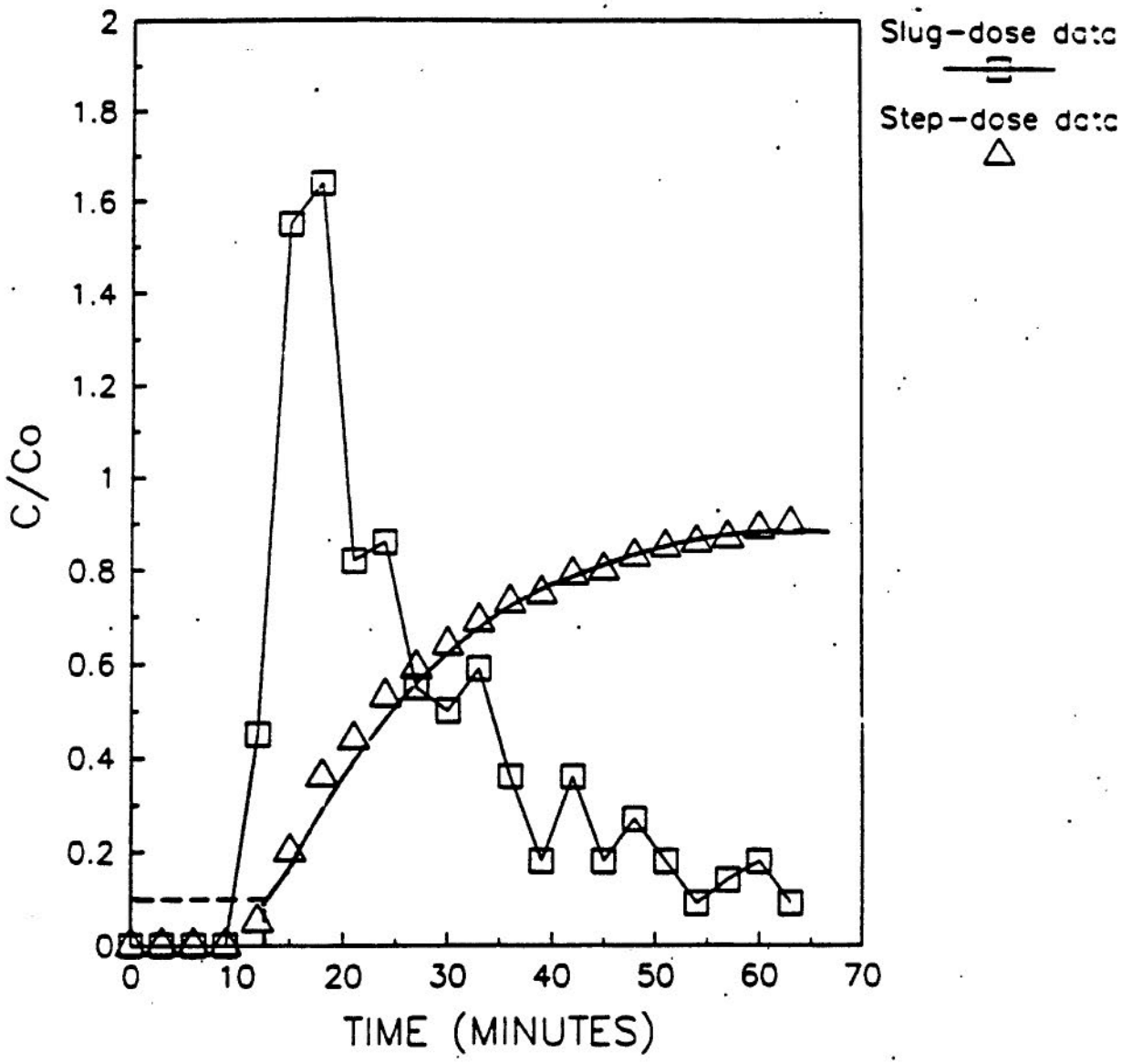

based on a physical measurement of the area using a planimeter. This involves calibration of the instrument to define the units conversion and tracing the outline of the curve to determine the area. The results of performing this procedure may vary depending on instrument accuracy and measurement technique. Therefore, only an illustration of the numerical technique for finding the area under the slug-dose curve will be presented for this example.

The area obtained by either the graphical or numerical method would be similar. Furthermore, once the area is found, the remaining steps involved with converting the data to the step-dose response are the same.

Table C-4 summarizes the results of determining the total area using a numerical integration technique called the rectangle rule. The first and second columns in Table C-4 are the sampling time and fluoride concentration resulting from tracer addition alone, respectively. The steps in applying these data are as follows. First, the sampling time interval, 3 minutes, is multiplied by the fluoride concentration at the end of the 3-minute interval to give the incremental area, in units of milligram minutes per liter. For example, at elapsed time, t = 39 minutes, the incremental area is obtained as follows:

Incremental area = sampling time interval x fluoride conc.
= (39-36) minutes x 0.4 mg/L
= 1.2 mg-min/L

This calculation was repeated at each time interval to obtain the data shown in the third column of Table C-4.

If the data had been obtained at unequal sampling intervals, then the incremental area for each interval would be obtained by multiplying the fluoride concentration at the end of each interval by the time duration of the interval. This convention also requires that the incremental area be zero at the first sampling point, regardless of the fluoride concentration at that time.

As is shown in Table C-4, all incremental areas were summed to obtain 59.4 mg-min/L, the total area under the slug-dose tracer test curve. This number represents the total mass of fluoride that was

detected during the course of the tracer test divided by the average flow rate through the clearwell.

To complete the conversion of slug-dose data to its equivalent step-dose response requires two additional steps. The first involves summing, consecutively, the incremental areas in the third column of Table C-4 to obtain the cumulative area at the end of each sampling interval. For example, the cumulative area at time, t = 27 minutes is found as follows:

$$\text{Cumulative area} = 0 + 0 + 0 + 0 + 3 + 10.2 + 10.8 + 5.4 + 5.7 + 3.6$$
$$= 38.7 \text{ mg-min/L}$$

The cumulative areas for each interval are recorded in the fourth column of Table C-4.

The final step in converting slug-dose data involves dividing the cumulative area at each interval by the total mass applied. Total area based on applied mass is calculated as follows:

$$\text{Total area mass applied/average flow} = 434 \text{ g} \times 1000 \frac{\text{mg}}{\text{g}} / 6{,}570 \frac{\text{L}}{\text{min}}$$
$$= 66.1 \frac{\text{mg-min}}{\text{L}}$$

For time = 39 minutes, the resulting step-dose data point is calculated as follows:

$$C/Co = 49.5 \text{ mg-min/L} \;/\; 59.4 \text{ mg-min/L}$$
$$= 0.83$$

The result of performing this operation at each sampling interval is the equivalent step-dose data. These data points are shown in the fifth column of Table C-4 and are also plotted on Figure C-3 to facilitate a graphical determination of T_{10}. A smooth curve was fitted to the step-dose data as shown on the figure.

T_{10} can be determined by the methods illustrated previously in this example for evaluating step-dose tracer test data. The graphical method illustrated on Figure C-3 results in a reading of T_{10} = 15 minutes.

TABLE C-4

EVALUATION OF SLUG-DOSE DATA

t, minutes	Fluoride, mg/L	Incremental Area, mg-min/L	Cumulative Area, mg-min/L	Equivalent Step-Dose Data
0	0	0	0	0
3	0	0	0	0
6	0	0	0	0
9	0	0	0	0
12	1	3	3	0.05
15	3.4	10.2	13.2	0.22
18	3.6	10.8	24.0	0.40
21	1.8	5.4	29.4	0.49
24	1.9	5.7	35.1	0.59
27	1.2	3.6	38.7	0.65
30	1.1	3.3	42.0	0.71
33	1.3	3.9	45.9	0.77
36	0.8	2.4	48.3	0.81
39	0.4	1.2	49.5	0.83
42	0.8	2.4	51.9	0.87
45	0.4	1.2	53.1	0.89
48	0.6	1.8	54.9	0.92
51	0.4	1.2	56.1	0.94
54	0.2	0.6	56.7	0.95
57	0.3	0.9	57.6	0.97
60	0.4	1.2	58.8	0.99
63	0.2	+ 0.6	59.4	1.00

Total Area = 59.4

C.1.7.3 Additional Considerations

In addition to determining T_{10} for use in CT calculations, slug-dose tracer tests provide a more general measure of the basin's hydraulics in terms of the fraction of tracer recovery. This number is representative of short-circuiting and dead space in the unit resulting from poor baffling conditions and density currents induced by the tracer chemical. A low tracer recovery is generally indicative of inadequate hydraulics. However, inadequate sampling in which peaks in tracer passage are not measured will result in an under estimate of tracer recovery. The tracer recovery is calculated by dividing the mass of fluoride detected by the mass of fluoride dosed.

The dosed fluoride mass was calculated previously and was 434 grams. The mass of detected fluoride can be calculated by multiplying the total area under the slug-dose curve by the average flow, in appropriate units, at the time of the test. The average flow in the clearwell during the test was 2.5 mgd or 6,570 L/min. Therefore, the mass of fluoride tracer that was detected is calculated as follows:

$$\text{Detected fluoride mass} = \text{total area} \times \text{average flow}$$

$$= 59.4 \frac{\text{mg-min}}{\text{L}} \times \frac{1\ \text{g}}{1000\ \text{mg}} \times 6{,}570 \frac{\text{L}}{\text{min}}$$

$$= 390\ \text{g}$$

Tracer recovery is than calculated as follows:

$$\text{Fluoride recovery} = \text{detected mass/dosed mass} \times 100$$

$$= 390\ \text{g} / 434\ \text{g} \times 100$$

$$= 90\ \%$$

This is a typical tracer recovery percentage for a slug-dose test, based on the experiences of Hudson (1975) and Thirumurthi (1969).

C.1.8 Flow Dependency of T_{10}

For systems conducting tracer studies at four or more flows, the T_{10} detention time should be determined by the above procedures for each of the desired flows. The detention times should then be plotted versus flow. For the example presented in the previous section, tracer studies

were conducted at additional flows of 1.1, 4.2, and 5.6 MGD. The T_{10} values at the various flows were:

Flow	I_{10}
1.1	25
2.5	13
4.2	7
5.6	4

T_{10} data for these tracer studies were plotted as a function of the flow, Q, as shown on Figure C-4.

If only one tracer test is performed, the flow rate for the tracer study should be not less than 91 percent of the highest flow rate experienced for the section. The hydraulic profile to be used for calculating CT would then be generated by drawing a line through points obtained by multiplying the T_{10} at the tested flow rate by the ratio of the tracer study flow rate to each of several different flows in the desired flow range.

For the example presented in the previous section, the clearwell experiences a maximum flow at peak hourly conditions of 6.0 mgd. The highest tested flow rate was 5.6 mgd, or 93 percent of the maximum flow. Therefore, the detention time, T_{10} = 4 minutes, determined by the tracer test at a flow rate of 5.6 mgd may be used to provide a conservative estimate of T_{10} for all flow rates less than or equal to the maximum flow rate, 6.0 mgd. The line drawn through points found by multiplying T^{10} = 4 minutes by the ratio of 5.6 mgd to each of several flows less than 5.6 mgd is also shown on Figure C-4 for comparative purposes with the hydraulic profile obtained from performing four tracer studies at different flow rates.

C.2 Determination of T_{10} Without Conducting a Tracer Study

In some situations, conducting tracer studies for determining the disinfectant contact time, T_{10}, may be impractical or prohibitively expensive. The limitations may include a lack of funds, manpower or equipment necessary to conduct the study. For these cases, the Primacy Agency may allow the use of "rule of thumb" fractions representing the

FIGURE C-4

Detention Time vs. Flow

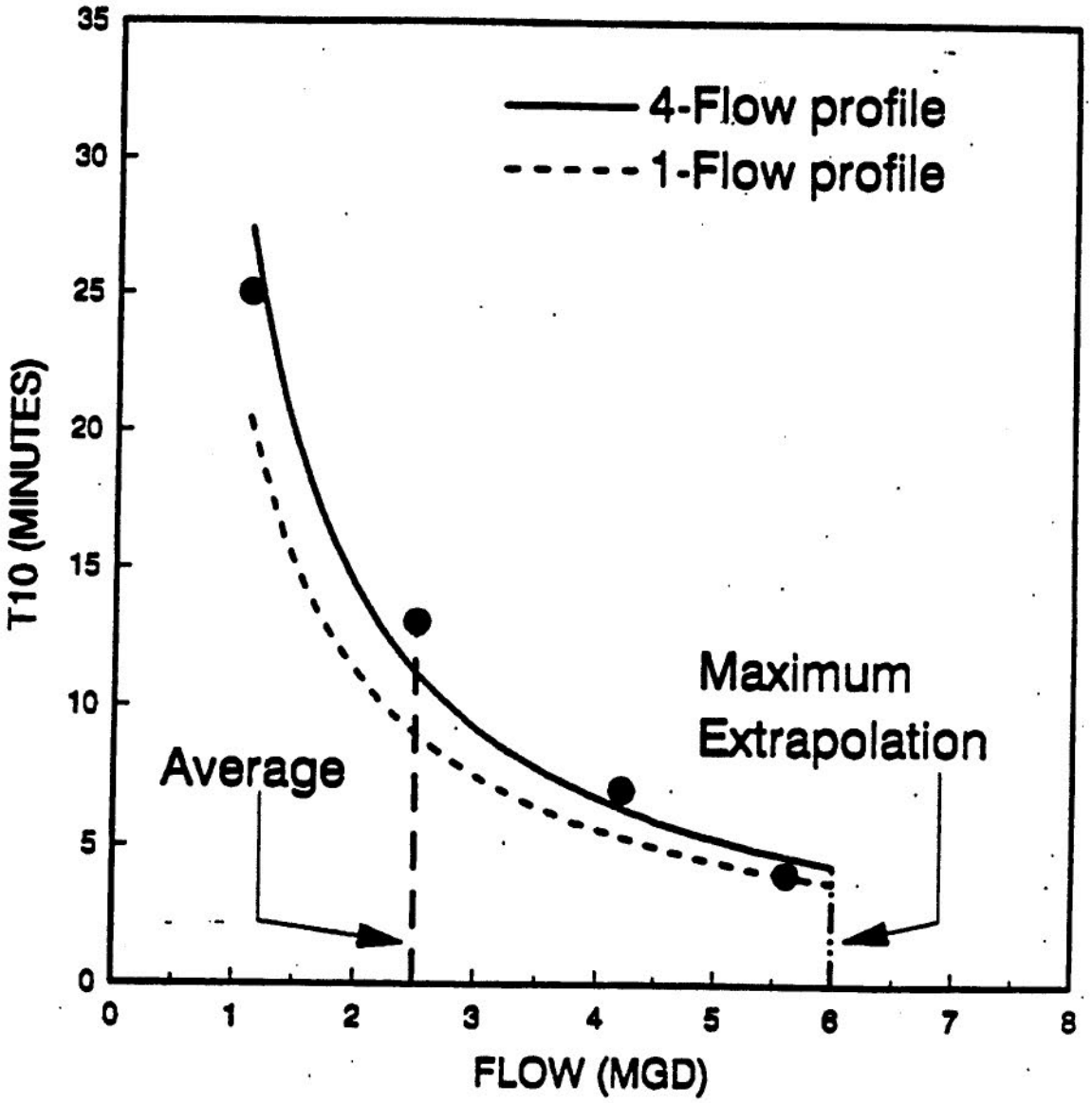

ratio of T_{10} to T, and the theoretical detention time, to determine the detention time, T_{10}, to be used for calculating CT values. This method for finding T_{10} involves multiplying the theoretical detention time by the rule of thumb fraction, T_{10}/T, that is representative of the particular basin configuration for which T_{10} is desired. These fractions provide rough estimates of the actual T_{10} and are recommended to be used only on a limited basis.

Tracer studies conducted by Marske and Boyle (1973) and Hudson (1975) on chlorine contact chambers and flocculators/settling basins, respectively, were used as a basis in determining representative T_{10}/T values for various basin configurations. Marske and Boyle (1973) performed tracer studies on 15 distinctly different types of full-scale chlorine contact chambers to evaluate design characteristics that affect the actual detention time. Hudson (1975) conducted 16 tracer tests on several flocculation and settling basins at six water treatment plants to identify the effect of flocculator baffling and settling basin inlet and outlet design characteristics on the actual detention time.

C.2.1 Impact of Design Characteristics

The significant design characteristics include: length-to-width ratio, the degree of baffling within the basins, and the effect of inlet baffling and outlet weir configuration. These physical characteristics of the contact basins affect their hydraulic efficiencies in terms of dead space, plug flow, and mixed flow proportions. The dead space zone of a basin is basin volume through which no flow occurs. The remaining volume where flow occurs is comprised of plug flow and mixed flow zones. The plug flow zone is the portion of the remaining volume in which no mixing occurs in the direction of flow. The mixed flow zone is characterized by complete mixing in the flow direction and is the complement to the plug flow zone. All of these zones were identified in the studies for each contact basin. Comparisons were then made between the basin configurations and the observed flow conditions and design characteristics.

The ratio T_{10}/T was calculated from the data presented in the studies and compared to its associated hydraulic flow characteristics. Both studies resulted in T_{10}/T values which ranged from 0.3 to 0.7. The results

of the studies indicate how basin baffling conditions can influence the T_{10}/T ratio, particularly baffling at the inlet and outlet to the basin. As the basin baffling conditions improved, higher T_{10}/T values were observed, with the outlet conditions generally having a greater impact than the inlet conditions.

As discovered from the results of the tracer studies performed by Marske and Boyle (1973) and Hudson (1975), the effectiveness of baffling in achieving a high T_{10}/T fraction is more related to the geometry and baffling of the basin than the function of the basin. For this reason, T_{10}/T values may be defined for three levels of baffling conditions rather than for particular types of contact basins. General guidelines were developed relating the T_{10}/T values from these studies to the respective baffling characteristics. These guidelines can be used to determine the T_{10} values for specific basins.

C.2.2 Baffling Classifications

The purpose of baffling is to maximize utilization of basin volume, increase the plug flow zone in the basin, and minimize short circuiting. Some form of baffling at the inlet and outlet of the basins is used to evenly distribute flow across the basin. Additional baffling may be provided within the interior of the basin (intra-basin) in circumstances requiring a greater degree of flow distribution. Ideal baffling design reduces the inlet and outlet flow velocities, distributes the water as uniformly as practical over the cross section of the basin, minimizes mixing with the water already in the basin, and prevents entering water from short circuiting to the basin outlet as the result of wind or density current effects. Three general classifications of baffling conditions -- poor, average, and superior -- were developed to categorize the results of the tracer studies for use in determining T_{10} from the theoretical detention time of a specific basin. The T_{10}/T fractions associated with each degree of baffling are summarized in Table C-5. Factors representing the ratio between T_{10} and the theoretical detention time for plug flow in pipelines and flow in a completely mixed chamber have been included in Table C-5 for comparative purposes. However, in practice the theoretical T_{10}/T values of 1.0 for plug flow and 0.1 for mixed flow are seldom

TABLE C-5

BAFFLING CLASSIFICATIONS

Baffling Condition	I_{10}/T	Baffling Description
Unbaffled (mixed flow)	0.1	None, agitated basin, very low length to width ratio, high inlet and outlet flow velocities
Poor	0.3	Single or multiple unbaffled inlets and outlets, no intra-basin baffles
Average	0.5	Baffled inlet or outlet with some intra-basin baffles
Superior	0.7	Perforated inlet baffle, serpentine or perforated intra-basin baffles, outlet weir or perforated launders
Perfect (plug flow)	1.0	Very high length to width ratio (pipeline flow), perforated inlet, outlet, and intra-basin baffles

achieved because of the effect of dead space. Conversely, the T_{10}/T values shown for the intermediate baffling conditions already incorporate the effect of the dead space zone, as well as the plug flow zone, because they were derived empirically rather than from theory.

As indicated in Table C-5, poor baffling conditions consist of an unbaffled inlet and outlet with no intra-basin baffling. Average baffling conditions consist of intra-basin baffling and either a baffled inlet or outlet. Superior baffling conditions consist of at least a baffled inlet and outlet, and possibly some intra-basin baffling to redistribute the flow throughout the basin's cross-section.

The three basic types of basin inlet baffling configurations are: a target-baffled pipe inlet, an overflow weir entrance, and a baffled submerged orifice or port inlet. Typical intra-basin baffling structures include: diffuser (perforated) walls; launders; cross, longitudinal, or maze baffling to cause horizontal or vertical serpentine flow; and longitudinal divider walls, which prevent mixing by increasing the length-to-width ratio of the basin(s). Commonly used baffled outlet structures include free-discharging weirs, such as sharpcrested and V-notch, and submerged ports or weirs. Weirs that do not span the width of the contact basin, such as Cipolleti weirs, should not be considered baffling as their use may substantially increase weir overflow rates and the dead space zone of the basin.

C.2.3 Examples of Baffling

Examples of these levels of baffling conditions for rectangular and circular basins are explained and illustrated in the following section. Typical uses of various forms of baffled and unbaffled inlet and outlet structures are also illustrated.

The plan and section of a rectangular basin with poor baffling conditions, which can be attributed to the unbaffled inlet and outlet pipes, is illustrated on Figure C-5. The flow pattern shown in the plan view indicates straight-through flow with dead space occurring in the regions between the individual pipe inlets and outlets. The section view reveals additional dead space from a vertical perspective in the upper inlet and lower outlet corners of the contact basin. Vertical mixing also occurs as

bottom density currents induce a counter-clockwise flow in the upper water layers.

The inlet flow distribution is markedly improved by the addition of an inlet diffuser wall and intra-basin baffling as shown on Figure C-6. However, only average baffling conditions are achieved for the basin as a whole because of the inadequate outlet structure -- a Cipolleti weir. The width of the weir is short in comparison with the width of the basin. Consequently, dead space exists in the corners of the basin, as shown by the plan view. In addition, the small weir width causes a high weir overflow rate, which results in short circuiting in the center of the basin.

Superior baffling conditions are exemplified by the flow pattern and physical characteristics of the basin shown on Figure C-7. The inlet to the basin consists of submerged, target-baffled ports. This inlet design serves to reduce the velocity of the incoming water and distribute it uniformly throughout the basin's cross-section. The outlet structure is a sharpcrested weir which extends for the entire width of the contact basin. This type of outlet structure will reduce short circuiting and decrease the dead space fraction of the basin, although the overflow weir does create some dead space at the lower corners of the effluent end. These inlet and outlet structures are by themselves sufficient to attain superior baffling conditions; however, maze-type intra-basin baffling was included as an example of how this type of baffling aids in flow redistribution within a contact basin.

The plan and section of a circular basin with poor baffling conditions, which can be attributed to flow short circuiting from the center feed well directly to the effluent trough is shown on Figure C-8. Short circuiting occurs in spite of the outlet weir configuration because the center feed inlet is not baffled. The inlet flow distribution is improved somewhat on Figure C-9 by the addition of an annular ring baffle at the inlet which causes the inlet flow to be distributed throughout a greater portion of the basin's available volume. However, the baffling conditions in this contact basin are only average because the inlet center feed arrangement does not entirely prevent short circuiting through the upper levels of the basin.

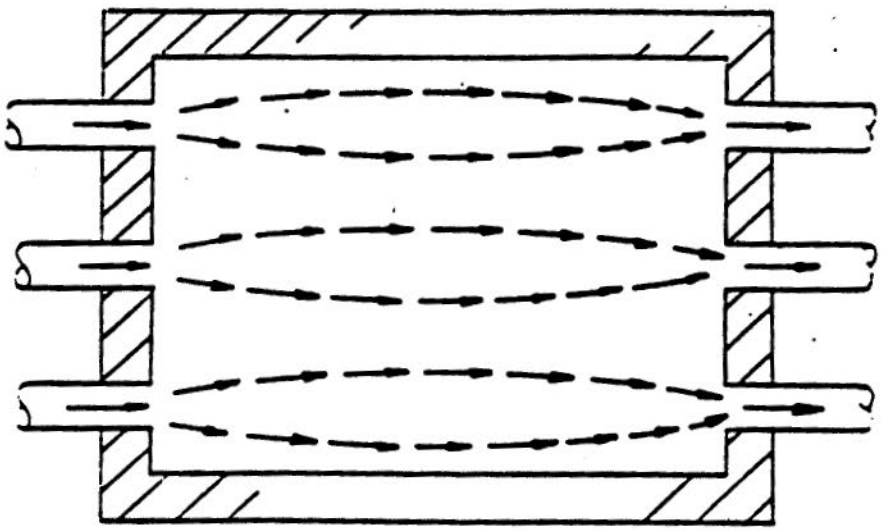

PLAN

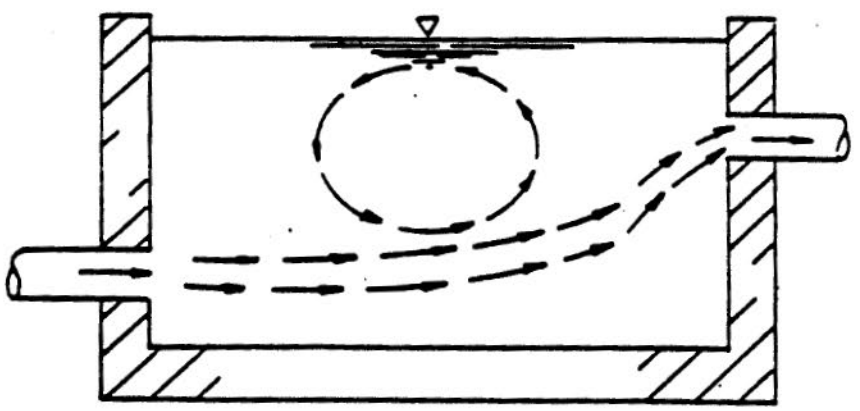

SECTION

FIGURE C-5 POOR BAFFLING CONDITIONS -- RECTANGULAR CONTACT BASIN

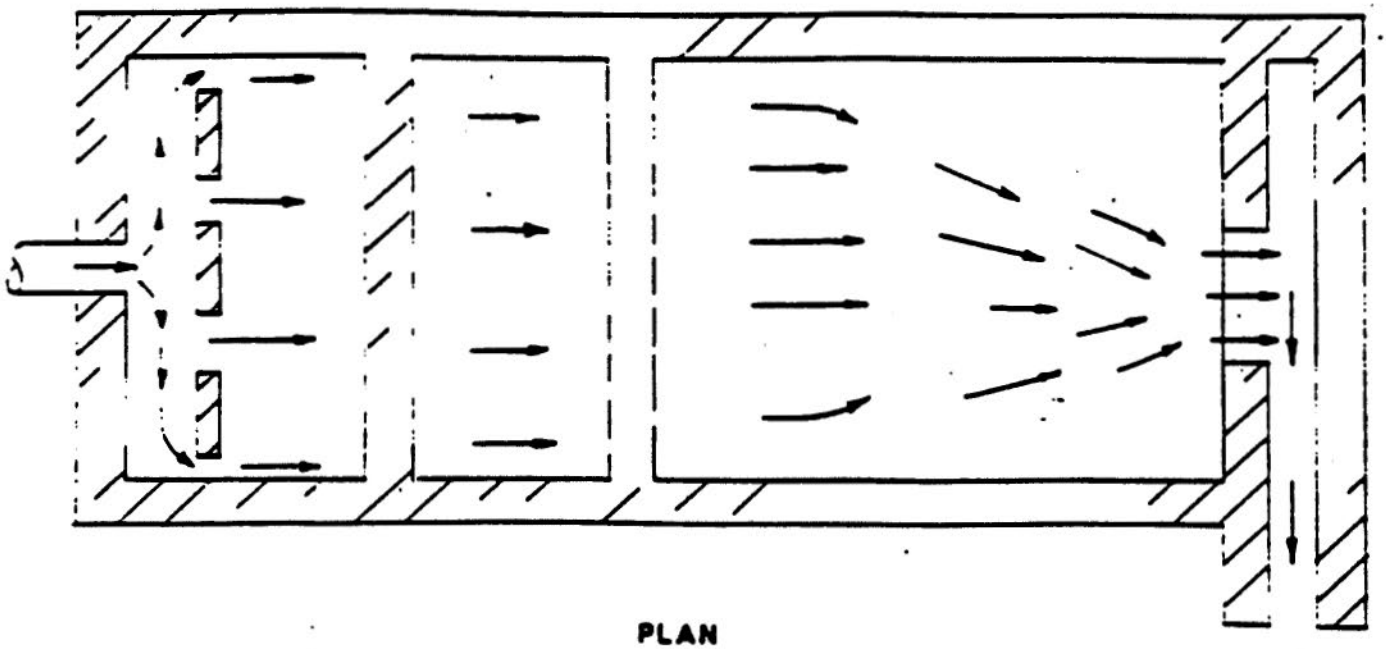

PLAN

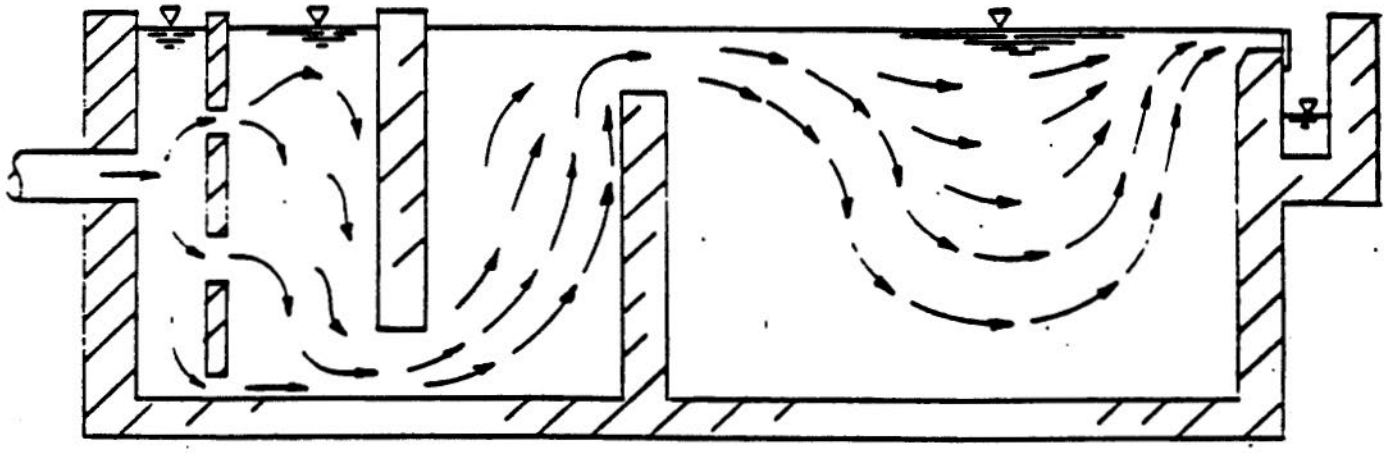

SECTION

FIGURE C-6 AVERAGE BAFFLING CONDITIONS -- RECTANGULAR CONTACT BASIN

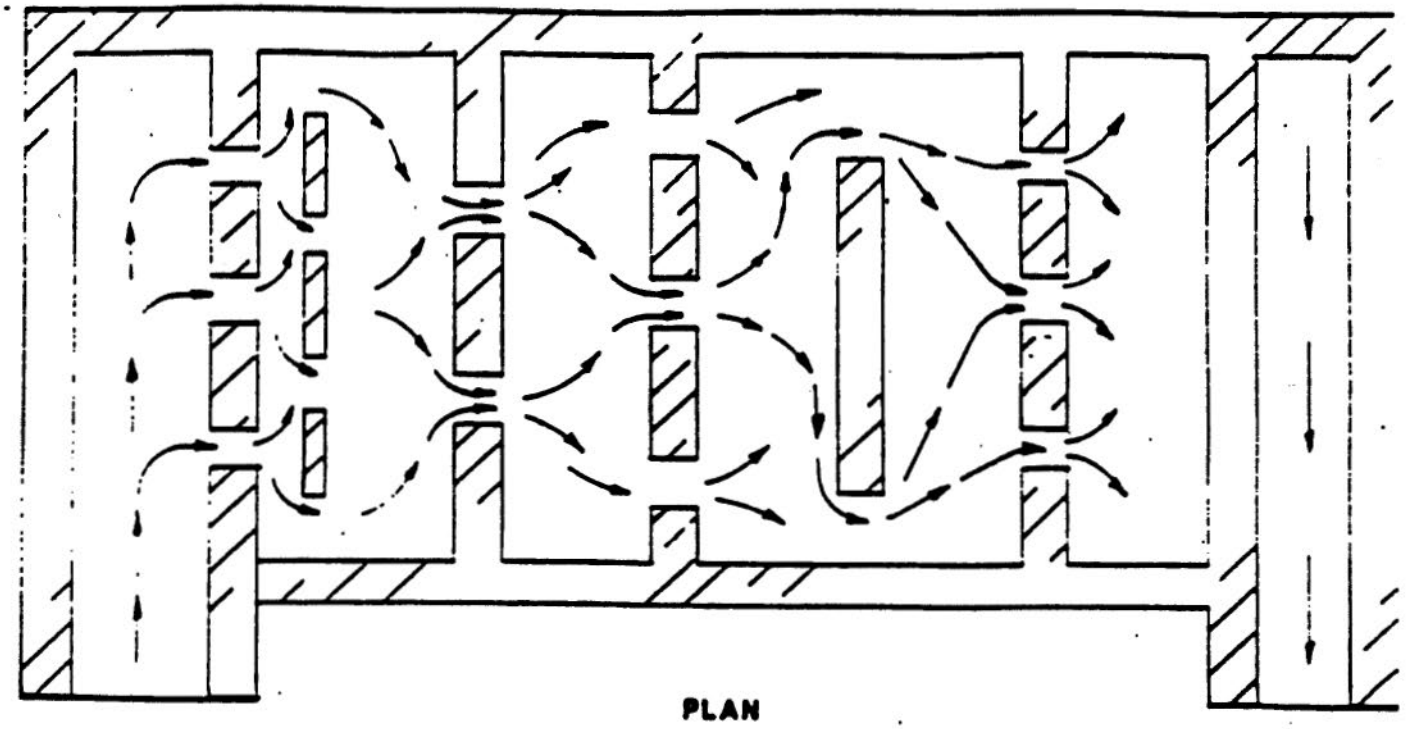

PLAN

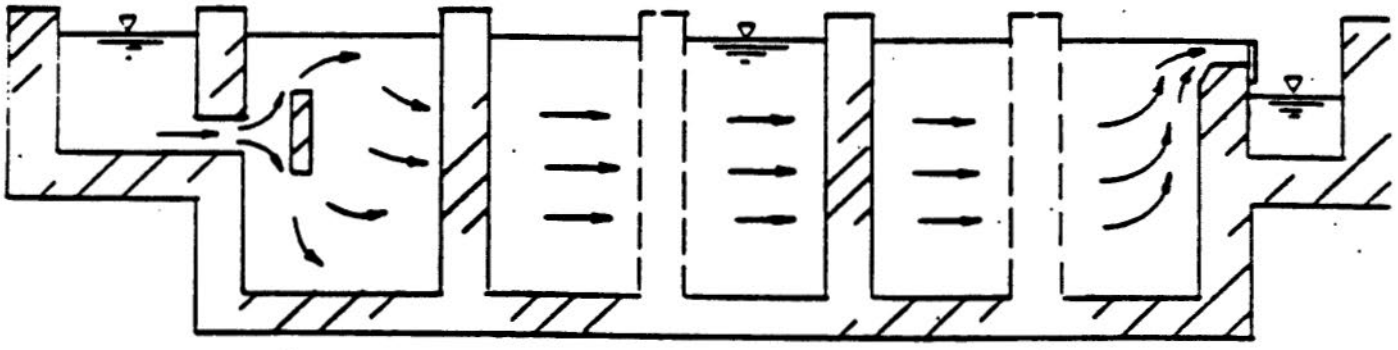

SECTION

FIGURE C-7 SUPERIOR BAFFLING CONDITIONS – RECTANGULAR CONTACT BASIN

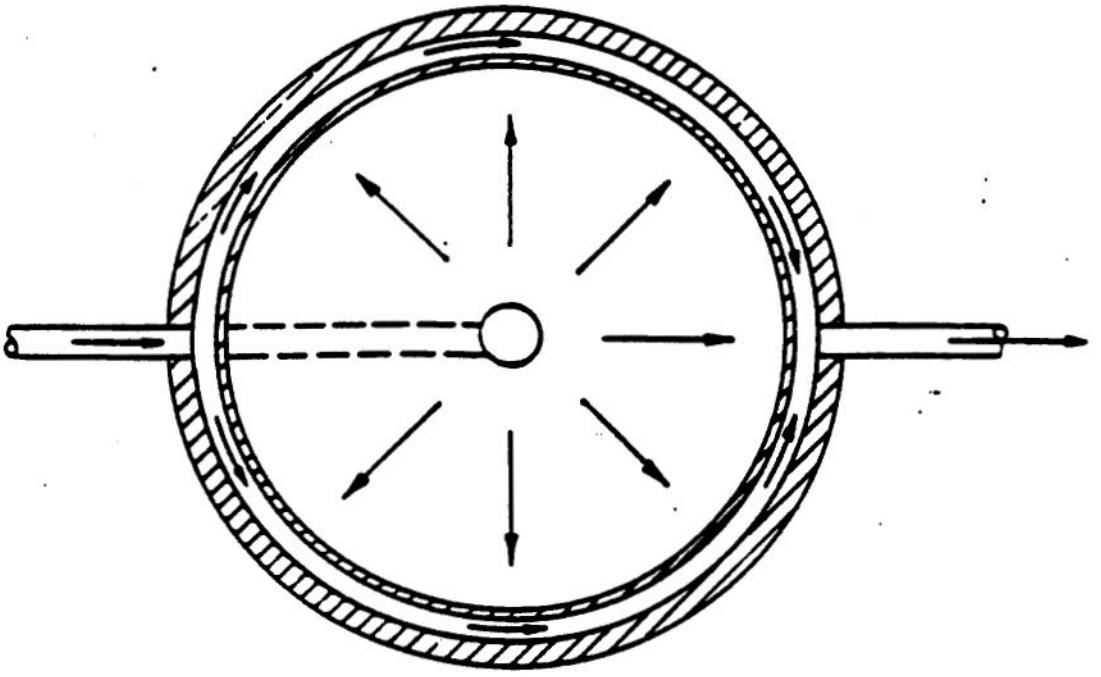

PLAN

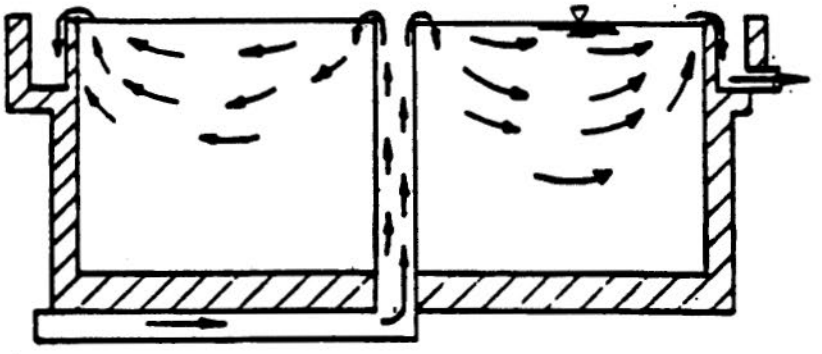

SECTION

FIGURE C-8 POOR BAFFLING CONDITIONS -- CIRCULAR CONTACT BASIN

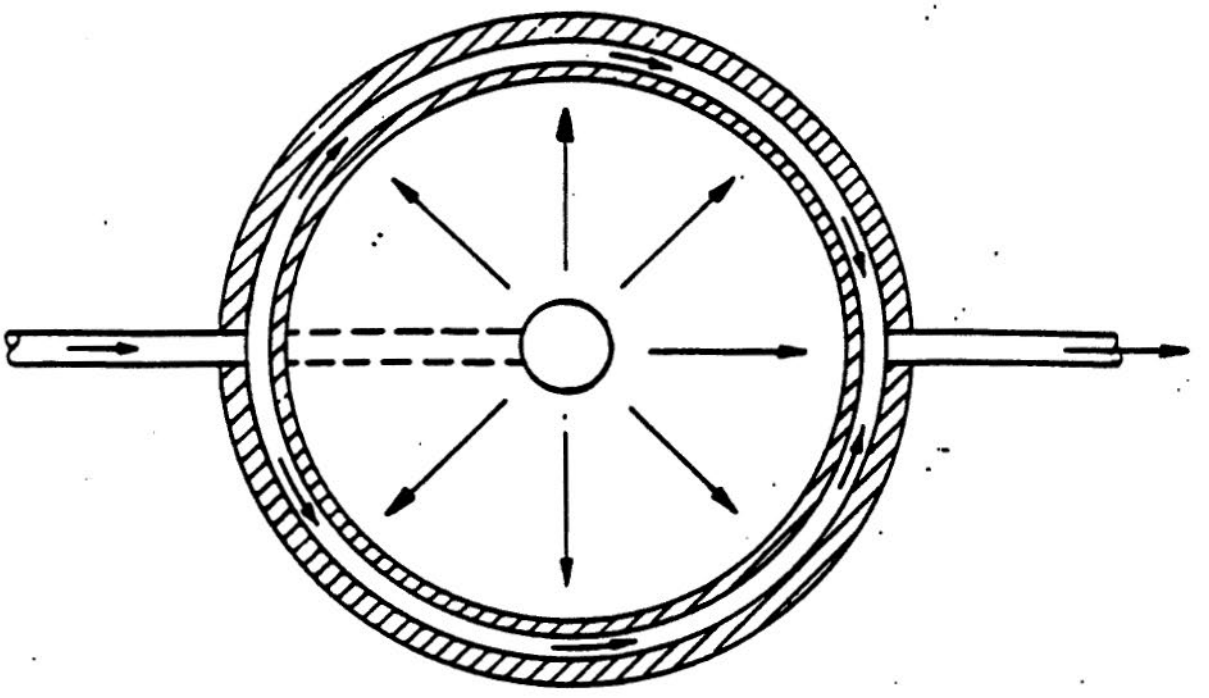

PLAN

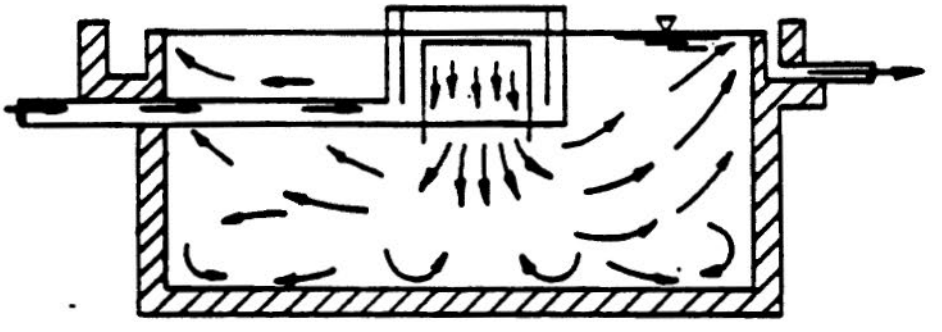

SECTION

FIGURE C-9 AVERAGE BAFFLING CONDITIONS - -
CIRCULAR CONTACT BASIN

Superior baffling conditions are attained in the basin configuration shown on Figure C-10 through the addition of a perforated inlet baffle and submerged orifice outlet ports. As indicated by the flow pattern, more of the basin's volume is utilized due to uniform flow distribution created by the perforated baffle. Short circuiting is also minimized because only a small portion of flow passes directly through the perforated baffle wall from the inlet to the outlet ports.

C.2.4 Additional Considerations

Flocculation basins and ozone contactors represent water treatment processes with slightly different characteristics from those presented in Figures C-5 through C-10 because of the additional effects of mechanical agitation and mixing from ozone addition, respectively. Studies by Hudson (1975) indicated that a single-compartment flocculator had a T_{10}/T value less than 0.3, corresponding to a dead space zone of about 20 percent and a very high mixed flow zone of greater than 90 percent. In this study, two four-compartment flocculators, one with and the other without mechanical agitation, exhibited T_{10}/T values in the range of 0.5 to 0.7. This observation indicates that not only will compartmentation result in higher T_{10}/T values through better flow distribution, but also that the effects of agitation intensity on T_{10}/T are reduced where sufficient baffling exists. Therefore, regardless of the extent of agitation, baffled flocculation basins with two or more compartments should be considered to possess average baffling conditions ($T_{10}/T = 0.5$), whereas unbaffled, single-compartment flocculation basins are characteristic of poor baffling conditions ($T_{10}/T = 0.3$).

Similarly, multiple stage ozone contactors are baffled contact basins which show characteristics of average baffling conditions. Single stage ozone contactors should be considered as being poorly baffled. However, circular, turbine ozone contactors may exhibit flow distribution characteristics which approach those of completely mixed basins, with a T_{10}/T of 0.1, as a result of the intense mixing.

In many cases, settling basins are directly connected to the flocculators. Data from Hudson (1975) indicates that poor baffling conditions at the flocculator/settling basin interface can result in

backmixing from the settling basin to the flocculator. Therefore, settling basins that have integrated flocculators without effective inlet baffling should be considered as poorly baffled, with a T_{10}/T of 0.3, regardless of the outlet conditions, unless intra-basin baffling is employed to redistribute flow. If intra-basin and outlet baffling is utilized, then the baffling conditions should be considered average with a T_{10}/T of 0.5.

Filters are special treatment units because their design and function is dependent on flow distribution that is completely uniform. Except for a small portion of flow which shortcircuits the filter media by channeling along the walls of the filter, filter media baffling provides a high percentage of flow uniformity and can be considered superior baffling conditions for the purpose of determining T_{10}. As such, the T_0 value can be obtained by subtracting the volume of the filter media, support gravel, and underdrains from the total volume and calculating the theoretical detention time by dividing this volume by the flow through the filter. The theoretical detention time is then multiplied by a factor of 0.7, corresponding to superior baffling conditions, to determine the T_{10} value.

C.2.5 Conclusions

The recommended T_{10}/T values and examples are presented as a guideline for use by the Primacy Agency in determining T_{10} values in site specific conditions and when tracer studies cannot be performed because of practical considerations. Selection of T_{10}/T values in the absence of tracer studies was restricted to a qualitative assessment based on currently available data for the relationship between basin baffling conditions and their associated T_{10}/T values. Conditions which are combinations or variations of the above examples may exist and warrant the use of intermediate T_{10}/T values such as 0.4 or 0.6. As more data on tracer studies become available, specifically correlations between other physical characteristics of basins and the flow distribution efficiency parameters, further refinements to the T_{10}/T fractions and definitions of baffling conditions may be appropriate.

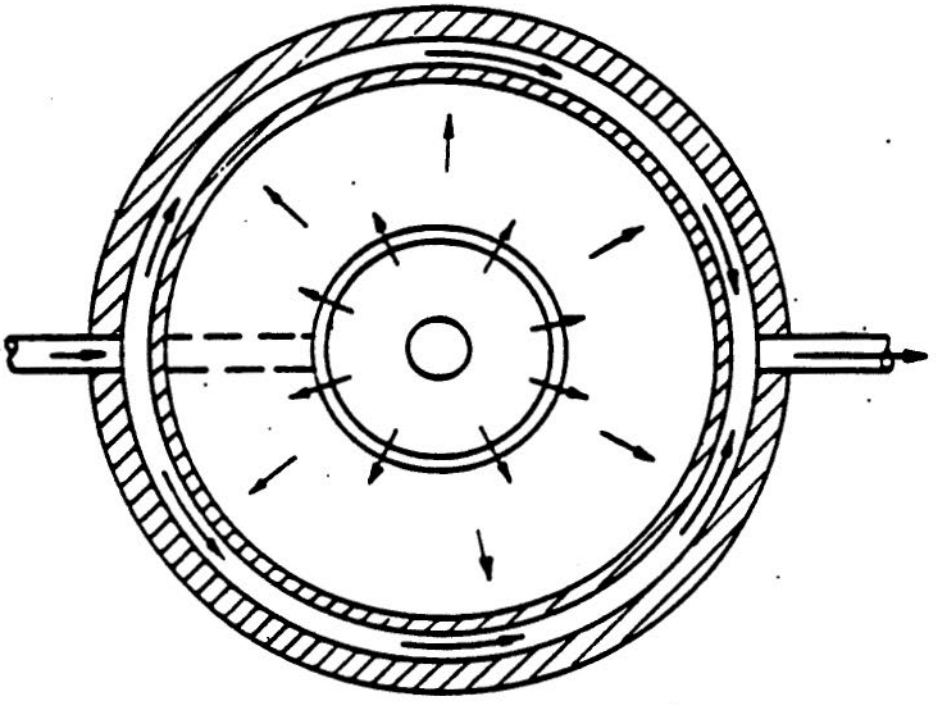

PLAN

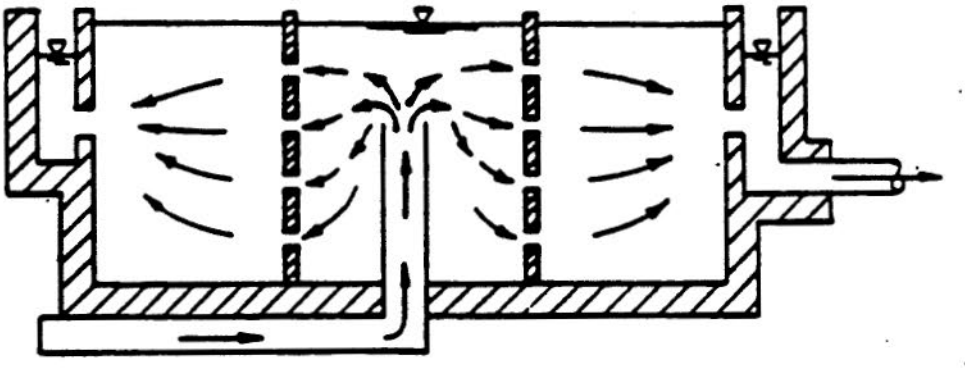

SECTION

FIGURE C-10 SUPERIOR BAFFLING CONDITIONS - - CIRCULAR CONTACT BASIN

References

Hudson, H. E., Jr.. "Residence Times in Pretreatment", J. AWWA, pp. 45-52, January, 1975.

Hudson, H. E., Jr.. Water Clarification Processes: Practical Design and Evaluation, Van Nostrand Reinhold Company, New York, 1981.

Levenspiel, O.. Chemical Reaction Engineering, John Wiley & Sons, New York, 1972.

Marske, D. M. and Boyle, J. D.. "Chlorine Contact Chamber Design - A Field Evaluation", Water and Sewage Works, pp. 70-77, January, 1973.

Thirumurthi, D.. "A Break-through in the Tracer Studies of Sedimentation Tanks", J. WPCF, pp. R405-R418, November, 1969.

APPENDIX C:

CONCENTRATING, PROCESSING, DETECTING AND IDENTIFYING GIARDIA CYSTS IN WATER

The following pages contain background information supporting Jay Vasconcelos' talk, "Methods of Testing for Giardia in Water." Please see the summary of this talk (pp. 14 through 16) for further information, and for an outline of the modified EPA Consensus Method.

APPENDIX C : CONCENTRATING, PROCESSING
DETECTING AND IDENTIFYING GIARDIA CYSTS IN WATER

METHOD	INVESTIGATOR (S)	RESULTS
1. Membrane Filtration		
Cellulosic (47mm-0.45µm)	Chang and Kabler USPHS, 1956	Generally unsuccessful
Polycarbinate (293mm-5µm)	Pyper, DuFrain and Henry Eng 1982, (unpublished)	Passing 1 gal/min at 10-PSI. 15-1800 gal total
2. Particulate Filtration (diatomaceous earth, sand, etc.)	Shaw et al, 1977 Juranek, 1979	Generally good removal but poor eluation
3. Algae (Foerst) Centrifuge	Holman et al, 1983 DHHS, Washington	Good rapid recovery, but limited in field use
4. Anionic and Cationic Exchange Resins	Brewer, Wright State UN. (unpublished)	Generally unsuccessful
5. Epoxy-Fiberglass Balston Tube Filters (10"-8µm)	Riggs, CDHS Lab, Berkley, CA (unpublished)	Overall recovery 20-80 percent
6. Microporous Yarnwoven Depth. Filters (7 and 1µm orlon and polyprolylene)	Jakubowski, Erickson, 1979 and 1980, EPA-Cincinnati	Recovery 3-15 percent Extraction ave. 58 percent
7. Pellican Cassette System	Millipore Corp. (unpublished)	May be useful for processing filter washings
8. Filterwashing Apparatus	DuWalle, U. of Wash., 1982 (unpublished)	Claims 75 percent recovery from orlon filters

TABLE 1

APPENDIX C: CONCENTRATING, PROCESSING, DETECTING AND IDENTIFYING GIARDIA CYSTS IN WATER

PRIMARY CONCENTRATION AND PROCESSING METHODS

1. MEMBRANE FILTER (MF) METHODS

   a. Cellulosic (mixed esters of cellulose)

      1. Chang and Kabler in 1955
         First to use MF for cyst recovery. Recovered 20-42 percent at cyst concentration of 3, 5, and 10 cyst/gal. - no cyst found at 1 cyst/gal.

      2. Method was used in 1965 Colorado outbreak (Moore, et al, 1969) using 2 liter size water samples from 10 sites. No cysts were detected. Use of cellulosic filters have generally not been successful in demonstrating cysts in drinking water.

   b. Polycarbonate (PC) Filters

      1. Luchtel and Colleages in 1980 used 293 mm, 5.0 um pore size nucleopore (PC) filters to concentrate formalin-fixed. G. lamblia cysts from 20 L tap water samples. Recovery rates of approximately 75 percent were reported.

      2. Pyper of DuFrain and Henry Engineers claim good recovery with same nucleopore filter at a flow rate of 1 gal./min., not over 10 PSI, passing 15-1800 gal. in just over 24 hours.

   c. Even with these claims by Pyper and Luchtel, the MF Method has only once (Aspen, 1965) been successful in demonstrating cysts in water--probably because:

      1. Inability to process a sufficient volume.

      2. Inability to remove cysts from filter.

      3. Cysts weren't present at time of sampling during or after outbreak.

2. PARTICULATE FILTRATION

   a. SAND - CDC (Shaw, 1977) used high-vol filtration through swimming pool sand filter (280,000 gal. total over 10 days) - was backflushed into 55 gal. drums and coagulated w/alum. Concentration fed to beagle puppies and after treatment (cheesecloth to wire screening to 30 um MF to centrifuge) was examined microscopically. First time cysts observed in water supply after concentration.

   b. Diatomaceous earth (DE) - CDC (Juranek, 1979) used DE to remove cysts from seeded water. Problem was that cysts couldn't be removed from DE particles. Brewer (1983) claims 5.2-31.1 percent recovery from DE backwash. Retention through 3 forms (celite 505, HyFlo-Supercel and celite 560) at cyst concentration ranging from 6-15,000 cyst/L. Recovery range between 66-100 percent.

3. ALGAE CENTRIFUGE

a. Was found to recover more cysts (10X) than a series of MF-filters and nylon screens: 5 vs. 1 day by MF.

b. May be impractical in field because of power requirement.

c. If used in lab, 1 large single sample collected in the field could miss cyst.

d. May find application for concentration cysts from orlon filter washings.

4. ANIONIC AND CATIONIC EXCHANGE RESINS (Brewer - unpublished)

a. Based on hypothesis that cysts could be attracted to charged surfaces, cysts have a charge of approximately 25mV at pH 5.5 which increases in electro-negativity as the pH rises to 8.0.

b. Charge attraction techniques have been used for concentration of both bacteria and viruses in water.

c. Five exchange resins were tested:
(1. 40 percent recovery from anionic Dowex 1-XY columns
(2. 38 percent recovery from cationic Dowex 50W-X8 columns

d. Compared to parallel tests w/diatomaceous earth, exchange resins less efficient in retention.

5. BALSTON EPOXY-FIBERGLASS TUBE FILTERS

a. Riggs of CSHD, Viral and Rick. Lab., can filter 500 gallons drinking water thru 10" - 8 µm Balston tube filter.

b. Backflushes w/1 L 3 percent beef extract or solution of 0.5 percent potassium citrate.

c. Concentration is centrifuged w/40 percent potassium citrate and middle layer filtered thru 5 µ polycarbonate filters.

d. Uses direct immunofluorescence antibody technique for detection and identification.

e. Claims 20-80 percent efficiency in collection, preprocessing and ID.

6. MICROPOROUS YARNWOVEN DEPTH FILTERS

a. In 1976 EPA developed a concentration-extraction method involving large volumes of water thru microporous yarnwoven orlon-fiber filters.

b. This method has been tenatively adopted as the "method of choice" for concentrating cysts from water supplies.

c. Since initial studies which showed only 3-15 percent recovery with a mean of 6.3 percent and a 58 percent extraction rate, several changes have been made which may have increased the retention rate to >20 percent.

1. Gone from 7 to 1 µm porsity filter
2. Limited the rate of flow to 1/2 gallon/min
3. Limited the pressure head to 10 PSI
4. Have gone to polyproylene filters in lieu of orlon

d. It was the first method successfully used to detect cysts in the distribution system of a community water supply.

e. Is the recommended filter to be used by the EPA consensus method.

7. PELLICAN CASSETTE SYSTEM

a. Is a plate and frame style holder which accepts both ultra thin and depth type filters.

b. Has from 0.5 to 25 ft^2 of filter area.

c. Has not been investigated thoroughly but has had some success in virus concentration.

d. Its main application for cyst recovery may lay with the processing of filter washings.

8. FILTERWASHING APPARATUS

a. This is a proposed device by DuWalle, 1982 from U. of W., for unwinding the fibers from the filter cartridge while repeatedly brushing and squeezing them while in a bath solution.

b. Bath could contain either a surfactant or pH controlled solution.

c. Potential claims are as high as 75 percent extraction of cysts from the fibers.

TABLE 2: DETECTION METHODS

METHOD	INVESTIGATOR(S)	RESULTS
1. Immunofluorescence		
a. DFA	Riggs, CSDHS Lab, Berkley, CA 1983	Good prep., Cross Rx
b. IFA	Sauch, EPA-Cincinnati Riggs, CSDS	Still under study
c. Monoclonal Antibodies	Riggs, CSDHS Sauch, EPA-Cincinnati (unpublished)	Still under study
2. ELISA Method	Hungar, J. Hopkins MD, 1983	Feces samples only
3. Brightfield/Phase Contrast	EPA Consensus method	Ongoing

APPENDIX C: CONCENTRATING, PROCESSING, DETECTING AND IDENTIFYING GIARDIA CYSTS IN WATER

DETECTION METHODS

1.a. DIRECT FLUORESCENT ANTIBODY (DRA) TECHNIQUE

1. Riggs has produced a high titer purified immune sera to Giardia lamblia cysts in guinea pigs and labeled it with Fluorecein isothio cyanate. Sera is purified thru NH_4OH and DEAE sefadex fractionation.

2. Obtained cross reactions with Chilomastix mesnili cysts but claims it can be easily distinguished from Giardia by its smaller size..

1.b. INDIRECT FLUORESCENT ANTIBODY (IFA) TECHNIQUE

1. Sauch using IFA with immune sera from rabbits (unpurified). It is reacted with commercially available fluorescent-labeled goat anti-rabbit gamma globulin.

2. Some cross-reactions with certain algal cells.

1.c. MONOCLONAL ANTIBODIES

1. Using clones of hybridoma cell lines obtained by fusing mouse myeloma cells with spleen cells from mice (BALB/c) immunized with G. lamblia trophozoites.

2. Produced eight monoclonal antibodies evaluated by IFA against both trophs and cysts.
   a. 3/8 stained the ventral disk
   b. 2 stained the nuclei
   c. 2 stained cytoplasmic granules
   d. 2 stained membrane components

3. Variability in staining may be due to differences in stages of encystment.

4. Preliminary results indicate nonoclonal ABs may give rapid and specific ID of cysts.

5. Rx may be too specific, not reacting with all human forms of G. lamblia may have to go to polyclonal ABs.

2. ELISA METHOD

a. Hungar at John Hopkins (unpublished) has produced a detection method by ELISA using a intact "sandwich" technique in 96-well microtiter plates.

b. Using antisera from 2 different animals (may present problem).

c. Need a minimum of 12 cysts/well for color Rx.

APPENDIX D

ANALYTICAL REQUIREMENTS OF THE SWTR AND A SURVEY OF THE CURRENT STATUS OF RESIDUAL DISINFECTANT MEASUREMENT METHODS FOR ALL CHLORINE SPECIES AND OZONE

APPENDIX D
ANALYTICAL REQUIREMENTS

Only the analytical method(s) specified in the SWTR, or otherwise approved by EPA, may be used to demonstrate compliance with the requirements of the SWTR. Measurements of pH, temperature, turbidity, and residual disinfectant concentrations must be conducted by a party approved by the Primacy Agency. Measurements for total coliforms, fecal coliforms, and heterotrophic bacteria as measured by the heterotrophic plate count (HPC), must be conducted by a laboratory certified by the Primacy Agency or EPA to do such analysis. Until laboratory certification criteria are developed for the analysis of HPC and fecal coliforms, any laboratory certified for total coliform analysis is acceptable for HPC and fecal coliform analysis. The test methods to be used for various analyses are listed below:

(1) Fecal coliform concentration - Method 908C (MPN Procedure), 908D (Estimation of Bacterial Density), or 909C (Membrane Filter Procedure) as set forth in Standard Methods for the Examination of Water and Wastewater, American Public Health Association, 16th edition.

(2) Total coliform concentration - Methods 908A, B, D (MPN Procedure) or 909A, B (Membrane Filter Procedure) as set forth in Standard Methods for the Examination of Water and Wastewater, American Public Health Association, 16th edition; Autoanalysis Colilert (EPA refers to this as Minimal Medium ONPG-MUG Method), as set forth in Applied and Environmental Microbiology, American Society for Microbiology, Volume 54, No. 6, June 1988. pp. 1595-1601.

(3) Heterotorphic Plate Count - Method 907A (Pour Plate Method), as set forth in Standard Methods for the Examination of Water and Wastewater, American Public Health Association, 16th edition.

(4) Turbidity - Method 214A (Nephelometric Method) as set forth in Standard Methods for the Examination of Water and Wastewater, American Public Health Association, 16th edition.

(5) Residual disinfectant concentration - Residual disinfectant concentrations for free chlorine and combined chlorine must be measured by Method 408C (Amperometric Titration Method), Method 408D (DPD Ferrous Titrimetric Method), Method 408E (DPD Colormetric Method), or Method 408F (Leuco Crystal Violet

Method) as set forth in Standard Methods for the Examination of Water and Wastewater, American Public Health Association, 16th edition. Disinfectant residuals for free chlorine and combined chlorine may also be measured by using DPD colorimetric test kits if approved by the Primacy Agency. Disinfectant residuals for ozone must be measured by the Indigo Trisulfonate Method (Bader, H., Hoigne, J., "Determination of Ozone in Water by the Indigo Method; A Submitted Standard Method;" Ozone Science and Engineering, Vol. 4, pp. 169-176, Pergamon Press Ltd., 1982), or automated methods which are calibrated in reference to the results obtained by the Indigo Trisulfonate Method, on a regular basis, as determined by the Primacy Agency. This method is described in section of the manual. (Note: This method is included in the 17th edition of Standard Methods for the Examination of Water and Wastewater, American Public Health Association; the Idiodometric Method in the 16th edition may not be used.) Disinfectant residuals for chlorine dioxide must be measured by Method 410B (Amperometric Method) or Method 410C (DPD Method) as set forth in Standard Methods for the Examination of Water and Wastewater, American Public Health Association, 16th edition.

(6) Temperature - Method 212 as set forth in Standard Methods for the Examination of Water and Wastewater, American Public Health Association, 16th edition.

(7) pH - Method 423 as set forth in Standard Methods for the Examination of Water and Wastewater, American Public Health Association, 16th edition.

References

Edberg et al, "National Field Evaluation of a Defined Substrate Method for the Simultaneous Enumeration of Total Coliforms and Escherichia Coli from Drinking Water: Comparison with the Standard Multiple Tube Fermentation Method," Applied and Environmental Microbiology, Volume 54, pp. 1595-1601, June 1988.

PREFACE

The AWWA paper entitled "A survey of the current status of residual disinfectant measurement method for all chlorine species and ozone" will be included in the final document. It has not been included here for the sake of brevity. However, the publication is available from the AWWA Customer Services Department, 6666 W. Quincy Avenue, Denver, Co. 80235; Telephone (303) 794-7711. The document publication number is 90529.

The above publication summarizes the AWWA Research foundation's 816 page publication entitled " Disinfectant Residual Measurement Methods", publication number 90528. This document is also available from the customer services department listed above.

A SURVEY OF THE CURRENT STATUS OF RESIDUAL DISINFECTANT MEASUREMENT METHODS FOR ALL CHLORINE SPECIES AND OZONE

by

Gilbert Gordon
Department of Chemistry
Miami University
Oxford, OH 45056

William J. Cooper
Drinking Water Research Center
Florida International University
Miami, Florida 33199

Rip G. Rice
Rice, Incorporated
Ashton, Maryland 20861

Gilbert E. Pacey
Department of Chemistry
Miami University
Oxford, Ohio 45056

Prepared for:

AWWA Research Foundation
6666 W. Quincy Avenue
Denver, CO 80235

November 1987

Published by the American Water Works Association

DISCLAIMER

This study was funded by the American Water Works Association Research Foundation (AWWARF). AWWARF assumes no responsibility for the content of the research study reported in this publication, or for the opinions or statements of fact expressed in the report. The mention of tradenames for commercial products does not represent or imply the approval or endorsement of AWWARF. This report is presented solely for informational purposes.

Although the research described in this document has been funded in part by the United States Environmental Protection Agency through a Cooperative Agreement, CR-811335-01, to AWWARF, it has not been subjected to Agency review and therefore does not necessarily reflect the views of the Agency and no official endorsement should be inferred.

Copyright © 1987
by
American Water Works Association Research Foundation
Printed in U.S.

FOREWORD

This report is part of the on-going research program of the AWWA Research Foundation. The research described in the following pages was funded by the Foundation in behalf of its members and subscribers in particular and the water supply industry in general. Selected for funding by AWWARF's Board of Trustees, the project was identified as a practical, priority need of the incustry. It is hoped that this publication will receive wide and serious attention and that its findings, conclusions, and recommendations will be applied in communities throughout the United States and Canada.

The Research Foundation was created by the water supply industry as its center for cooperative research and development. The Foundation itself does not conduct research; it functions as a planning and management agency, awarding contracts to other institutions, such as water utilities, universities, engineering firms, and other organizations. The scientific and technical expertise of the staff is further ennanced by industry volunteers who serve on Project Advisory Committees and on other standing committees and councils. An extensive planning process involves many hundreds of water professionals in the important task of keeping the Foundation's program responsive to the practical, operational needs of local utilities and to the general research and development needs of a progressive industry.

All aspects of water supply are served by AWWARF's research agenda: resources, treatment and operations, distribution and storage, water quality and analysis, economics and management. The ultimate purpose of this effort is to assist local water suppliers to provide the highest possible quality of water, economically and reliably. The Foundation's Trustees are pleased to offer this publication as contribution toward that end.

This project reviewed all disinfectant residual measurement methods for free chlorine, chloramines, ozone and chlorine dioxide with special attention to interferences that could be experienced by the water utility industry. Recommendations, practical guidance, and cautions on the selection of appropriate residual measurement techniques are summarized (Please see Preface for information on full report).

Jerome B. Gilbert
Chairman, Board of Trustees
AWWA Research Foundation

James F. Manwaring, P.E.
Executive Director
AWWA Research Foundation

PREFACE

This document summarizes the AWWA Research Foundation's 815 page publication "Disinfectant Residual Measurement Methods." That publication (Publication Number 90529) can be ordered from the AWWA Customer Services Department, 6666 W. Quincy Avenue, Denver, CO 80235; telephone, (303) 794-7711.

The purpose of this summary document is to provide the water utility laboratory analyst with guidance in selecting disinfectant residual measurement methods. Either this document or the full report is recommended as a companion to Standard Methods for the Examination of Water and Wastewater.

ACKNOWLEDGEMENTS

The authors wish to express their appreciation to the American Water Works Association - Research Foundation for the opportunity to carry out this detailed review of the literature.

Furthermore, the authors would like to pay tribute to the really important people -- all those who did the original work and made this secondary source of information possible.

Finally, the authors wish to express their appreciation to the members of the Project Advisory Committee:

1) Mark Carter, Ph.D.
   Rocky Mountain Analytical Laboratories

2) J. Donald Johnson, Ph.D.
   University of North Carolina

3) Leown A. Moore
   Drinking Water Research Division--EPA

4) R. Rhodes Trussell, Ph.D.
   James M. Montgomery Consulting Engineers, Inc.

G.G.

W.J.C.

R.G.R

G.E.P.

EXECUTIVE SUMMARY

BACKGROUND

The objective of this Report is to review and summarize all disinfectant residual measurement techniques currently available for free chlorine (along with the various chloramines), combined chlorine, chlorite ion, chlorine dioxide, chlorate ion, and ozone.

Presently, both chlorine dioxide and ozone are gaining considerable favor as alternatives to chlorine disinfection (1). The analytical chemistry for these disinfectants when compared with chlorine is even more complex and less readily understood as evidenced by various surveys (2-5) and detailed research carried out in various laboratories (6-10).

Chlorine dioxide is manufactured at the site of its use by reactions involving sodium chlorite, chlorate ion, chlorine gas and/or hypochlorite ion and sulfuric acid or hydrochloric acid (11-12). Consequently, chlorate ion, chlorite ion, hypochlorite ion and/or hypochlorous acid frequently will be found occurring as by-products or unreacted starting materials. These materials are strong oxidizing agents which are very reactive and behave in many ways similar to chlorine dioxide itself.

There are more than 2,000 water treatment plants today using ozone, and less than half of them are applying ozone solely for disinfection. The large majority of water treatment plants use ozone as a chemical oxidant. Many of the plants applying ozone for disinfection also are using ozone, in the same plant, for chemical oxidation. Analyses for residual ozone in water are applicable only in the treatment plant, either in the ozone contactor(s) or at their outlets. Residual ozone is never present in the distribution system; however, its by-products may be.

There have been numerous attempts to evaluate the relative advantages and disadvantages associated with the measurement of free and combined chlorine. Different criteria are frequently used for the evaluation of the analytical measurements and often suggestions for the improvement of test procedures have gone largely ignored. No comprehensive and objective review of the literature appears to be available. This Report is aimed at providing such a review along with guidance and recommendations as to what criteria water utilities should use in selecting residual monitoring techniques based on circumstances by category.

OBJECTIVES

1. To review and summarize all residual measurement techniques currently available for free chlorine--taking into account the roles of chloramines.

2. To review and summarize all residual measurement techniques currently available for combined chlorine.

3. To briefly review the present understanding of the chlorine-ammonia chemistry and in particular, in relationship to the measurement of chlorine and combined chlorine.

4. To review and summarize all residual measurement techniques currently available for chlorine dioxide, chlorite ion and chlorate ion.

5. To review and summarize the analytical procedures currently used by operating water utilities to control ozone treatment processes, considering disinfection as well as the many oxidative applications of ozone in water treatment applications.

6. To discuss common interferences associated with the measurement of each of the disinfectants/oxidants described above (free chlorine, combined chlorine, chlorite ion, chlorine dioxide, chlorate ion, and ozone).

7. To provide guidance and recommendation for water utilities in selecting residual monitoring techniques for each of the above disinfectants/oxidants.

8. To recommend future research for development of monitoring and analytical methods to improve accuracy, and reduce time and cost requirements for the measurement of the above disinfectants.

In the full report, we present as complete as possible an examination of the world-wide body of literature on analytical methods used by the water utility industry in order to elaborate on the various problems, advantages, disadvantages and known interferences for each of the currently used analytical methods.

Foremost in our objectives has been a better understanding of the reliability of various measurements which have been carried out. Since there are inherent limitations in all measurements, it becomes apparent that there are specific needs for some indication of the reliability of the result, i.e., what is the precision and accuracy of the reported value, and are these acceptable?

The volatility of most of the disinfectants makes sampling and sample handling a major contributor to imprecision and inaccuracies. "Standard additions" is a questionable technique; it should be avoided if possible, since the pipetting and dilution process causes potential loss of disinfectant.

The relative usefulness of each method, along with descriptions of known interferences such as turbidity, organic matter, ionic materials, solids, color, buffering capacity, as well as the nature of the sample and the time between collection of the sample and the actual analysis, are described in this report. It must be emphasized, however, that almost invariably each of the methods described is based on the total oxidizing capacity of the solution being analyzed and is readily subject to interferences from the presence of other potential oxidizing agents and/or intermediates from concomitant chemical reactions. Under ideal conditions some of the methods are accurate to better

than ±1%--especially in the absence of common interferences--whereas other methods are almost semi-quantitative in nature with many common species interfering with both the precision and accuracy of the measurements.

We have also included chlorate ion as a residual species in that only recently have reliable analytical methods begun to appear in the literature (5,6,10). . We also report on the chemistry of the chlorine-ammonia system and the associated breakpoint reactions, because one of the most common inteferences in the measurement of free chlorine is monochloramine.

The most important development for this report has been the decision to include a preliminary section describing an "idealized" analytical method. The need for this section became apparent as our writing progressed describing each of the analytical methods for chlorine. Specific items included in this "idealized" method are accuracy, precision, reproduciblity, lack of interferences, ease of use of the method, lack of false positive values, and so forth.

The benefit of the "idealized" analytical method is to allow individual comparisons and to allow the choice between various methods based on individual method shortcomings. For example, a particular method might have as its only difficulty interference by manganese and iron. In many circumstances, this type of interference might be a major problem. However, should the water supply under consideration not have any manganese or iron, it is quite likely that the method might be very usable--and as a matter of fact well might be the best method of choice.

In other cases, speed of analysis rather than potential interferences (or choice of some other important characteristic) might be the guiding factor in choosing an analytical method. In this way rational choices can be made based on potential and/or real difficulties and/or interferences and as compared to an "idealized" method -- rather than a possibly controversial existing method.

Table I has been constructed as a quick reference guide to the available methods for the determination of water disinfection chemicals and byproducts. Included are pertinent analytical characteristics such as detection limits, working range, interferences, accuracy and precision estimates. The current status of the method, as gleaned from this report, is given. The necessary operator skill level is given to aid the laboratory manager in assessing the manpower requirements for a particular method. Additional information concerning the reasons for the current status is contained in the Recommendation Section of the Executive Summary and the complete report.

As each of the methods is described in detail in the full report, specific conclusions are drawn--along with appropriate recommendations--by comparing the method against the "idealized" analytical method for that species.

One additional benefit of this direct comparison is the possibility of adding or subtracting a method to the list of Standard Methods for the Examination of Water and Wastewater (13), based on a rational set of criteria. It should also be possible in the future to decide on the viability of various methods based on their meeting specific criteria rather than based only on comparisons between analytical laboratories (and personalized subjective reactions to the various methods themselves

TABLE I. CHARACTERISTICS AND COMPARISONS OF ANALYTICAL METHODS©

TYPE OF TEST (METHOD)[f]	Species[f] MEASURED DIRECTLY	DETECTION LIMIT (mg/L)	WORKING RANGE (mg/L)	EXPECTED ACCURACY (± %)	EXPECTED PRECISION (± %)	SKILL* LEVEL
FREE CHLORINE						
"Ideal"	Cl_2 + HOCl/OCl^-	0.001	0.001 - 10	0.5	0.1	1
UV/VISIBLE	Cl_2 + HOCl/OCl^-	~ 1	1 - 100	NR	NR	3
Continuous	Cl_2 + HOCl/OCl^-	1.5	1.5 - 300	NR	NR	3
AMPEROMETRIC TITRATION:						
Forward	Cl_2 + HOCl/OCl^-	0.0018[1]	> 10	NF	NF	2
		0.02 - 0.03[2]	> 10	NF	3 - 50	2
Back	Cl_2 + HOCl/OCl^-	0.002	> 10	3 - 50	NF	2
Continuous	Cl_2 + HOCl/OCl^-	0.005	> 10	NR	1.0	2/3
IODOMETRIC TITRATION:						
Standard	(Total Chlorine)	0.07[3]	0.1 - 10	NR	NR	2
		0.35[4]	0.5 - 10	NR	NR	2
DPD						
FAS Tit'n	Cl_2 + HOCl/OCl^-	0.004[3]	0.01 - 10	NF	2 - 7	1
		0.011[4]	0.01 - 10	NF	2 - 7	1
Color'mtrc	Cl_2 + HOCl/OCl^-	0.01[5]	0.01 - 10	1 - 15	1 - 14	1
Steadifac	Cl_2 + HOCl/OCl^-	0.01[5]	0.01 - 10	NF	NR	1/2
LCV						
Black and Whittle	Cl_2 + HOCl/OCl^-	0.01	0.25 - 3	NF	NR	1
Whittle & Lapteff	Cl_2 + HOCl/OCl^-	0.01	0.25 - 10	NR	0 - 10	2

TABLE I. CHARACTERISTICS (cont'd)

STABILITY REAGENT	STABILITY PRODUCTS	INTERFERENCES	pH RANGE	FIELD TEST	AUTOMATED	CURRENT STATUS
5 YRS	> 1 DAY	NONE	Independent	YES	YES	RECOMMENDED
NA	NA	$ClNH_2$ - Cl_3N backgnd Abs	pH Dependent	NO	NO	RECOMMENDED (LAB TEST)
NA	NA	$ClNH_2$ - Cl_3N	pH Dependent	NO	YES	CONT'D STUDY
1-2 yrs	NA	$ClNH_2$ - Cl_3N	pH Dependent	YES	YES	RECOMMENDED
1-2 yrs	NA	$ClNH_2$ - Cl_3N	pH Dependent	YES	YES	RECOMMENDED
1-2 yrs	NA	$ClNH_2$ - Cl_3N	pH Dependent	YES	YES	RECOMMENDED
1-2 yrs	NA	$ClNH_2$ - Cl_3N	pH Dependent	YES	YES	RECOMMENDED
1 yr	10 min or less	All oxidizing species	pH Dependent	NO	NO	RECOMMENDED (LAB TEST)
1 yr	10 min or less	All oxidizing species	pH Dependent	NO	NO	RECOMMENDED (LAB TEST)
powder stable[6]	30 min	$ClNH_2$ - Cl_3N oxid species	Requires buffer	NO	NO	RECOMMENDED (LAB TEST)
powder stable[6]	30 min	$ClNH_2$ - Cl_3N oxid species	Requires buffer	NO	NO	RECOMMENDED (LAB TEST)
powder stable[6]	30 min	$ClNH_2$ - Cl_3N oxid species	Requires buffer	YES	NO	RECOMMENDED (FIELD TEST)
powder stable[6]	30 min	$ClNH_2$ - Cl_3N oxid species	Requires buffer	YES	NO	RECOMMENDED (FIELD TEST)
months	NR	$ClNH_2$ - Cl_3N oxid species	Requires buffer	YES	NO	ABANDON
months	NR	Oxidizing species	Buffering	YES	NO	RECOMMENDED (LAB TEST)

TABLE I. CHARACTERISTICS AND COMPARISONS OF ANALYTICAL METHODS[a] (cont'd)

TYPE OF TEST (METHOD)[b]	Species[c] MEASURED DIRECTLY	DETECTION LIMIT (mg/L)	WORKING RANGE (mg/L)	EXPECTED ACCURACY (± %)	EXPECTED PRECISION (± %)	SKILL[d] LEVEL
FACTS						
Color'mtrc	Cl_2 + HOCl/OCl^-	0.1	0.25 - 10	5 - 20	1 - 11	1
Spect'photo	Cl_2 + HOCl/OCl^-	0.012	0.05 - 10	NF	NR	1
METHYL ORANGE	Cl_2 + HOCl/OCl^-	NR	NR	NR	NR	2
O-TOLIDINE	Cl_2 + HOCl/OCl^-	NR	NR	NR	NR	1
3,3'-DIMETHYLNAPHTHIDINE	Cl_2 + HOCl/OCl^-	0.05	NR	NR	2 - 6	2/3
O-DIANISIDINE	Cl_2 + HOCl/OCl^-	0.1	NR	NR	NR	2/3
CHEMILUMINESCENCE						
Hydrogen Peroxide	Cl_2 + HOCl/OCl^-	NR	NR	NR	NR	3
Luminol	OCL^-	0.0007	NR	NR	NR	3
Lophine	OCL^-	0.14	0.2 - 20	NR	NR	3
ELECTRODE METHODS						
Membrane	HOCL	0.004	0.04 - 1	NR	1.6	3
Bare-wire	Cl_2 + HOCl/OCl^-	0.1	0.1 - 3	NR	1 - 25	3
Potent'mtrc	Cl_2 + HOCl/OCl^-	0.005	0.01 - 1	1 - 6	7 - 10	2
AgI Volt'mtrc	Cl_2 + HOCl/OCl^-	0.01	0.1 - 10	NR	NR	3

TABLE I. CHARACTERISTICS (cont'd)

STABILITY REAGENT	STABILITY PRODUCTS	INTERFERENCES	pH RANGE	FIELD TEST	AUTOMATED	CURRENT STATUS
2 years[7]	30 min at high Cl_2	Oxidizing species	Buffering critical	YES	NO	RECOMMENDED
2 years[7]	30 min at high Cl_2	Oxidizing species	Buffering critical	YES	NO	RECOMMENDED
NF	NF	Oxidizing species	Buffering required	YES	NO	ABANDON
NF	NF	Oxidizing species	Buffering required	YES	NO	ABANDON
NF	15-20 min	Oxidizing species	NR	NO	NO	ABANDON
NF	55 min	Oxidizing species	NR	NO	NO	ABANDON
NR	<1 sec	None	Independent	NO	POSSIBLE	ABANDON
NR	<1 sec	Oxidizing species	pH Dependent	NO	POSSIBLE	CONT'D STUDY
NR	<1 sec	None	pH Dependent	NO	YES	CONT'D STUDY
NA	NA	Oxidizing Gas species	Dependent on pH	POSSIBLE	POSSIBLE	CONT'D STUDY
NA	NA	Oxidizing species, Cl^-	NR	POSSIBLE	POSSIBLE	CONT'D STUDY
3 months	NA	Oxidizing species Cl^-	pH Dependent	YES	YES	RECOMMENDED
NA	NA	Oxidizing species, Cl^-	Buffer required	POSSIBLE	POSSIBLE	CONT'D STUDY

TABLE I. CHARACTERISTICS AND COMPARISONS OF ANALYTICAL METHODS[a] (cont'd)

TYPE OF TEST (METHOD)[b]	Species[c] MEASURED DIRECTLY	DETECTION LIMIT (mg/L)	WORKING RANGE (mg/L)	EXPECTED ACCURACY (± %)	EXPECTED PRECISION (± %)	SKILL[d] LEVEL
TOTAL CHLORINE[e]						
"Ideal"	Cl_2 + HOCl/OCl^- NH_2Cl $NHCl_2$ NCl_3	0.001	0.001 - 10	0.5	0.1	1
AMPEROMETRIC TITRATION:						
Forward	Cl_2 + HOCl/OCl^- NH_2Cl $NHCl_2$ NCl_3	0.0018[1]	> 10	NF	NF	2
	Cl_2 + HOCl/OCl^- NH_2Cl $NHCl_2$ NCl_3	0.02 -0.03[2]	> 10	NF	3 - 50	2
Back	Cl_2 + HOCl/OCl^- NH_2Cl $NHCl_2$ NCl_3	0.002	> 10	3 - 50	NF	2
Continuous	Cl_2 + HOCl/OCl^- NH_2Cl $NHCl_2$ NCl_3	0.005	> 10	NR	1.0	2/3
IODOMETRIC TITRATION:						
Standard	Cl_2 + HOCl/OCl^- NH_2Cl $NHCl_2$ NCl_3	0.07[3]	0.1 - 10	NR	NR	2
	Cl_2 + HOCl/OCl^- NH_2Cl $NHCl_2$ NCl_3	0.35[4]	0.5 - 100	NR	NR	2
DPD						
FAS Tit'n	Cl_2 + HOCl/OCl^- NH_2Cl $NHCl_2$ NCl_3	0.004[3]	0.01 - 10	NF	2 - 7	1
	Cl_2 + HOCl/OCl^- NH_2Cl $NHCl_2$ NCl_3	0.11[4]	0.01 - 10	NF	2 - 7	1
Color'metrc	Cl_2 + HOCl/OCl^- NH_2Cl $NHCl_2$ NCl_3	0.001[3]	0.01 - 10	1 - 15	1 - 14	1
LCV						
Black & Whittle	Cl_2 + HOCl/OCl^- NH_2Cl $NHCl_2$ NCl_3	0.005	0.25 - 3	NF	4 - 10	1

TABLE I. CHARACTERISTICS (cont'd)

STABILITY REAGENT	STABILITY PRODUCTS	INTERFERENCES	pH RANGE	FIELD TEST	AUTOMATED	CURRENT STATUS
5 YRS	> 1 DAY	NONE	Independent of pH	YES	YES	RECOMMENDED
1 - 2 yrs	NA	Oxidizing Species	pH Dependent	YES	YES	RECOMMENDED
1 - 2 yrs	NA	Oxidizing Species	pH Dependent	YES	YES	RECOMMENDED
1 - 2 yrs	NA	Oxidizing Species	pH Dependent	YES	YES	RECOMMENDED
1 - 2 yrs	NA	Oxidizing Species	pH Dependent	YES	YES	RECOMMENDED
1 yr	10 min	All oxidizing species	pH Dependent	NO	NO	RECOMMENDED (LAB TEST)
1 yr	10 min	All oxidizing species	pH Dependent	NO	NO	RECOMMENDED (LAB TEST)
powder stable[6]	30 min	Oxidizing Species	Requires buffer	NO	NO	RECOMMENDED (LAB TEST)
powder stable[6]	30 min	Oxidizing Species	Requires buffer	YES	NO	RECOMMENDED (FIELD TEST)
powder stable[6]	30 min	Oxidizing Species	Requires buffer	YES	NO	RECOMMENDED (FIELD TEST)
months	NR	Oxidizing Species	Requires buffer	YES	NO	ABANDON

TABLE I. CHARACTERISTICS AND COMPARISONS OF ANALYTICAL METHODS[6] (cont'd)

TYPE OF TEST (METHOD)[1]	Species[1] MEASURED DIRECTLY	DETECTION LIMIT (mg/L)	WORKING RANGE (mg/L)	EXPECTED ACCURACY (± %)	EXPECTED PRECISION (± %)	SKILL[4] LEVEL
Whittle & Lapteff	Cl_2 + $HOCl/OCl^-$ NH_2Cl $NHCl_2$ NCl_3	0.01	0.25 - 10	NF	4 - 10	2
FACTS						
Color'mtrc	Cl_2 + $HOCl/OCl^-$ NH_2Cl $NHCl_2$ NCl_3	0.1	0.25 - 10	5 - 20	1 - 11	1
Spect'photo	Cl_2 + $HOCl/OCl^-$ NH_2Cl $NHCl_2$ NCl_3	0.012	0.05 - 10	NF	NR	1
ELECTRODE METHODS						
Pot'metric	Cl_2 + $HOCl/OCl^-$ NH_2Cl $NHCl_2$ NCl_3	0.005	0.01 - 1	1 - 6	7 - 10	2
MONOCHLORAMINE[6]						
"Ideal"	NH_2Cl	0.001	0.001 - 10	0.5	0.1	1
UV/VISIBLE	NH_2Cl	- 1	1 - 100	NR	NR	3
AMPEROMETRIC TITRATION:						
Forward	NH_2Cl	NR	> 10	NF	0 - 10	2
Back	NH_2Cl	NR	> 10	NF	NF	2
DPD						
FAS Tit'n	NH_2Cl	NR	0.01 - 10	NF	2 - 7	1
Color'mtrc	NH_2Cl	NR	0.01 - 10	NF	5 - 75	1

TABLE I. CHARACTERISTICS (cont'd)

REAGENT	STABILITY PRODUCTS	INTERFERENCES	pH RANGE	FIELD TEST	AUTOMATED	CURRENT STATUS
months	NR	Oxidizing Species	Buffering	YES	NO	RECOMMENDED (LAB TEST)
2 YRS	30 min at high Cl_2	Oxidizing Species	Buffering critical	YES	NO	RECOMMENDED
2 YRS	30 min at high Cl_2	Oxidizing species	Buffering critical	YES	NO	RECOMMENDED
3 months	NA	Oxidizing Species, Cl^-	pH Dependent	YES	YES	RECOMMENDED
5 YRS	> 1 DAY	NONE	Independent	YES	YES	RECOMMENDED
NA	NA	Cl_2NH - Cl_3N backgnd Abs	pH Dependent	NO	NO	RECOMMENDED (LAB TEST)
1-2 yrs	NA	Cl_2NH - Cl_3N	pH Dependent	YES	YES	RECOMMENDED
1-2 yrs	NA	Cl_2NH - Cl_3N	pH Dependent	YES	YES	RECOMMENDED
powder stable[6]	30 min	$ClNH_2$ - Cl_3N oxid species	Requires buffer	NO	NO	RECOMMENDED (LAB TEST)
powder stable[6]	30 min	$ClNH_2$ - Cl_3N oxid species	Requires buffer	YES	NO	RECOMMENDED (FIELD TEST)

TABLE I. CHARACTERISTICS AND COMPARISONS OF ANALYTICAL METHODS[a] (cont'd)

TYPE OF TEST (METHOD)[b]	Species[c] MEASURED DIRECTLY	DETECTION LIMIT (mg/L)	WORKING RANGE (mg/L)	EXPECTED ACCURACY (± %)	EXPECTED PRECISION (± %)	SKILL[d] LEVEL
LCV						
Whittle & Lapteff	NH_2Cl	NR	0.25 - 10	NF	0 - 43	2
ELECTRODE METHODS						
Silver iodide Voltammetric	NH_2Cl	NR	0.1 - 10	NR	NR	3
DICHLORAMINE[e]						
"Ideal"	$NHCl_2$	0.001	0.001 - 10	0.5	0.1	1
UV/VISIBLE	$NHCl_2$	~ 1	1 - 100	NR	NR	3
AMPEROMETRIC TITRATION:						
Forward	$NHCl_2$	NR	> 10	NF	0	2
Back	$NHCl_2$	NR	> 10	3 - 50	NF	2
DPD						
FAS Tit'n	$NHCl_2$	NR	0.01 - 10	NF	NF	1
Color'mtrc	$NHCl_2$	NR	0.01 - 10	NF	0 - 100	1
LCV						
Whittle & Lapteff	$NHCl_2$	NR	0.25 - 10	NF	10 - 150	2

TABLE I. CHARACTERISTICS (cont'd)

STABILITY REAGENT	STABILITY PRODUCTS	INTERFERENCES	pH RANGE	FIELD TEST	AUTOMATED	CURRENT STATUS
months	NR	Oxidizing species	Requires buffer	YES	NO	RECOMMENDED (LAB TEST)
NA	NA	Oxidizing species	Requires buffer	POSSIBLE	POSSIBLE	CONT'D STUDY
5 YRS	> 1 DAY	NONE	Independent of pH	YES	YES	RECOMMENDED
NA	NA	$ClNH_2$ & Cl_3N backgnd Abs	pH Dependent	NO	NO	RECOMMENDED (LAB TEST)
1-2 yrs	NA	$ClNH_2$ & Cl_3N	pH Dependent	YES	YES	RECOMMENDED
1-2 yrs	NA	$ClNH_2$ & Cl_3N	pH Dependent	YES	YES	RECOMMENDED
powder stable[6]	30 min	$ClNH_2$ & Cl_3N oxid species	Requires buffer	NO	NO	RECOMMENDED (LAB TEST)
powder stable[6]	30 min	$ClNH_2$ & Cl_3N oxid species	Requires buffer	YES	NO	RECOMMENDED (FIELD TEST)
months	NR	Oxidizing species	Requires buffer	YES	NO	RECOMMENDEDD (LAB TEST)

TABLE I. CHARACTERISTICS AND COMPARISONS OF ANALYTICAL METHODS[9] (cont'd)

TYPE OF TEST (METHOD)[1]	Species[1] MEASURED DIRECTLY	DETECTION LIMIT (mg/L)	WORKING RANGE (mg/L)	EXPECTED ACCURACY (± %)	EXPECTED PRECISION (± %)	SKILL LEVEL
TRICHLORAMINE[9]						
"Ideal"	NCl_3	0.001	0.001 - 10	0.5	0.1	1
UV/VISIBLE	NCl_3	NR	NR	NR	NR	3
AMPEROMETRIC TITRATION:						
Forward	NCl_3	NR	> 10	NF	5 - 100	2
DPD						
FAS Tit'n	NCl_3	NR	0.01 - 10	NR	NR	1
Color'mtrc	NCl_3	NR	0.01 - 10	NR	NR	1
LCV						
Whittle & Lapteff	NCl_3	NR	0.25 - 10	NR	NR	2
CHLORINE DIOXIDE						
"Ideal"	ClO_2	0.001	0.001 - 10	0.5	0.1	1
IODOMETRIC	ClO_2	0.002	0.002 - 95	1 - 2	1 - 2	2
AMPEROMETRIC	ClO_2[10]	0.012	0.02 - ??	1 - 15	1 - 15	3
DPD	ClO_2[10-11]	0.008	0.008 - 20	10	7 - 15	2
UV						
Manual	ClO_2	0.05	0.05 - 500	5	5	2
FIA	ClO_2	0.25	0.25 - 142	2	1	1

TABLE I. CHARACTERISTICS (cont'd)

STABILITY REAGENT	STABILITY PRODUCTS	INTERFERENCES	pH RANGE	FIELD TEST	AUTOMATED	CURRENT STATUS
5 YRS	> 1 DAY	NONE	Independent	YES	YES	RECOMMENDED
NA	NA	$ClNH_2$ - Cl_2NH backgnd Abs $HOCl/OCL^-$	pH Dependent	NO	NO	RECOMMENDED (LAB TEST)
1-2 yrs	NA	$ClNH_2$ - Cl_2NH	pH Dependent	NO	YES	RECOMMENDED (LAB TEST)
powder stable[6]	30 min	$ClNH_2$ - Cl_2NH oxid species	Requires buffer	NO	NO	RECOMMENDED (LAB TEST)
powder stable[6]	30 min	$ClNH_2$ - Cl_2NH oxid species	Requires buffer	YES	NO	RECOMMENDED (LAB TEST)
months	NR	Oxidizing species	Requires buffer	YES	NO	RECOMMENDED (LAB TEST)
5 YRS	> 1 DAY	NONE	Independent	YES	YES	RECOMMENDED
1 YR	Subject to oxidation	Oxidizing species	2 - 5	NO	NO	NOT RECOMMENDED
good	Subject to oxidation	Metal ions & nitrite ion	7	NO	NO	CURRENTLY USED
solid stable[6]	< 30 min	Oxidizing species	7	NO	NO	NOT RECOMMENDED
none	none	Other UV absorbers.	Independent	NO	YES	RECOMMENDED (LAB TEST)
none	none	none	Independent	NO	YES	RECOMMENDED (LAB TEST)

TABLE I. CHARACTERISTICS AND COMPARISONS OF ANALYTICAL METHODS© (cont'd)

TYPE OF TEST (METHOD)[1]	Species[1] MEASURED DIRECTLY	DETECTION LIMIT (mg/L)	WORKING RANGE (mg/L)	EXPECTED ACCURACY (± %)	EXPECTED PRECISION (± %)	"SKILL" LEVEL
ACVK[12]	ClO_2	0.04	0 - 25	NR	NR	1
CHLOROPHENOL RED	ClO_2	0.003	0.003 - 1	10	5	1
o-TOLIDINE	ClO_2	0.1	NR	NR	NR	1
INDIGO BLUE	ClO_2	0.01	NR	NR	1.5	1
CHEMILUMINESCENCE						
Luminol	ClO_2	0.3	0.3 - 1	NR	8	1
GDFIA[13]	ClO_2	0.005	0.005 - 74	2	1	1
ELECTROCHEM.						
Pt Microelec.	$ClO_2 + ClO_2^-$	1.3	NR	7	NR	2/3
Vit. Carbon	ClO_2	32	NR	NR	NR	3
Voltam. Mem.	ClO_2	0.25	NR	NR	NR	2
Rotating Volt. Membrane	ClO_2	0.30	0.30 - 3	NR	6.4	2/3
CHLORITE ION						
"Ideal"	ClO_2^-	0.001	0.001 - 10	0.5	0.1	1
AMPEROMETRIC						
Iodometric	ClO_2^-	0.05	0.05 - 95	5	5	2
IODOMETRIC						
Sequential	ClO_2^-	0.011	> 1	1	1	3
Modified	ClO_2^-	0.3	0.5 - 20	0.5	1 - 3	3
DPD	ClO_2^-	0.01	0.01 - 10	5	5	2

TABLE I. CHARACTERISTICS (cont'd)

STABILITY REAGENT	STABILITY PRODUCTS	INTERFERENCES	pH RANGE	FIELD TEST	AUTOMATED	CURRENT STATUS
NR	NR	minimal	8.1 - 8.4	NO	NO	CONT'D STUDY
6 months	NR	unknown	7	YES	NO	NOT RECOMMENDED
NR	NR	Oxidizing species	NR	NO	NO	NOT RECOMMENDED
good	good	O_3 Cl_2	> 4	NO	NO	NOT RECOMMENDED
1 DAY	< 1 sec	NR	NR	NO	NO	NOT RECOMMENDED
1 DAY	< 1 sec	Cl_2	> 12	NO	YES	RECOMMENDED CONT'D STUDY
none	none	ClO_2^-	5 - 5.5	NO	NO	CONT'D STUDY
none	none	ClO_2^-	3.5 - 7	NO	NO	CONT'D STUDY
none	none	HOCl	7.8	NO	NO	CONT'D STUDY
none	none	HOCl	5 - 5.5	NO	NO	CONT'D STUDY
5 YRS	> 1 DAY	NONE	Independent	YES	YES	RECOMMENDED
1 YR	Subject to oxidation	Oxidizing species	2 - 5	NO	NO	NOT RECOMMENDED
good	Subject to oxidation	Metal ions & nitite ion	7	NO	NO	RECOMMENDED AT HIGH CONC.
good	Subject to oxidation	Metal ions & nitite ion	2	NO	NO	CONT'D STUDY
Solid stable[e]	< 30 min	Oxidizing species	7	NO	NO	NOT RECOMMENDED

TABLE I. CHARACTERISTICS AND COMPARISONS OF ANALYTICAL METHODS[a] (cont'd)

TYPE OF TEST (METHOD)[b]	Species[c] MEASURED DIRECTLY	DETECTION LIMIT (mg/L)	WORKING RANGE (mg/L)	EXPECTED ACCURACY (± %)	EXPECTED PRECISION (± %)	SKILL[d] LEVEL
CHLORATE ION						
"Ideal"	ClO_3^-	0.001	0.001 - 10	0.5	0.1	1
IODOMETRIC						
Sequential	ClO_3^-	0.064	> 1	2	2 - 5	3
Modified	ClO_3^-	0.3	0.3 - 20	1	1 - 3	3
FIA	ClO_3^-	0.08	0.08 - 0.8	3.5	1	2
DPD	ClO_3^-	0.01	0.01 - 10	5	5	2
OZONE						
"Ideal"	O_3	0.01	0.01 - 10	0.5	0.1	1
IODOMETRIC	O_3	0.002	0.5 - 100	1 - 35	1 - 2	2
ARSENIC BACK TITRATION	O_3	0.002	0.5 - 65	1 - 5	1 - 2	2
FACTS	O_3	0.02	0.5 - 5	5 - 20	1 - 5	2
DPD	O_3	0.1	0.2 - 2	5 - 20	5	2
INDIGO						
Spect'photo	O_3	0.001	0.01 - .1	1	0.5	1
		0.006	0.05 - .5	1	0.5	1
		0.1	> 0.3	1	0.5	1

TABLE I. CHARACTERISTICS (cont'd)

STABILITY REAGENT	STABILITY PRODUCTS	INTERFERENCES	pH RANGE	FIELD TEST	AUTOMATED	CURRENT STATUS
5 YRS	> 1 DAY	NONE	Independent	YES	YES	RECOMMENDED
good	Subject to oxidation	Metal ions & nitrite ion	7	NO	NO	RECOMMENDED AT HIGH CONC.
good	Subject to oxidation	Metal ions & nitrite ion	2	NO	NO	CONT'D STUDY
1 year	1 day	Oxidizing species	< 1	NO	YES	USED AFTER ALL ClO_2 ClO_2^- GONE
Solid stable[6]	< 30 min	Oxidizing species	7	NO	NO	NOT RECOMMENDED
5 YRS	> 1 DAY	NONE	Independent	YES	YES	RECOMMENDED
1 YR	subject to oxidation	All ozone by products and oxidants	< 2	NO	NO	ABANDON
1 YR	subject to oxidation	Oxidizing species	6.8	NO	NO	CONT'D STUDY
2 YRS	no fading first 5 min	Oxidizing species	6.6	NO	NO	NOT RECOMMENDED
Solid stable[6]	< 30 min	Oxidizing species	6.4	NO	NO	NOT RECOMMENDED
good	good	Cl_2, Mn ions Br_2 I_2	2	NO	YES	RECOMMENDED
good	good	Cl_2, Mn ions Br_2 I_2	2	NO	YES	RECOMMENDED
good	good	Cl_2, Mn ions Br_2 I_2	2	NO	YES	RECOMMENDED

TABLE I. CHARACTERISTICS AND COMPARISONS OF ANALYTICAL METHODS® (cont'd)

TYPE OF TEST (METHOD)[4]	Species[1] MEASURED DIRECTLY	DETECTION LIMIT (mg/L)	WORKING RANGE (mg/L)	EXPECTED ACCURACY (± %)	EXPECTED PRECISION (± %)	SKILL[2] LEVEL
INDIGO (cont'd)						
Visual	O_3	0.1	0.01 - 0.1	5	5	1
			> 0.1	5	5	1
GDFIA	O_3	0.03	0.03 - 0.4 other ranges possible	1	0.5	2
LCV	O_3	0.005	NR	NR	NR	1
ACVK	O_3	0.25	0.05 - 1	NR	NR	1
o-TOLIDINE	O_3	NOT QUANTITATIVE		NR	NR	1
BISTERPYRIDINE	O_3	0.004	0.05 - 20	2.7	2.1	3
CARMINE INDIGO	O_3	< 0.5	NR	NR	NR	1
ELECTROCHEM						
Amperometric	Total oxidants	- 1	NR	5	5	2
Amperometric iodometric	Total Oxidants	- 0.5	NR	5	5	2
Bare electrode	O_3	0.2	NF	5	5	2
Membrane elect.	O_3	0.062	NF	5	5	1
Differential Pulse Dropping Mercury	O_3	NR	NR	NR	NR	3
Differential Pulse Polarography	O_3	0.003	NR	NR	NR	3
Potentiometric	O_3	NR	NR	NR	NR	1

TABLE I. CHARACTERISTICS (cont'd)

STABILITY REAGENT	STABILITY PRODUCTS	INTERFERENCES	pH RANGE	FIELD TEST	AUTOMATED	CURRENT STATUS
good	good	Cl_2, Mn ions Br_2 I_2	2	YES	NO	RECOMMENDED
good	good	Cl_2, Mn ions Br_2 I_2	2	YES	NO	RECOMMENDED
good	good	Cl_2 at > 1mg/L	2	NO	YES	COMPARISON STUDIES NEEDED
Stable	Stable	S^{2-} SO^{3-} Cr^{6+}	2	NO	NO	CONT'D STUDY
NR	NR	Mn > 1 mg/L Cl_2 > 10 mg/L	2	NO	NO	CONT'D STUDY
NR	NR	Metal ions, NO_2^-	2	YES	NO	ABANDON
Good	Good	Cl_2	< 7	NO	YES	RECOMMENDED (LAB TEST)
NR	NR	NR	2	NO	NO	CONT'D STUDY
none	NA	Oxidizing species	2	NO	YES	RELATIVE MONITORING
1 YR	Subject to oxidation	Oxidizing species	4 - 4.5	NO	NO	NOT RECOMMENDED
none	NR	NR	NR	NO	YES	CONT'D STUDY
none	NR	NR	NR	NO	POSSIBLE	CONT'D STUDY
none	NR	NR	NR	NO	NO	RESEARCH LAB
none	NR	NR	4	NO	NO	CONT'D STUDY
none	NR	NR	NR	NO	YES	CONT'D STUDY

TABLE I. CHARACTERISTICS AND COMPARISONS OF ANALYTICAL METHODS[@]

TYPE OF TEST (METHOD)[!]	Species[†] MEASURED DIRECTLY	DETECTION LIMIT (mg/L)	WORKING RANGE (mg/L)	EXPECTED ACCURACY (± %)	EXPECTED PRECISION (± %)	SKILL[*] LEVEL
UV	O_3	0.02	> 0.02	0.5[1,4]	0.5	1
ISOTHERMAL PRESSURE CHANGE	O_3	4×10^{-5}	4×10^{-5} - 10	0.5	0.5	1
OZONE GAS PHASE						
"Ideal"	O_3	1	1 - 50,000	1	1	1
UV	O_3	0.5	0.5 - 50,000	2	2.5	1/2
Stripping Absorption Iodometry	O_3	0.002	0.5 - 100	1 - 35	1 - 2	2
Chemiluminescence	O_3	0.005	0.005 - 1	7	5	1/2
Gas phase titration	O_3	0.005	0.005 - 30	8	3.5	2
Rhodamine B/ Gallic Acid	O_3	0.001	NR	NR	5	2
Amperometry	O_3	NR	NR	NR	NR	2

[!] for page numbers in the full report, refer to the Alphabetical Index
[†] direct determination of the species measured without interferences
[*] Operator Skill Levels: 1 = minimal, 2 = good technician, 3 = experienced chemist

NA Not applicable
NR Not reported
NF Not found

1 Using research grade electrochemical equipment
2 Using commercial titrator
3 Spectrophotometric endpoint detection
4 Visual endpoint detection.
5 Using test kit
6 Liquid reagent is unstable
7 Stablility is very dependent on the purity of the 2-propanol used

TABLE I. CHARACTERISTICS (cont'd)

STABILITY REAGENT	STABILITY PRODUCTS	INTERFERENCES	pH RANGE	FIELD TEST	AUTOMATED	CURRENT STATUS
none	NA	Other Absorber	Independent	NO	YES	ESTABLISH MOLAR ABSORB-TIVITY
none	good	none	Independent	NO	YES	COMPARISON STUDY
none	none	none	Independent	YES	YES	RECOMMENDED
none	none	none	NA	YES	YES	RECOMMENDED
good	good	SO_2 NO_2	NA	YES	NO	ABANDON
stable	< 1 sec	none	NA	YES	YES	RECOMMENDED
stable	stable	none	NA	YES	NO	NOT RECOMMENDED
problems		NR	NA	YES	POSSIBLE	NOT RECOMMENDED
none	none	NR	NA	YES	YES	NOT RECOMMENDED

8 Total Chlorine is all chlorine species with +1 oxidation state
9 Very little actual work has been carried out on selective determination of chloramines. The values reported are from extrapolated studies that had objectives other than the selective determination of chloramines. Most methods are indirect procedures which are not recommended
10 Indirect method
11 1/5 of ClO_2 determined
12 Acid chrome violet potassium (ACVK)
13 Gas diffusion flow injection analysis (GDFIA)
14 Based on current molar absorbtivity and proper sample handling tecniques. Current best estimates of molar absorbtivity of 2900-3300 give a possible error of > 10%.
e Taken from Gordon, Cooper, Rice, and Pacey, AWWA-RF Review on "Disinfectant Residual Measurements Methods" (1987)

Chapter 4 (Indexed Reference Citations) has been included in this report in order to assist readers in locating particular papers of interest. The 48 categories for chlorine, chloramines, and the oxy-chlorine species, along with the additional 60 categories for ozone, should make the task of finding individual papers of interest considerably less cumbersome. Papers which describe several methods have been included in each of the appropriate categories. All together, the 1,400 references cited in Chapters 1-3 number more than 2,000 individual citations when distributed in the indexed form of Chapter 4.

Chapter 5 is an alphabetical listing of the individual references citations. Finally, a detailed Index has been included in order to assist readers in locating subjects of specific interest. We hope the readers will find these additional chapters as useful as have we in preparing this report.

RECOMMENDATIONS

General Statements on Comparisons.

There have been and will continue to be reports of methods comparison. One of the most important considerations for a method is accuracy, i.e. the ability of the method to determine the correct concentration of a disinfectant in solution. An equally important consideration is precision, i.e. how well does the analytical method reproducibly measure the same concentration. Frequently experiments are conducted to determine the "equivalency" of the methods. From such results, methods may be found to be equivalent, but the only analytical considerations tested were accuracy, as judged by a Referee Method, and precision, judged for each method based on the experimental design.

No considerations were given to specificity or analyst preference. Yet one of the most difficult tasks in the area of disinfection analytical methods development is comparison testing. It is recommended that a protocol be developed to initiate comparison of the disinfectants. This protocol should include all of the factors delineated in the "Ideal Method" and should be undertaken in both laboratory controlled conditions and at selected water treatment plants around the country.

Chlorine Chemistry.

Clearly, the conversion to moles, equivalents, or normality from units of mg/L (as Cl_2) or mg/L (as other oxidants) can easily be confused (and confusing). Our recommendation is that all oxidizing agents be reported in molar units (M) and, if necessary, in mg/L of that oxidizing agent as measured (i.e. mg/L (as Cl_2) or mg/L (as ClO_2^-) or mg/L (as ClO_3^-). Furthermore, we recommend that oxidizing equivalents per mole of oxidant be reported to minimize additional potential confusion. For example, when ClO_2 is reduced to ClO_2^-, this corresponds to one equivalent/mole; on the other hand, when ClO_2 is reduced to Cl^-, this corresponds to five equivalents/mole. A summary of molecular weights and oxidizing equivalents for the various chlorine species, oxychlorine species and ozone is given in Table II.

TABLE II. EQUIVALENT WEIGHTS FOR CALCULATING CONCENTRATIONS ON THE BASIS OF MASS.

Species	Molecular Weight g/mol	Electrons Transferred	Equivalent Weight g/eq
Chlorine	70.906	2	35.453
Monochloramine	51.476	2	25.738
Dichloramine	85.921	4	21.480
Trichloramine	120.366	6	20.061
Chlorine dioxide	67.452	1	67.452
Chlorine dioxide	67.452	5	13.490
Chlorite ion	67.452	4	16.863
Chlorate ion	83.451	6	13.909
Ozone	47.998	2	23.999
Ozone	47.998	6	8.000

Several mechanisms have been proposed for the decomposition of dichloramine, but the complete mechanism at the breakpoint has not been resolved. Clearly, the chemistry is complicated and varies markedly with solution composition. A detailed understanding of the specific reactions involved requires a detailed knowledge of the concentration of all chloramine species in the system.

Nitrogen-containing organic compounds may be present in surface water and ground-water. Because of analytical complexities, very few detailed studies have been undertaken to determine the individual compounds present and the concentration at which they exist. Kjeldahl nitrogen analysis is used frequently, but this does not provide any detailed information with regard to individual compounds. The area of organic nitrogen and the determination of specific compounds in natural waters is one of the increasing interest and requires considerably more research in characterization and methods development.

Ultraviolet Methods.

In general, because the molar absorptivities are quite low for chlorine and chloramine species, ultraviolet methods are not considered useful in routine monitoring of chlorine residuals. In addition to the low molar absorptivities, there is often background absorbance that may interfere with the measurement in various natural waters. However, these measurements are of use in standardizing the chlorine species in distilled waters and are often used in experimental work

related to chlorine speciation. This method does have considerable potential for the determination of relatively high concentrations of halogens, particularly in relatively clean water. This method might find use in monitoring chlorine species in water treatment plants. However, with a more elaborate multiwavelength spectrophotometer and computer-controlled spectral analysis, it might be possible to analyze several halogens simultaneously.

It is also possible that additional methods using permeable membranes could be developed for the simultaneous determination of chlorine species in aqueous solution. Additional work is necessary in this area. Although the molar absorptivities of the species is not of a magnitude as to lend it to the routine determination of the dilute (less than 10^{-5} M) chlorine and chlorine-ammonia species, it is potentially helpful in determining the concentration of standard solutions. Absorption spectrophotometric analysis has and will continue to be very important in the area of chlorine chemistry. It can be used in the unambiguous determination of relatively high concentrations of the species in relatively pure water.

Continuous Amperometric Titration Method.

Interferences appear to be reduced using the continuous amperometric method because the reagents are added to the sample just prior to contacting the indicating electrode. Thus, when compared to the amperometric titration, the amount of interference by iodate ion, bromate ion, copper(II), iron(III), and manganese(IV) is reduced by approximately one-tenth. No reports appear to be available in the literature on the determination of mixed oxidants using the amperometric method. Such experiments need to be carried out. In addition, few experiments have been reported which clearly demonstrate that the electrodes remain uncontaminated for drinking water or waste water systems. In the absence of such comparisons, the accuracy of any electrode procedure may be questionable.

However, the amperometric titration determination of chlorine species remains the standard for routine laboratory measurements. Given proper analyst training and experience, the commercially available instrumentation is sensitive and precise. This method should remain as the method for laboratory use and accuracy comparisons. It requires more analyst experience than colorimetric methods, but can be relied on to give very accurate and precise measurements. It should be noted that care must be exercised when using one titrator for the measurement of both free and combined chlorine. Small quantities of iodide ion can lead to errors when differentiating between free and combined chlorine. Careful rinsing with chlorine demand free water (CDFW) is a must! Additional development of automated back-titration equipment with the goal of lowering the limit of detection and improving the reproducibility would be highly beneficial.

Iodometric Titration Method.

The iodometric titration is useful for determining high concentrations of total chlorine. The most useful range is 1 mg/L (as Cl_2) or greater. It is a common oxidation-reduction titration analytical method and provides a reference procedure for total chlorine. Although not necessarily used routinely, most laboratories use it as a reference method and it is not likely ever to be eliminated from use.

Colorimetric Methods.

It is reported in Standard Methods (13) that nitrogen trichloride can be measured using the DPD method: however, the method has not been confirmed by independent investigations and should be used only as a qualitative method. Additional research is necessary to determine the effectiveness of the DPD method for nitrogen trichloride. The effect of the presence of mercuric chloride in the reagents for minimizing the breakthrough of monochloramine into the free chlorine reading with the DPD method has been shown. It is very important that the addition of mercuric chloride to the buffer be followed to minimize the direct reaction of monochloramine with DPD. This phenomenon is not thoroughly understood. This effect should be studied more thoroughly and the principle may be applicable to all of the colorimetric methods.

The use of thioacetamide was evaluated for monochloramine (using DPD-Steadifac). It was shown under these conditions to eliminate any positive inteference in the free residual measurement. These results are not as yet understood, but the implication is that the chemistry of oxidation is different for monochloramine and free chlorine. These results suggest that more work is necessary to better define the reactions involved, and this may lead to a more usable analytical procedure. This procedure is recommended for use in waters that are suspected to be relatively high in combined chlorine.

The DPD-Ethyl Acetate Extraction Procedure is a modification of the DPD chemistry. The method is based on the oxidation of iodide ion by active chlorine followed by extraction of the iodine species into ethyl acetate. This procedural modification may be of use in the determination of total residual chlorine in both the field and laboratory. Additional work is necessary before it can be used to any great extent. It does not appear to offer substantial advantages to the already well tested colorimetric method for laboratory measurements.

The DPD methods have become the most widely used procedures for the measurement of chlorine. This is not likely to change. The DPD color reagent, in liquid form, has been shown to be quite unstable and is not recommended for use. It is sensitive to oxidation by oxygen and thus requires a control measurement. Clearly, it is better to use dry reagents.

Leuco Crystal Violet, LCV.

No studies have been reported that examine the interference of chlorine dioxide and/or ozone in the LCV method. It is anticipated that these oxidants would interfere in the method, and studies should be conducted to quantify these potential interferents.

Syringaldazine; FACTS.

A study using syringaldazine in a continuous method to differentiate free from combine chlorine has been reported. It was concluded that it could be used and was useful in controlling free chlorination. Further work would have to be conducted to use this or any colorimetric method in continuous analyzers.

Chemiluminescence.

Several papers have appeared that detail the reaction of hydrogen peroxide and hypochlorous acid and the resulting chemiluminescence. The mechanism has been relatively well established and the chemiluminescence is thought to occur as a result of the formation of singlet oxygen. The light emitted is red (635 nm), and occurs most readily in alkaline solution. This reaction is rather insensitive to low concentrations and is not suitable for the determination of hypochlorous acid in aqueous solution. However, the studies that have been reported can serve as a guide for those interested in pursuing other methods for the determination of hypochlorous acid by chemiluminescence. It is not sensitive enough to be considered as an analytical method for chlorine in water treatment.

A study has been reported that details the use of luminol for the measurement of hypochlorite ion. The optimum pH for analysis was between 9.0 and 11.0 Luminol also has been used for the determination of hydrogen peroxide. 4,5,6,7,-tetramethoxyluminol is 30 % more sensitive than luminol. Either of these compounds may be more sensitive in the determination of free chlorine. As these compounds have not been tried it appears that additional studies are necessary. From the limited data available, it appears that this reaction has considerable promise as an analytical method. It may very well be the most sensitive method to date.

It is reported that lophine, in a reaction with hypochlorite ion, produces light. Very few details were given in the study for this reaction. It appears that lophine also may be good as a chemiluminescence reaction system for free chlorine. Additional work should be undertaken to better characterize the details of this reaction.

Luminol and some of its derivatives, or lophine, may be well suited for the very sensitive measurements of chlorine species. Additional research should be undertaken to develop the use of chemiluminescence for use in the determination of chlorine in water. The potential exists for rapid, simple, and specific methods for chlorine and possibly other oxidants. With the advent of fiber optic sensors and their application in chemiluminescence methods, this technology will be important in the future.

Fluorescence.

The use of rhodamine B has been reported as a low level fluorometric method for the determination of bromine. This method is qualitatively specific for bromine, although chlorine will react to decrease the fluorescence. The advantage of this method is that it is capable of determining oxidants at very low concentrations. This method could be applied to chlorine analysis by first using the free chlorine to oxidize the bromide ion to bromine, an irreversible reaction, followed by the determination of bromine. This method was not developed fully and very little work has been undertaken since the first publication. It does appear to have considerable potential and future research in the area of methods development should not exclude additional work on this fluorometric procedure.

Other Electrode Methods.

Additional studies are required to better understand the limitations of membrane electrode methods. It appears that they may have prominent roles to play in chlorine residual measurements in the future.

In a series of experiments carried out for the determination of free chlorine in tap water, it was observed that there was a statistically significant difference between the results of the amperometric titration and the membrane electrodes. It was thought to be a problem in the membrane electrodes. However, on reconsideration, it is possible that the electrodes were actually giving a free chlorine reading and the amperometric titration was reading the sum of free and organically combined chlorine. The study was conducted on water which is relatively high in organic nitrogen. It is possible that considerable chlorine is present as organically combined chlorine and interferes in the amperometric titration procedure, but does not interfere with the membrane electrode measurements. This question must be resolved. Carefully designed experiments to expicitly resolve these differences would be most appropriate.

There have been no reports of experiments using bare-electrode amperometric analyzers where other oxidants such as chlorine dioxide, chlorite ion, chlorate ion or ozone have been tested with the bare-electrode. Additional studies are required to expand these bare-electrode amperometric studies to quantitate interferences with oxidants other than those tested, and to expand to other natural waters.

Since the accuracy of the potentiometric electrodes is affected, if temperature corrections are not used, it is recommended that temperature be either controlled or measured simultaneously. Additional independent measurements of accuracy should be undertaken for the potentiometric electrodes.

It appears that the potentiometric electrode can be used for the determination of total residual oxidant. It is suitable for continuous measurements and appears to give results that are acceptable when compared to the amperometric titrator.

General Summary and Recommendations for Chlorine.

In comparing all of the methods to the "Ideal Method" we find that none come very close to our ideal standard. Continued development of the various methods will, however, come closer and closer to the ideal.

For the present, the amperometric titration techniques will remain the laboratory standard used for the basis of comparisons of accuracy. These methods, with proper precautions can differentiate between the common inorganic chorine/chlorine ammonia species, and in general suffer from as few interferences as any of the methods.

Of the three common colorimetric procedures, DPD, LCV, and FACTS, the DPD is by far the most commonly used method. From the available literature it is clear that the DPD procedure has a number of weaknesses. In particular, the colored product is a free radical which limits the stability of the colored reaction product. The direct reaction with monochloramine, to form a product identical

to the reaction with free chlorine, is also a drawback. This problem can be reduced by the addition of chloacetamide. Liquid reagent instability precludes their use in most cases; care should be taken to determine blanks frequently.

The present LCV method that appears in Standard Methods (13) is outdated and has been substantially improved upon by Whittle and Lapteff (14). This method allows for the differentiation of the common free and combined inorganic chlorine species. However, because only one comparison study has been conducted, additional collaborative testing is recommended.

The FACTS test procedure appears to be very useful for the determination of free chlorine in the presence of relatively high concentrations of combined inorganic chlorine. A severe drawback of the FACTS test procedure is the insolubility of the syringaldazine in either 2-propanol or water. This leads to difficulties in reagent preparation, and presumably to the color stability problem encountered at the higher concentrations of chlorine (greater than 6 - 8 mg/L (as Cl_2)). Although a method for the use of the FACTS test for total chlorine has been reported, it should be tested further.

Electrode methods have been developed employing several different concepts. The membrane electrodes appear to have potential as specific methods for hypochlorous acid. Common interferences are other nonionized molecules such as chlorine dioxide and ozone. Potentiometric electrodes for the determination of total chlorine are improving in both detection limit and stability. These electrodes appear to have promise in the area of process control. Their inclusion as methods for routine use in the laboratory and field is warranted.

Both fluorescence and chemiluminescence methods also show promise for the specific determination of free chlorine at very low concentrations. Within this area of spectrofluorometric methods, there is considerable work yet to be initiated. Continued development work is warranted and recommended in this promising area.

From the review of analytical procedures for the determination of chlorine in aqueous solution, it is readily apparent that only a few of the methods are used routinely. Nevertheless, there is certain to be a continued interest in developing new and better methods of analysis. We would strongly recommend that new methods be presented in terms of the "Ideal Method" and that whenever possible, comparisons with real samples and interlaboratory comparisons be made.

Flow injection analytical techniques are becoming very common. Continued development should lead to the automation of many colorimetric and fluorometric analytical methods for the measurement of free and combined chlorine and its various species in water. With the current emphasis on automation, the methods that are to be developed and those already developed can readily exceed present standards of accuracy and precision. Automation will also lead to operator independent methods and should lead to improvements in process control and monitoring.

Chlorine Analytical Methods Comparative Studies.

The reader is cautioned against accepting the results of any or all of the above tests without some reservations. Where possible we have tried to add com-

ments, parenthetically, based upon our knowledge of the field. It is very important in reviewing data from comparison tests that the analyst be aware of the objectives of the comparison testing. For example, a test may be judged unacceptable because of an unacceptable lower limit of detection that is beyond the need for concern for other investigators.

In general when testing several test procedures it is important to identify the objective of the testing. Equally important is the use of the data. In reporting the results of the above tests, it should be kept in mind that many manufacturers of chemicals for analytical methods and Test Kits change their procedures as a result of the testing. The concerned analyst needs to determine if the results are still valid. This change is not necessarily applicable to other studies where the chemistry of an analytical method is examined. In general, the more the test studies chemistry and not merely the test procedures, the more applicable the results are for future reference.

Another area of confusion concerns precision and accuracy. An analytical method may be judged acceptable based on the precision of the results, while the same method may give poor accuracy. These statistical parameters are separate and must be tested using different experimental designs. Comparisons with the "Ideal Method" would require that both be at acceptable levels.

In general, there is a lack of comprehensive studies to better understand the chemistry associated with the individual test procedures. Investigations of this nature are necessary on a continuing basis, because of the advances in analytical instrumentation and our continued improvements in understanding the details of the underlying chemistry.

Chlorine Dioxide Analytical Methods.

The iodometric method is a questionable method even for carefully controlled research laboratory chlorine dioxide standards. In real samples where a large number of potential interferences can exist, the method is destined to produce erroneous results. Newer, more species specific methods are better choices.

Any method which determines concentrations by difference is potentially inaccurate and subject to large accumulative errors--both in terms of accuracy and precision. The subtraction of two large numbers to produce a small number means that the errors associated with those large numbers are propagated to the small number. The result in many cases is that the error is larger than the smaller number, therefore, giving meaningless information. Methods such as this, which obtain values by differences, should be avoided.

The DPD method uses the difference method in the evaluation of concentrations. The direct measurement of species by means of a more reliable and accurate method to determine chlorine dioxide is needed. The same questions raised about the DPD method for chlorine also apply here.

Ultraviolet spectrophotometry, utilizing continuous flow automated methods, has a great potential for accurate and precise measurements with the added advantage of ease of operation and high sample throughput. Flow injection analysis methods (FIA) should be carefully evaluated against existing methods for accuracy and precision. The method should be field tested and the potential

problem of membrane reliability should be evaluated for long term operations.

Additional bench studies using continuous flow methods with chemiluminescent detection must be carried out. The superior selectivity of this method needs to be utilized. Comparison lab testing and field study should be carried out.

Chlorite/Chlorate Ion Analytical Methods.

The iodometric/amperometric methods are indirect determinations of chlorite ion and cannot be recommended. The DPD method for chlorite ion can not be recommended because it is unreliable.

The iodometric sequential methods appear to be very workable on samples containing greater than 1 mg/L chlorite ion or chlorate ion with good precision and accuracy resulting. The method requires considerable operator skill and experience to obtain good precision and accuracy for samples containing less than 1 mg/L chlorite ion or chlorate ion. The method should be field tested with other methods using both high and low ratios of chlorate ion to chlorite ion. The method should be used with caution on low level samples of drinking water and/or wastewater, although direct methods requiring less specialized skills are preferred.

Interlaboratory comparisons should be carried out for the modified iodometric method for the direct analysis of chlorite ion and chlorate ion. The detailed effects of various potential interferences need to be evaluated.

The argentometric titration method is to be recommended only for relatively high concentrations of oxy-chlorine species (10-100 mg/L) but may be very useful in establishing inter-laboratory bench mark comparisons at these high concentration ranges. No such comparisons are currently available.

A highly precise, automated FIA method for low level chlorate ion needs to be developed possibly using various masking agents such as glycine, oxalic acid, malonic acid, and nitrite ion to initially remove other possible oxy-halogen interfering species. The method appears to be very promising in that it can be used to directly determine low level chlorate ion concentrations.

Difficulties With Ozone Measurements: Need For Ideal Method.

As a consequence of the nature of ozone, its continuous self-decomposition, volatility from solution, and the reaction of ozone and its decomposition products with many organic and inorganic contaminants in water, the determination of dissolved residual ozone is very difficult. A detailed knowledge of the mechanism of aqueous ozone decomposition and the potential role of the various highly reactive intermediates, is imperative in order to accurately evaluate the analytical methods (15). In this context it should be noted that most ozone methods are modifications of chlorine residual methods which determine total oxidants in the solution. Therefore, ozone decomposition products such as hydrogen peroxide and the like are also measured.

Iodometry can be used as an example of the difficulties encountered in making aqueous ozone measurements (16). Iodide ion is oxidized to iodine by ozone in an unbuffered potassium iodide solution. The pH then is adjusted to 2

with sulfuric acid and the liberated iodine is titrated with sodium thiosulfate to a starch end point. The ozone/iodine stoichiometry for this reaction has been found to range from 0.65 to 1.5. Factors affecting the stoichiometry include: pH, buffer composition, buffer concentration, iodide ion concentration, sampling techniques, and reaction time. The pH during the initial ozone/iodide ion reaction and the pH during the iodine determination have been shown to markedly alter the ozone/iodine stoichiometry. The formation of iodate ion and hydrogen peroxide have been implicated specifically as factors affecting the ozone/iodine stoichiometry (17). Modifications in the iodine determination include changes in end point detection, pH, and back-titration techniques. None of these modifications has been demonstrated to be totally satisfactory.

The biggest difficulty in interpreting the existing ozone literature is that no one method has been accepted as the Referee Method. Therefore, comparison between several different methods can create false conclusions about the accuracy of the methods. The method most often used for comparative purposes in the research laboratory is UV measurement of ozone at 260 nm. Even with this method there is apparent confusion over the molar absorptivity for aqueous ozone, with the values ranging from 2900 to 3600 $M^{-1}cm^{-1}$ (16).

All analytical methods reported, particularly those of early vintage, should be reevaluated, considering the recent information about oxidative by-products from ozone decomposition and the ozonation process itself. Some of these factors may not have been considered during development of the original analytical procedures. Certainly, more detailed information and comparisons should be available. Because of the difficulties of establishing a reliable Referee Method we propose that the existing and future methods be compared against an "Ideal Method". This "Ideal Method" would incorporate all of the characteristics that are desired for an ozone method, taking into account all other potential interferences, decomposition products, and samples originating from various sources. Finally, automation, while not an absolute necessity, can add to the selectivity and ideal nature of a method for ozone determination.

Ozone Measurement: Gas Phase.

The many uses of ozonation in the treatment of drinking water are controlled by monitoring a number of parameters. Dissolved residual ozone is only one of these parameters, and its measurement controls only disinfection conducted after filtration, but before addition of a residual disinfectant for the distribution system. However, it is very clear that the cost, efficiency, safety and improvements in design of ozone water purification systems is extremely dependent on the accurate determination of gas phase ozone. Therefore, analytical methods must be developed that will accurately measure ozone in the gas phase and residual ozone in the aqueous phase. At this point it is unrealistic to believe that one single method will be acceptable for both sample matrices.

Iodometry, UV absorption and chemiluminescence are the three most common methods employed for gas phase measurements (16). Each of these has been applied to determine the amount of ozone present in generator exit gases, when stripped from solution to the gas phase, or the amount of ozone in a contactor exhaust gas.

These techniques of monitoring concentrations in contactor exhaust gases are quite promising as a method of controlling the production of adequate quantities of ozone. This provides considerable savings in electrical energy costs for ozone generation. Direct inter-comparisons of the various gas phase measurement techniques are needed in order to evaluate accuracy.

Determination of stripped ozone in the gaseous state was reported in the 16th Edition of Standard Methods (13) for measuring ozone dissolved in water. However, in addition to the procedure being subject to the same limitations of UV absorption and chemiluminescence procedures in aqueous solution, the effects of the gas stripping process itself must be taken into consideration.

Although the iodometric stripping/aqueous absorption method has been approved in Standard Methods (13), we question the accuracy of the method. All evidence would suggest that the method is problematic. Even though the impurities are substantially left behind by the stripping, the actual procedure and the continual decomposition of ozone does introduce inaccuracies into this method. This method can be used as a relative measure of ozone for control purposes.

This basic stripping approach followed by absorption in aqueous solution (and colorimetric measurement) may deserve to be studied further. However, the biggest potential problem appears to be that at high concentrations of ozone the colorimetric compounds may react by a mechanism different from that used for residual ozone measurements. Research should be concentrated on the reagents that have already exhibited ozone selectivity.

Iodometry (Aqueous Phase).

If the performance of ozone in a specific treatment application is not dependent only on the ozone, but is instead a collective function of its reactive decomposition products as well, then iodometry can give a representative and reproducible reading of the total oxidants. For example, most European drinking water treatment plants employing ozonation as the primary disinfectant, have relied on iodometric measurements as the basis for insuring adequate disinfection, attaining a residual "ozone" level of 0.4 mg/L in the first contact chamber and maintaing this level for at least four minutes).

However, it is now abundantly clear that the 0.4 mg/L value is a measure of the amount of total oxidants present, and not necessarily ozone alone. Therefore, either the absolute level of ozone required to attain the expected degree of disinfection is lower than 0.4 mg/L over the required period of time, or some of the decomposition/oxidation products formed upon ozonation also have disinfecting properties, or both. Clearly, detailed experiments need to be carried out to demonstrate the efficacy of disinfection by the decomposition products of ozone. Similar efficacy data for ozone decomposition products could be developed for other uses of ozone (e.g., chemical oxidation) when measurement of residual ozone levels must be made to control the process. Such data would help to justify the continued use of iodometry to measure "total oxidants", rather than only ozone.

Historically, iodometry has been used as the reference method for determining ozone, and against which other analytical procedures have been

"standardized". It is now quite clear that because of its lack of selectivity, the use of iodometry should be limited to that of only a control procedure. In terms of ozonation processes, measurement for control purposes of the production rate of ozone generators and bacterial disinfection/viral inactivation may be based upon iodometry, provided the user recognizes the many limitations of the method. The reevaluation of this method must be carried out with the specific goal being to define when the method is reliable and the situations where it is not accurate.

Many authors have tactfully pointed out the many disadvantages of iodometry, leaving it to the reader to decide whether or not to use the procedure. In a detailed comparison of eight analytical methods for the determination of residual ozone it was concluded (16):

> "No iodometric method is recommended for the determination of ozone in aqueous solution because of the unreliability of the method and because of the difficulty of the comparison of results obtained with minor modifications in the iodometric method itself."

Arsenic(III) Direct Oxidation.

In the direct oxidation of arsenic(III), ozone reacts with inorganic arsenic(III) at pH 4-7, the pH is adjusted to 6.5-7 and the excess arsenic(III) species is back-titrated with standard iodine to a starch end point. Values for residual ozone determined by the arsenic direct oxidation method and by the indigo method agreed within 6% of the UV values. The primary advantages of the arsenic direct oxidation procedure are minimal interferences, good precision in the hands of experienced operators, and apparently good overall accuracy. This procedure continues to be recommended along with the indigo method. Additional comparisons of this method should be made with the indigo method under various conditions.

Syringaldazine, FACTS.

The FACTS procedure, which was developed for the selective determination of free available chlorine (hypochlorous acid + hypochlorite ion) in the presence of combined chlorine (chloramines), has been adapted for the determination of residual ozone (19). In this procedure, an aqueous solution of ozone is added to a solution of potassium iodide, and the liberated iodine is added to a 2-propanol solution of syringaldazine at pH 6.6. The resulting color is measured spectrophotometrically at 530 nm.

The FACTS procedure has the major advantage of providing a spectrophotometric procedure for the determination of ozone. However, the major limitations of the FACTS method are still those of the iodometric procedure. Due to the observed changes in slope and intercept which are problems caused by the interferences, self-decomposition of ozone, and stoichiometry, this method could be reviewed in order to fully evaluate its potential usefulness. However, considering the other colorimetric methods that are available further development of the FACTS method does not seem to give any promise of the improved selectivity that is needed.

N,N-Diethyl-p-phenylenediamine, DPD.

The DPD procedure is based on the ozone oxidation of iodide ion present in excess phosphate buffer at pH 6.4 to produce iodine, which then oxidizes the DPD cation to a pink Wurster cation which is measured spectrophotometrically, or titrated. The interferences include all oxidants capable of oxidizing iodide ion to iodine, including ozone decomposition products, halogens, and manganese oxides (20).

One advantage of the DPD method is that determinations can be made by ferrous ammonium sulfate (FAS) titrimetry, spectrophotometrically or by a color comparator. Ozone concentrations of less than or equal to 2 mg/L can be determined colorimetrically. Clearly, the procedure requires the difference of differences and is limited by the same factors which limit iodometry, specifically the presence of materials which can oxidize iodide ion to iodine.

Although evaluation of this procedure versus the standard ultraviolet and indigo procedures would seem to be necessary to make a more educated decision about the continued use or abandonment of this method, the recommendation is that other colorimetric methods are considerably more reliable than DPD. Therefore development or testing is neither recommended nor considered necessary at this time.

Indigo Trisulfonate.

The indigo method is subject to fewer interferences than most colorimetric methods and fewer interferences than all iodometric procedures (21-23). At pH 2, chlorite, chlorate, and perchlorate ions, and hydrogen peroxide do not decolorize Indigo Reagent when observed within a few hours and when the concentrations of the interferents are within a factor of 10 of that of the ozone to be determined.

Ozone decomposition products and the products of ozonolysis of organic solutes do not appear to interfere. However, chlorine, bromine, and iodine do cause some interference, as do the oxidized forms of manganese. The addition of malonic acid to the samples will mask the interference of chlorine.

For the Indigo Trisulfonate Method, it should be noted that when the ultraviolet absorption method is used to standardize the indigo method (or <u>any</u> method) for ozone, the choice of molar absorptivity is very critical. It is recommended that the equations of Hoigné continue to be used since they are based on a molar absorptivity of 2950 $M^{-1}cm^{-1}$. If and when a different value for molar absorptivity is reported and confirmed, the (calibration) equations would have to be appropriately changed. In this manner, all current measurements using the indigo method would continue to be comparable.

The advantages of the indigo procedure is that it is based on a measure of discoloration which is rapid and stoichiometric. This analytical procedure is recommended for use over any other procedure for the determination of residual ozone. Its primary attributes are its sensitivity, selectivity, accuracy, precision, speed, and simplicity of operation.

The gas diffusion flow injection analysis (GD-FIA) procedure eliminates the interference of oxidized forms of manganese, and markedly reduces the interference of chlorine (24). Other than interference of chlorine which can be reduced to zero by addition of malonic acid, there are no known interferences to the determination of ozone by this GD-FIA procedure using the indigo method.

The primary advantages of the GD-FIA procedure are its accuracy, selectivity, lack of interferences, reproducibility, and rapidity. Thus, the method is well suited for laboratory research studies and for use as an automated analytical procedure.

More studies should be conducted with specific gas-permeable membranes, particularly with respect to repeated and/or continuous exposure to ozone solutions. The use of FIA equipment in a process control environment also must be evaluated. The GD-FIA indigo procedure might well be adopted as the analytical method of choice.

o-Tolidine

The o-tolidine method (addition of 1-2 drops of o-tolidine solution to ozone-containing water to develop the yellow color) is very simple, and easily adapted to field color comparators, suitable for unskilled analysts. However, this advantage cannot compensate for the lack of quantitation of the method, nor for the carcinogenicity of the reagent (o-tolidine). The recommendation is to abandon this method.

Carmine Indigo.

The carmine indigo procedure has been used in Canadian water works plants for the past 15 years. The ozone containing water is titrated with a solution of carmine indigo until a faint blue color persists indicating that all of the ozone has been destroyed. Specific interferences are unknown, but any oxidant capable of decolorizing the carmine indigo dye most likely will interfere.

Effects of interferents should be determined, as should precision, accuracy, and effects of reagent storage and pH. The method should be studied in direct comparison with other methods, such as the indigo and UV absorption methods. Automation of this method could lead to improved selectivity for ozone.

Amperometry.

With bare electrode amperometers, either the solution or the electrode is rotated to establish a diffusion layer, and the electrical current measured is directly proportional to the concentration of dissolved oxidant (25). Commercial amperometric analyzers give satisfactory results provided there is no oxidant other than ozone present in the sample. In many situations they provide adequate monitoring of total oxidant. The bare electrode system has good sensitivity, and is applicable as a continuous nonselective monitor for ozone. When other oxidants such as chlorine, chlorine dioxide, bromine, and iodine are present, the technique has difficulties. The exact nature and magnitude of these interferences requires additional research.

Due to the accumulation of surface impurities at the electrode surfaces, all bare amperometric electrode systems are subject to loss of sensitivity with use. With uncovered electrode surfaces, fouling has been observed to be a significant problem as was the case in earlier tests with oxygen electrodes. Additionally, the response is influenced by numerous surface-active agents and also halogens and oxygen.

An improvement in the development of amperometric methods for ozone analysis has been the application of gas-permeable membranes for increasing selectivity and preventing electrode fouling (26-27). These Teflon membrane electrodes exhibit less than 2% interference (in terms of current response) from bromine, hypobromous acid, chlorine dioxide, hydrogen peroxide, nitrogen trichloride, and hypochlorous acid (26-27).

This type of amperometric membrane sensor needs to be developed further based on the exhibited selectivities. The most disturbing attribute is the temperature dependence. If different membranes could maintain selectivity while minimizing the temperature effect, this type of sensor could become highly recommended.

The application of positive voltage potentials and the use of polymeric membranes that are selectively permeable to gases has enhanced the opportunity for selective measurement of ozone. This is a very significant improvement over bare amperometric electrodes as well as most older colorimetric/spectrophotometric and titrimetric methods. With an applied voltage of +0.6 V (vs SCE) at the cathode, only the most powerful oxidizing agents can overcome the "resistance" of this anodic voltage and cause electron flow cathodically through the electrochemical circuit. This general approach should continue to be used in future electrochemical developments.

Other Electrochemical Methods.

In the differential pulse polarography procedure (DPP), a predetermined amount of phenylarsine oxide (PAO) is added in excess to an ozone solution to reduce the levels of dissolved ozone present. Excess PAO then is measured quantitatively by pulse polarography. The DPP method may under some circumstances be useful in the research laboratory. The prospects of its use in the plant or field are not as promising since a higher degree of operator skill is required.

Potentiometry involves the cathodic reduction of dissolved ozone. The diffusion-limiting current measured is proportional to the concentration of ozone in the water. Further evaluation of potentiometric systems may be in order. However, the fundamental problems of electrode fouling must be addressed. Perhaps a combination of membranes and potentiometric detection would produce a promising system for ozone determinations. The system appears to have modest potential for development.

Ultraviolet Measurements.

Ultraviolet absorption measurements also can be used for residual aqueous ozone at 258-260 nm. There is uncertainty with respect to the molar absorptivity for aqueous ozone. In the literature, values ranging from 2900 to

3600 $M^{-1}cm^{-1}$ are reported. This uncertainty in the molar absorptivity is critical to the future use and calibration uses of the UV methods. Clearly, further work to verify this value is strongly recommended.

If the molar absorptivity for ozone is known unambigiously, UV absorption is in principle an absolute method for the determination of ozone, which is not dependent upon calibration or standardization against other analytical methods. Therefore, it can be used for calibration of other analytical methods for ozone. It is specific to the determination of ozone, and is applicable to measurement in gaseous and aqueous phases.

Physical Methods.

The calorimetric method is based on the enthalpy of the catalyzed decomposition of ozone (ΔH = 144.41 KJ/mole). The calorimetric determination of ozone is calibration-independent. The technique is specific to the determination of molecular ozone, but is applicable to measurement only in the gas phase. However, the higher the concentration of ozone in the gas phase, the more accurate the method appears to be, since a greater temperature difference is observed. Potential interferents have not been reported.

The method has been shown to agree with iodometric and UV absorption procedures, particularly for the measurement of ozone in the gases exiting ozone generators. Therefore, the procedure can be used to monitor applied ozone dosages. Additional detailed interlaboratory comparisons need to be carried out.

The isothermal differential pressure procedure is based on the generation o an increased number of gas molecules during the UV destruction of ozone at constant temperature. When this reaction is carried out isothermally in a closed vessel, the increase in pressure of the contained gas is proportional to the ozone concentration. In principle, this procedure achieves a totally physical ozone measurement without requiring calibration using a chemical method. Various automated instrumental checks such as the stored molar absorptivity, the age of the UV light source, the zero point reading, measurement of the flow of the test gas and the flushing gas, and the reading of the diagnostic display are possible.

No specific comparisons are reported. However, in principle it appears that this physical method is the best candidate for calibrating the gas phase ozone instruments currently being used for ozonation control. As long as pure oxygen is used for ozone generation this method would be free of interferences and would be subject only to strict temperature control of the measurement cell. Further study of this system would be necessary before it could be recommended for further consideration.

General Summary and Recommendations for Ozone.

In comparing all the methods to the "Ideal Method" we find that none come close to our ideal standard. Continued development of the various selective methods will, however, come closer and closer to the ideal.

In terms of gas phase measurements, none of the existing methods can be recommended for accurate determinations of ozone. If a relative value of the ozone concentration is needed for control purposes, most of the methods reported could be applicable.

The accurate determination of ozone in the aqueous phase is complicated by the decomposition of ozone, its reactivity to the other species present, and the by-products of the ozonation reactions. Most current methods were developed without a clear knowledge of the associated ozone chemistry. Therefore most of the methods are unacceptable or cannot be recommended. In particular, no iodometric based chemistry is acceptable for the determination of aqueous ozone. Indigo trisulfonate and arsenic(III) direct oxidation are acceptable methods. Amperometery continues to improve -- especially as an automated control method.

The stripping techniques have some merit in terms of improved ozone selectivity. However, automated chemical systems such as flow injection analysis offer considerably more promise. The current GD-FIA indigo procedure is superior for residual ozone measurements due to its selectivity for ozone.

The most important aspect of any potential new or improved ozone analytical method will be speed of analysis and selectivity of the detection system for only ozone. As a point of comparison, we strongly recommend that all future and existing methods be compared against the "Ideal Method".

LITERATURE

1. Symons, J.M.; et al "Ozone, Chlorine Dioxide and Chloramines as Alternatives to Chlorine for Disinfection of Drinking Water" in Water Chlorination: Environmental Impact and Health Effects, Vol. 2; Jolley, R.L.; Gorchev, H. and Hamilton, D.H., Jr., Editors, (Ann Arbor, MI: Ann Arbor Science Publishers, Inc., 1979) pp. 555-560 and Complete Report entitled "State of the Art ..." (Cincinnati, OH: U.S. EPA, November, 1977), 84 pp.

2. Proceedings of Seminar on "The Design and Operation of Drinking Water Facilities Using Ozone or Chlorine Dioxide", Rice, R.G., Editor, (Dedham, MA: New England Water Works Assoc., 1979).

3. Miller, G.W.; Rice, R.G.; Robson, C.M.; Scullin, R.L.; Kühn, W. and Wolf, H., "An Assessment of Ozone and Chlorine Dioxide Technologies for Treatment of Municipal Water Supplies", U.S. Environmental Protection Agency, EPA Project Report, EPA-600/2-78/018, 1978, 571 pp.

4. Miltner, R.J. "Measurement of Chlorine Dioxide and Related Products", in Proceedings of the Water Quality Technological Conference, (Denver, CO: American Water Works Assoc., 1976), pp. 1-11.

5. Gordon, G. "Improved Methods of Analysis for Chlorate, Chlorite, and Hypochlorite Ions at the Sub-mg/L Level", U.S. Environmental Protection Agency, EPA Technical Report, EPA-600/4-85/079, October, 1985, 35 p. and Presented at AWWA WQTC, in Proc. AWWA Water Quality Technology Conference, December, Nashville, TN, 1982, pp. 175-189.

6. Aieta, E.M.; Roberts, P.V. "Chlorine Dioxide Chemistry: Generation and Residual Analysis" in Chemistry in Water Reuse, Vol. 1, Cooper, W.J., Editor (Ann Arbor, MI: Ann Arbor Science Publishers, Inc., 1981), pp. 429-452.

7. Hoigné, J.; Bader, H. "Bestimmung von Ozon und Chlordioxid in Wasser mit der Indigo-Methode" ("Determination of Ozone and Chlorine Dioxide in Water With the Indigo Method"), Vom Wasser, 1980, 55, 261-280.

8. Gilbert, E.; Hoigné, J. "Messung von Ozon in Wasserwerken; Vergleich der DPD- und Indigo-Methode" ("Ozone Measurement in Water Treatment Plants: Comparison of the DPD and Indigo Methods"), GFW-Wasser/Abwasser, 1983, 124, 527-531.

9. Schalekamp, M. "European Alternatives and Experience" in Proceedings of the National (Canadian) Conference on Critical Issues in Drinking Water Quality, (Ottawa, Ontario, Canada: Federation of Associations on Canadian Environment, 1984), pp. 140-169.

10. Ikeda, Y.; Tang, T-F.; Gordon, G. "Iodometric Method of Determination of Trace Chlorate Ion", Anal. Chem., 1984, 56, 71-73.

11. Emmenegger F.; Gordon, G. "The Rapid Interaction between Sodium Chlorite and Dissolved Chlorine", Inorg. Chem., 1967, 6, 633-635.

12. Aieta, E.M.; Berg, J.D. "A Review of Chlorine Dioxide in Drinking Water Treatment", J. Am. Water Works Assoc., 1986, 78, 62-72.

13. Standard Methods for The Examination of Water and Wastewater, 16th Edition, Greenberg, A.E.; Trussell, R.R.; Clesceri, L.S.; Franson, M.A.H., Editors (Washington, D.C.: American Public Health Assoc., 1985), 1268 pp. and 15th Edition, Greenberg, A.E.; Connors, J.J.; Jenkins, D.; Franson, M.A.H., Editors (Washington, DC: American Public Health Assoc., 1980), 1134 pp.

14. Whittle, G.P.; Lapteff, A., Jr. "New Analytical Techniques for the Study of Water Disinfection" in Chemistry of Water Supply, Treatment, and Distribution, Rubin, A.J., Editor, (Ann Arbor, MI: Ann Arbor Sci. Pub., Inc., 1974), pp. 63-88.

15. Tomiyasu, H.; Fukutomi, H.; Gordon, G. "Kinetics and Mechanism of Ozone Decomposition in Basic Aqueous Solution", Inorg. Chem., 1985, 24, 2962-2966.

16. Grunwell, J.; Benga, J.; Cohen, H., Gordon, G. "A Detailed Comparison of Analytical Methods for Residual Ozone Measurement", Ozone Sci. Eng., 1983, 5, 203-223.

17. Flamm, D.L.; Anderson, S.A. "Iodate Formation and Decomposition in Iodometric Analysis of Ozone", Environ. Sci. Technol., 1975, 9, 660-663.

18. Rehme, K.A.; Puzak, J.C.; Beard, M.E.; Smith, C.F.; Paur, R.J. "Evaluation of Ozone Calibration Procedures", U.S. Environmental Protection Agency, EPA Project Summary, EPA-600/S4-80-050, February, 1980, 277 pp.

19. Liebermann, J., Jr.; Roscher, N.M.; Meier, E.P.; Cooper, W.J. Development of the FACTS Procedure for Combined Forms of Chlorine and Ozone in Aqueous Solutions", Environ. Sci. Technol., 1980, 14, 1395-1400.

20. Palin, A.T.; Derreumaux, A. "Détermination de l'Ozone Résiduel dans l'eau" ("Determination of Ozone Residual in Water"), L'Eau et l'Industrie, 1977, 19, 57-60.

21. Bader, H.; Hoigné, J. "Colorimetric Method for the Measurement of Aqueous Ozone Based on the Decolorization of Indigo Derivatives", in Ozonization Manual for Water and Wastewater Treatment, Masschelein, W.J., Editor, (New York, NY: John Wiley & Sons, 1982), pp. 169-172.

22. Bader, H.; Hoigné, J. "Determination of Ozone in Water by the Indigo Method", Water Research 1981, 15, 449-456.

23. Bader, H.; Hoigné, J. "Determination of Ozone in Water by the Indigo Method; A Submitted Standard Method", Ozone: Science and Eng., 1982, 4, 169-176.

24. Straka, M.R.; Gordon, G.; Pacey, G.E. "Residual Aqueous Ozone Determination by Gas Diffusion Flow Injection Analysis", Anal. Chem., 1985, 57, 1799-1803.

25. Masschelein, W.J. "Continuous Amperometric Residual Ozone Analysis in the Tailfer (Brussels, Belgium) Plant", in Ozonization Manual for Water and Wastewater Treatment, Masschelein, W.J., Editor, (New York, NY: John Wiley & Sons, 1982), pp. 187-188.

26. Stanley, J.H.; Johnson, J.D. "Amperometric Membrane Electrode for Measurement of Ozone in Water", Anal. Chem., 1979, 51, 2144-2147.

27. Stanley, J.W.; Johnson, J.D. "Analysis of Ozone in Aqueous Solution", in Handbook of Ozone Technology and Applications, Vol. 1, Rice, R.G. and Netzer, A., Editors (Ann Arbor, MI: Ann Arbor Sci. Pub., Inc., 1982), pp. 255-276.

A GUIDE FOR EFFICIENT USE OF THIS REPORT (AND A BRIEF GLOSSARY OF TERMS)

This Report contains a very detailed review of all disinfectant residual measurement methods. The Executive Summary is intended to give readers a brief overview of the advantages and disadvantages of each method. To that end, Table I (Characteristics and Comparisons of Analytical Methods) has been included to summarize each of our findings and to recommend possible directions for future research. In addition, Table II (Equivalent Weights for Calculating Concentrations on the Basis of Mass) describes the equivalent weights of each of the disinfection species in terms of the actual reactions involved in the disinfection process.

Each chapter contains individual recommendations following the discussion of the method. A summary of all of the recommendations is also given at the end of each chapter. Additional help is given by means of an alphabetical Index containing more than 2500 individual terms. Specific cross referencing for all recommendations can be found in the Index either under the "recommendation", or, in terms of the subject of the numbered recommendation itself.

The term Referee Method is used to describe appropriate comparisons with existing methods and Standard Methods refers to a specifically recommended method. The Index should be an additional aid to finding the details of specific methods.

In this context, it should be noted that the individual literature citations are specific to each individual chapter -- and are either numbered individually within chapters 2 and 3, or alphabetically sequenced within chapters 4 and 5.

Chapter 4 (Indexed Reference Citations) has been included in this report in order to assist readers in locating particular papers of interest. The 48 categories for chlorine, chloramines, and the oxy-chlorine species, along with the additional 60 categories for ozone, should make the task of finding individual papers of interest considerably less cumbersome. Papers which describe several methods have been included in each of the appropriate categories. All together, the 1,400 references cited in Chapters 1-3 number more than 2,000 individual citations when distributed in the indexed form of Chapter 4.

Chapter 5 is an alphabetical listing of the individual references citations. Finally, a detailed Index has been included in order to assist readers in locating subjects of specific interest. We hope the readers will find these additional chapters as useful as have we in preparing this report.

A brief Glossary follows on the next page in order to assist readers in the various specialized terms and abbreviations used in this report. For additional terms, the reader is referred to the Index.

GLOSSARY

Accuracy -- the ability to determine the correct concentration

BAKI -- boric acid buffered potassium iodide method for ozone

Breakpoint -- the inorganic reaction of chlorine with ammonia nitrogen

CDFW -- chlorine demand free water

Combined Chlorine -- inorganic and organic chloramines

Detection Limit -- a signal that is 3 times the noise level of the system

DOC -- dissolved organic carbon

DPD -- (N,N-diethyl-p-phenylenediamine)

FACTS -- free available chlorine test with syringaldazine

FIA -- flow injection analysis, an automated analysis procedure

Free Chlorine -- the species, Cl_2 + HOCl + OCl^-

KI -- potassium iodide method for ozone

LCV -- leuco crystal violet

mL -- milliliter(s), standard unit of volume

Molar Absorptivity (ϵ) reported in units of $M^{-1}cm^{-1}$

NBKI -- neutral buffered potassium iodide method for ozone

Precision -- how well the method reproducibly measures the same concentration

Reactive Intermediate -- species such as O_2^-, HO_2^-, HO_2, OH, O_3^-, etc.

Referee Method -- the method aqainst which a working method is compared

Sensitivity -- the change in signal per unit concentration [i.e. Amps/mol]

Standard Methods -- the book, Standard Methods for the Examination of Water and Wastewater published by APHA, AWWA, and WPCF

THM's -- trihalomethanes

Total Chlorine -- the combination of Free Chlorine and Combined Chlorine

TOC -- total organic carbon

TOX -- total organic halogen

APPENDIX E

INACTIVATIONS ACHIEVED BY VARIOUS DISINFECTANTS

TABLE E-1
CT VALUES FOR INACTIVATION
OF GIARDIA CYSTS BY FREE CHLORINE
AT 0.5 C OR LOWER (1)

CHLORINE CONCENTRATION (mg/L)	pH<=6 Log Inactivations						pH=6.5 Log Inactivations						pH=7.0 Log Inactivations						pH=7.5 Log Inactivations					
	0.5	1.0	1.5	2.0	2.5	3.0	0.5	1.0	1.5	2.0	2.5	3.0	0.5	1.0	1.5	2.0	2.5	3.0	0.5	1.0	1.5	2.0	2.5	3.0
<=0.4	23	46	69	91	114	137	27	54	82	109	136	163	33	65	98	130	163	195	40	79	119	158	198	237
0.6	24	47	71	94	118	141	28	56	84	112	140	168	33	67	100	133	167	200	40	80	120	159	199	239
0.8	24	48	73	97	121	145	29	57	86	115	143	172	34	68	103	137	171	205	41	82	123	164	205	246
1	25	49	74	99	123	148	29	59	88	117	147	176	35	70	105	140	175	210	42	84	127	169	211	253
1.2	25	51	76	101	127	152	30	60	90	120	150	180	36	72	108	143	179	215	43	86	130	173	216	259
1.4	26	52	78	103	129	155	31	61	92	123	153	184	37	74	111	147	184	221	44	89	133	177	222	266
1.6	26	52	79	105	131	157	32	63	95	126	158	189	38	75	113	151	188	226	46	91	137	182	228	273
1.8	27	54	81	108	135	162	32	64	97	129	161	193	39	77	116	154	193	231	47	93	140	186	233	279
2	28	55	83	110	138	165	33	66	99	131	164	197	39	79	118	157	197	236	48	95	143	191	238	286
2.2	28	56	85	113	141	169	34	67	101	134	168	201	40	81	121	161	202	242	50	99	149	198	248	297
2.4	29	57	86	115	143	172	34	68	103	137	171	205	41	82	124	165	206	247	50	99	149	199	248	298
2.6	29	58	88	117	146	175	35	70	105	139	174	209	42	84	126	168	210	252	51	101	152	203	253	304
2.8	30	59	89	119	148	178	36	71	107	142	178	213	43	86	129	171	214	257	52	103	155	207	258	310
3	30	60	91	121	151	181	36	72	109	145	181	217	44	87	131	174	218	261	53	105	158	211	263	316

CHLORINE CONCENTRATION (mg/L)	pH=8.0 Log Inactivations						pH=8.5 Log Inactivations						pH<=9.0 Log Inactivations					
	0.5	1.0	1.5	2.0	2.5	3.0	0.5	1.0	1.5	2.0	2.5	3.0	0.5	1.0	1.5	2.0	2.5	3.0
<=0.4	46	92	139	185	231	277	55	110	165	219	274	329	65	130	195	260	325	390
0.6	48	95	143	191	238	286	57	114	171	228	285	342	68	136	204	271	339	407
0.8	49	98	148	197	246	295	59	118	177	236	295	354	70	141	211	281	352	422
1	51	101	152	203	253	304	61	122	183	243	304	365	73	146	219	291	364	437
1.2	52	104	157	209	261	313	63	125	188	251	313	376	75	150	226	301	376	451
1.4	54	107	161	214	268	321	65	129	194	258	323	387	77	155	232	309	387	464
1.6	55	110	165	219	274	329	66	132	199	265	331	397	80	159	239	318	398	477
1.8	56	113	169	225	282	338	68	136	204	271	339	407	82	163	245	326	408	489
2	58	115	173	231	288	346	70	139	209	278	348	417	83	167	250	333	417	500
2.2	59	118	177	235	294	353	71	142	213	284	355	426	85	170	256	341	426	511
2.4	60	120	181	241	301	361	73	145	218	290	363	435	87	174	261	348	435	522
2.6	61	123	184	245	307	368	74	148	222	296	370	444	89	178	267	355	444	533
2.8	63	125	188	250	313	375	75	151	226	301	377	452	91	181	272	362	453	543
3	64	127	191	255	318	382	77	153	230	307	383	460	92	184	276	368	460	552

Notes:

(1) CT = CT for 3-log inactivation
99.9

TABLE E-2
CT VALUES FOR INACTIVATION
OF GIARDIA CYSTS BY FREE CHLORINE
AT 5 C (1)

CHLORINE CONCENTRATION (mg/L)	pH<=6 Log Inactivations						pH=6.5 Log Inactivations						pH=7.0 Log Inactivations						pH=7.5 Log Inactivations					
	0.5	1.0	1.5	2.0	2.5	3.0	0.5	1.0	1.5	2.0	2.5	3.0	0.5	1.0	1.5	2.0	2.5	3.0	0.5	1.0	1.5	2.0	2.5	3.0
<=0.4	16	32	49	65	81	97	20	39	59	78	98	117	23	46	70	93	116	139	28	55	83	111	138	166
0.6	17	33	50	67	83	100	20	40	60	80	100	120	24	48	72	95	119	143	29	57	86	114	143	171
0.8	17	34	52	69	86	103	20	41	61	81	102	122	24	49	73	97	122	146	29	58	88	117	146	175
1	18	35	53	70	88	105	21	42	63	83	104	125	25	50	75	99	124	149	30	60	90	119	149	179
1.2	18	36	54	71	89	107	21	42	64	85	106	127	25	51	76	101	127	152	31	61	92	122	153	183
1.4	18	36	55	73	91	109	22	43	65	87	108	130	26	52	78	103	129	155	31	62	94	125	156	187
1.6	19	37	56	74	93	111	22	44	66	88	110	132	26	53	79	105	132	158	32	64	96	128	160	192
1.8	19	38	57	76	95	114	23	45	68	90	113	135	27	54	81	108	135	162	33	65	98	131	163	196
2	19	39	58	77	97	116	23	46	69	92	115	138	28	55	83	110	138	165	33	67	100	133	167	200
2.2	20	39	59	79	98	118	23	47	70	93	117	140	28	56	85	113	141	169	34	68	102	136	170	204
2.4	20	40	60	80	100	120	24	48	72	95	119	143	29	57	86	115	143	172	35	70	105	139	174	209
2.6	20	41	61	81	102	122	24	49	73	97	122	146	29	58	88	117	146	175	36	71	107	142	178	213
2.8	21	41	62	83	103	124	25	49	74	99	123	148	30	59	89	119	148	178	36	72	109	145	181	217
3	21	42	63	84	105	126	25	50	76	101	126	151	30	61	91	121	152	182	37	74	111	147	184	221
CHLORINE CONCENTRATION (mg/L)	pH=8.0 Log Inactivations						pH=8.5 Log Inactivations						pH<=9.0 Log Inactivations											
	0.5	1.0	1.5	2.0	2.5	3.0	0.5	1.0	1.5	2.0	2.5	3.0	0.5	1.0	1.5	2.0	2.5	3.0						
<=0.4	33	66	99	132	165	198	39	79	118	157	197	236	47	93	140	186	233	279						
0.6	34	68	102	136	170	204	41	81	122	163	203	244	49	97	146	194	243	291						
0.8	35	70	105	140	175	210	42	84	126	168	210	252	50	100	151	201	251	301						
1	36	72	108	144	180	216	43	87	130	173	217	260	52	104	156	208	260	312						
1.2	37	74	111	147	184	221	45	89	134	178	223	267	53	107	160	213	267	320						
1.4	38	76	114	151	189	227	46	91	137	183	228	274	55	110	165	219	274	329						
1.6	39	77	116	155	193	232	47	94	141	187	234	281	56	112	169	225	281	337						
1.8	40	79	119	159	198	238	48	96	144	191	239	287	58	115	173	230	288	345						
2	41	81	122	162	203	243	49	98	147	196	245	294	59	118	177	235	294	353						
2.2	41	83	124	165	207	248	50	100	150	200	250	300	60	120	181	241	301	361						
2.4	42	84	127	169	211	253	51	102	153	204	255	306	61	123	184	245	307	368						
2.6	43	86	129	172	215	258	52	104	156	208	260	312	63	125	188	250	313	375						
2.8	44	88	132	175	219	263	53	106	159	212	265	318	64	127	191	255	318	382						
3	45	89	134	179	223	268	54	108	162	216	270	324	65	130	195	259	324	389						

Notes:

(1) $CT_{99.9}$ = CT for 3-log inactivation

TABLE E-3
CT VALUES FOR INACTIVATION
OF GIARDIA CYSTS BY FREE CHLORINE
AT 10 C (1)

CHLORINE CONCENTRATION (mg/L)	pH<=6 Log Inactivations						pH=6.5 Log Inactivations						pH=7.0 Log Inactivations						pH=7.5 Log Inactivations					
	0.5	1.0	1.5	2.0	2.5	3.0	0.5	1.0	1.5	2.0	2.5	3.0	0.5	1.0	1.5	2.0	2.5	3.0	0.5	1.0	1.5	2.0	2.5	3.0
<=0.4	12	24	37	49	61	73	15	29	44	59	73	88	17	35	52	69	87	104	21	42	63	83	104	125
0.6	13	25	38	50	63	75	15	30	45	60	75	90	18	36	54	71	89	107	21	43	64	85	107	128
0.8	13	26	39	52	65	78	15	31	46	61	77	92	18	37	55	73	92	110	22	44	66	87	109	131
1	13	26	40	53	66	79	16	31	47	63	78	94	19	37	56	75	93	112	22	45	67	89	112	134
1.2	13	27	40	53	67	80	16	32	48	63	79	95	19	38	57	76	95	114	23	46	69	91	114	137
1.4	14	27	41	55	68	82	16	33	49	65	82	98	19	39	58	77	97	116	23	47	70	93	117	140
1.6	14	28	42	55	69	83	17	33	50	66	83	99	20	40	60	79	99	119	24	48	72	96	120	144
1.8	14	29	43	57	72	86	17	34	51	67	84	101	20	41	61	81	102	122	25	49	74	98	123	147
2	15	29	44	58	73	87	17	35	52	69	87	104	21	41	62	83	103	124	25	50	75	100	125	150
2.2	15	30	45	59	74	89	18	35	53	70	88	105	21	42	64	85	106	127	26	51	77	102	128	153
2.4	15	30	45	60	75	90	18	36	54	71	89	107	22	43	65	86	108	129	26	52	79	105	131	157
2.6	15	31	46	61	77	92	18	37	55	73	92	110	22	44	66	87	109	131	27	53	80	107	133	160
2.8	16	31	47	62	78	93	19	37	56	74	93	111	22	45	67	89	112	134	27	54	82	109	136	163
3	16	32	48	63	79	95	19	38	57	75	94	113	23	46	69	91	114	137	28	55	83	111	138	166
CHLORINE CONCENTRATION (mg/L)	pH=8.0 Log Inactivations						pH=8.5 Log Inactivations						pH<=9.0 Log Inactivations											
	0.5	1.0	1.5	2.0	2.5	3.0	0.5	1.0	1.5	2.0	2.5	3.0	0.5	1.0	1.5	2.0	2.5	3.0						
<=0.4	25	50	75	99	124	149	30	59	89	118	148	177	35	70	105	139	174	209						
0.6	26	51	77	102	128	153	31	61	92	122	153	183	36	73	109	145	182	218						
0.8	26	53	79	105	132	158	32	63	95	126	158	189	38	75	113	151	188	226						
1	27	54	81	108	135	162	33	65	98	130	163	195	39	78	117	156	195	234						
1.2	28	55	83	111	138	166	33	67	100	133	167	200	40	80	120	160	200	240						
1.4	28	57	85	113	142	170	34	69	103	137	172	206	41	82	124	165	206	247						
1.6	29	58	87	116	145	174	35	70	106	141	176	211	42	84	127	169	211	253						
1.8	30	60	90	119	149	179	36	72	108	143	179	215	43	86	130	173	216	259						
2	30	61	91	121	152	182	37	74	111	147	184	221	44	88	133	177	221	265						
2.2	31	62	93	124	155	186	38	75	113	150	188	225	45	90	136	181	226	271						
2.4	32	63	95	127	158	190	38	77	115	153	192	230	46	92	138	184	230	276						
2.6	32	65	97	129	162	194	39	78	117	156	195	234	47	94	141	187	234	281						
2.8	33	66	99	131	164	197	40	80	120	159	199	239	48	96	144	191	239	287						
3	34	67	101	134	168	201	41	81	122	162	203	243	49	97	146	195	243	292						

Notes:

(1) $CT_{99.9}$ = CT for 3-log inactivation

TABLE E-4
CT VALUES FOR INACTIVATION
OF GIARDIA CYSTS BY FREE CHLORINE
AT 15 C (1)

CHLORINE CONCENTRATION (mg/L)	pH<=6 Log Inactivations						pH=6.5 Log Inactivations						pH=7.0 Log Inactivations						pH=7.5 Log Inactivations					
	0.5	1.0	1.5	2.0	2.5	3.0	0.5	1.0	1.5	2.0	2.5	3.0	0.5	1.0	1.5	2.0	2.5	3.0	0.5	1.0	1.5	2.0	2.5	3.0
<=0.4	8	16	25	33	41	49	10	20	30	39	49	59	12	23	35	47	58	70	14	28	42	55	69	83
0.6	8	17	25	33	42	50	10	20	30	40	50	60	12	24	36	48	60	72	14	29	43	57	72	86
0.8	9	17	26	35	43	52	10	20	31	41	51	61	12	24	37	49	61	73	15	29	44	59	73	88
1	9	18	27	35	44	53	11	21	32	42	53	63	13	25	38	50	63	75	15	30	45	60	75	90
1.2	9	18	27	36	45	54	11	21	32	43	53	64	13	25	38	51	63	76	15	31	46	61	77	92
1.4	9	18	28	37	46	55	11	22	33	43	54	65	13	26	39	52	65	78	16	31	47	63	78	94
1.6	9	19	28	37	47	56	11	22	33	44	55	66	13	26	40	53	66	79	16	32	48	64	80	96
1.8	10	19	29	38	48	57	11	23	34	45	57	68	14	27	41	54	68	81	16	33	49	65	82	98
2	10	19	29	39	48	58	12	23	35	46	58	69	14	28	42	55	69	83	17	33	50	67	83	100
2.2	10	20	30	39	49	59	12	23	35	47	58	70	14	28	43	57	71	85	17	34	51	68	85	102
2.4	10	20	30	40	50	60	12	24	36	48	60	72	14	29	43	57	72	86	18	35	53	70	88	105
2.6	10	20	31	41	51	61	12	24	37	49	61	73	15	29	44	59	73	88	18	36	54	71	89	107
2.8	10	21	31	41	52	62	12	25	37	49	62	74	15	30	45	59	74	89	18	36	55	73	91	109
3	11	21	32	42	53	63	13	25	38	51	63	76	15	30	46	61	76	91	19	37	56	74	93	111

CHLORINE CONCENTRATION (mg/L)	pH=8.0 Log Inactivations						pH=8.5 Log Inactivations						pH<=9.0 Log Inactivations					
	0.5	1.0	1.5	2.0	2.5	3.0	0.5	1.0	1.5	2.0	2.5	3.0	0.5	1.0	1.5	2.0	2.5	3.0
<=0.4	17	33	50	66	83	99	20	39	59	79	98	118	23	47	70	93	117	140
0.6	17	34	51	68	85	102	20	41	61	81	102	122	24	49	73	97	122	146
0.8	18	35	53	70	88	105	21	42	63	84	105	126	25	50	76	101	126	151
1	18	36	54	72	90	108	22	43	65	87	108	130	26	52	78	104	130	156
1.2	19	37	56	74	93	111	22	45	67	89	112	134	27	53	80	107	133	160
1.4	19	38	57	76	95	114	23	46	69	91	114	137	28	55	83	110	138	165
1.6	19	39	58	77	97	116	24	47	71	94	118	141	28	56	85	113	141	169
1.8	20	40	60	79	99	119	24	48	72	96	120	144	29	58	87	115	144	173
2	20	41	61	81	102	122	25	49	74	98	123	147	30	59	89	118	148	177
2.2	21	41	62	83	103	124	25	50	75	100	125	150	30	60	91	121	151	181
2.4	21	42	64	85	106	127	26	51	77	102	128	153	31	61	92	123	153	184
2.6	22	43	65	86	108	129	26	52	78	104	130	156	31	63	94	125	157	188
2.8	22	44	66	88	110	132	27	53	80	106	133	159	32	64	96	127	159	191
3	22	45	67	89	112	134	27	54	81	108	135	162	33	65	98	130	163	195

Notes:

(1) $CT_{99.9}$ = CT for 3-log inactivation

TABLE E-5
CT VALUES FOR INACTIVATION
OF GIARDIA CYSTS BY FREE CHLORINE
AT 20 C (1)

CHLORINE CONCENTRATION (mg/L)	pH<=6 Log Inactivations						pH=6.5 Log Inactivations						pH=7.0 Log Inactivations						pH=7.5 Log Inactivations					
	0.5	1.0	1.5	2.0	2.5	3.0	0.5	1.0	1.5	2.0	2.5	3.0	0.5	1.0	1.5	2.0	2.5	3.0	0.5	1.0	1.5	2.0	2.5	3.0
<=0.4	6	12	18	24	30	36	7	15	22	29	37	44	9	17	26	35	43	52	10	21	31	41	52	62
0.6	6	13	19	25	32	38	8	15	23	30	38	45	9	18	27	36	45	54	11	21	32	43	53	64
0.8	7	13	20	26	33	39	8	15	23	31	38	46	9	18	28	37	46	55	11	22	33	44	55	66
1	7	13	20	26	33	39	8	16	24	31	39	47	9	19	28	37	47	56	11	22	34	45	56	67
1.2	7	13	20	27	33	40	8	16	24	32	40	48	10	19	29	38	48	57	12	23	35	46	58	69
1.4	7	14	21	27	34	41	8	16	25	33	41	49	10	19	29	39	48	58	12	23	35	47	58	70
1.6	7	14	21	28	35	42	8	17	25	33	42	50	10	20	30	39	49	59	12	24	36	48	60	72
1.8	7	14	22	29	36	43	9	17	26	34	43	51	10	20	31	41	51	61	12	25	37	49	62	74
2	7	15	22	29	37	44	9	17	26	35	43	52	10	21	31	41	52	62	13	25	38	50	63	75
2.2	7	15	22	29	37	44	9	18	27	35	44	53	11	21	32	42	53	63	13	26	39	51	64	77
2.4	8	15	23	30	38	45	9	18	27	36	45	54	11	22	33	43	54	65	13	26	39	52	65	78
2.6	8	15	23	31	38	46	9	18	28	37	46	55	11	22	33	44	55	66	13	27	40	53	67	80
2.8	8	16	24	31	39	47	9	19	28	37	47	56	11	22	34	45	56	67	14	27	41	54	68	81
3	8	16	24	31	39	47	10	19	29	38	48	57	11	23	34	45	57	68	14	28	42	55	69	83
CHLORINE CONCENTRATION (mg/L)	pH=8.0 Log Inactivations						pH=8.5 Log Inactivations						pH<=9.0 Log Inactivations											
	0.5	1.0	1.5	2.0	2.5	3.0	0.5	1.0	1.5	2.0	2.5	3.0	0.5	1.0	1.5	2.0	2.5	3.0						
<=0.4	12	25	37	49	62	74	15	30	45	59	74	89	18	35	53	70	88	105						
0.6	13	26	39	51	64	77	15	31	46	61	77	92	18	36	55	73	91	109						
0.8	13	26	40	53	66	79	16	32	48	63	79	95	19	38	57	75	94	113						
1	14	27	41	54	68	81	16	33	49	65	82	98	20	39	59	78	98	117						
1.2	14	28	42	55	69	83	17	33	50	67	83	100	20	40	60	80	100	120						
1.4	14	28	43	57	71	85	17	34	52	69	86	103	21	41	62	82	103	123						
1.6	15	29	44	58	73	87	18	35	53	70	88	105	21	42	63	84	105	126						
1.8	15	30	45	59	74	89	18	36	54	72	90	108	22	43	65	86	108	129						
2	15	30	46	61	76	91	18	37	55	73	92	110	22	44	66	88	110	132						
2.2	16	31	47	62	78	93	19	38	57	75	94	113	23	45	68	90	113	135						
2.4	16	32	48	63	79	95	19	38	58	77	96	115	23	46	69	92	115	138						
2.6	16	32	49	65	81	97	20	39	59	78	98	117	24	47	71	94	118	141						
2.8	17	33	50	66	83	99	20	40	60	79	99	119	24	48	72	95	119	143						
3	17	34	51	67	84	101	20	41	61	81	102	122	24	49	73	97	122	146						

Notes:

(1) $CT_{99.9}$ = CT for 3-log inactivation

TABLE E-6
CT VALUES FOR INACTIVATION
OF GIARDIA CYSTS BY FREE CHLORINE
AT 25 C (1)

CHLORINE CONCENTRATION (mg/L)	pH<=6 Log Inactivations						pH=6.5 Log Inactivations						pH=7.0 Log Inactivations						pH=7.5 Log Inactivations					
	0.5	1.0	1.5	2.0	2.5	3.0	0.5	1.0	1.5	2.0	2.5	3.0	0.5	1.0	1.5	2.0	2.5	3.0	0.5	1.0	1.5	2.0	2.5	3.0
<=0.4	4	8	12	16	20	24	5	10	15	19	24	29	6	12	18	23	29	35	7	14	21	28	35	42
0.6	4	8	13	17	21	25	5	10	15	20	25	30	6	12	18	24	30	36	7	14	22	29	36	43
0.8	4	9	13	17	22	26	5	10	16	21	26	31	6	12	19	25	31	37	7	15	22	29	37	44
1	4	9	13	17	22	26	5	10	16	21	26	31	6	12	19	25	31	37	8	15	23	30	38	45
1.2	5	9	14	18	23	27	5	11	16	21	27	32	6	13	19	25	32	38	8	15	23	31	38	46
1.4	5	9	14	18	23	27	6	11	17	22	28	33	7	13	20	26	33	39	8	16	24	31	39	47
1.6	5	9	14	19	23	28	6	11	17	22	28	33	7	13	20	27	33	40	8	16	24	32	40	48
1.8	5	10	15	19	24	29	6	11	17	23	28	34	7	14	21	27	34	41	8	16	25	33	41	49
2	5	10	15	19	24	29	6	12	18	23	29	35	7	14	21	27	34	41	8	17	25	33	42	50
2.2	5	10	15	20	25	30	6	12	18	23	29	35	7	14	21	28	35	42	9	17	26	34	43	51
2.4	5	10	15	20	25	30	6	12	18	24	30	36	7	14	22	29	36	43	9	17	26	35	43	52
2.6	5	10	16	21	26	31	6	12	19	25	31	37	7	15	22	29	37	44	9	18	27	35	44	53
2.8	5	10	16	21	26	31	6	12	19	25	31	37	8	15	23	30	38	45	9	18	27	36	45	54
3	5	11	16	21	27	32	6	13	19	25	32	38	8	15	23	31	38	46	9	18	28	37	46	55
CHLORINE CONCENTRATION (mg/L)	pH=8.0 Log Inactivations						pH=8.5 Log Inactivations						pH<=9.0 Log Inactivations											
	0.5	1.0	1.5	2.0	2.5	3.0	0.5	1.0	1.5	2.0	2.5	3.0	0.5	1.0	1.5	2.0	2.5	3.0						
<=0.4	8	17	25	33	42	50	10	20	30	39	49	59	12	23	35	47	58	70						
0.6	9	17	26	34	43	51	10	20	31	41	51	61	12	24	37	49	61	73						
0.8	9	18	27	35	44	53	11	21	32	42	53	63	13	25	38	50	63	75						
1	9	18	27	36	45	54	11	22	33	43	54	65	13	26	39	52	65	78						
1.2	9	18	28	37	46	55	11	22	34	45	56	67	13	27	40	53	67	80						
1.4	10	19	29	38	48	57	12	23	35	46	58	69	14	27	41	55	68	82						
1.6	10	19	29	39	48	58	12	23	35	47	58	70	14	28	42	56	70	84						
1.8	10	20	30	40	50	60	12	24	36	48	60	72	14	29	43	57	72	86						
2	10	20	31	41	51	61	12	25	37	49	62	74	15	29	44	59	73	88						
2.2	10	21	31	41	52	62	13	25	38	50	63	75	15	30	45	60	75	90						
2.4	11	21	32	42	53	63	13	26	39	51	64	77	15	31	46	61	77	92						
2.6	11	22	33	43	54	65	13	26	39	52	65	78	16	31	47	63	78	94						
2.8	11	22	33	44	55	66	13	27	40	53	67	80	16	32	48	64	80	96						
3	11	22	34	45	56	67	14	27	41	54	68	81	16	32	49	65	81	97						

Notes:

(1) $CT_{99.9}$ = CT for 3-log inactivation

TABLE E-7

CT VALUES FOR INACTIVATION OF VIRUSES BY FREE CHLORINE[1]

	Log Inactivation					
	2.0 pH		3.0 pH		4.0 pH	
Temperature (C)	6-9	10	6-9	10	6-9	10
0.5	6	45	9	66	12	90
5	4	30	6	44	8	60
10	3	22	4	33	6	45
15	2	15	3	22	4	30
20	1	11	2	16	3	22
25	1	7	1	11	2	15

Notes:

1. Basis for values given in Appendix F.

TABLE E-8

CT VALUES FOR INACTIVATION OF GIARDIA CYSTS BY CHLORINE DIOXIDE[1]

	Temperature (C)					
Inactivation	<=1	5	10	15	20	25
0.5-log	10	4.3	4	3.2	2.5	2
1-log	21	8.7	7.7	6.3	5	3.7
1.5-log	32	13	12	10	7.5	5.5
2-log	42	17	15	13	10	7.3
2.5-log	52	22	19	16	13	9
3-log	63	26	23	19	15	11

Note:

1. Basis for values given in Appendix F.

TABLE E-9

CT VALUES FOR INACTIVATION OF VIRUSES BY CHLORINE DIOXIDE pH 6-9[1]

Removal	Temperature (C)					
	≤1	5	10	15	20	25
2-log	8.4	5.6	4.2	2.8	2.1	1.4
3-log	25.6	17.1	12.8	8.6	6.4	4.3
4-log	50.1	33.4	25.1	16.7	12.5	8.4

Notes:

1. Basis for values given in Appendix F.

TABLE E-10

CT VALUES FOR INACTIVATION OF GIARDIA CYSTS BY OZONE[1]

Inactivation	Temperature (C)					
	≤1	5	10	15	20	25
0.5-log	0.48	0.32	0.23	0.16	0.12	0.08
1-log	0.97	0.63	0.48	0.32	0.24	0.16
1.5-log	1.5	0.95	0.72	0.48	0.36	0.24
2-log	1.9	1.3	0.95	0.63	0.48	0.32
2.5-log	2.4	1.6	1.2	0.79	0.60	0.40
3-log	2.9	1.9	1.43	0.95	0.72	0.48

Note:

1. Basis for values given in Appendix F.

TABLE E-11

CT VALUES FOR
INACTIVATION OF VIRUSES BY OZONE[1]

Inactivation	Temperature (C)					
	<=1	5	10	15	20	25
2-log	0.9	0.6	0.5	0.3	0.25	0.15
3-log	1.4	0.9	0.8	0.5	0.4	0.25
4-log	1.8	1.2	1.0	0.6	0.5	0.3

Note:

1. Basis for values given in Appendix F.

TABLE E-12

CT VALUES FOR
INACTIVATION OF GIARDIA CYSTS
BY CHLORAMINE pH 6-9[1]

Inactivation	Temperature (C)					
	<=1	5	10	15	20	25
0.5-log	635	365	310	250	185	125
1-log	1,270	735	615	500	370	250
1.5-log	1,900	1,100	930	750	550	375
2-log	2,535	1,470	1,230	1,000	735	500
2.5-log	3,170	1,830	1,540	1,250	915	625
3-log	3,800	2,200	1,850	1,500	1,100	750

Note:

1. Basis for values given in Appendix F.

TABLE E-13

CT VALUES FOR
INACTIVATION OF VIRUSES BY CHLORAMINE[1]

Inactivation	Temperature (C)					
	<=1	5	10	15	20	25
2-log	1,243	857	643	428	321	214
3-log	2,063	1,423	1,067	712	534	356
4-log	2,883	1,988	1,491	994	746	497

Notes:

1. Basis for values given in Appendix F.

TABLE E-14

CT VALUES FOR
INACTIVATION OF VIRUSES BY UV[1]

Log Inactivation	
2.0	3.0
21	36

Note:

1. Basis for values given in Appendix F.

APPENDIX F

BASIS FOR CT VALUES

APPENDIX F
BASIS OF CT VALUES

F.1 Inactivation of *Giardia* Cysts

F.1.1 Free Chlorine

The CT values for free chlorine in Tables E-1 through E-6 are based on a statistical analysis (Clark et al., 1988; attached to this appendix), which considered both animal infectivity studies (Hibler et al., 1987) and excystation studies (Jarroll et al., 1981; Rice et al., 1982; Rubin et al., 1988). A multiplicative model was selected to best represent the chemical reactions during the inactivation process. This model was applied to each of the data sets, listed above, and in various combinations. The animal infectivity data were included in all combinations studied. The animal infectivity data was considered essential for inclusion in all the analysis of combined data sets because it included many more data points than the other data sets, all of which represented inactivation levels at 99.99 percent. Because of limitations with the excystation methodology, only data for achieving less than 99.9 percent inactivation was available from such studies.

Statistical analysis supported the choice of combining the Hibler et al. and the Jarroll et al. data (and excluding the Rice et al. (1981) and Rubin et al. (1987) data), to form the best fit model for predicting CT values for different levels of inactivation. As a conservative regulatory strategy, Clark and Regli (1990) (attached at the end of thsi appendix), recommended that CT values for different levels of inactivation be determined by applying first order kinetics to the 99 percent upper confidence interval of the $CT_{99.99}$ values predicted by the model.

The model was applied using the above strategy as a safety factor, to determine the CT values ranging from 0.5-log to 3-log inactivation at 0.5 and 5 C. CT values for temperatures above 5 C were estimated assuming a twofold decrease for every 10 C. CT values for temperatures at 0.5 C were estimated assuming a 1.5 times increase to CT values at 5 C. This general principle is supported by Hoff (1986). It is important to note that the CT values for free chlorine are sensitive to the residual

concentration, C. For example, at a pH of 7 and a temperature of 10 C, a 3-log Giardia cyst inactivation results from a CT of 107 mg/L-min with a free residual of 0.6 g/L and a CT of 124 mg/L-min with a free residual of 2.0 mg/L.

Application of the model to pHs above 8, up to 9, was considered reasonable because the model is substantially sensitive to pH (e.g., CTs at pH 9 are over three times greater than CTs at pH 6 and over two times greater than CTs at pH 7). At a pH of 9, approximately four percent of the hypochlorous acid fraction of free chlorine is still present. Recent data indicate that in terms of HOCl residuals (versus total free chlorine residuals including HOCl and OCl^-) the CT products required for inactivation of Giardia muris and Giardia lamblia cysts decrease with increasing pH from 7 to 9 (Leahy et al., 1987; Rubin et al., 1988b). However, with increasing pH, the fraction of free chlorine existing as the weaker oxidant species (OCl^-) increases. In terms of total free chlorine residuals (i.e., HOCl and OCl^-) the CT products required for inactivation of Giardia muris cysts increase with increasing pH from 7 to 9 by less than a factor of 2 at concentrations of less than 5.0 mg/L (see Table F-1). Also, the significance of pH on the value of CT products achieving 99 percent inactivation appears to decrease with decreasing temperature and free chlorine concentration. The relative effects of pH, temperature, and chlorine concentration, on inactivation of Giardia muris cysts appears to be the same for Giardia lamblia cysts (Rubin et al., 1988b), although not as much data for Giardia lamblia cysts for high pH and temperature values as for Giardia muris cysts is yet available.

F.1.2 Ozone and Chlorine Dioxide

The CT values for ozone in Table E-10 are based on disinfection studies using in vitro excystation of Giardia lamblia (Wickramanayake, G. B., et al., 1985). CT_{99} values at 5 C and pH 7 for ozone ranged from 0.46 to 0.64 (disinfectant concentrations ranging from 0.11 to 0.48 mg/L). No CT values were available for other pHs. The highest CT_{99} value, 0.64, was used as a basis for extrapolation to obtain the CT values at 5 C, assuming first order kinetics and applying a safety factor of 2, e.g., (0.64 X 3/2 X 2 = 1.9). CT values for temperatures

TABLE F-1

CT VALUES TO ACHIEVE 99 PERCENT
INACTIVATION OF GIARDIA MURIS CYSTS BY FREE CHLORINE
(Source: Rubin, et al., 1988b)

pH	Temperature (C)	Concentration (mg/L) 0.2-0.5	0.5-1.0	1.0-2.0	2.0-5.0
7	1	500	760	1,460	1,200
	15	200	290	360	290
8	1	510	820	1,580	1,300
	15		220		320
9	1	440	1,100	1,300	2,200
	15	310	420	620	760

above 5 C were estimated assuming a twofold decrease for every 10 C. CT values for temperatures at 0.5 C were estimated assuming a 1.5 times increase to CT values at 5 C.

The CT values for chlorine dioxide in Table E-8 are based on disinfection studies using in vitro excystation of Giardia muris CT_{99} values at pH 7 and 1 C, 5 C, 15 C and 25 C (Leahy, 1985 and Rubin, 1988b). The average CT_{99} value at each temperature (27.9 at 1 C, 11.8 at 5 C, 8.5 at 15 C, and 4.7 at 25 C) was extrapolated using first order kinetics and multiplied by a safety factor of 1.5 to obtain the $CT_{99.9}$ values, e.g.,

$$\text{at 1 C, } C_{99.9} = 27.9 \times 1.5 \times 1.5 = 63.$$

Because of the limited data available at pHs other than pH 7, the same CT values are specified for all pHs. Although most of the CT_{99} data were determined at pH 7, it is known that chlorine dioxide is more effective at pH 9. Thus, the CT values in the rule are more conservative for higher pHs than for lower pHs.

A lower safety factor is used for chlorine dioxide than for ozone, because the data was generated using Giardia muris cysts which are more resistant than Giardia lamblia cysts. CT values at other temperatures were estimated, based on the same rule of thumb multipliers assumed for ozone.

A larger safety factor was applied to the ozone and chlorine dioxide data than to the chlorine data because:

a. Less data were available for ozone and chlorine dioxide than for chlorine;

b. Data available for ozone and chlorine dioxide, because of the limitations of the excystation procedure, only reflected up to or slightly beyond 99 percent inactivation. Data for chlorine, based on animal infectivity studies rather than excystation procedures, reflected inactivation of 99.99 percent. Extrapolation of data to achieve CT values for 99.9 percent inactivation with ozone and chlorine dioxide, involved greater uncertainty than the direct determination of CT values for 99.9 percent inactivation using chlorine.

c. The CT values for ozone and chlorine dioxide to achieve 99.9 percent inactivation are feasible to achieve; and

d. Use of ozone and chlorine dioxide is likely to occur within the plant rather than in the distribution system (versus chlorine and chloramines which are the likely disinfectants

for use in the distribution system). Contact time measurements within the plant will involve greater uncertainty than measurement of contact time in pipelines.

EPA recognizes that the CT values for ozone and chlorine dioxide are based on limited data. Therefore, EPA encourages the generation of additional data in accordance with the protocols provided in Appendix G to determine conditions other than the specified CT values, for providing effective disinfection at a particular system.

F.1.3 Chloramines

The CT values for chloramines in Table E-12 are based on disinfection studies using preformed chloramines and in vitro excystation of Giardia muris (Rubin, 1988). Table F-2 summarizes CT values for achieving 99 percent inactivation of Giardia muris cysts. The highest CT values for achieving 99 percent inactivation at 1 C (2,500) and 5 C (1,430) were each multiplied by 1.5 (i.e., first order kinetics were assumed) to estimate the $CT_{99.9}$ values at 0.5 C and 5 C, respectively, in Table E-12. The CT_{99} value of 970 at 15 C was multiplied by 1.5 to estimate the $CT_{99.9}$ value. The highest CT_{99} value of 1,500 at 15 C and pH 6 was not used because it appeared anomalous to the other data. Interesting to note is that among the data in Table F-2 the CT values in the lower residual concentration range (<2 mg/L) are higher than those in the higher residual concentration range (2-10 mg/L). This is opposite to the relationship between these variables for free chlorine. For chloramines, residual concentration may have greater influence than contact time on the inactivation of Giardia cysts within the range of chloramine residual concentrations practiced by water utilities (less than 10 mg/L). No safety factor was applied to these data since chloramination, conducted in the field, is more effective than using preformed chloramines. Also, Giardia muris appears to be more resistant than Giardia lamblia to chloramines (Rubin, 1988b).

The protocol in Appendix G can be used to demonstrate if less stringent disinfection conditions than those cited in Table E-12 can achieve comparable levels of inactivation for specific system characteristics.

TABLE F-2

CT VALUES FOR 99 PERCENT
INACTIVATION OF GIARDIA MURIS CYSTS BY MONOCHLORAMINE*
(Source: Rubin, 1988)

pH	Temperature (C)	Monochloramine Concentration (mg/L) ≤0.2	2.0-10.0
6	15	1,500	880
	5	>1,500	>880
	1	>1,500	>880
7	15	>970	970
	5	>970	1,400
	1	2,500	>1,400
8	15	1,000	530
	5	>1,000	1,430
	1	>1,000	1,880
9	15	890	560
	5	>890	>560
	1	>890	>560

*CT values with ">" signs are extrapolated from the known data.

F.2 Inactivation of Viruses

F.2.1 Free Chlorine

CT values for free chlorine are based on data by Sobsey (1988) for inactivation of Hepatitus A virus (HAV), Strain HM175, at pH 6,7,8,9 and 10, chlorine concentrations of 0.5 to 0.2, and a temperature of 5 C, as contained in Table F-3. The highest CT value for the pH range 6-9 for achieving 2, 3, and 4-log inactivation of HAV were multiplied by a safety factor of 3 to obtain the CT values listed in Table E-7. (e.g., the CT value for achieving 4-log inactivation at pHs 6-9 was determined by multiplying 2.55 X 3 = 7.6 = 8). The CT values at pH 10 were significantly higher than those for pHs 6-9 and are considered separately. The CT values in Table E-7 for pH 10 also include a safety factor of 3. CT values at temperatures other than 5 C were determined assuming a two fold decrease for every 10 C increase. CT values for inactivating viruses in general are based on HAV data since they give higher CT values than those for inactivation of polio and rotaviruses under similar conditions of pH and temperature (Hoff, 1986).

F.2.2 Chlorine Dioxide

Data by Sobsey (1988) for inactivation of Hepatitus A virus, strain HM 175, by a chlorine dioxide concentration of 0.5 mg/l at pH 6 and 5 C is shown in Table F-4. The CT values in Table E-9 for pHs 6-9 and temperature = 5 C were determined by applying a safety factor of 2 to the average CT values presented in Table F-4 at pH 6. This safety factor is lower than that used to determine CT values for chlorine because chlorine dioxide appears to be significantly more effective at higher pHs and most waters are assumed to have a higher pH than 6.

CT values at temperatures other than 5 C in Table E-9 were determined by applying a twofold decrease for every 10 C increase. The data for pH 9 was not considered because it is very limited and other viruses are more resistant to chlorine dioxide than Hepatitus A is at pH 9. According to Hoff (1986) at a pH of 9 and a temperature of 21 C, a CT of 0.35 provides a 4-log inactivation of poliovirus 1. Applying the same safety factor and rule of thumb multipliers to this data results in a CT

of 2.8 for a 4-log virus inactivation at 0.5°C, in contrast to a CT of 50.1 resulting from the Hepatitus A data at pH 6. Therefore, in order to assure inactivation of Hepatitus A, the higher CT values are needed. Systems with high pHs may wish to demonstrate the effectiveness of chlorine dioxide at lower CT values based on the protocol in Appendix G. Chlorine dioxide is much more effective for inactivating rotavirus and polio virus than it is for inactivating HAV (Hoff 1986).

F.2.3 Chloramines

The CT values in Table E-13 at 5 C were based directly on data by Sobsey (1988) using preformed chloramines at pH 8. No safety factor was applied to the laboratory data since chloramination in the field, where some transient presence of free chlorine would occur, is assumed more effective than preformed chloramines.

HAV is less resistant to preformed chloramines than are other viruses. For example, CTs of 3,800-6,500 were needed for 2-log inactivation of simian rotavirus at pH = 8.0 and temperature = 5 C (Berman and Hoff, 1984). However, these same viruses are very sensitive to free chlorine. CT values ranging from less than 0.025 to 2.16 were required to achieve 99 percent inactivation of rotavirus by free chlorine at pH = 6-10 and temperature = 4-5 C (Hoff, 1986). HAV is more resistant to free chlorine than are rotaviruses.

The CT values in Table E-13 apply for systems using combined chlorine where chlorine is added prior to ammonia in the treatment sequence. This should provide sufficient contact with free chlorine to assure inactivation of rotaviruses. CT values Table E-13 should not be used for estimating the adequacy of disinfection in systems applying preformed chloramines or ammonia ahead of chlorine, since CT values based on HAV inactivation with preformed chloramines may not be adequate for destroying rotaviruses. In systems applying preformed chloramines, it is recommended that inactivation studies as outlined in Appendix G be performed with Bacteriophage MS2 as the indicator virus to determine sufficient CT values. Also, the protocol in Appendix G can be used by systems applying chlorine ahead of ammonia to demonstrate less stringent disinfection conditions than those indicated in Table E-13.

TABLE F-3

CT VALUES FOR INACTIVATION OF HEPATITUS A VIRUS BY FREE CHLORINE

(Source: Sobsey 1988)

LOG INACTIVATION	pH				
	6	7	8	9	10
2	1.18	0.70	1.00	1.25	19.3
3	1.75	1.07	1.51	1.9	14.6
4	2.33	1.43	2.03	2.55	9.8

TABLE F-4

CT VALUES FOR INACTIVATION OF HEPATITUS A VIRUS BY CHLORINE DIOXIDE (SOBSEY 1988)

	Experiment No.	ClO_2 Concentration (mg/L) Initial	Average
pH6	1	0.49	0.32
	2	0.50	0.33
	3	0.51	0.36
	4	0.51	0.37
pH9	1	0.5	0.5
	2	0.5	0.5

	Log Inactivation	Inactivation Time (min) Experiment No. 1	2	3	4	CT[1] Experiment No. 1	2	3	4	Average CT
pH6	2	12	9	5	7	3.8	3.0	1.8	2.6	2.8
	3	30	29	22	20	9.4	9.6	7.9	7.4	8.6
	4	55	59	43	39	17	20	16	14	16.7
pH9	>2.5	0.33	--	--	--	<0.17	--	--	--	<0.17
	>3.6	0.33	--	--	--	<0.17	--	--	--	<0.17

Note:

1. CT values were obtained by multiplying inactivation time by the average concentration shown above for each experiment.

F.2.4 Ozone

No laboratory CT values based on inactivation of HAV virus are yet available for ozone. Based on data from Roy (1982), a mean CT value of 0.2 achieved 2-log inactivation of poliovirus 1 at 5 C and pH 7.2. Much lower CT values are needed to achieve a 2-log inactivation of rotavirus (Vaughn, 1987). No CT values were available for achieving greater than a 2-log inactivation. The CT values in Table E-11 for achieving 2-log inactivation at 5 C were determined by applying a safety factor of 3 to the data from Roy (1982). CT values for 3 and 4-log inactivation were determined by applying first order kinetics and assuming the same safety factor of 3. CT values were adjusted for temperatures other than 5 C by applying a twofold decrease for every 10 C increase. Based on the available data, CT values for ozone disinfection are not strongly dependent on pH. Therefore, data obtained at pH = 7.2 is assumed to apply for pHs in the range of 6.0 to 9.0. However, it should be noted that the maintenance of an ozone residual is affected by pH.

F.2.5 Ultraviolet Light (UV)

The CT values for inactivation of viruses by UV are based on studies by Sobsey (1988) on inactivation of Hepatitis A virus (HAV) by UV. These data were used because HAV has been established as an important cause of waterborne disease. The CT values were derived by applying a safety factor of 3 to the HAV inactivation data. The CT values in Table E-14 are higher than the CT values for UV inactivation of poliovirus 1 and simian rotavirus from previous studies (Chang et al., 1985).

F.2.6 Potassium Permanganate

Potassium permanganate is a commonly used oxidant in water treatment. Preliminary testing by Yahya, et al 1988, indicates that potassium permanganate may contribute to virus inactivation. The test data included in Table F-5 indicates the inactivation of bacteriophage MS-2 using potassium permanganate with a pure water-buffer solution. These data do not include safety factors. It is likely that CT values for actual water treatment processes will differ from these values. This data has only been provided here as an indication of the potential of potassium

TABLE F-5

CT VALUES FOR 2-LOG INACTIVATION
OF MS-2 BACTERIOPHAGE WITH POTASSIUM PERMANGANATE

$KMnO_4$ (mg/L)	pH 6.0	pH 8.0
0.5	27.4 a[1]	26.1 a
1.5	32.0 a	50.9 b
2.0	ND[2]	53.5 c
5.0	63.8 a	35.5 c

Notes:

1. Letters indicate different experimental conditions.
2. Not determined.

THE BASIS FOR *GIARDIA* C·T VALUES IN THE SURFACE WATER TREATMENT RULE: INACTIVATION BY CHLORINE

by

Robert M. Clark, Director
Drinking Water Research Division
Risk Reduction Engineering Laboratory
Cincinnati, OH 45268

and

Stig Regli
Office of Drinking Water
U.S. Environmental Protection Agency
Washington, DC 20460

RISK REDUCTION ENGINEERING LABORATORY
OFFICE OF RESEARCH AND DEVELOPMENT
U.S. ENVIRONMENTAL PROTECTION AGENCY
CINCINNATI, OH 45268

February 1991

THE BASIS FOR GIARDIA C·T VALUES IN THE SURFACE WATER TREATMENT RULE: INACTIVATION BY CHLORINE

by

Robert M. Clark,[a] and Stig Regli[b]

INTRODUCTION

The 1986 amendments to the Safe Drinking Water Act (SDWA) require EPA to promulgate primary drinking water regulations (a) specifying criteria under which filtration would be required, (b) requiring disinfection as a treatment technique for all public water systems, and (c) establishing maximum contaminant levels (MCLs) or treatment requirements for control of Giardia lamblia, viruses, Legionella, heterotrophic plate count bacteria, and turbidity. EPA has promulaged treatment technique requirements to fulfill the SDWA requirement for systems using surface waters and ground waters under the direct influence of surface water.[1] Additional regulations specifying disinfection requirements for systems using ground water sources not under the direct influence of surface water will be proposed and promulgated at a later date. This paper presents a model that relates pH, temperature, chlorine concentration, and inactivation level to Giardia inactivation by free chlorine. Because Giardia lamblia is known to be one of the most resistant organisms to disinfection by chlorine found in water, much interest and effort

---

[a]Director, Drinking Water Research Division, Risk Reduction Engineering Laboratory, 26 W. Martin Luther King Drive, Cincinnati, Ohio 45268

[b]USEPA, Office of Drinking Water, 401 M Street, S.W., Washington, DC 20460

has been devoted to determination of C·t values for Giardia lamblia. The model has been used to predict "C·t" values that have been included as part of EPA's Surface Water Treatment Rule (SWTR).

BACKGROUND

Under the SWTR all community and non-community public water systems using surface water, or ground water under the direct influence of surface water, are required to provide minimum disinfection to control Giardia lamblia, enteric viruses and bacteria.[1] In addition, unless the source water is well protected and meets certain water quality criteria (total or fecal coliforms and turbidity limits), treatment must also include filtration. The treatment provided, in any case, is required to achieve at least 99.9 percent removal and/or inactivation of Giardia lamblia cysts and at least 99.99 percent removal and/or inactivation of viruses (i.e., virus of fecal origin and infectious to humans). Unfiltered systems are required to demonstrate that disinfection alone achieves the minimum performance requirements by monitoring disinfectant residual(s), disinfectant contact time(s), pH (if chlorine is used), and water temperature. These data must be applied to determine if their "C·t" value [the product of disinfectant concentration (mg/L) and disinfectant contact (minutes)] equals or exceeds the C·t values for Giardia lamblia specified in the SWTR.[1] With the exception of chloramines, where ammonia is added prior to chlorine, these C·t values are also adequate to achieve greater than 99.99 percent inactivation of viruses. For filtered systems, states are required to specify the level of disinfection for each system to ensure that their overall treatment achieves at least 99.9 and 99.99 percent removal and/or inactivation of Giardia lamblia cysts and viruses, respectively.[1]

In the Guidance Manual to the SWTR, EPA recommends C·t values for

different disinfectants to achieve levels of inactivation for unfiltered systems. Filtered systems will be required to achieve less inactivation then required for unfiltered systems. The percent inactivation that filtered systems should achieve as a function of the filtration technology in place and source water quality conditions is also recommended.[2]

PROBLEM

The destruction of pathogens by chlorination is dependent on a number of factors, including water temperature, pH, disinfectant contact time, degree of mixing, turbidity, presence of interfering substances, and concentration of chlorine available. The pH has a significant effect on inactivation efficiency because it determines the species of chlorine found in solution, each of which has a different inactivation efficiency.

The impact of temperature on disinfection efficiency is also significant. For Example, Clarke's work in virus destruction by chlorine indicates that contact time must be increased two to three times when the temperature is lowered 10°C.[3] Disinfection by chlorination can inactivate Giardia cysts, but only under rigorous conditions. Most recently, Hoff et al. concluded that (1) these cysts are among the most resistant pathogens known, (2) disinfection at low temperatures is especially difficult, and (3) treatment processes prior to disinfection are important.[4]

Typical C·t values for 99 percent inactivation of Giardia lamblia by free chlorine at different temperatures and pH values are shown in Table 1.

TABLE 1. C·T VALUES FOR 99% INACTIVATION OF *GIARDIA*[4] *LAMBLIA* CYSTS BY FREE CHLORINE

Temp (°C	pH	Disinfectant Concentration (mg/L)	Time (min)	C·t	Mean C·t	No. of Experiments
		Range				
5	6	1.0-8.0	6-47	47-84	65	4
	7	2.0-8.0	7-42	56-152	97	3
	8	2.0-8.0	72-164	72-164	110	3
15	6	2.5-3.0	7	18-21	20	2
	7	2.5-3.0	6-18	18-45	32	2
	8	2.5-3.0	7-21	21-52	37	2
25	6	1.5	< 6	< 9	< 9	1
	7	1.5	< 7	<10	<10	1
	8	1.5	< 8	<12	<12	1

Jarroll et al., using *in vitro* excystation to determine cyst viability, showed that greater than 99.8 percent of *Giardia lamblia* cysts can be killed by exposure to 2.5 mg/L of chlorine for 10 minutes at 15°C and pH 6, or after 60 minutes at pH 7 or 8. At 5°C, exposure to 2 mg/L of chlorine killed at least 99.8 percent of all cysts at pH 6 and 7 after 60 minutes.[5] While it required 8 mg/L to kill the same percentage of cysts at pH 6 and 7 after 10 minutes, it required 8 mg/L to inactivate cysts to the same level at pH 8 after 30 minutes. Inactivation rates decreased at lower temperatures and at higher pH values as indicated by the higher C·t values.

Because of the obvious interactions among these variables it is essential that a model be developed for predicting C·t values under the various conditions that may exist in drinking water systems.

OBJECTIVE

As indicated, many factors influence Giardia lamblia reaction kinetics. The objective of the study described in this paper therefore is to develop an equation that will relate C·t values for Giardia inactivated by chlorine to such factors as pH, temperature, level of inactivation and chlorine concentration. As mentioned previously, this equation ultimately provided the values presented in the SWTR and associated Guidance Manual for disinfection of Giardia lamblia by free chlorine.

SIGNIFICANCE

The significance of these efforts relates to the fact that EPA's Office of Drinking Water has adopted the C·t concept to quantify the inactivation of Giardia lamblia by disinfection with free chlorine. Whether or not a utility is forced to install surface water treatment will depend on its ability to meet the C·t values specified by the SWTR. Even if the utility is not required to install filtration a utility may have to make significant investments in holding basins and disinfection capacity in order to meet these requirements. Therefore C·t values established under the SWTR will be extremely important to the drinking water industry and the authors believe it is important that the industry understand the basis for the procedures used to estimate these values. This paper describes the way in which C·t values were calculated for the SWTR. It is unlikely that utilities can directly use the models developed in this paper, although it is important that they understand the mechanism by which C·t values have been derived. Tables generated from the model will be useful as they provide the C·t values for Giardia inactivation by chlorine that utilities must achieve. These tables are presented at the end of the paper.

THEORY

Current disinfection theory is based on the Chick or Chick-Watson model. Chick's law expresses the rate of destruction of microorganisms based on a first-order chemical reaction.[6]

$$dN/dt = -kt \quad (1)$$

which when integrated yields

$$\ln (N_t/N_o) = -kt \quad (2)$$

where

N_t = number of organisms present at time t (minutes)

N_o = number of organisms present at time 0

k = rate constant characteristic of type of disinfectant, microorganism, and water quality aspects of system (minutes^{-1})

t = time (minutes)

Watson, using Chick's data, refined this equation to produce an empirical relation that included changes in the disinfectant concentration:[7]

$$\ln (N/No) = r\, C^n t \quad (3)$$

where

C = concentration of disinfectant [(milligrams/liter)$^{1/n}$]

r = coefficient of specific lethality (liters/milligram · minutes)

n = coefficient of dilution (liters/milligrams · minutes)

or

$$(1/r) \ln (N_t/N_o) = C^n t \quad (4)$$

For a given level of survival such as $N_t/N_o = 0.001$ (3 log reduction) the left hand side of equation 4 is a constant K, or

$$K = C^n t \quad (5)$$

The value K will vary depending on the level of inactivation.

EFFECT OF OTHER VARIABLES

As indicated previously C·t values have been found to be a function of pH, temperature, disinfectant concentration and level of inactivation.[8] Therefore in this study equation 5 was reformulated as follows:

$$C \cdot t = C^{-(n-1)} K \qquad (6)$$

where

K = f (pH, temp, I)

I = ratio of organisms at time t to the organisms at time 0 (N_t/N_o)

temp = temperature at which experiment was conducted in °C

pH = pH at which experiment was conducted in pH units

Equation 6 can be rewritten in the form:

$$C \cdot t = R\, I^a C^b pH^c temp^d \qquad (7)$$

where

R,a,b,c, and d are coefficient to be determined.

A more convenient form for coefficient estimation and the one used in this paper is as follows:

$$t = R\, I^a C^{b-1} pH^c temp^d \qquad (8)$$

As will be discussed in the following sections these coefficients will be determined by a statistical analysis using appropriate data bases.

COEFFICIENT ESTIMATES

Several data sets are available for estimating the coefficients in equation 8. Data sets have been developed by Jarroll, Hibler, Rice and Rubin.[5,9,10,11]

Much of the available Giardia inactivation data is based on excystation rather than animal infectivity since it is an easier measure of cyst viability.[11] Hoff et al. compared mouse infectivity and excystation for

determining the viability of G. muris cysts exposed to chlorine and reported that both methods yielded similar results.[12] Hibler et al. used Mongolian gerbils to determine the effects of chlorine on G. lamblia cysts.[9] In a series of experiments, cysts were exposed for various time periods to free chlorine concentrations ranging from 0.4 to 4.2 mg/L at 0.5, 2.5, and 5.0°C and pH 6, 7, and 8. Each of 5 gerbils was fed 5 x 10^4 of the chlorine exposed cysts and subsequently examined for evidence of infection. Since the test animals had each received a dose of 5 x 10^4 of the chlorine exposed cysts and subsequently examined for evidence of infection and since infectivity studies with unchlorinated cysts showed that approximately 5 cysts usually constituted an infective dose, the following assumptions were made depending on the infectivity patterns occurring in the animals. If all five animals were infected, it was assumed that C·t had produced less than 99.99 percent inactivation and if no animals were infected, that it had produced greater than 99.99 percent inactivation.[9] If, however, 1-4 animals were infected it was assumed that the level of viable cysts were 5 per animal and that 99.99 percent of the original cyst population had been inactivated. Hibler interpolated from the results and provided comprehensive tables showing C·t values at 0.5°C temperature intervals.[9] Because of observations indicating that C·t values increased as chlorine concentration increased within the range of chlorine concentrations used, Hibler et al. advised against use of the C·t values for chlorine concentrations above 2.5 mg/L.

Table 2 summarizes Hibler's data for the different experimental conditions examined. Column 3 shows the range of chlorine concentrations in mg/L to which cysts were exposed before being fed to the gerbils, and Column 7 shows the number of experiments which yields 1-4 infected gerbils out of 5.

Column 4 shows the range of cyst exposure times and Column 5 contains the range of C·t values that are the product of the chlorine concentration and cyst exposure time.

TABLE 2. C·T VALUES FOR 99.99 PERCENT INACTIVATION BASED ON ANIMAL INFECTIVITY DATA

pH	Temp °C	Range of Conc. (mg/L)	Range of Cyst Exposure Time (min)	Range of C·t values from Data	Range of Predicted C·t Values	Number of Observations
6	0.5	0.56-3.96	39-300	113-263	136-192	25
6	2.5	0.53-3.80	18-222	65-212	107-151	15
6	5	0.44-3.47	25-287	50-180	93-134	26
7	0.5	0.51-4.05	76-600	156-306	205-295	14
7	2.5	0.64-4.23	55-350	124-347	169-235	14
7	5	0.73-4.08	47-227	144-222	156-211	15
8	0.5	0.49-3.25	132-593	159-526	294-410	22
8	2.5	0.50-3.24	54-431	175-371	233-324	21
8	5	0.84-3.67	95-417	200-386	209-299	15

Hibler's data set, based on animal infectivity, is appealing because it is a more direct indicator of cyst viability than data based on excystation. However the C·t values in this data set are based solely on 99.99 percent inactivation. The other three data sets, based on excystation, have values calculated for all four parameters in equation 8. Table 3 contains a summary characterization of the studies on which these data sets were based. Because no one individual experiment provided the exact characteristics required for this study an attempt was made to find the "most consistent" set of data for parameter estimation, which might include several of the data sets discussed.

TABLE 3. CHARACTERIZATION OF G. LAMBLIA FREE CHLORINE* INACTIVATION STUDIES USED IN PREDICTIVE MODELS

Reference No.	Cyst Source	Viability Assay	Comments
5	Symptomatic human	excystation	Conventional survival curves based on multiple samples. End point - 0.1% survival
7	Gerbils, adapted from infected humans. (CDC isolate)	gerbil infectivity (5 animals/sample)	No survival curves. Endpoint sought - 0.01% survival
8	Symptomatic and nonsymptomatic humans	excystation	Conventional survival curves based on multiple samples. End point - 0.1% survival
9	Gerbils adapted from infected humans. (Several isolates used)	excystation	Conventional survival curves based on multiple samples. End

*Data provided by Dr. John Hoff formerly of USEPA

The Hibler data set was included in all combinations considered because it was the largest data set, the data set was based on animal infectivity, and the data reflected higher percent inactivation than required under the SWTR. Since the data based on excystation, with the exception of a few data points, only reflected percent inactivation up to 1 log or less than that required under the SWTR, inclusion of the Hibler data was considered essential for developing a model that could predict disinfection conditions for achieving

99.9 percent inactivation with minimum uncertainty. Filtered systems will need to know disinfection conditions for achieving less than 99.9 percent inactivation. Therefore data from at least one of the excystation studies was considered essential since the C·t values in the SWTR may be used for calculating partial inactivation levels (i.e., less than 99.9 percent).

A fundamental question that needed to be addressed was the statistical compatibility of the data sets. Initial regression estimates for each of the data sets were made using equation 8.[13] High "r^2" were obtained for these fits but significant differences were found for the "R" coefficient or slope. This indicated that the basic model was adequate but that there were differences in the coefficients as defined by the individual estimates using equation 8. It was decided to "anchor" all of the data sets to the Hibler data set. The approach used was to construct an indicator random variable to move the regression intercept or slope to compensate for data set differences.[13] The significance of the indicator random variable would support the hypothesis of different regression surfaces, i.e., incompatibility of the data sets chosen. The indicator random variable was created in such a way as to always differentiate between the Hibler data set and other data sets considered and to move the regression intercept not the slope. The indicator random variable was defined as follows:

$$z = \begin{bmatrix} 0 \text{ if Hibler data} \\ 1 \text{ if other data} \end{bmatrix} \qquad (9)$$

Therefore equation 8 was modified as follows:

$$t = R\, I^a C^{b-1} pH^c temp^d 10^{ez} \qquad (10)$$

where t, I, C, pH, temp are defined as in equation 8, and R,a,b,c,d,e are constants determined from regression.

Equation 10 can be transformed as follows:

$$\log t = \log R + a \log I + (b-1) \log C + c \log pH + d\ temp + ez \qquad (11)$$

In equation 11 when z = 0 equation 10 is defined over the Hibler data set, and

$$t = R\ I^a\ C^{b-1}\ pH^c\ temp^d \qquad (12)$$

When z = 1 equation 10 is defined over the remaining data and

$$t = (R * 10^e)\ I^a\ C^{b-1}\ pH^c\ temp^d \qquad (13)$$

Table 4 displays the data set combinations and regression diagnostics. Note that z is the indicator random variable.

In Table 4, the first column shows the various data sets considered in the analysis. Column two contains the "r^2" values based on equation 13 for each of the data combinations. Column three indicates major results of the analysis. For example it was found, for the first data set combination, that the intercept, and temperature variable were not significant. Column 4 shows the test that was used to determine whether or not the equation yields biased results.

As indicated in Column 4 of Table 4 residual plots were used to determine constant variance and normality. Fortunately a strict assumption of normality is not required. As stated in Neter, Wasserman and Whitmore "Small departures from normality do not create any serious problems.[14] Major departures, on the other hand, should be of concern". Further they write, "Unless the departures from normality are serious, particularly with respect to skewness, the actual confidence coefficients and risks of error will be close to the levels for exact normality". In addition because of the large sample size one would expect the central limit theories would apply and symmetry would not be an issue.

It was found that 90% of the data fell within plus/or/minus 1.64 standard deviations of the mean. In addition 75% of the data fell within plus or minus 1 minus standard deviation which gives support for the normality assumption. [For a perfect normal distribution we would expect 68% of the data to lie within plus or minus 1 standard deviation. Similarly, we would expect 90% to lie within plus or minus 1.64 standard deviation of the mean].

The indicator random variable for the intercept variable using the Hibler, Jarroll data base was not significant (p-value = 0.3372). All other data bases considered had a significant indicator random variable at the 0.095 level of significance. A formal test for differences of intercept and/or slope between the Hibler and Jarroll data sets was conducted and no difference was detected.

As mentioned previously the Hibler data set does possesses some desirable characteristics and it is the largest data set among all data sets available. However one might argue that by forcing the Hibler data set into the analysis the possibility has been ignored that the other data sets may be mutually consistent, and the Hibler data set may represent an "outlier". In addition, one might hypothesize that data from different experimental situations prohibits us from making a reasonable comparison among these excystation studies. Table 4 shows that the Hibler and Jarroll data sets are compatible. Since Table 4 also shows that Hibler-Rice and Hibler-Rubin is not consistent, then it is reasonable to assume that the Jarroll date is not consistent with the Rice and Rubin data so that the Hibler data is not alone in being inconsistent with the other data sets. It seems reasonable therefore to start with the Hibler data set, the largest one, then incorporate other smaller data sets into the modeling process. Thus logic supports the use of the Hibler,

Jarroll data base for extending the model development and the coefficients in equation 8 were estimated using these data as shown in Table 5 in the log transformed form.[13]

TABLE 4. DIAGNOSTIC RESULTS FROM DATA SET COMBINATION ANALYSIS

Data sets considered	R-Square	Variables	Plots
Hibler, Rice, Jarroll, Rubin	0.6801	intercept, temp not-significant	non-normal data non-constant var
Hibler, Rice, Jarroll, Rubin, z	0.7316	intercept, temp not-significant	non-normal data non-constant var
Hibler, Rice, Rubin	0.6649	intercept, temp not-significant	non-normal data non-constant var
Hibler, Rice, Rubin, z	0.7899	intercept not-significant	non-normal data non-constant var
Hibler,, Jarroll, Rubin	0.6424	intercept, temp not-significant	non-normal data non-constant var
Hibler, Jarroll, Rubin, z	0.6879	intercept, temp not-significant	non-normal data non-constant var
Hibler, Rice, Jarroll	0.8619	all variables significant	non-normal data non-constant var
Hibler, Rice, Jarroll, z	0.865	all variables significant	non-normal data non-constant var
Hibler, Rubin	0.6483	temp not-significant	non-normal data non-constant var
Hibler, Rubin, z	0.7593	intercept not-significant	non-normal data constant var
Hibler, Rice	0.8548	all variables significant	non-normal data constant var
Hibler, Rice, z	0.8678	all variables significant	non-normal data constant var
Hibler, Jarroll	0.8452	all variables significant	non-normal data constant var
Hibler, Jarroll, z	0.8459	z not significant	non-normal data constant var

TABLE 5. COEFFICIENT ESTIMATES FOR EQUATION 8.

Variable	DF	Coefficient	Statistical Analysis: Standard Error	T for HO: Parameter=0	PROB > |0|	Variance Inflation Factor
INTERCEP	1	-0.902	0.200	-4.518	0.0001	0.000
LOGI	1	-0.268	0.014	-19.420	0.0001	1.183
LOGCHLOR	1	-0.812	0.042	-19.136	0.0001	1.033
LOGPH	1	2.544	0.221	11.535	0.0001	1.032
LOGTEMP	1	-0.146	0.028	-5.117	0.0001	1.179

In Table 5 column 7 entitled the "Variance Inflation Factor (VIF)" is defined as $(1-R_k^2)$ where R_k^2 is the coefficient of multiple determination when X_k is regressed on the other variables in the model. The minimum value of VIF is 1 if there is no multicollinearity. As shown in column 7 all of the variance inflation factors are close to one.

DISCUSSION OF MODEL

As discussed in the previous sections the coefficients for equation 8 were determined by a combination of log transformation and linear regression. An issue to consider is the probability that there is measurement error in the model's independent variables and the effect that this could have on estimates of the parameters.

Regression is intended to fulfill the dual purposes of prediction and explanation. The purpose of equation 8 is primarily to predict by providing water utilities guidance as to what C·t values will be needed for a desired level of inactivation. The purpose of this model is to predict C·t values and will not be hampered by measurement error as long as consistency is maintained.[15] Since any measurement is subject to some type of error, the approach taken to deal with this issue was to provide safe or "conservative estimates" of C·t values.

As one of the diagnostic procedures applied to the analysis equation 13 was evaluated for multicolinearity. As can be see from Table 5 all of the coefficients are highly significant and there is no multicolinearity.

TABLE 6. COLLINEARITY DIAGNOSTICS

Condition Number	VAR PROP Intercep	VAR PROP LOGI	VAR PROP LOGCHLOR	VAR PROP LOGPH	VAR PROP LOGTEMP
1.000	0.0002	0.0031	0.0214	0.0003	0.0174
2.495	0.0001	0.0063	0.0138	0.0001	0.7833
2.801	0.0003	0.0067	0.9285	0.0004	0.0005
10.662	0.0147	0.9266	0.0029	0.0253	0.1918
45.636	0.9847	0.0574	0.0334	0.9739	0.0071

In Table 6 VAR PROP is the variance-decomposition proportion (VDP) and has a maximum value of 1. A high condition number coupled with high VDP values for two or more coefficients is an indication of multicollinearity between those variables. A condition of 45.636 in conjunction with an intercept VDP of 0.9847 and Log(pH) VDP of 0.9739 indicated a dependency between the intercept and Log(pH) variable, however, multicollinearity among the other coefficients were nonexistent.

The final equation used for predicting C·t values in the SWTR was based on equation 8 as follows:

$$C \cdot t = RI^{a}C^{b}pH^{c}temp^{d} \qquad (14)$$

Confidence intervals of the coefficients estimate for equation 14 based on the Bonferroni method at a 99% confidence interval are:[14,16]

R: (0.384, 0.4096)
a: (-0.2321, -0.3031)
b: (0.0792, 0.2977)
c: (1.9756, 3.1117)
d: (-0.2192, -0.0724)

RESULTS

There are many uncertainties regarding the various data sets that might be considered for calculating C·t values. The random variable analysis shows the statistical incompatibility among most of these data sets. More work needs to be done to define the impact of strain variation and *in vivo* versus *in vitro* techniques on C·t values. In order to provide conservative estimates for C·t values in the SWTR and the guidance document the authors used the approach illustrated in Figure 1.

In Figure 1 the 99% confidence interval of the 4 log inactivation level is calculated. First order kinetics are then assumed so that the inactivation "line" goes through 1 at C·t = 0 and a C·t value equal to the upper 99% confidence interval at 4 logs of inactivation. As can be seen the inactivation line consists of higher C·t values than all of the mean predicted C·t values from equation 14, most of the Jarroll et al., and most of the Hibler data points. Conservative C·t values, for a specified level of inactivation, can be obtained from the inactivation line prescribed by the disinfection conditions. For the example indicated in Figure 1, the appropriate C·t for achieving 99.9% inactivation would be 105. This approach (assumption of first order kinetics) also provides the basis for establishing credits for sequential disinfection steps allowed under the SWTR. It should be noted that this approach provides very conservative estimates at mid range levels of C·t.

Note in Figure 1 that some of the individual data points fall outside the 99% confidence interval estimated at the four logs of inactivation. This is to be expected since the confidence intervals constructed were for mean C·t values, but also indicated the high variability of the Hibler data.

Equation 14 was applied using the above strategy, as a safety factor, to determine the C·t values for 99.9 percent inactivation at 0.5°C and 5°C in the

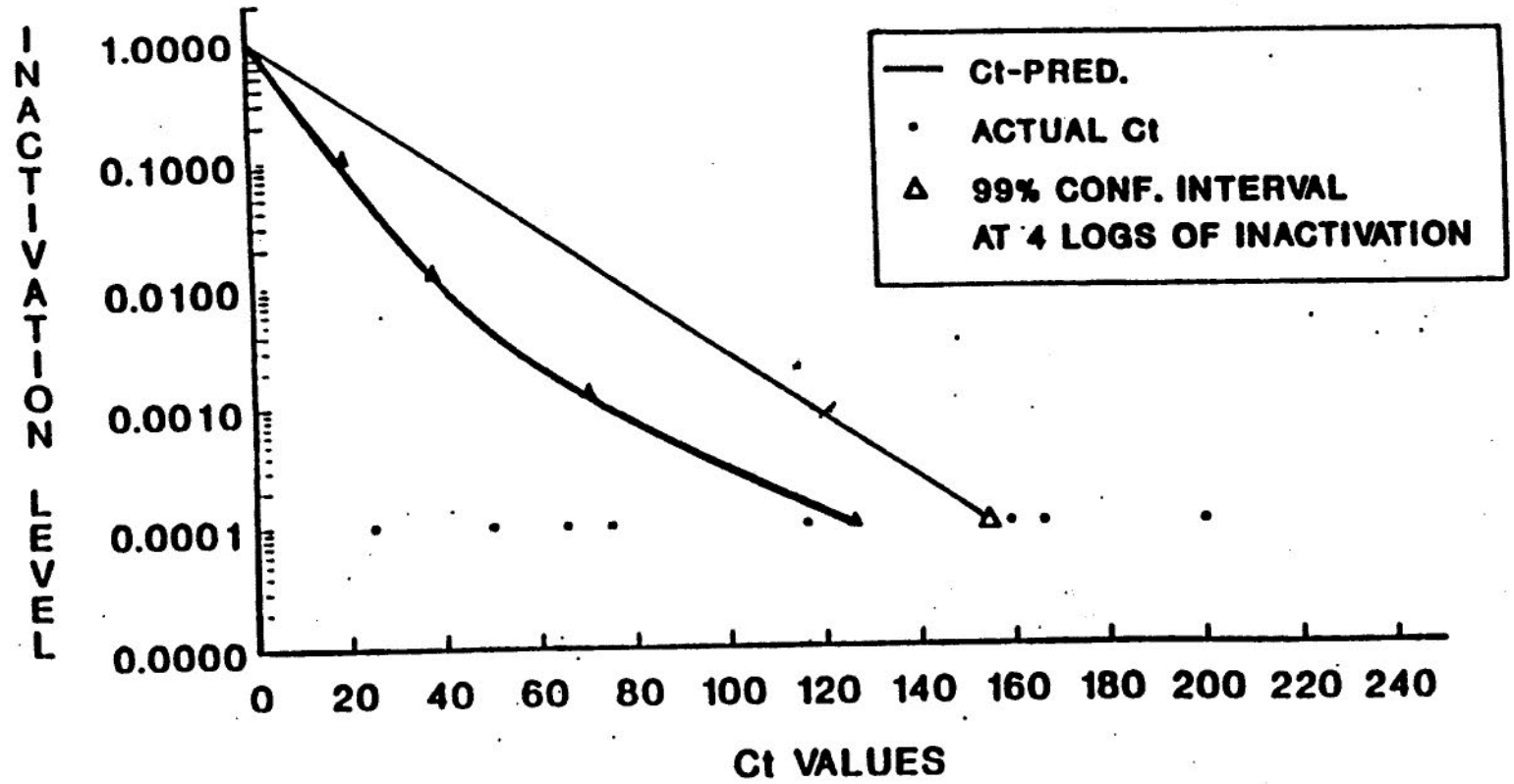

FIGURE 1. 99% CONFIDENCE LEVELS USING EQUATION 14 FOR CHLORINE = 2 mg/l; PH = 6; TEMPERATURE = 5° C

final SWTR.[1] C·t values for temperatures above 5°C were estimated assuming a twofold decrease for every 10°C increase in temperature since all the Hibler data was generated at 5°C or less. This general principle is supported by Hoff.

Application of equation 14 to pHs above 8, up to 9, was considered reasonable because the model is substantially sensitive to pH (e.g., C·ts at pH 9 are about three times greater than C·ts at pH 6 and about two times greater than C·ts at pH 7). At a pH of 9, approximately four percent of the hypochlorous acid fraction of free chlorine is still present. Other data indicate that in terms of HOCl residuals (versus total free chlorine residuals including HOCl and OCl^-) the C·t values required for inactivation of Giardia muris and Giardia lamblia cysts decrease with increasing pH from 7 to 9.[10] However, with increasing pH, the fraction of free chlorine existing as the weaker oxidant species (OCl^-) increases. In terms of total free chlorine residuals (i.e., HOCl and OCl^-) the C·t values required for inactivation of Giardia muris and Giardia lamblia cysts increase with increasing pH from 7 to 9 but generally less than by a factor of 2 at concentrations of less than 5.0 mg/L.[10] Table 7 compares the C·t values in the proposed SWTR to those given in the SWTR. The C·t values in the proposed SWTR were based only on the Hibler data and included different safety factors.[2,8]

TABLE 7. COMPARISON BETWEEN MODIFIED APPROACH (MEANS) AND RULE C·TS AT 99.9% INACTIVATION AND 5°C IN THE PROPOSED AND FINAL SWTR

Concentration	pH 6		7		8		9	
mg/L	Proposed	Final	Proposed	Final	Proposed	Final	Proposed	Final
1	105	108	149	165	216	238	329	312
2	116	122	165	186	243	269	371	353

The C·t values in the final SWTR are 0-10 percent lower than in the proposed SWTR. Table 8 presents representative C·t values determined by application of the above described approach.

TABLE 8. CALCULATED C·T VALUES FOR GIARDIA INACTIVATION USING USING EQUATION 14 AT 0.5°C and 5°

Values for Inactivation of Giardia Cysts by Free Chlorine at 0.5°C

Chlorine Concentration	pH = 6 Log Inactivation				pH = 7 Log Inactivation				pH = 8 Log Inactivation				pH = 9 Log Inactivation			
mg/L	0.5	1.0	2.0	3.0	0.5	1.0	2.0	3.0	0.5	1.0	2.0	3.0	0.5	1.0	2.0	3.8
0.4	23	46	91	137	33	65	130	195	46	92	185	277	65	130	260	390
1	25	49	99	148	35	70	140	210	51	101	203	304	73	146	291	437
2	28	55	110	165	39	79	157	236	58	115	231	346	83	167	333	500
3	30	60	121	181	44	87	174	261	64	127	255	382	92	184	368	552

Values for Inactivation of Giardia Cysts by Free Chlorine at 5°C

Chlorine Concentration	pH = 6 Log Inactivation				pH = 7 Log Inactivation				pH = 8 Log Inactivation				pH = 9 Log Inactivation			
mg/L	0.5	1.0	2.0	3.0	0.5	1.0	2.0	3.0	0.5	1.0	2.0	3.0	0.5	1.0	2.0	3.8
0.4	16	32	65	97	23	46	93	139	33	66	137	198	47	93	186	279
1	18	35	70	105	25	50	99	149	36	72	144	216	52	104	208	312
2	19	39	77	116	28	55	110	165	41	81	162	243	59	118	235	353
3	21	42	84	126	30	61	121	182	45	89	179	268	65	130	259	389

Because calculations for the SWTR C·t values are the upper limit on the error bounds associated with equation 14 (Table 8), an equation was developed to estimate these C·t values for 0.5 and 5°C directly. C·t values above 5°C can be estimated by using the method given below to estimate C·t values at 5°C, then the assumption that there is a twofold decrease in C·t values for every 10°C increase in temperature can be applied. The equation for the estimated C·t values at 0.5 and 5°C is as follows:

$$C \cdot t = 0.36\ pH^{2.69} temp^{-0.15} C^{0.15} (-\log I)^{1.00} \quad (R^2 = 0.998) \qquad (15)$$

where the variables in equation 15 are as defined previously.

Table 9 compares the values estimated by equation 15 and the SWTR values shown in Table 8.

TABLE 9. CALCULATED C·T VALUES FOR GIARDIA INACTIVATION USING EQUATION 15 AT 0.5 AND 5°C

Values for Inactivation of Giardia Cysts by Free Chlorine at 0.5°C																
Chlorine Concentration mg/L	pH = 6 Log Inactivation				pH = 7 Log Inactivation				pH = 8 Log Inactivation				pH = 9 Log Inactivation			
	0.5	1.0	2.0	3.0	0.5	1.0	2.0	3.0	0.5	1.0	2.0	3.0	0.5	1.0	2.0	3.8
0.4	22	43	86	129	33	65	131	196	47	94	187	281	64	129	257	385
1	25	49	99	148	37	75	149	224	54	107	214	321	74	147	294	441
2	27	55	109	164	41	83	165	248	59	118	137	355	81	163	325	487
3	29	58	116	174	44	88	175	263	63	126	251	377	86	173	345	517

Values for Inactivation of Giardia Cysts by Free Chlorine at 5°C																
Chlorine Concentration mg/L	pH = 6 Log Inactivation				pH = 7 Log Inactivation				pH = 8 Log Inactivation				pH = 9 Log Inactivation			
	0.5	1.0	2.0	3.0	0.5	1.0	2.0	3.0	0.5	1.0	2.0	3.0	0.5	1.0	2.0	3.8
0.4	15	31	61	91	23	46	92	138	33	66	132	198	46	91	182	272
1	17	35	70	104	26	53	106	158	38	76	151	227	52	104	208	311
2	19	39	77	116	29	58	117	175	42	84	167	251	58	115	320	345
3	20	41	82	123	31	62	124	186	44	89	178	266	61	122	244	366

FUTURE WORK

Because of the importance from an economic and a public health viewpoint of the calculation of C·t values for the inactivation of Giardia lamblia by free chlorine, much effort has been expended in developing models that interrelate the important variables effecting these values.[8] The work reported in this paper reflects the authors attempts to develop such a relationship for inclusion in the SWTR. However, it also raises a very interesting point regarding the application of statistical methodology to public policy decision problems. There is no perfect "regulatory" experiment that answers all of the textbook questions that could be raised regarding regulatory decision making. One has to use available data and incorporate the best judgment that can be brought to bear on a given issue to insure that public health and welfare is protected. The need to combine data sets from different investigations and then develop a decision rule based on the data, as shown in this paper, as an example of the this process.

There is no doubt in the authors' mind that other better models may be developed. For example, Haas' work in applying the Hom model to inactivation data and incorporating the method of Maximum Likelihood for estimating parameters is promising.[17] The authors believe that the public is best served by examining problems from many different points of view and encourage others to pursue these difficult, frustrating but extremely challenging problems.

SUMMARY AND CONCLUSIONS

Amendments to the Safe Drinking Water Act clearly require that all surface water suppliers in the U.S. filter and/or disinfect to protect the health of their customers. G. lamblia has been identified as one of the leading causes of waterborne disease outbreaks in the U.S. G. lamblia cysts are also one of the most resistant organisms to disinfection by free chlorine.

EPA's Office of Drinking Water has adopted the C·t concept to quantify the inactivation of G. lamblia cysts by disinfection. If a utility can assure that a large enough C·t can be maintained to ensure adequate disinfection then, depending upon site specific factors, it may not be required to install filtration. Similarly, the C·t concept can be applied to filtered systems for determining appropriate levels of protection.

In this paper, an equation has been developed that can be used to predict C·t values for the inactivation of G. lamblia by free chlorine based on the interaction of disinfectant concentration, temperature, pH, and inactivation level. The parameters for this equation have been derived from a set of animal infectivity and excystation data. The equation can be used to predict C·t values for achieving 0.5 to 4 logs of inactivation, within temperature ranges of 0.5 to 5°C, chlorine concentration ranges up to 4 mg/L, and pH levels of 6 to 8. While the model was not based on pH values above 8, the model is still considered applicable up to pH level of 9. The equation shows the effect of disproportionate increases of C·t versus inactivation levels. Using 99% confidence intervals at the 4 log inactivation levels and applying first order kinetics to these end points a conservative regulatory strategy for defining C·t at various levels of inactivation has been developed. This approach represents an alternative to the regulatory strategy previously proposed.

ACKNOWLEDGMENTS

The authors would like to acknowledge Ms. Patricia Pierson and Ms. Diane Routledge for their assistance in preparing this manuscript. The authors are grateful to Dr. John Hoff, formerly of USEPA, Ms. Shirley Pien and Ms. Eleanor Read of the Computer Sciences Corporation, Mr. Dennis Black of the University of Nevada, Las Vegas, and Dr. Charles Haas of the Illinois Institute of Technology for their review and suggestions to improve the manuscript. The authors would like to extend a special acknowledgement to Ms. Dianne Wild for her assistance in the preparation of this manuscript.

REFERENCES

1. National Primary Drinking Water Regulations: Filtration, Disinfection, Turbidity, Giardia lamblia, Viruses, Legionella, and Heterotrophic Bacteria. Final Rule, 40 CFR parts 141 and 142. Fed. Reg. 54:124:27486 (June 29, 1989).

2. U.S. Environmental Protection Agency, Office of Drinking Water, Criteria and Standards Division. Guidance Manual for Compliance with the Filtration and Disinfection Requirements for Public Water Systems Using Surface Water Sources, October 1987.

3. Clarke, N. A., Berg, C., Kabler, P. W., and Chang, S. L., "Human Enteric Viruses in Water: Source, Survival, and Removability". International Conference on Water Pollutions Research, Landar, September, 1962.

4. Hoff, J. C., Rice, E. W., and Schaefer III, F. W. "Disinfection and the Control of Waterborne Giardiasis", In Proceedings of the 1984 Specialty Conference, Environmental Engineering Division, ASCE, June 1984.

5. Jarroll, E. L., Bingham, A. K., and Meyer, E. A. "Effect of Chlorine on Giardia Lamblia Cyst Viability". Applied and Environmental Microbiology, Vol. 41, pp. 483-48, February, 1981.

6. Chick, H., "an Investigation of the Laws of Disinfection:, J. Hygiene, 8, 92 (1908).

7. Watson, W. E., "A Note on the Variation of the Rate of Disinfection with Change in the Concentration of the Disinfectant", J. Hygiene, 8, 536 (1908).

8. Clark, R. M., Read, E. J., and Hoff, J. C. "Analysis of Inactivation of Giardia Lamblia by Chlorine", Journal of Environmental Engineering, ASCE, Vol. 115, No. 1, February, 1989, pp. 80-90.

9. Hibler, C. P., Hancock, C. M., Perger, L. M., Wegrzyn, J. G. and Swabby, K. D. "Inactivation of Giardia Cysts with Chlorine at 0.5°C to 5.0°C. american Water Works Association Research Foundation, 6666 West Quincy Avenue, Denver, Colorado 80235, 1987.

10. Rice, E. W., Hoff, J. C. and Schaefer III, F. W. "Inactivation of Giardia Cysts by Chlorine", Applied and Environmental Microbiology, Jan. 1982, Vol. 43, No. 1, pp. 250-251.

11. Rubin, A. J., Evers, D. P., Eyman, C. M., and Jarroll, E. L., "Inactivation of Gerbil-Cultured Giardia Lamblia Cysts by Free Chlorine", Applied and Environmental Microbiology, Oct. 1989, Vol. 55, No. 10, p. 2592-2594.

12. Hoff, J. C., "Inactivation of Microbial Agents by Chemical Disinfectants" EPA/600/2-86-067.

13. Draper, N. and Smith, H. (1981) Second Edition, Applied Regression Analysis, Wiley: New York.

14. Neter, J. and Wasserman, W. (1974), Applied Linear Statistical Models, Irwin: Homewood, IL.

15. Fuller, Wayne, Measurement Error Models, John Wiley & Sons, 1987.

16. Belsley, D. A., Kuh, e. and Welsch, R. E. (1980), Regression Diagnostics, Wiley: New York.

17. Haas, Charles W., and Hillar, B. Statistical Analysis of Data on Chlorine Inactivation of Giardia Lamblia, Final Report prepared for U.S. EPA Office of Drinking Water, January 6, 1988.

GLOSSARY

$d N_t/dt$ = rate of change of organisms with respect to time

k = inactivation rate in $minutes^{-1}$

t = time in minutes

N_t = number of organisms at time t

N_o = number of organisms at time 0

r = coefficient of specific lethality (liters/milligram - minutes)

C = concentration of disinfectant $[milligrams/liter]^{1/n}$

n = coefficient of dilution

K = constant at given level temperature, pH and inactivation level

pH = pH in water phase

temp = temperature in °C

I = level of inactivation

C·t = concentration in mg/L times time in minutes

R = coefficient to be determined

a = coefficient to be determined

c = coefficient to be determined

d = coefficient to be determined

e = coefficient to be determined

z = coefficient to be determined

VIF = variance inflation factor. If VIF is 1 there is no multicolinearity

VDP = variance decomposition number. If VDP is high for two or more variables there is an induction of multicolinearity between variables

Bonferroni technique = a conservative method of estimating confidence intervals

permanganate as a disinfectant. It is not meant to be used as a basis for establishing CT requirements.

References

Berman, D.; Hoff, J. Inactivation of Simian Rotavirus SA 11 by Chlorine, Chlorine Dioxide and Monochloramine. Appl. Environ. Microbiol., 48:317-323, 1984.

Chang, J.C.H.; Ossoff, S.F.; Lobe, D.C.; Dorfman, M.H.; Dumais, C.M.; Qualls, R.G.; Johnson, J.D. Inactivation of Pathogenic and Indicator Microorganisms. Applied Environ. Micro., June 1985, pp. 1361-1365.

Clark, R.M.; Read, E.J.; Hoff, J.C. Inactivation of Giardia lamblia by Chlorine: A Mathematical and Statistical Analysis. Unpublished Report, EPA/600/x-87/149, DWRD, Cincinnati, OH, 1987.

Clark, R.; Regli, S.; Black, D. Inactivation of Giardia lamblia by Free Chlorine: A Mathematical Model. Presented at AWWA Water Quality Technology Conference. St. Louis, Mo., November 1988.

Clark, M.R.; Regli, S. The Basis for Giardia CT Values in the Surface Water Treatment Rule: Inactivation by Chlorine. Submitted to Journal of Water Supply Research and Technology-Aqua, August 1990.

Hibler, C.P.; C.M. Hancock; L.M. Perger; J.G. Wegrzn; K.D. Swabby Inactivation of Giardia cysts with Chlorine at 0.5 C to 5.0 C American Water Works Association Research Foundation, In press, 1987.

Hoff, J.C. Inactivation of Microbial Agents by Chemical Disinfectants, EPA/600/52-86/067, U.S. Environmental Protection Agency, Water Engineering Research Laboratory, Cincinnati, Ohio, September, 1986.

Jarroll, E.L.; A.K. Binham; E.A. Meyer Effect of Chlorine on Giardia lamblia Cyst Viability. Appl. Environ. Microbiol., 41:483-487, 1981.

Leahy, J.G.; Rubin, A.J.; Sproul, O.J. Inactivation of Giardia muris Cysts by Free Chlorine. Appl. Environ. Microbiol., July 1987.

Rice, E.; Hoff, J.; Schaefer, F. Inactivation of Giardia Cysts by Chlorine. Appl. and Environ. Microbiology, 43:250-251, January 1982.

Roy, D., R.S. Engelbrecht, and E.S.K. Chian. Comparative Inactivation of Six Enteroviruses by Ozone. J. AWWA, 74(12):660, 1982.

Rubin, A. Factors Affecting the Inactivation of Giardia Cysts by Monochloramine and Comparison with other Disinfectants. Water Engineering Research Laboratory, Cincinnati, OH March 1988a.

Rubin, A. "CT Products for the Inactivation of Giardia Cysts by Chlorine, Chloramine, Iodine, Ozone and Chlorine Dioxide" submitted for publication in J. AWWA, December, 1988b.

Sobsey, M. Detection and Chlorine Disinfection of Hepatitus A in Water. CR-813-024. EPA Quarterly Report. December 1988.

Vaughn, J.; Chen, Y.; Lindburg, K.; Morales, D. Inactivation of Human and Simian Rotaviruses by Ozone. Appl. Environ. Microbiol., 53(9):2218-2221, September 1987.

Wickramanayake, G.; Rubin, A.; Sproul, O. Effects of Ozone and Storage Temperature on Giardia Cysts. J.AWWA, 77(8):74-77, 1985.

Yahya, M.T., Landeen, L.K., Forsthoefel, N.R., Kujawa, K., and Gerba, C.P. Evaluation of Potassium Permanganate for Inactivation of Bacteriophage MS-2 in Water Systems. Copyright 1988, Carus Chemical Company, Ottawa, Illinois.

APPENDIX G-1

DETERMINING CHLORAMINE INACTIVATION OF *GIARDIA* FOR THE SURFACE WATER TREATMENT RULE

Microbiological Treatment Branch
Risk Reduction Engineering Laboratory

and

Parasitology and Immunology Branch
Environmental Monitoring Systems Laboratory
U.S. Environmental Protection Agency
26 West Martin Luther King Drive
Cincinnati, Ohio 45268

TABLE OF CONTENTS

I. Materials.....3

II. Reagents.....4

III. *Giardia muris* Assay.....7

IV. Disinfection Procedures for *Giardia*.....10

V. Procedure for Determining Inactivation.....12

VI. Bibliography.....13

VII. Technical Contacts.....14

Appendix

A. Use of the Hemocytometer.....15

B. Preparation and Loading of Chamber Slides.....20

The Surface Water Treatment Rule requires 99.9% or greater removal/inactivation of Giardia. The following protocol may be used to determine the percentage of Giardia inactivation obtained by a treatment plant using chloramine disinfection.

I. MATERIALS

A. Materials for Disinfection

1. Stock chlorine solution
2. Stock ammonia solution
3. Stirring device
4. Incubator or water bath for temperatures below ambient
5. Water from treatment plant
6. Giardia muris cysts
7. Assorted glassware
8. Assorted pipettes
9. Reagents and instruments for determining disinfectant residual
10. Sterile sodium thiosulfate solution
11. Vacuum filter device, for 47mm diameter filters
12. 1.0 µm pore size polycarbonate filters, 47 mm diameter
13. Vacuum source
14. Crushed ice and ice bucket
15. Timer

3. Materials for Excystation

1. Exposed and control Giardia muris cysts
2. Reducing solution
3. 0.1 M sodium bicarbonate
4. Trypsin-Tryode's solution
5. 15 ml conical screw cap centrifuge tubes
6. Water bath, 37°C
7. Warm air incubator or slide warming tray, 37°C
8. Aspirator flask
9. Vacuum source
10. Assorted pipettes
11. Vortex mixer
12. Centrifuge with swinging bucket rotor
13. Chamber slides
14. Phase contrast microscope
15. Differential cell counter
16. Timer

II. REAGENTS

A. Reducing Solution

Ingredient	Amount
glutathione (reduced form)	0.2 g
L-cysteine-HCl	0.2 g
1X Hanks' balanced salt solution	20.0 ml

Dissolve the dry ingredients in the 1X Hanks' balanced salt solution and warm to 37°C before use in the experiment. Prepare fresh, within 1 hour of use.

B. Sodium Bicarbonate Solution, 0.1 M

Ingredient	Amount
Sodium bicarbonate	0.42 g

Dissolve the salt in 10 to 15 ml distilled water. Adjust the volume to 50 ml with additional distilled water and warm to 37°C before use in the experiment. Prepare fresh, within 1 hour of use.

C. Sodium Bicarbonate Solution, 7.5%

Ingredient	Amount
Sodium bicarbonate	7.5 g

Dissolve the sodium bicarbonate in 50 ml distilled water. Adjust the volume to 100 ml with additional distilled water. Store at room temperature.

D. Sodium Thiosulfate Solution, 10%

Ingredient	Amount
Sodium thiosulfate	10.0 g

Dissolve the sodium thiosulfate in 50 ml distilled water. Adjust the volume to 100 ml with additional distilled water. Filter sterilize the solution through a 0.22 um porosity membrane or autoclave for 15 minutes at 121°C. Store at room temperature.

E. Tyrode's Solution, 20X

Ingredient	Amount
NaCl	160.0 g
KCl	4.0 g
$CaCl_2$	4.0 g
$MgCl_2 \cdot 6H_2O$	2.0 g
$NaH_2PO_4 \cdot H_2O$	1.0 g
Glucose	20.0 g

Dissolve the dry ingredients in the order listed in 750 ml distilled water. Adjust the volume to 1.0 liter with additional distilled water. If long term storage (up to 1 year) is desired, filter sterilize the solution through a 0.22 um porosity membrane.

F. Tyrode's Solution, 1X

Ingredient	Amount
20X Tyrode's solution	5.0 ml

Dilute 5 ml of the 20X Tyrode's solution to a final volume of 100 ml with distilled water.

G. Trypsin-Tyrode's Solution

Ingredient	Amount
Trypsin, 1:100, U.S. Biochemical Co.	0.50 g
$NaHCO_3$	0.15 g
1X Tyrode's solution	100.00 ml

With continuous mixing on a stirplate, gradually add 100 ml 1X Tyrode's solution to the dry ingredients. Continue stirring until the dry ingredients are completely dissolved. Adjust the pH of the solution to 8.0 with 7.5% $NaHCO_3$. Chill the trypsin Tyrode's solution to 4°C. NOTE: Trypsin lots must be tested for their excystation efficiency. Prepare fresh, within 1 hour of use.

H. Polyoxyethylene Sorbitan Monolaurate (Tween 20) Solution, 0.01% (v/v)

Ingredient	Amount
Tween 20	0.1 ml

Add the Tween 20 to 1.0 liter of distilled water. Mix well.

I. Vaspar

Ingredient	Amount
Paraffin	1 part
Petroleum jelly	1 part

Heat the two ingredients in a boiling water bath until melting and mixing is complete.

III. GIARDIA MURIS ASSAY

A. Cysts

Giardia muris cysts may be available from commercial sources. The cysts may be produced in Mongolian gerbils (*Meriones unguiculatus*) or in mice. *Mus musculus*, the laboratory mouse, CF-1, BALBc, and C3H/he strains have been used to produce *G. muris* cysts. The method is labor intensive and requires a good animal facility.

In order for the disinfection procedure to work properly, the *G. muris* cysts used must be of high quality. Evaluation of a cyst suspension is a subjective procedure involving aspects of morphology and microbial contamination as well as excystment. A good quality *G. muris* cyst preparation should exhibit the following:

1. Examine cyst stock suspension microscopically for the presence of empty cyst walls (ECW). Cyst suspensions containing equal to or greater than 1% ECW should not be used for determining inactivation at any required level. However, if a 99.9% level of disinfection inactivation is required, the stock cyst suspension must contain <0.1% ECW.

2. Excystation should be 90% or greater.

3. The cyst suspension should contain little or no detectable microbial contamination.

4. Good *G. muris* cysts are phase bright with a defined cyst wall, peritrophic space, and agranular cytoplasm. Cysts which are phase dark, have no detectable peritrophic space, and have a granular cytoplasm may be non-viable. There generally should be no more than 4 to 5% phase dark cysts in the cyst preparation.

   Good *G. muris* cyst preparations result when the following guidelines are followed during cyst purification from feces:

   a. Use feces collected over a period of 24 hours or less.

   b. The isolation of the cysts from the feces should be done immediately after the fecal material is collected.

   c. Initially, *G. muris* cysts should be purified from the fecal material by flotation using 1.0 M sucrose.

   d. If the *G. muris* cyst suspension contains an undesirable density of contaminants after the first sucrose float, further purification is necessary. Two methods for further purification are suggested.

      1) Cysts may be reconcentrated over a layer of 0.85 M sucrose in a 50 ml conical centrifuge tube. If this

second exposure to sucrose is not done quickly, high cyst losses can occur due to their increased bouyant density in the hyperosmotic sucrose medium. The cysts must be thoroughly washed free of the sucrose immediately after collection of the interface.

2) Cysts can be separated from dissimilar sized contaminants by sedimentation at unit gravity, which will not adversely affect cyst bouyant density, morphology, or viability.

B. Maintenance of Cysts

1. Preparation of stock suspension

Determine the suspension density of the G. muris cyst preparation using a hemocytometer (see Appendix A). Adjust the cyst suspension density with distilled water to approximately 3-5 x 10^6 cysts/ml.

2. Storage

Store cysts in distilled water in a refrigerator at 4°C. Cysts should not be used for disinfection experiments if they are more than 2 weeks old (from time of feces deposition).

C. Excystation Assay

A number of G. muris excystation procedures have been described in the scientific literature (see Bibliography, Section VI). Any of these procedures may be used provided 90% or greater excystation of control, undisinfected G. muris cysts is obtained. The following protocol is used to evaluate the suitability of cysts in the stock suspension, and to determine excystation in control and disinfected cysts.

1. For evaluating a cyst suspension or for running an unexposed control, transfer 5 x 10^5 G. muris cysts from the stock preparation to a 15 ml conical screw cap centrifuge tube. An unexposed control should be processed at the same time as the disinfectant exposed cysts.

2. Reduce the volume of G. muris cyst suspension in each 15 ml centrifuge tube to 0.5 ml or less by centrifugation at 400 x g for 2 minutes. Aspirate and discard the supernatant to no less than 0.2 ml above the pellet.

3. Add 5 ml reducing solution, prewarmed to 37°C, to each tube.

4. Add 5 ml 0.1 M $NaHCO_3$, prewarmed to 37°C, to each tube. NOTE: Tightly close the caps to prevent the loss of CO_2. If the CO_2 escapes, excystation will not occur.

5. Mix the contents of each tube by vortexing and place in a 37°C water bath for 30 minutes.

6. Remove the tubes from the water bath and centrifuge each for 2 minutes at 400 x g.

7. Aspirate and discard the supernatant to no less than 0.2 ml above the pellet and resuspend the pellet in each tube in 10 ml trypsin-Tyrode's solution chilled to 4°C.

8. Centrifuge the tubes for 2 minutes at 400 x g.

9. Aspirate and discard the supernatant to no less than 0.2 ml above the pellet.

10. Add 0.3 ml trypsin-Tyrode's solution, prewarmed to 37°C, to each tube. Resuspend the G. muris cysts by low speed vortexing.

11. Prepare a chamber slide for each tube (see Appendix B).

12. Seal the coverslip on each chamber slide with melted vaspar and incubate at 37°C for 30 minutes in an incubator or on a slide warmer.

13. After incubation, place a chamber slide on the stage of an upright phase contrast microscope. Focus on the slide with a low power objective. Use a total magnification of 400X or more for the actual quantitation. NOTE: Be careful to keep the objectives out of the vaspar.

14. While scanning the slide and using a differential cell counter, enumerate the number of empty cyst walls (ECW), partially excysted trophozoites (PET), and intact cysts (IC) observed (see Section V for a further description of these forms and the method for calculating percentage excystation). If the percentage excystation in the stock suspension is not 90% or greater, do not continue with the disinfection experiment.

IV. DISINFECTION PROCEDURES FOR GIARDIA

A. The treatment plant water to be used should be the water influent into the chloramine disinfection unit process used in the plant. If chloramine disinfection is performed at more than one point in the treatment process, e.g., prefiltration and postfiltration, the procedure should simulate as closely as possible actual treatment practice.

B. Prepare stock ammonia and chlorine solutions to be added to the treatment plant water to achieve the same stoichiometric relationship between chlorine and ammonia that is used in the water treatment plant. These solutions should be concentrated enough so that no more than 2 ml of each solution will be added to the treatment plant water being disinfected.

C. Determine the contact time by the methods described in the Surface Water Treatment Rule and/or the associated Guidance Manual.

D. Rinse a 600 ml beaker with treatment plant water to remove any extraneous material that may cause disinfectant demand. Then add 400 ml treatment plant water to the beaker.

E. Mix the contents of the beaker short of producing a vortex in the center and continue until the conclusion of the experiment.

F. Equilibrate the 600 ml beaker and its contents as well as the disinfectant reagents to the desired experimental temperature.

G. Adjust the stock G. muris cyst suspension with distilled water so that the concentration is 2-5 x 10^5 cysts/ml.

H. Add 0.5 ml of the adjusted cyst suspension to the contents of the 600 ml beaker.

I. Add the disinfectant reagents to the beaker using the same reagents, the same sequence of addition of reagents, and the same time interval between addition of reagents that is used in the disinfection procedure in the treatment plant.

J. Just prior to the end of the exposure time, remove a sample adequate for determination of the disinfectant residual concentration. Use methods prescribed in the Surface Water Treatment Rule for the determination of combined chlorine. This residual should be the same (±20%) as residual present in the treatment plant operation.

K. At the end of the exposure time, add 1.0 ml 10% sodium thiosulfate solution to the contents of the 600 ml beaker.

L. Concentrate the G. muris cysts in the beaker by filtering the entire contents through a 1.0 µm porosity 47 mm diameter polycarbonate filter.

M. Place the filter, cyst side up, on the side of a 150 ml beaker. Add 10 ml 0.01% Tween 20 solution to the beaker. Using a Pasteur pipette, wash the G. muris cysts from the surface of the filter by aspirating and expelling the 0.01% Tween 20 solution over the surface of the filter.

N. Transfer the contents of the 150 ml beaker to an appropriately labeled 15 ml screw cap conical centrifuge tube.

O. Keep the tube on crushed ice until the excystation assay is performed (see Section III, C) on the disinfectant exposed cysts and on an unexposed control preparation obtained from the stock cyst suspension.

V. PROCEDURE FOR DETERMINING INACTIVATION

A. *Giardia muris* Excystation Quantitation Procedure

The percentage excystation is calculated using the following formula:

$$\% \text{ excystation} = \frac{ECW + PET}{ECW + PET + IC} \times 100,$$

where ECW is the number of empty cyst walls,

PET is the number of partially excysted trophozoites, and

IC is the number of intact cysts.

An ECW is defined as a cyst wall which is open at one end and is completely devoid of a trophozoite. A PET is a cyst which has started the excystation process and progressed to the point where the trophozoite has either started to emerge or has completely emerged and is still attached to the cyst wall. An IC is a trophozoite which is completely surrounded with a cyst wall showing no evidence of emergence. For the control, generally 100 forms are counted to determine the percent excystation.

The number of cysts that must be observed and classified (ECW, PET, IC) in the disinfected sample is dependent on the level of inactivation desired and on the excystation percentage obtained in the control.

For 0.5, 1 and 2 $\log_{10}$ reductions, (68%, 90% and 99% inactivation, respectively), the minimum number of cysts to be observed and classified is determined by dividing 100 by the percentage excystation (expressed as a decimal) obtained in the control.

For a 3 $\log_{10}$ reduction (99.9% inactivation) the minimum number of cysts to be observed and classified is determined by dividing 1,000 by the percentage excystation (expressed as a decimal) obtained in the control.

B. Determining Inactivation

The amount of inactivation is determined by comparing the percentage excystation of the exposed cyst preparation to the percentage excystation in the control preparation using the following formula:

$$\% \text{ inactivation} = 100\% - [(\text{exposed } \% \text{ excysted}/\text{control } \% \text{ excysted}) \times 100]$$

If the percentage excystation in the exposed preparation is zero, i.e., only IC (no ECW or PET) are observed and counted, use <1 as the value for "exposed % excysted" in the formula for calculating % inactivation.

VI. BIBLIOGRAPHY

American Public Health Association; American Water Works Association; Water Polution Control Federation. Standard Methods for the Examination of Water and Wastewater, 16th ed. (1985).

Belosevic, M. & G.M. Faubert. Giardia muris: correlation between oral dosage, course of infection, and trophozoite distribution in the mouse small intestine. Exp. Parasitol., 56:93 (1983).

Erlandsen, L.S. and E.A. Meyer. Giardia and Giardiasis. Plenum Press, New York, (1984).

Faubert, G.M. et al. Comparative studies on the pattern of infection with Giardia spp. in Mongolian gerbils. J. Parasitol., 69:802 (1983).

Feely, D.E. A simplifed method for in vitro excystation of Giardia muris. J. Parasitol., 72:474-475 (1986).

Feely, D.E. Induction of excystation of Giardia muris by CO_2. 62nd Annual Meeting of the American Society of Parasitologists, Lincoln, Nebraska, Abstract No. 91 (1987).

Gonzalez-Castro, J., Bermejo-Vicedo, M.T. and Palacios-Gonzalez, F. Desenquistamiento y cultivo de Giardia muris. Rev. Iber. Parasitol., 46:21-25 (1986).

Melvin, D.M. and M.M. Brooke. Laboratory Procedures for the Diagnosis of Intestinal Parasites. 3rd ed., HHS Publication No. (CDC) 82-8282 (1982).

Miale, J.B. Laboratory Medicine Hematology, 3rd ed. C. V. Mosby Company, St. Louis, Missouri (1967).

Roberts-Thomson, I.C. et al. Giardiasis in the mouse: an animal model. Gastroenterol., 71:57 (1976).

Sauch, J.F. Purification of Giardia muris cysts by velocity sedimentation. Appl. Environ. Microbiol., 48:454 (1984).

Sauch, J.F. A new method for excystation of Giardia. Advances in Giardia Research. University of Calgary, Calgary, Canada (In Press).

Schaefer, III, F.W., Rice, E.W., & Hoff, J.C. Factors promoting In vitro excystation of Giardia muris cysts. Trans. Roy. Soc. Trop. Med. Hyg., 78:795 (1984).

VII. TECHNICAL CONTACTS:

A. Eugene W. Rice
Microbiological Treatment Branch
Risk Reduction Engineering Laboratory
U.S. Environmental Protection Agency
26 West Martin Luther King Drive
Cincinnati, Ohio 45268

Phone: (513) 569-7233

B. Frank W. Schaefer, III
Parasitology and Immunology Branch
Environmental Monitoring Systems Laboratory
U.S. Environmental Protection Agency
26 West Martin Luther King Drive
Cincinnati, Ohio 45268

Phone: (513) 569-7222

Appendix A: Use of the Hemocytometer

Suspension Density Determination Using the Improved Neubauer (Bright-line) Hemocytometer

The hemocytometer consists of two chambers separated by a transverse trench and bordered bilaterally by longitudinal trenches. Each chamber is ruled and consists of nine squares, each 1 x 1 x 0.1 mm with a volume of 0.1 mm^3. Each square mm is bordered by a triple line. The center line of the three is the boundary line of the square. (See Figure 1).

According to the U. S. Bureau of Standards' requirements, the cover glass must be free of visible defects and must be optically plane on both sides within plus or minus 0.002 mm. ONLY HEMOCYTOMETER COVER GLASSES MAY BE USED. ORDINARY COVER GLASSES AND SCRATCHED HEMOCYTOMETERS ARE UNACCEPTABLE, as they introduce errors into the volume relationships.

The suspension to be counted must be evenly distributed and free of large debris, so that the chamber floods properly. The suspension to be counted should contain 0.01% Tween 20 solution to prevent Giardia cysts from sticking and causing improper hemocytometer chamber flooding. Cyst suspensions should be adjusted so that there are a total of 60 to 100 cysts in the four corner counting squares. Counts are statistically accurate in this range. If the suspension is too numerous to be counted, then it must be diluted sufficiently to bring it into this range. In some cases, the suspension will be too dilute after concentration to give a statistically reliable count in the 60-100 cyst range. There is nothing that can be done about this situation other than to record the result as questionable.

To use the hemocytometer:

1. Dilute or concentrate the suspension as required.

2. Apply a clean cover glass to the hemocytometer and load the hemocytometer chamber with 8-10 µl of vortexed suspension per chamber. If this operation has been properly executed, the liquid should amply fill the entire chamber without bubbles or overflowing into the surrounding moats. Repeat this step with a clean, dry hemocytometer and cover glass, if loading has been incorrectly done. See step (12) below for the hemocytometer cleaning procedure.

3. Do not attempt to adjust the cover glass, apply clips, or in any way disturb the chamber after it has been filled. Allow the Giardia cysts to settle 30 to 60 seconds before starting the count.

4. The Giardia cysts may be counted using a magnification 200-600X.

5. Move the chamber so the ruled area is centered underneath it.

6. Then, locate the objective close to the cover glass while watching it from the side of rather than through the microscope.

7. Focus up from the coverslip until the hemocytometer ruling appears.

8. At each of the four corners of the chamber is a 1 mm^2 divided into 16 squares in which Giardia cysts are to be counted (see Figure 1). Beginning with the top row of four squares, count with a hand tally counter in the directions indicated in Figure 2. Avoid counting Giardia cysts twice by counting only those touching the top and left boundary lines and none of those touching the lower and right boundary lines. Count each square mm in this fashion.

9. The formula for determining the number of Giardia cysts per ml suspension is:

$$\frac{\text{\# of cysts counted}}{\text{\# of sq. mm counted}} \times \frac{10}{1\ \text{mm}} \times \frac{\text{dilution factor}}{1} \times \frac{1{,}000\ \text{mm}^3}{1\ \text{ml}} = \text{\# cysts/ml}$$

10. Record the result on a data sheet similar to that shown in Figure 3.

11. A total of six different hemocytometer chambers must be loaded, counted, and then averaged for each Giardia cyst suspension to achieve optimal counting accuracy.

12. After each use, the hemocytometer and coverslip must be cleaned immediately to prevent the cysts and debris from drying on it. Since this apparatus is precisely machined, abrasives cannot be used to clean it as they will disturb the flooding and volume relationships.

    a. Rinse the hemocytometer and cover glass first with tap water, then 70% ethanol, and finally with acetone.

    b. Dry and polish the hemocytometer chamber and cover glass with lens paper. Store it in a secure place.

13. A number of factors are known to introduce errors into hemocytometer counts. These include:

    a. Inadequate suspension mixing before flooding the chamber.

    b. Irregular filling of the chamber, trapped air bubbles, dust, or oil on the chamber or coverslip.

    c. Chamber coverslip not flat.

    d. Inaccurately ruled chamber.

    e. The enumeration procedure. Too many or too few Giardia cysts per square, skipping or recounting some Giardia cysts.

f. Total number of Giardia cysts counted is too low to give statistical confidence in result.

g. Error in recording tally.

h. Calculation error; failure to consider dilution factor, or area counted.

i. Inadequate cleaning and removal of cysts from the previous count.

j. Allowing filled chamber to sit too long so that chamber suspension dries and concentrates.

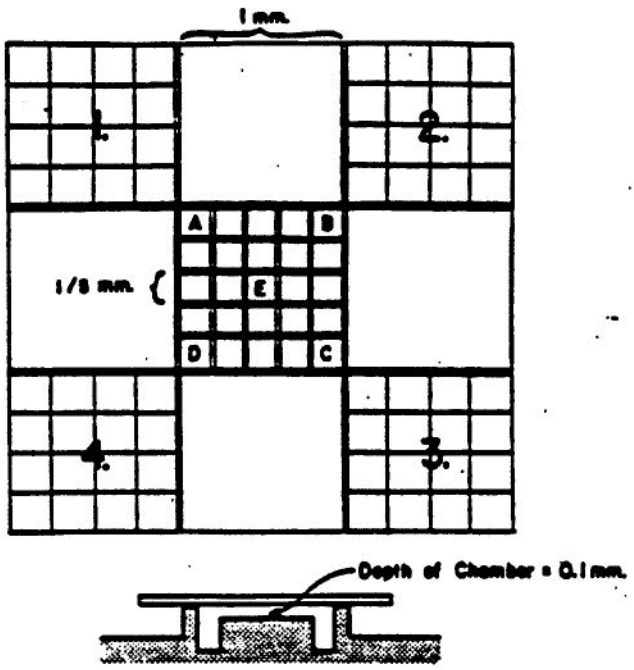

Figure 1. Hemocytometer platform ruling. Squares 1, 2, 3, and 4 are used to count Giardia cysts. (From Miale, 1967)

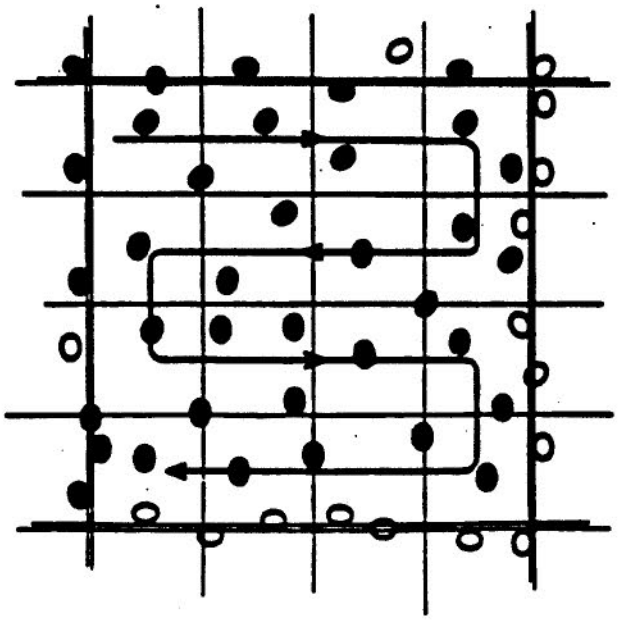

Figure 2. Manner of counting Giardia cysts in 1 square mm. Dark cysts are counted and light cysts are omitted. (After Miale, 1967)

Date	Person Counting	Count #	# Cells Counted	# mm^2 Counted	Dilution Factor	# Cysts* / ml	Remarks
		1					
		2					
		3					
		4					
		5					
		6					
		7					
		8					
		9					
		10					
		11					
		12					
		13					
		14					
		15					
		16					
		17					
		18					
		19					
		20					

$$*\#\ \text{cysts/ml} = \frac{\#\ \text{of cysts counted}}{\#\ \text{of sq. mm counted}} \times \frac{10}{1\ \text{mm}} \times \frac{\text{dilution factor}}{1} \times \frac{1{,}000\ \text{mm}^3}{1\ \text{ml}}$$

Figure 3. Hemocytometer Data Sheet for Giardia Cysts

Appendix B. Preparation and Loading of Excystation Chamber Slides

1. Using tape which is sticky on both sides, cut strips approximately 12 x 3 mm.

2. Apply a strip of the tape to one side of a 22 x 22 mm coverslip.

3. Apply a second strip of tape to the opposite edge but same side of the coverslip.

4. Handling the coverslip by the edges only, attach the coverslip to the center of a 3 x 1 inch glass slide by placing the taped sides of the coverslip down along the long edge of the glass slide.

5. Make sure the coverslip is securely attached to the slide by lightly pressing down on the edges of the coverslip with your fingers. Care should be taken to keep finger prints off the center of the coverslip.

6. To load the chamber slide, place a Pasteur or microliter pipette containing at least 0.2 ml of the Giardia cyst suspension about 2 mm from an untaped edge of the coverslip. Slowly allow the cyst suspension to flow toward the coverslip. As it touches the coverslip it will be wicked or drawn rapidly under the coverslip by adhesive forces. Only expell enough of the cyst suspension to completely fill the chamber formed by the tape, slide, and coverslip.

7. Wipe away any excess cyst suspension which is not under the coverslip with an absorbant paper towel, but be careful not to pull cyst suspension from under the coverslip.

8. Seal all sides of the coverslip with vaspar to prevent the slide from drying out during the incubation.

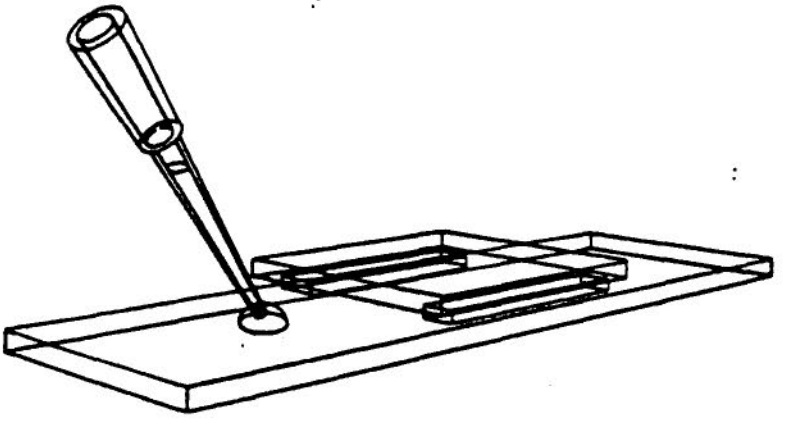

Figure 1. Excystation Chamber Slide

NOTE: Prepared excystation chamber slides may be commercially available from Spiral Systems, Inc., 6740 Clough Pike, Cincinnati, Ohio 45244, (513) 231-1211 or 232-3122, or from other sources.

APPENDIX G-2

DETERMINING CHLORAMINE INACTIVATION OF VIRUS FOR THE SURFACE WATER TREATMENT RULE

Microbiological Treatment Branch
Risk Reduction Engineering Laboratory

and

Parasitology and Immunology Branch
Environmental Monitoring Systems Laboratory
U.S. Environmental Protection Agency
26 West Martin Luther King Drive
Cincinnati, Ohio 45268

TABLE OF CONTENTS

I. Materials.....3

II. Reagents and Media.....4

III. MS2 Bacteriophage Assay.....6

IV. Disinfection Procedure.....8

V. Procedure for Determining Inactivation.....9

VI. Bibliography.....10

VII. Technical Contacts.....11

The Surface Water Treatment Rule requires 99.99% or greater removal/inactivation of viruses. The following protocol may be used to determine the percentage of virus inactivation obtained by a treatment plant using chloramine disinfection.

I. MATERIALS

A. Materials for Disinfection

1. Stock chlorine solution
2. Stock ammonia solution
3. Stirring device
4. Incubator or water bath for less than ambient temperature
5. Water from treatment plant
6. MS2 bacteriophage
7. Assorted glassware
8. Assorted pipettes
9. Aqueous, sterile sodium thiosulfate solution
10. Refrigerator
11. Vortex mixer
12. Timer

B. Materials for MS2 Assay

1. MS2 bacteriophage and its *Escherichia coli* host
2. Assorted glassware
3. Assorted pipettes
4. Incubator, 37°C
5. Refrigerator
6. Petri dishes, 100 x 15 mm, sterile
7. Vortex mixer
8. Water bath, 45°C
9. Sterile rubber spatula
10. EDTA, disodium salt
11. Lysozyme, crystallized from egg white
12. Centrifuge with swinging bucket rotor

II. REAGENTS AND MEDIA

A. Tryptone-Yeast Extract (TYE) Broth

Ingredient	Amount
Bacto tryptone	10.0 g
Yeast extract	1.0 g
Glucose	1.0 g
NaCl	8.0 g
1.0 M $CaCl_2$	2.0 ml

Dissolve in distilled water to a total volume of 1.0 liter, then add 0.3 ml of 6.0 M NaOH. This medium should be sterilized either by autoclaving for 15 minutes at 121°C or filtration through a 0.22 um porosity membrane and then stored at approximately 4°C. It is used in preparing bacterial host suspensions for viral assays.

B. Tryptone-Yeast Extract (TYE) Agar

Ingredient	Amount
TYE broth	1.0 liter
Agar	15.0 g

The agar should be added to the broth prior to sterilization. The medium should be sterilized by autoclaving for 15 minutes at 121°C. This medium is used to prepare slant tubes for maintenance of bacterial stock cultures. The prepared slant tubes should be stored at approximately 4°C.

C. Bottom Agar for Bacteriophage Assay

Ingredient	Amount
Bacto tryptone	10.0 g
Agar	15.0 g
NaCl	2.5 g
KCl	2.5 g
1.0 M $CaCl_2$	1.0 ml

Dissolve the ingredients in distilled water to a total volume of 1 liter. The medium should be sterilized by autoclaving for 15 minutes at 121°C. After autoclaving and cooling, store at 4°C. Immediately prior to use, liquefy the medium by heating. Add approximately 15 ml of liquefied agar into each Petri dish. This bottom layer serves as an anchoring substrate for the top agar layer.

D. Top Agar for Bacteriophage Assay

Ingredient	Amount
Bacto tryptone	10.0 g
Agar	8.0 g
NaCl	8.0 g
Yeast extract	1.0 g
Glucose	1.0 g
1.0 M $CaCl_2$	1.0 ml

Dissolve the ingredients in distilled water to a total volume of 1 liter. This medium should be sterilized by autoclaving 15 minutes at 121°C. After cooling, store at 4°C until needed in bacteriophage assays. Immediately prior to use in assays, liquefy the medium by heating and then cool to and maintain at a temperature of 45°C.

E. Salt Diluent for Bacteriophage Assay

Ingredient	Amount
NaCl	8.5 g
1.0 M $CaCl_2$	2.0 ml

Dissolve in distilled water to a total volume of 1 liter. This diluent should be sterilized either by autoclaving for 15 minutes at 121°C or filtration through a 0.22 µm porosity membrane. Store at room temperature.

F. $CaCl_2$, 1.0 M

Ingredient	Amount
$CaCl_2$	11.1 g

Dissolve in distilled water to a total volume of 100 ml. Autoclave 15 minutes at 121°C or filter sterilize the solution through a 0.22 µm porosity membrane. Store at room temperature.

G. Sodium Thiosulfate, 1%

Ingredient	Amount
Sodium thiosulfate	1.0 g

Dissolve the sodium thiosulfate in 50 ml distilled water. Adjust the volume to 100 ml with additional distilled water. Filter sterilize the solution through a 0.22 µm porosity membrane or autoclave 15 minutes at 121°C. Store at room temperature.

III. MS2 BACTERIOPHAGE ASSAY

A. Microorganisms

1. MS2 bacteriophage: catalog number 15597-B1, American Type Culture Collection, 12301 Parklawn Drive, Rockville, MD 20852

2. Bacterial host: Escherichia coli, catalog number 15597, American Type Culture Collection.

B. Growth and Maintenance of Microorganisms

1. Preparation of bacterial host stock cultures

Inoculate host bacteria onto TYE agar slant tubes, incubate 24 hours at 37°C to allow bacterial growth, and then refrigerate at 4°C. At monthly intervals the cultured bacterial hosts should be transferred to a new TYE agar slant.

2. Preparation of bacteriophage stock suspension

Melt top agar and maintain at 45°C. Add 3 ml of the agar to a 13 x 100 mm test tube contained in a rack in a 45°C water bath. Add 0.5 to 1.0 ml of the bacteriophage suspension diluted so that the host bacterial "lawn" will show nearly complete lysis after overnight incubation. Add 0.1 to 0.2 ml of a TYE broth culture of the host bacteria that has been incubated overnight. Mix gently and pour the contents on the surface of bottom agar contained in a Petri dish that has been prepared previously. Rock the Petri dish to spread the added material evenly over the agar surface. After the top agar solidifies (about 15 minutes), invert the Petri dish and incubate overnight at 37°C. Repeat the above procedure so that a minimum of 5 but no more than 10 Petri dishes are prepared.

Following this incubation and using a sterile rubber spatula, gently scrape the top and bottom agar layers into a large beaker. Add to this pool of agar layers an amount of TYE broth sufficient to yield a total volume of 80 ml. To this mixture add 0.4 g of EDTA (disodium salt) and 0.052 g of lysozyme (crystallized from egg white). Incubate this mixture at room temperature for 2 hours with continuous mixing. Then centrifuge the mixture for 15 minutes at 3,000 x g. Carefully remove the upper fluid layer. This fluid layer constitutes a viral stock suspension for use in subsequent testing and assays. The viral stock suspension may be divided into aliquots and stored either frozen or at 4°C.

C. Performance of Bacteriophage Assay

A two-week supply of Petri dishes may be poured with bottom agar ahead of time and refrigerated inverted at 4°C. If stored in a refrigerator, allow agar plates to equilibrate to room temperature

before use. Eighteen hours prior to beginning a bacteriophage assay, prepare a bacterial host suspension by inoculating 5 ml of TYE broth with a small amount of bacteria taken directly from a slant tube culture. Incubate the broth containing this bacterial inoculum overnight (approximately 18 hours) at 37°C immediately prior to use in bacteriophage assays as described below. This type of broth culture should be prepared freshly for each day's bacteriophage assays. If necessary, a volume greater than 5 ml can be prepared in a similar manner.

On the day of assay, melt a sufficient amount of top agar and maintain at 45°C in a water bath. Place test tubes (13 x 100 mm) in a rack in the same water bath and allow to warm, then add 3 ml of top agar to each tube. Inoculate the test tubes containing top agar with the bacteriophage samples (0.5 to 1.0 ml of the sample/tube) plus 0.1 to 0.2 ml of the overnight bacterial host suspension. Dilute the bacteriophage samples from 10^{-1} to 10^{-4} in salt diluent prior to inoculation and assay each dilution in triplicate. In addition, assay the uninoculated salt diluent as a negative control. Agitate the test tubes containing top agar, bacteriophage inoculum, and bacterial host suspension gently on a vortex mixer, and pour the contents of each onto a hardened bottom agar layer contained in an appropriately numbered dish. Quickly rock the Petri dishes to spread the added material evenly, and place on a flat surface at room temperature while the agar present in the added material solidifies (approximately 15 minutes). Invert and incubate the dishes at 37°C overnight (approximately 18 hours). The focal areas of viral infection which develop during this incubation are referred to as "plaques" and, if possible, should be enumerated immediatly after the incubation. If necessary, the incubated Petri dishes can be refrigerated at 4°C overnight prior to plaque enumeration. As a general rule, count only those plates that contain between 20 and 200 plaques.

IV. DISINFECTION PROCEDURE

A. The treatment plant water to be used should be the water influent into the chloramine disinfection unit process used in the plant. If chloramine disinfection is performed at more than one point in the treatment process, e.g. prefiltration and postfiltration, the procedure should simulate as closely as possible actual treatment practice.

B. Prepare stock ammonia and chlorine solutions to be added to the treatment plant water to achieve the same stoichiometric relationship between chlorine and ammonia that is used in the water treatment plant. These solutions should be concentrated enough so that no more than 2 ml of each solution will be added to the treatment plant water being disinfected.

C. Determine the contact time by the methods described in the Surface Water Treatment Rule and/or the associated Guidance Manual.

D. Rinse two 600 ml beakers with treatment plant water to remove any extraneous material that may cause disinfectant demand. Then add 400 ml treatment plant water to the beaker. The first beaker will be seeded with MS2 before the contents are chloraminated. The second beaker will be an indigenous virus control and will be chloraminated without addition of extraneous phage.

E. Mix the contents of the beaker short of producing a vortex in the center and continue until the conclusion of the experiment.

F. Equilibrate the 600 ml beakers and their contents as well as the disinfectant reagents to the desired experimental temperature.

G. Dilute the stock MS2 bacteriophage so that the bacteriophage concentration is 1 to 5 x 10^8 PFU/ml.

H. Add 1.0 ml of the diluted MS2 bacteriophage to the contents of the first 600 ml beaker.

I. Remove a 10 ml sample from the contents of the first beaker after 2 minutes of mixing. Assay the MS2 bacteriophage concentration in this sample within 4 hours and record the results as PFU/ml. This value is the initial MS2 concentration.

J. Remove a 10 ml sample from the contents of the second beaker after 2 minutes of mixing. Assay the indigenous bacteriophage concentration in this sample within 4 hours (at the same time as you assay the sample from the first beaker) and record the results as PFU/ml. This value is the initial unseeded concentration.

K. Add the disinfectant reagents to the contents of both beakers using the same sequence, time, and concentrations as are used in the actual treatment plant operations.

L. Just prior to the end of the contact time, remove a volume of sample adequate for determination of the disinfectant residual concentration from both beakers. Use methods prescribed in the Surface Water Treatment Rule for the determination of combined chlorine. This residual should be the same (±20%) as the residual present in the treatment plant operation.

M. At the end of the exposure time, remove a 10 ml sample from the first 600 ml beaker and neutralize with 0.25 ml of 1.0% aqueous, sterile sodium thiosulfate. Assay for the MS2 bacteriophage survivors and record the results as PFU/ml. This value is the exposed MS2 concentration.

N. At the end of the exposure time, remove a 10 ml sample from the second 600 ml beaker and neutralize with 0.25 ml of 1.0% aqueous, sterile sodium thiosulfate. Assay for the indigenous bacteriophage survivors and record the results as PFU/ml. This value is the exposed unseeded concentration.

V. PROCEDURE FOR DETERMINING INACTIVATION

A. Calculation of Percentage Inactivation

Use the following formula to calculate the percent inactivation of MS2:

1. % inactivation = 100% - [(exposed MS2/initial MS2) x 100]

Using values from Section IV steps I, J, M and N calculate initial MS2 and exposed MS2 as follows:

2. Initial MS2 (PFU/ml) = I - J.

3. Exposed MS2 (PFU/ml) = M - N.

If the number of PFU/ml in exposed MS2 is zero, i.e., no plaques are produced after assay of undiluted and diluted samples, use <1 PFU/ml as the value in the above formula.

B. Comparison of Percentage Inactivation to Log_{10} of Inactivation

68% inactivation is equivalent to 0.5 log_{10} inactivation
90% inactivation is equivalent to 1 log_{10} inactivation
99% inactivation is equivalent to 2 log_{10} inactivation
99.9% inactivation is equivalent to 3 log_{10} inactivation

VI. BIBLIOGRAPHY

Adams, M.H. Bacteriophages. Interscience Publishers, New York (1959).

American Public Health Association; American Water Works Association; Water Pollution Control Federation. Standard Methods for the Examination of Water and Wastewater, 16th ed. (1985).

Grabow, W.O.K. et al. Inactivation of hepatitus A virus, other enteric viruses and indicator organisms in water by chlorination. Water Sci. Technol., 17:657 (1985)

Jacangelo, J.D.; Olivieri, V.P.; & Kawata, K. Mechanism of inactivation of microorganisms by combined chlorine. AWWARF Rept., Denver, CO (1987).

Safe Drinking Water Committee. The disinfection of drinking water. In: Drinking Water and Health, National Academy Press, Washington, D.C., 2:5 (1980).

Shah, P. & McCamish, J. Relative resistance of poliovirus 1 and coliphages f_2 and T2 in water. Appl. Microbiol. 24:658 (1972).

U.S. Environmental Protection Agency. Guidance Manual for Compliance with the Filtration and Disinfection Requirements for Public Water Systems Using Surface Water Sources. Appendix G. U.S. EPA, Office of Water, Criteria and Standards Division, Washington, D.C. (1988).

Ward, N.R.; Wolfe, R.L.; & Olson, B.H. Effect of pH, application technique, and chlorine-to-nitrogen ratio on disinfectant activity of inorganic chloramines with pure culture bacteria. Appl. Environ. Microbiol., 48:508 (1984).

VII. TECHNICAL CONTACTS:

A. Donald Berman
Microbiological Treatment Branch
Risk Reduction Engineering Laboratory
U.S. Environmental Protection Agency
26 West Martin Luther King Drive
Cincinnati, Ohio 45268

Phone: (513) 569-7235

B. Christon J. Hurst
Microbiological Treatment Branch
Risk Reduction Engineering Laboratory
U.S. Environmental Protection Agency
26 West Martin Luther King Drive
Cincinnati, Ohio 45268

Phone: (513) 569-7331

G.3 DETERMINING CHLORINE DIOXIDE INACTIVATION OF GIARDIA CYSTS AND VIRUS

Giardia Cysts

The basis for the chlorine dioxide CT values for Giardia cysts in the Guidance Manual is given in Appendix F.1.2. The CT values are based on data collected mainly at pH 7. Very little data was available at other pHs. A review of data from Hoff (1986) indicates that the disinfection efficiency of chlorine dioxide for bacteria and viruses increases approximately 2 to 3 fold as pH increases from 7 to 9. Data on which the CT values in the SWTR are based indicate that at 25 C, G. muris cyst inactivation CTs were approximately 2 fold higher at pH 7 than at pH 9 (Leahy, 1985). In addition, the data also indicate that chlorine dioxide efficiency increases as disinfectant concentration increases within the range studied.

Because the data on effects of chlorine dioxide concentration and water pH on Giardia cyst inactivation efficiency were very limited, they were not considered in calculating the Giardia cyst CT values in Appendix E. However, the data suggest that site specific conditions, i.e. water pH and disinfectant concentration, can have significant effects on chlorine dioxide effectiveness. Therefore, the option of allowing the Primacy Agency to consider the use of lower CT values by individual systems has been provided.

This approval should be based on acceptable experimental data provided by the system. The data should be collected using the protocol provided in Appendix G-1 for determining Giardia cyst inactivation by chloramine with appropriate changes in Section IV A, B, I and J to reflect the use of chlorine dioxide rather than chloramines. This procedure can be used for any disinfectant which can be prepared in an aqueous solution and is stable over the course of the testing. To do this, chloramine should be replaced with the test disinfectant in the above noted sections.

Virus

The basis for the chlorine dioxide CT values for virus in Appendix F.2.2 consists of limited data from Sobsey (1988). Because the pH 9 data available were very limited, the CT values are based on the pH 6 data with a safety factor of 2 applied. As indicated previously, review of data from a number of studies (Hoff, 1986) shows that chlorine dioxide efficiency increases 2 to 3 fold as pH increases from 7 to 9.

Because the virus CT values for chlorine dioxide are very conservative and most systems operate at water pHs higher than those on which the CT values are based, the option of allowing the Primacy Agency to consider the use of lower CT values has been provided.

This approval should be based on acceptable experimental data provided by the system. The data should be collected using the protocol provided in Appendix G.2 with appropriate changes in Sections I A,1 and 2 and IV A, B, D, K, and L to reflect the use of chlorine dioxide rather than chloramines. This procedure can be used for any disinfectant which can be prepared in an aqueous solution and is stable over the course of the testing. To do this, chloramine should be replaced with the test disinfectant in the above noted sections.

REFERENCES

Hoff, J.C. Inactivation of Microbial Agents By Chemical Disinfectant's, EPA/600/52-86/067, U.S. Environmental Protection Agency, Water Engineering Research Laboratory, Cincinnati, Ohio, September, 1986.

Leahy, J.G. Inactivation of Giardia Muris Cysts by Chlorine and Chlorine Dioxide. Thesis, Department of Civil Engineering, Ohio State University, 1985.

Sobsey, M.D. Detection and Chlorine Disinfection of Hepatitis A Virus in Water. CR813024, EPA Quarterly Report, Dec. 1988.

G.4 DETERMINING OZONE INACTIVATION OF GIARDIA CYSTS AND VIRUS

G.4.1 BACKGROUND

The basis for the ozone CT values are given in Appendices F.1.2 (Giardia cysts) and F.2.4 (Virus). As indicated, both sets of CT values are based on limited data and because of this, the values established are conservative and employ large safety factors. In addition, the difference between the way the laboratory experiments used to develop the CT values and how ozone is used in water treatment presents a problem with translating the data for field use. The laboratory studies were conducted using steady state ozone concentrations with ozone continually added during the contact period. In contrast, steady state ozone concentrations are not maintained in field use. Also, the effectiveness of ozone contactors used in field applications may vary from each other and from the mixing efficiencies applied in the laboratory experiments used to establish the CT values.

The net effect of all of these differences is to limit the applicability of the CT values in the SWTR and Guidance Manual to individual systems. Therefore, the option of allowing the Primacy Agency to consider the use of lower CT values by individual systems has been provided.

This approval should be based on acceptable experimental data provided by the system. In general, the procedures provided in Appendix G.1 for determining Giardia cyst inactivation and Appendix G.2 for determining virus inactivation can be used. However, unlike chloramines ozone is not a stable disinfectant. Because of ozone's rapid dissipation, a pilot study must be used in lieu of the batch system to demonstrate the disinfection efficiency. General considerations for conducting pilot studies to demonstrate the disinfection ability of ozone or any other unstable disinfectant are enumerated below.

G.4.2 GENERAL CONSIDERATIONS FOR PILOT TEST

A. All microorganisms, reagents and media are prepared as indicated in sections G.1 for Giardia and G.2 for virus.

B. The disinfectant should be prepared, measured and added to the test water as it would be added to the water at the water treatment plant.

C. Specific reactor design should be a function of the disinfectant and reflect how the disinfectant is added at the water treatment plant. Provisions should be made to determine concentration of disinfectant and microbial survival to be measured with contact time.

An example of conducting a pilot test for a plug flow reactor using ozone or another unstable disinfectant is provided below.

Example - Plug Flow Reactor Protocol

The size of the plug flow reactor can be approximated from the table below. Glass, stainless steel, copper, plastic tubing or other material compatible with the disinfectant can be used to construct the plug flow reactor. Table 1 shows the approximate length of pipe for a plug flow reactor to yield 10 minutes contact at flow rates between 50 and 500 ml/min. Depending on pipe size and material an economical reactor can be constructed.

TABLE 1. APPROXIMATE LENGTH AND DIAMETER OF PIPE BASED ON FLOW

				LINEAR PIPE LENGTH, METERS NOMINAL PIPE DIAMETER, CM				
FLOW	TIME	VOLUME		0.6	1.2	1.8	2.54	3.81	5.08
ml/min	MIN.	LITERS	CC	0.28	1.31	2.54	5.07	11.40	20.27
50	10	0.5	500	17.7	4.4	2.0	1.0	0.4	0.2
100	10	1	1000	35.4	8.8	3.9	2.0	0.9	0.5
200	10	2	2000	70.7	17.7	7.9	3.9	1.8	1.0
300	10	3	3000	106.1	26.5	11.8	5.9	2.6	1.5
400	10	4	4000	141.5	35.4	15.7	7.9	3.5	2.0
500	10	5	5000	176.8	44.2	19.6	9.9	4.4	2.5

Additional information on the design of specific pilot studies can be found in the following references by Thompson (1982), Montgomery (1985), and Al-Ani (1985).

Additional Materials to those in G.1 and/or G.2

plug flow reactor
cyst suspension, $2x10^7$ cysts/trial

cyst quantity - cysts are prepared as indicated in G.1.
10^3 cysts/ml X 20,000 ml = $2x10^7$ cysts required/trial.

MS2 stock, $2x10^{10}$/trial
2-20 liter (5 gal) carboy
test water pump, mid range 200 ml/min
disinfectant generator
disinfectant pump, mid range 10-20 ml/min
disinfectant residual reagents and equipment

Test Procedure

A. Reactor conditions

1. Test Water Flow rate= 200 ml/min (this may vary from 50 to 500 ml/min with 20 l reservoir total experimental time= 100 min)
2. Disinfectant flow
   gas-requires specific contactor designed for disinfectant
   Liquid=10 to 20 ml/min
3. Temperature
   controlled
4. Prepare 20 liter reservoir (5 gal) of test water at the pH and temperature of the CT trial. Do not add microorganisms
5. Prepare 20 liter reservoir (5 gal) of test water and equilibrate to the temperature of the CT trial. Add Giardia muris cysts at an initial density of 10^3 cysts/ml and/or MS2 bacterial virus at an initial density of 10^6 PFU/ml. Mix thoroughly and adjust pH to the pH of the CT trial. Continuous mixing of the test water feed stock should be carried out over the course of the CT trial to prevent the Giardia cysts from settling.

B. Disinfection Procedure - Prior to Disinfection Trial

1. Determine contact time for the sample ports in the plug flow reactor under conditions of the CT trial by methods described in the SWTR.
2. Determine disinfectant concentration with no microorganisms in the feed test water.

C. CT Trial Procedure

1. Start test water feed without cysts and or virus (approx. 200 ml/min), start disinfectant feed (gas or liquid).
   Allow system to equilibrate.
   Monitor disinfectant residual by appropriate method during this time. Samples for disinfectant residual should be taken directly into tubes or bottles containing reagents to fix the disinfectant at the time the sample is collected. Keep a plot of disinfectant residual vs running time to evaluate steady state conditions.
2. After the disinfectant residual has stabilized, switch to the reservoir containing the test microorganism(s).
3. Allow system to equilibrate for a time = 3 X final contact time.
   example
   final contact time =10 min, allow 30 min.
4. Monitor disinfectant residual by appropriate method during this time. If the disinfectant residual is stable begin chemical and biological sampling for calculation of CT.
5. Sampling
   a. Chemical
      A sufficient volume (about 250 ml should be collected from the sampling tap prior to the biological composite to determine:
      pH
      Residual disinfectant - Samples should be collected directly into tubes or bottles containing reagents to fix the disinfectant at the time the sample is collected.
   b. Biological
      Samples for microbial analysis are collected as short time composite samples over a 10 to 20 minute time period. Several trials may run for a given 20 liter test water preparation as long as sufficient equilibra-

tion and flow recovery times are allowed between trials.

- Zero time samples should be collected as 250 ml composite samples either directly from the test water feed reservoir or in line prior to the addition of the disinfectant.

- Four 250 ml samples are collected separately into a 2 l sterile bottle containing a neutralizing agent for the particular disinfectant. Each sample is thoroughly mixed upon collection and stored at 4 C. If multiple sample ports are used, the order of collection should be from longest to shortest contact time to minimize flow changes due to sampling.

6. Giardia cyst recovery and assay.
   Concentrate the 1000 ml composite sample by filtration according to the method given in section G.1. Record and report the data as described in section G.1. The expected cysts/sample is given below:
   Cysts/sample = 4 x 250 ml X 10^3 cyst/ml = $1x10^5$cyst/sample.
7. Virus Assay
   Before filtration for Giardia, remove 10.0 ml from the biological composite sample to a sterile screw cap culture tube containing 2 to 3 drops chloroform. Assay for MS2, record and report the virus data according to the methods and procedures described in G.2. Be sure to correct the Giardia sample volume to 990 ml.
8. Calculation of CT
   Calculate CT in a manner described in Section G.1 for Giardia and Section G.2 for virus. The residual disinfectant should be the average of the four residual determinations performed prior to the individual samples collected for the biological composite and the time should be the time determined for the sample port under similar flow conditions.

REFERENCES

Al-Ani, C.S.U., Filtration of Giardia Cysts and other substances: Volume 3. Rapid Rate Filtration (EPA/600/2-85/027) 1985.

Montgomery, James M. Consulting Engineers Inc., Water Treatment Principles and Design, John Wiley and Sons, May 1982.

Wallis, P.M., Davies, J.S., Nuthonn, R.,Bichanin-Mappin, J.M., Roach, P.D., and Van Roodeloon, A. Removal and Inactivation of Giardia Cysts in a Mobile Water Treatment Plant Under Field Conditions: Preliminary Results. In Advances in Giardia Research. P.M. Wallis and B.R. Hammand, eds, Union of Calgary Press, p. 137-144, 1989.

Wolfe, R.L., Stewart, M.H., Liange, S.L., and McGuire, M.J., Disinfection of Model Indicator Organisms in a Drinking Water Pilot Plant by Using PEROXONE, Applied Environmental Microbiology, Vol 55, 1989, pp 2230-2241.

Olivieri, V.P. and Sykora, J.L., Field and Evaluation of CT for Determining the Adequacy of Disinfection. American Water Works Association Water Quality Technology Conference. In press, 1989.

APPENDIX H

SAMPLING FREQUENCY FOR TOTAL COLIFORMS IN THE DISTRIBUTION SYSTEM

TABLE H-1

TOTAL COLIFORM SAMPLING REQUIREMENTS
BASED UPON POPULATION

Population Served	Minimum Number of Samples Per Month (1,2,3)	Population Served	Minimum Number of Samples Per Month
25 to 1,000	1	59,001 to 70,000	70
1,001 to 2,500	2	70,001 to 83,000	80
2,501 to 3,300	3	83,001 to 96,000	90
3,301 to 4,100	4	96,001 to 130,000	100
4,101 to 4,900	5	130,001 to 220,000	120
4,901 to 5,800	6	220,001 to 320,000	150
5,801 to 6,700	7	320,001 to 450,000	180
6,701 to 7,600	8	450,001 to 600,000	210
7,601 to 8,500	9	600,001 to 780,000	240
8,501 to 12,900	10	780,001 to 970,000	270
12,901 to 17,200	15	970,001 to 1,230,000	300
17,201 to 21,500	20	1,230,001 to 1,520,000	330
21,501 to 25,000	25	1,520,001 to 1,850,000	360
25,001 to 33,000	30	1,850,001 to 2,270,000	390
33,001 to 41,000	40	2,270,001 to 3,020,000	420
41,001 to 50,000	50	3,020,001 to 3,960,000	450
50,001 to 59,000	60	3,960,001 or more	480

Notes:

1. Non-community systems using all or part surface water and community systems must monitor total coliform at this frequency. A non-community water system using ground water and serving 1,000 persons or fewer must monitor quarterly, beginning 5 years after the rule's promulgation, although this can be reduced to yearly if a sanitary survey shows no defects. A non-community water system serving more than 1,000 persons during any month, or a non-community water system using surface water, must monitor at the same frequency as a like-sized community public water system for each month the system provides water to the public.

2. Unfiltered surface water systems must analyze one coliform sample each day the turbidity exceeds 1NTU.

TABLE H-1

TOTAL COLIFORM SAMPLING REQUIREMENTS
BASED UPON POPULATION (Continued)

3. Systems collecting fewer than 5 samples per month on a regular basis must conduct sanitary surveys. Community and non-community systems must conduct the initial sanitary surveys within 5 and 10 years of promulgation, respectively. Subsequent surveys must be conducted every 5 years, except for non-community systems using protected and disinfected ground water, which have up to 10 years to conduct subsequent surveys.

TABLE H-2

MONITORING AND REPEAT SAMPLE FREQUENCY

System Size	# Routine Samples	# Repeats	More Monitoring For
NCWS[1]	Quarterly[2]	4	5/mo for 1 additional mo
25 - 1,000	Monthly[2]	4	5/mo for 1 additional mo
1,001 - 2,500	2/mo	3	5/mo for 1 additional mo
2,501 - 3,300	3/mo	3	5/mo for 1 additional mo
3,301 - 4,100	4/mo	3	5/mo for 1 additional mo
4,101 - 4,900	5/mo	3	None
>4,900	Table 1	3	None

Notes:

1. Non-community Water systems.
2. For exceptions, see Table 1.

APPENDIX I

MAINTAINING REDUNDANT DISINFECTION CAPABILITY

APPENDIX I

REDUNDANT DISINFECTION CAPABILITY

The SWTR requires that unfiltered water systems provide redundant disinfection components to ensure the continuous application of a disinfectant to the water entering the distribution system. In many systems, both filtered and unfiltered, a primary disinfectant is used to provide the overall inactivation/removal and a secondary residual is applied to maintain a residual in the distribution system. As outlined in Sections 3.2.4 and 5.5.4, redundancy of the disinfection system(s) is recommended to ensure that the overall treatment requirement of 3-log Giardia cyst and 4-log virus removal/inactivation is achieved, and a residual is maintained entering the distribution system. This is particularly important for unfiltered supplies where the only treatment barrier is disinfection. Redundancy of components is necessary to allow for disinfection during routine repairs, maintenance and inspection and possible failures.

In reviewing water disinfection facilities for compliance with redundancy requirements, the following items should be checked:

I. General

A. Are the capacities of all components of both the primary system and the backup system equal to or greater than the required capacities?

Some systems may have two or more units that provide the required dosage rates when all units are operating. In these cases, an additional unit is needed as backup, during the downtime of any of the operating units. The backup must have a capacity equal to or greater than that of the largest on-line unit.

B. Are adequate safety precautions being followed, relative to the type of disinfectant being used?

C. Are redundant components being exercised or alternated with the primary components?

D. Are all components being properly maintained?

E. Are critical spare parts on hand to repair disinfection equipment?

F. Are spare parts available for components that are indispensible for disinfecting the water?

II. Disinfectant Storage

A minimum of two storage units capable of being used alternately should be provided. The total combined capacity of the storage units should provide as a minimum the system design capacity.

A. Chlorine

Storage for gaseous chlorine will normally be in 150-lb cylinders, 2,000-lb containers, or larger on-site storage vessels.

1. Is there automatic switchover equipment if one cylinder or container empties or becomes inoperable?

2. Is the switching equipment in good working order, (manually tested on a regularly scheduled basis), and are spare parts on hand?

3. Are the scales adequate for at least two cylinders or containers.

B. Hypochlorite

Storage of calcium hypochlorite or sodium hypochlorite is normally provided in drums or other suitable containers. Redundancy requirements are not applicable to these by themselves, as long as the required minimum storage quantity is on hand at all times.

C. Ammonia

An hydrous ammonia is usually stored in cylinders as a pressurized liquid. Aqua ammonia is usually stored as a solution of ammonia and water in a horizontal pressure vessel.

1. Is the available storage volume divided into two or more usable units?

2. Is automatic switching equipment in operation to change over from one unit to another when one is empty or inoperable?

3. Are there spare parts for the switching equipment?

III. Generation

Ozone and chlorine dioxide are not stored on-site. Rather, because of their reactivity, they are generated and used immediately.

To satisfy the redundancy requirements for these disinfectants it is recommended that two generating units, or two sets of units, capable of supplying the required feed rate be provided. In systems where there is more than one generation system, a standby unit should be available for times the on-line units need repair. The backup unit should have a capacity equal to or greater than the unit(s) it may replace.

A. Chlorine Dioxide

Chlorine, sodium chlorite, or sodium hypochlorite should be stored in accordance with storage guidelines previously described.

B. Ozone

Are all generation components present and in working order for both the primary and the redundant units (whether using air or oxygen)?

C. Common

Is switchover and automatic start-up equipment installed and operable to change from the primary generating unit(s) to the redundant unit(s)?

IV. Feed Systems

Redundancy in feed systems requires two separate units, or systems, each capable of supplying the required dosage of disinfectant. If more than one unit is needed to apply the required feed rate, a spare unit should be available to replace any of the operating units during times of malfunction. The replacement unit should, therefore, have a capacity equal to or greater than that of the largest unit which it may replace. This requirement applies to all disinfection methods, and is best implemented by housing the on-line and redundant components in separate rooms, enclosures, or areas, as appropriate.

In reviewing these systems for redundancy, the following components should be checked:

A. Chlorine

1. Evaporators
2. Chlorinators
3. Injectors

B. Hypochlorite

1. Mixing tanks and mixers
2. Chemical feed pumps and controls
3. Injectors

C. Ozone

1. Dissolution equipment, including compressor and delivery piping systems

D. Chlorine Dioxide

1. Chlorine feed equipment
2. Sodium chlorite mixing and metering equipment
3. Day tank and mixer
4. Metering pumps
5. If a package ClO_2 unit is used, two must be provided

E. Chloramination

1. Chlorine feed equipment

2. Ammonia feed equipment, including applicable equipment for either:

   a. Anhydrous ammonia (gas)
   b. Aqua ammonia (solution)

V. Residual Monitoring

The best method of monitoring a disinfection facility for continuous operation is by continuous recording equipment. To improve reliability, it is suggested that duplicate continuous monitors are present for backup in the event of monitor failure. However, if there is a failure in the monitoring system for indicating that a continuous residual is being maintained, the SWTR allows systems to take grab samples every four hours for up to five days during monitor repair. For systems without 24 hour staffing it will not be practical to take grab samples and redundant monitoring equipment is recommended. Failure of continuous monitoring would be a violation of a monitoring requirement, not a treatment requirement.

A. Chlorine

1. Does the facility have a continuous monitor for chlorine residual at the disinfection system site with an alarm

or indicator to show when the monitor is not functioning? For added assurance, the provision of a backup monitoring unit is also recommended.

2. Is there instrumentation in place to automatically switch from one monitor to the other if the first one fails?

B. Hypochlorite

Same as for chlorine system.

C. Ozone

1. Does the facility have a continuous ozone monitor with automatic switchover capability and alarms?

2. Does the facility have a continuous ozone residual monitor with automatic switchover capability and alarms?

D. Chlorine Dioxide

1. Does the facility have a continuous chlorine dioxide monitor with automatic switchover capability and alarms?

2. Does the facility have a continuous chlorine dioxide residual monitor with automatic switchover capability and alarms?

E. Chloramination

1. Does the facility have a continuous ammonia monitor with automatic switchover capability and alarm?

2. Does the facility also have a continuous chlorine residual monitor on-site with automatic switchover capability and alarms?

VI. Power Supply

A permanently installed standby generator, capable of running all electrical equipment at the disinfection station, and equipped for automatic start-up on power failure, should be on-site and functional.

Alternatives to a standby generator, such as a feed line from a different power source, are acceptable if they can be shown to have equal reliability.

VII. Alarms

Indicators and alarms, both local and remote, should be capable of promptly alerting operating and supervisory personnel of problem conditions.

A. Local

Lights, buzzers, and horns should be installed and functioning to alert on-site personnel to problem conditions.

B. Remote

Alarm signals should be relayed to a central control panel which is manned 24 hours per day and whose operators can notify response personnel immediately.

C. Problem Conditions

A minimum list of problem conditions which should have indicators and alarms, both locally and at a 24-hour per day switchboard, are as follows:

1. Disinfectant leak
2. Feeder pump failure
3. Power outage
4. Generator or alternate power source on
5. Disinfectant residual less than setpoint value

VIII. Facility Layout

Maximum reliability is ensured when redundant units are separated from primary units. The type of separation should be appropriate to the type of potential malfunction. For example, any area within a building subject to a chlorine leak should have primary components separated from redundant components by an airtight enclosure, i.e., separate rooms of varying sizes.

IX. Separate Facility

Under certain conditions, such as location of a disinfection facility in an area of high earthquake potential, the most reliable means of providing redundant facilities may be to house them in a completely separate structures at a different site.

APPENDIX J

WATERSHED CONTROL PROGRAM

APPENDIX J
WATERSHED CONTROL PROGRAM

The following is a guideline for documenting a watershed control program. The SWTR only requires a watershed control program for unfiltered supplies. A watershed control program can also benefit a filtered system by providing protection for maintaining the source water quality, minimizing the level of disinfection to be provided. It is therefore recommended that all systems conduct the basic elements of a watershed control program. However, the scope of the program should increase as the complexity and size of the watershed/ system increases. The program could be more or less comprehensive than this outline, and will be determined on a case-by-case basis by the utility and the Primacy Agency. In addition to the guidelines below, a wellhead protection program could be the basis of a watershed control program in many states. All of the elements found below would also be part of a local wellhead protection program.

A. Watershed Description

1. Geographical location and physical features of the watershed.

2. Location of major components of the water system in relationship to the watershed.

3. Hydrology: Annual precipitation patterns, stream flow characteristics, etc.

4. Agreements and delineation of land use/ownership.

B. Identification of the Watershed Characteristics and Activities Detrimental to Water Quality

1. Naturally Occurring:

a. Effect of precipitation, terrain, soil types and land cover

b. Animal populations (describe) -- include a discussion of the *Giardia* contamination potential, any other microbial contamination transmitted by animals

c. Other - any other activity which can adversely affect water quality

2. Man-Made:

a. Point sources of contamination such as wastewater treatment plant, industrial discharges, barnyard, feedlots, or private septic systems

The impact of these sources on the microbiological quality of the water source should be evaluated. In cases resulting in identifiable degradation, the discharges should be eliminated in order to minimize the treatment of the water needed.

b. Nonpoint Source of Contamination:

1) Road construction - major highways, railroads

2) Pesticide usage

3) Logging

4) Grazing animals

5) Discharge to ground water which recharges the surface source

6) Recreation activities

7) Potential for unauthorized activity in the watershed

8) Describe any other human activity in the watershed and its potential impact on water quality

It should be noted that grazing animals in the watershed may lead to the presence of Cryptosporidium in the water. Cryptosporidium is a pathogen which may result in a disease outbreak upon ingestion. No information is available on its resistance to various disinfectants, therefore it is recommended that grazing should not be permitted on watersheds of non-filtering systems. Sewage discharges will introduce viruses into the water source which may be occluded in solids and protected from inactivation through disinfection. It is, therefore, recommended that sewage discharges should not be permitted within watersheds of non-filtering supplies. Although it is preferable to not have grazing or sewage discharges within the watershed, Primacy Agencies will

need to evaluate the impact of these activities on a case-by-case basis. In cases where there is a long detention time and a high degree of dilution between the point of the activity and the water intake, these activities may be permissible for unfiltered supplies. The utility should set priorities to address the impacts in B.1. and 2., considering their health significance and the ability to control them.

C. Control of Detrimental Activities/Events

Depending on the activities occurring within the watershed, various techniques could be used to eliminate or minimize their effect. Describe what techniques are being used to control the effect of activities/events identified in B.1. and 2. in its yearly report.

Example:

Activity: Logging in the watershed.

Management Decision: Develop program to minimize impact of logging.

Procedure: Establish agreements with logging companies to maintain practices which will minimize adverse impacts on water quality. These practices should include:

- limiting access to logging sites
- ensuring cleanup of sites
- controlling erosion from site.

Monitoring: Periodically review logging practices to ensure they are consistent with the agreement between the utility and the logging companies.

Example:

Activity: Point sources of discharge within the watershed.

Management Decision: Eliminate those discharges or minimize their impact.

Procedures: Actively participate in the review of discharge permits to alert the reviewing agency of the potential (actual) impacts of the discharge and lobby for its elimination or strict control.

Monitoring: Conduct special monitoring to ensure conditions of the permit are met and to document adverse effects on water quality.

D. Monitoring

1. Routine: Minimum specifications for monitoring several raw water quality parameters are listed in Section 3.1. Describe when, where and how these samples will be collected. These results will be used to evaluate whether the source may continue to be used without filtration.

2. Specific: Routine monitoring may not provide information about all parameters of interest. For example, it may be valuable to conduct special studies to measure contaminants suspected of being present (Giardia, pesticides, fuel products, enteric viruses, etc.). Frequent presence of either Giardia or enteric viruses in raw water samples prior to disinfection would indicate an inadequate watershed control program. Monitoring may also be useful to assess the effectiveness of specific control techniques, and to audit procedures or operational requirements instituted within the watershed. Utilities are encouraged to conduct additional monitoring as necessary to aid them in controlling the quality of the source water.

E. Management/Operations

1. Management

   a. Organizational structure
   b. Personnel and education/certification requirements

2. Operations

   a. Describe system operations and design flexibility.

   b. The utility should conduct some form of ongoing review or survey in the watershed to identify and react to potential impacts on water quality. The scope of this review should be documented and agreed upon by the utility and Primacy Agency on a case-by-case basis.

   c. Specifically describe operational changes which can be made to adjust for changes in water quality. Example: Switching to alternate sources; increasing the level of disinfection; using

settling basins. Discuss what triggers, and who decides to make, those changes.

3. Annual Report: As part of the watershed program, an annual report should be submitted to the Primacy Agency. The contents of the report should:

   a. Identify special concerns that occurred in the watershed and how they were handled (example: herbicide usage, new construction, etc.).

   b. Summarize other activities in the watershed such as logging, hunting, water quality monitoring, etc.

   c. Project what adverse activities are expected to occur in the future and describe how the utility expects to address them.

F. Agreements/Land Ownership

The goal of a watershed management program is to achieve the highest level of raw water quality practicable. This is particularly critical to an unfiltered surface supply.

1. The utility will have maximum opportunity to realize this goal if they have complete ownership of the watershed. Describe efforts to obtain ownership, such as any special programs or budget. When complete ownership of the watershed is not practical, efforts should be taken to gain ownership of critical elements, such as, reservoir or stream shoreline, highly erodable land, and access areas to water system facilities.

2. Where ownership of land is not possible, written agreements should be obtained recognizing the watershed as part of a public water supply. Maximum flexibility should be given to the utility to control land uses which could have adverse effect on the water quality. Describe such agreements.

3. Describe how the utility ensures that the landowner complies with these agreements.

APPENDIX K

SANITARY SURVEY

APPENDIX K

SANITARY SURVEY

The SWTR requires that an on-site inspection be conducted each year as outlined in Section 3. It is recommended that at the onset of determining the classification of a source water that a detailed sanitary survey be conducted. In addition, it is recommended that a sanitary survey such as contained in this appendix be conducted every 3 to 5 years by both filtered and unfiltered systems to ensure that the quality of the water and service is maintained. This time period is suggested since the time and effort needed to conduct the comprehensive survey makes it impractical for it to be conducted annually. A periodic sanitary survey is also required under the Total Coliform Rule for systems collecting fewer than 5 samples/month. The survey must be conducted every 5 years for all systems except for protected ground water systems which disinfect. These systems must conduct the survey every 10 years.

The sanitary survey involves three phases, including planning the survey, conducting the survey and compiling the final report of the survey, as will be presented in the following pages.

1. Planning the Survey

   Prior to conducting or scheduling a sanitary survey, there should be a detailed review of the water system's file to prepare for the survey. The review should pay particular attention to past sanitary survey reports and correspondence describing previously identified problems and their solutions. These should be noted, and action/inaction regarding these problems should be specifically verified in the field. Other information to review includes: any other correspondence, water system plans, chemical and microbiological sampling results, operating reports, and engineering studies. This review will aid in the familiarization with the system's past history and present conditions, and the agency's past interactions with the system.

   The initial phase of the water quality review will be carried out prior to conducting the survey as well, and will consist of reviewing the water system's monitoring records. Records should be reviewed for compliance with all applicable microbiological, inorganic chemical, organic chemical, and radiological contaminant MCLs, and also for compliance with the monitoring requirements for those contaminants. The survey

will provide an opportunity to review these records with the utility, and to discuss solutions to any MCL or monitoring violations. The survey will also provide an opportunity to review how and where samples are collected, and how field measurements (turbidity, chlorine residual, fluoride, etc.) are made. Points to cover include:

a. Is the system in compliance with all applicable MCLs (organic chemical, inorganic chemical, microbiological, and radiological)?

b. Is the system in compliance with all monitoring requirements?

The pre-survey file review should generate a list of items to check in the field, and a list of questions about the system. It will also help to plan the format of the survey and to estimate how much time it may take. The next step is to make the initial contact with the system management to establish the survey date(s) and time. Any records, files, or people that will be referenced during the survey should be mentioned at the outset. Clearly laying out the intent of the survey up front will greatly help in managing the system, and will ensure that the survey goes smoothly without a need for repeat trips.

2. Conducting the Survey

The on-site portion of the survey is the most important and will involve interviewing those in charge of managing the water system as well as the operators and other technical people. The survey will also review all major system components from the source(s) to the distribution system. A standard form is frequently used to ensure that all major components and aspects of each system are consistently reviewed. However, when in the field, it is best to have an open mind and focus most attention on the specifics of the water system, using the form only as a guide. The surveyor should be certain to be on time when beginning the survey. This consideration will help get the survey started smoothly with the operator and/or manager.

As the survey progresses, any deficiencies that are observed should be brought to the attention of the water system personnel, and the problem and the corrective measures should be discussed. It is far better to clarify technical details and solutions while standing next to the problem than it is to do so over the telephone. Points to cover include:

a. Is the operator competent in performing the necessary field testing for operational control?

b. Are testing facilities and equipment adequate, and do reagents used have an unexpired shelf life?

c. Are field and other analytical instruments properly and regularly calibrated?

d. Are records of field test results and water quality compliance monitoring results being maintained?

e. Conduct any sampling which will be part of the survey.

Also, detailed notes of the findings and conversations should be taken so that the report of the survey will be an accurate reconstruction of the survey.

Specific components/features of the system to review and some pertinent questions to ask are:

A. Source Evaluation

All of the elements for a source evaluation enumerated below may also be part of a Wellhead Protection Program.

1. Description: based on field observations and discussion with the operator, a general characterization of the watershed should be made. Features which could be included in the description are:

   a. Area of watershed or recharge area.

   b. Stream flow.

   c. Land usage (wilderness, farmland, rural housing, recreational, commercial, industrial, etc.).

   d. Degree of access by the public to watershed.

   e. Terrain and soil type.

   f. Vegetation.

   g. Other.

2. Sources of contamination in the watershed or sensitive areas surrounding wells or well fields should be identified. Not only should this be determined by physically touring and observing the watershed and its daily uses, but the surveyor should also actively question the water system manager about adverse and potentially adverse

activities in the watershed. An example of types of contamination includes:

a. Man Made.

1. Point discharges of sewage, storm-water, and other wastewater.

2. On-site sewage disposal systems.

3. Recreational activities (swimming, boating, fishing, etc.).

4. Human habitation.

5. Pesticide usage.

6. Logging.

7. Highways or other roads from which there might be spills.

8. Commercial or industrial activity.

9. Solid waste or other disposal facilities.

10. Barnyards, feed lots, turkey and chicken farms and other concentrated domestic animal activity.

11. Agricultural activities such as grazing, tillage, etc., which affects soil erosion, fertilizer usage, etc.

12. Other.

b. Naturally Occurring.

1. Animal populations, both domestic and wild.

2. Turbidity fluctuations (from precipitation, landslides, etc.).

3. Fires.

4. Inorganic contaminants from parent materials (e.g., asbestos fibers).

5. Algae blooms.

6. Other.

This list is by no means all inclusive. The surveyor should rely principally on his observations and thorough questioning regarding the unique properties of each watershed to completely describe what may contaminate the source water.

3. Source Construction.

a. Surface Intakes.

1. Is the source adequate in quantity?

2. Is the best quality source or location in that source being used?

3. Is the intake protected from icing problems if appropriate?

4. Is the intake screened to prevent entry of debris, and are screens maintained?

5. Is animal activity controlled within the immediate vicinity of the intake?

6. Is there a raw water sampling tap?

b. Infiltration Galleries.

1. Is the source adequate in quantity?

2. Is the best quality source being used?

3. Is the lid over the gallery watertight and locked?

4. Is the collector in sound condition and maintained as necessary?

5. Is there a raw water sampling tap?

c. Springs.

1. Is the source adequate in quantity?

2. Is there adequate protection around the spring such as fencing to control the area within 200 feet?

3. Is the spring constructed to best capture the spring flow and exclude surface water infiltration?

4. Are there drains to divert surface water from the vicinity of the spring?

5. Is the collection structure of sound construction with no leaks or cracks?

6. Is there a screened overflow and drain pipe?

7. Is the supply intake located above the floor and screened?

8. Is there a raw water sampling tap?

d. Catchment and Cistern.

1. Is source adequate in quantity?

2. Is the cistern of adequate size?

3. Is the catchment area protected from potential contamination?

4. Is the catchment drain properly screened?

5. Is the catchment area and cistern of sound construction and in good condition?

6. Is catchment constructed of approved non-toxic, non-leaching material?

7. Is the cistern protected from contamination -- manholes, vents, etc?

8. Is there a raw water tap?

e. Other Surface Sources.

1. Is the source adequate in quantity?

2. Is the best possible source being used?

3. Is the immediate vicinity of the source protected from contamination?

4. Is the structure in good condition and properly constructed?

5. Is there a raw water sampling tap?

4. Pumps, Pumphouses, and Controls.

a. Are all intake pumps, booster pumps, and other pumps of sufficient capacity?

b. Are all pumps and controls operational and maintained properly?

c. Are check valves, blow off valves, water meters and other appurtenances operated and maintained properly?

d. Is emergency power backup with automatic start-up provided and does it work (try it)?

e. Are underground compartments and suction wells waterproof?

f. Is the interior and exterior of the pumphouse in good structural condition and properly maintained?

g. Are there any safety hazards (electrical or mechanical) in the pumphouse?

h. Is the pumphouse locked and otherwise protected against vandalism?

i. Are water production records maintained at the pumphouse?

5. Watershed Management (controlling contaminant sources): The goal of the watershed management program is to identify and control contaminant sources in the watershed (see Section 3.3.1 of this document, "Watershed Control Program"). Under ideal conditions each source of contamination identified in 2 will already have been identified by the utility, and some means of control instituted, or a factual determination made that its impact on water quality is insignificant. To assess the degree to which the watershed management program is achieving its goal, the following types of inquiries could be made:

a. If the watershed is not entirely owned by the utility, have written agreements been made with other land owners to control land usage to the satisfaction of the utility? Are appropriate regulations under the contract of state/local department of health in effect?

b. Is the utility making efforts to obtain as complete ownership of the watershed as possible? Is effort directed to control critical elements?

c. Are there means by which the watershed is regularly inspected for new sources of contamination or trespassers where access is limited?

d. Are there adequately qualified personnel employed by the utility for identifying watershed and water quality problems and who are given the responsibility to correct these problems?

e. Are raw water quality records kept to assess trends and to assess the impact of different activities and contaminant control techniques in the watershed?

f. Has the system responded adequately to concerns expressed about the source or watershed in past sanitary surveys?

g. Has the utility identified problems in its yearly watershed control reports, and if so, have these problems been adequately addressed?

h. Identify what other agencies have control or jurisdiction in the watershed. Does the utility actively interact with these agencies to see that their policies or activities are consistent with the utility's goal of maintaining high raw water quality?

B. <u>Treatment Evaluation</u>

1. Disinfection.

a. Is the disinfection equipment and disinfectant appropriate for the application (chloramines, chlorine, ozone, and chlorine

dioxide are generally accepted disinfectants)?

b. Are there back-up disinfection units on line in case of failure, and are they operational?

c. Is there auxiliary power with automatic start up in case of power outage? Is it tested and operated on a regular basis, both with and without load?

d. Is there an adequate quantity of disinfectant on hand and is it properly stored (e.g., are chlorine cylinders properly labeled and chained)?

e. In the case of gaseous chlorine, is there automatic switch over equipment when cylinders expire?

f. Are critical spare parts on hand to repair disinfection equipment?

g. Is disinfectant feed proportional to water flow?

h. Are daily records kept of disinfectant residual near the first customer from which to calculate CTs?

i. Are production records kept from which to determine CTs?

j. Are CTs acceptable based on the level of treatment provided (see Surface Water Treatment Rule for CT values, and Sections 3 and 5 of this guidance manual for calculation of CT).

k. Is a disinfectant residual maintained in the distribution system, and are records kept of daily measurements?

l. If gas chlorine is used, are adequate safety precautions being followed (e.g., exhaust fan with intake within six inches of the floor, self-contained breathing apparatus that is regularly tested, regular safety training for employees, ammonia bottles and/or automatic chlorine detectors)? Is the system adequate to ensure

the safety of both the public and the employees in the event of a chlorine leak?

2. Other.

   a. Are other treatment processes appropriate and are they operated to produce consistently high water quality?

   b. Are pumps, chemical feeders, and other mechanical equipment in good condition and properly maintained?

   c. Are controls and instrumentation adequate for the process, operational, well maintained and calibrated?

   d. Are accurate records maintained (volume of water treated, amount of chemical used, etc.)?

   e. Are adequate supplies of chemical on hand and properly stored?

   f. Are adequate safety devices available and precautions observed?

   Sections of a sanitary survey pertaining to systems containing filtration facilities have been omitted, as this section of the guidance document pertains to non-filtering systems.

C. Distribution System Evaluation

After water has been treated, water quality must be protected and maintained as it flows through the distribution system to the customer's tap. The following questions pertain to the water purveyor's ability to maintain high water quality during storage and distribution.

1. Storage.

   a. Gravity.

      1. Are storage reservoirs covered and otherwise constructed to prevent contamination?

      2. Are all overflow lines, vents, drainlines, or cleanout pipes turned downward and screened?

3. Are all reservoirs inspected regularly?

4. Is the storage capacity adequate for the system?

5. Does the reservoir (or reservoirs) provide sufficient pressure throughout the system?

6. Are surface coatings within the reservoir in good repair and acceptable for potable water contact?

7. Is the hatchcover for the tank watertight and locked?

8. Can the reservoir be isolated from the system?

9. Is adequate safety equipment (caged ladder, OSHA approved safety belts, etc.) in place for climbing the tank?

10. Is the site fenced, locked, or otherwise protected against vandalism?

11. Is the storage reservoir disinfected after repairs are made?

12. Is there a scheduled program for cleaning storage reservoir sediments, slime on floor and side walls.

b. Hydropneumatic.

1. Is the storage capacity adequate for the system?

2. Are instruments, controls, and equipment adequate, operational, and maintained?

3. Are the interior and exterior surfaces of the pressure tank in good condition?

4. Are tank supports structurally sound?

5. Does the low pressure cut in provide adequate pressure throughout the entire system?

6. Is the pump cycle rate acceptable (not more than 15 cycles/hour)?

2. Cross Connections.

   a. Is the system free of known uncontrolled cross connections?

   b. Does the utility have a cross connection prevention program, including annual testing of backflow prevention devices?

   c. Are backflow prevention devices installed at all appropriate locations (wastewater treatment plant, industrial locations, hospitals, etc.)?

3. Other.

   a. Are proper pressures and flows maintained at all times of the year?

   b. Do all construction materials meet AWWA or equivalent standards?

   c. Are all services metered and are meters read?

   d. Are plans for the system available and current?

   e. Does the system have an adequate maintenance program?

      - Is there evidence of leakage in the system?
      - Is there a pressure testing program?
      - Is there a regular flushing program?
      - Are valves and hydrants regularly exercised and maintained?
      - Are AWWA standards for disinfection followed after all repairs?
      - Are there specific bacteriological criteria and limits prescribed for new line acceptance or following line repairs?

- Describe the corrosion control program.

- Is the system interconnected with other systems?

D. Management/Operation

1. Is there an organization that is responsible for providing the operation, maintenance, and management of the water system?

2. Does the utility regularly summarize both current and long-term problems identified in their watershed, or other parts of the system, and define how they intend to solve the problems i.e., is their planning mechanism effective; do they follow through with plans?

3. Are customers charged user fees and are collections satisfactory?

4. Are there sufficient personnel to operate and manage the system?

5. Are personnel (including management) adequately trained, educated, and/or certified?

6. Are operation and maintenance manuals and manufacturers technical specifications readily available for the system?

7. Are routine preventative maintenance schedules established and adhered to for all components of the water system?

8. Are sufficient tools, supplies, and maintenance parts on hand?

9. Are sufficient operation and maintenance records kept and readily available?

10. Is an emergency plan available and usable, and are employees aware of it?

11. Are all facilities free from safety defects?

When the survey is completed, it is always preferable to briefly summarize the survey with the operator(s) and management. The main findings of the survey should be reviewed so it is clear that there are not misunderstandings about findings/conclusions. It is also good

to thank the utility for taking part in the survey, arranging interviews with employees, gathering and explaining their records, etc. The information and help which the utility can provide an invaluable to a successful survey, and every attempt should be made to continue a positive relationship with the system.

3. Reporting the Survey

A final report of the survey should be completed as soon as possible to formally notify the system and other agencies of the findings. There is no set or necessarily best format for doing so, and the length of the report will depend on the findings of the survey and size of the system. Since the report may be used for future compliance actions and inspections, it should include as a minimum: 1) the date of the survey; 2) who was present during the survey; 3) the findings of the survey; 4) the recommended improvements to identified problems; and 5) the dates for completion of any improvements. Any differences between the findings discussed at the conclusion of the survey and what's included in the final report should be discussed and clarified with the utility prior to sending out the final report. In other words, the utility should be fully aware of the contents of the final report before receiving it.

APPENDIX L
SMALL SYSTEM CONSIDERATIONS

APPENDIX L
SMALL SYSTEM CONSIDERATIONS

Introduction

Under the provisions of the SWTR, systems with fewer than 500 service connections may be eligible for an exemption. Guidance on the requirements for an exemption is provided in Section 9. For systems which are not eligible for an exemption, compliance with the SWTR is mandatory. It is recognized that the majority (approximately 75 percent) of people in the United States are served by a relatively small number of large systems. However, most water systems in the United States are small. For small systems, compliance with the various provisions of the SDWA has traditionally been a problem. Records show small systems have a disproportionately higher incidence of drinking water quality and monitoring difficulties. The reasons for these difficulties can generally be broken down into the following three categories:

- Economics
- Treatment Technologies
- Operations (lack of qualified personnel)

Small water systems typically face severe economic constraints. Their lack of operating revenues results in significant limitations on their ability to respond to the requirements of the SDWA. These systems cannot benefit from the economies of scale which are available to larger systems.

The second difficulty facing the small systems has been the lack of appropriate treatment technologies. Although methods for removing most of the contaminants known to occur in drinking water are available, many of these technologies have only recently been scaled down for the smaller systems.

The third problem which has traditionally plagued small systems is the lack of well trained operators. This deficiency is the result of many combined factors. First of all, many of these operators are employed only on a part-time basis or if they are employed on a full-time basis they have a myriad of additional duties. In addition, the operator's technical

background may be limited as well. This results from the low salary of the position, which is uninviting to qualified operators. Also, in spite of the requirement of retaining certified operators upheld in many states, it seems to be difficult to enforce this requirement in small systems.

The purpose of this appendix is to provide assistance to the Primacy Agency in defining the problems and potential solutions typically associated with small systems. It is beyond the scope of this document to provide an indepth dicussion of the needs of small systems. However, over the past several years the needs of the small water systems have been recognized to be of primary concern and numerous workshops, seminars and committees have been attempting to more clearly define workable solutions. A partial listing of the papers, reports and proceedings which discuss problems and solutions pertaining to small systems beyond that which is possible in this manual is presented in the reference list of this appendix.

Economics

One of the most severe constraints of small systems is the small economic base from which to draw funds. Certain treatment and services must be provided for a community regardless of how few people are served. Thus, as the number of connections to the system decrease, the cost per connection increases. The economic limitations of small utilities makes it difficult to provide needed upgrading of existing facilities or an adequate salary to maintain the employment of a qualified operator to monitor and maintain the system. Adding to the severity of the economic hardships of small systems is the fact that many of the small water systems are privately owned, with private ownership increasing as system size decreases. The ownership of the plant presents difficulties since privately owned systems are subject to rate controls by the local public utility commission, are not eligible for public grants and loans, and may find commercial loans hard to obtain.

Financing options for small systems include; federal and state loan and grant programs, federal revenue sharing and revenue bonds (for municipal systems) and loans through the United States Small Business Administration (SBA) and use of industrial development bonds or privatiza-

tion (for private utilities). These options are explained in greater detail in the "Guidance Manual - Institutional Alternatives for Small Water Systems" (AWWA, 1986). The following paragraphs will explain some existing options which may ease the hardship of financing small water treatment facilities.

The major cause of small system difficulties arises from the lack of funds and resources. It is therefore in the best interest of small utilities to expand their economic base and the resources available to them, to achieve the economies of scale available to larger systems. Regionalization is the physical or operational union of small systems to effect this goal. This union can be accomplished through the physical interconnection of two or more small systems or the connection of a smaller system to a pre-existing larger system. Water supply systems can also join together for the purchase of supplies, materials, engineering services, billing and maintenance. The union of the small systems increases the population served, thereby dispersing the operational costs and decreasing the cost per consumer.

The creation of utility satellites is another form of regionalization. A satellite utility is one which taps into the resources of an existing larger facility without being physically connected to, or owned by, the larger facility. The larger system may provide any of the following for the smaller system:

1. Varying levels of technical operational, or managerial assistance on a contract basis.

2. Wholesale treated water with or without additional services.

3. Assuming ownership, operation and maintenance responsibility when the small system is physically separate with a separate source.

The formation of a satellite offers many advantages for both the satellite and the parent utility. These advantages include: an improved economy of scale for satellites, an expanded revenue base for the parent utility, provisions of needed resources to satellites, the retention of the satellites' local autonomy, improved water quality management of the satellite, improved use of public funds for publicly owned satellites.

In order to create a more definite structure for the union of resources of water treatment facilities, water districts may be created. Water districts are formed by county officials and provide for the public ownership of the utilities. The utilities in any given district would combine resources and/or physically connect systems so that one or two facilities would provide water for the entire district. The creation of water districts creates eligibility for public monies, has the potential for economies of size, facilitates the takeover or contract services with publicly owned non-community systems and small privately owned systems, and offers a tax advantage. Drawbacks include subjection to politics, a strong local planning effort is needed for success, and competition with private enterprises.

The centralization of utilities can be taken one step further through the creation of county utilities or even state utilities. The government will create a board which may then act to acquire, construct, maintain and operate any public water supply within its district, the system may provide water on its own or purchase water from any municipal corporation. The board may adopt and administer rules for the construction, maintenance, protection and use of public water supplies and the fixation of reasonable rates for water supplies. The cost of construction and/or upgrading of facilities may be defrayed through the issuance of bonds and/or property assessment. As with all the alternatives, the creation of government control of the utilities has its advantages and disadvantages. The advantages include: the creation of central management, creation of economy of scale for utilities, eligibility for public grants and loans, savings through centralized purchasing, management, consultation, planning and technical assistance, and possible provision for pool of trained operators. The disadvantages include the subjectivity to politics, the slow response caused by bureaucracy, and competition to private contractors.

Treatment Technologies

The high cost of available treatment technologies has limited their use in small water supply systems. Recently prefabricated package plants and individual treatment units have been developed to lessen these costs.

At the present time, the treatment technologies which are available to enable systems to comply with the Safe Drinking Water Act are identified to be the following:

- Package plants
- Slow-sand filters
- Diatomaceous earth filters
- Cartridge filtration

A brief discussion of each treatment method is provided below.

Package Plants

Clarification and filtration units which require minimal assembly in the field can now be manufactured. To minimize required operator skill level and operational attention, the equipment should be automated. Continuous effluent turbidity and disinfectant residual monitoring systems with alarms and emergency shutdown provisions are features that safeguard water quality and should be provided for unattended plants.

Slow-Sand Filters

Slow-sand filters are applicable to small water supply systems. Their proven record of effective removal of turbidity and Giardia cysts makes them suitable for application where operational attention is minimal. Since no chemicals other than a disinfectant are needed, and no mechanical equipment is involved, the required operator skill level is the lowest of the filtration alternatives available to small systems.

Diatomaceous Earth Filters

Diatomaceous earth (DE) pressure and vacuum filters can be used on relatively low turbidity surface waters (less than 1 to 2 NTU) for removal of turbidity and Giardia cysts. DE filters can effectively remove particles as small as 1 micron, but would require coagulating chemicals and special filter aids to provide significant virus removal.

Cartridge Filters

Cartridge filters using microporous ceramic filter elements with pore sizes as small as 0.2 um may be suitable for producing potable water, in combination with disinfection, from raw water supplies containing moderate levels of turbidity, algae, protozoa and bacteria. The advantage to a small system, is, with the exception of chlorination, that no other chemicals are required. The process is one of strictly physical removal

of small particles by straining as the water passes through the porous membranes. Other than occasional cleaning or membrane replacement, operational requirements are not complex and do not require skilled personnel.

Selection of a Filtration Technology

The criteria for selection of a filtration technology for a small community are essentially the same as those for a larger community. That is, the utility must first screen the complete list of available alternatives to eliminate those which are either not technically suited to the existing conditions (Table 4-1) or not affordable by the utility. Remaining alternatives should then be evaluated based on both cost (capital, annual, and life-cycle) and non-cost bases (operation and maintenance, technical requirements versus personnel available; flexibility regarding future needs; etc.). In these evaluations it should be noted that even though automated package plants are cost-competitive with slow sand filters, their operation requirements to achieve optimum performance could be complicated. Also, the maintenance requirements for package plants would be mechanically and electrically oriented and might require a maintenance agreement with the manufacturer.

During the process of installing the treatment system, interim measures should be taken to ensure the delivery of a reasonably safe water to the consumers. In addition to the available interim measures listed in Section 9.3, temporary installation of mobile filtration plants may be possible. These trailer-mounted units are sometimes available from state agencies for emergencies, but more often may be rented or leased from an equipment manufacturer.

Modification of Existing Filtration Systems

Small treatment systems that are already in existence should comply with the performance criteria of the SWTR. If the systems are not found to be performing satisfactorily, modifications to the existing process may be required. Improvement in treatment efficiency depends on the type of filtration system in use. Operation of slow sand filters could be checked for bed depth, short-circuiting, excessive hydraulic loading, and for the need to pretreat the raw water. Infiltration galleries, or sometimes, roughing filters ahead of a slow sand filter may provide for better

performance by reducing the solids load on the filters. However, the design criteria and costs for this alternative have not yet been defined. Site specific studies may be required before roughing filters could be used to achieve compliance with the regula- tions. Diatomaceous earth (DE) filters should be checked for appropriate precoat and body feed application, hydraulic loading, grade (size) of DE being used, and possible need for chemical pretreatment. Package plants would have to be checked process-by-process, similar to the system used for a conventional plant. Other filtration processes would have to be checked for hydraulic loading rate, appropriateness of the filter material (pore size), and possible need for additional pretreatment.

Disinfection

Disinfection (CT) requirements for small systems can be met in several different ways. The most obvious method of maintaining a disinfectant residual in the distribution system is to add disinfectant at one or more additional locations. An alternate method is to increase the disinfectant dose at the existing application point(s). The latter alternative, however, may increase disinfectant byproducts, including THMs, in the system.

If it is a relatively short distance between the treatment system and the first customer, additional contact time can be provided so that the disinfectant dose does not have to be increased beyond desirable residuals. Two specific methods of increasing contact time for small systems are 1) installing a pressure vessel or closed storage vessel, baffled to provide adequate contact time, or 2) constructing a looped pipeline, on the finished water line between the filtration-disinfection system and the first customer. The feasibility of either of these methods would depend on system specifics that include size, physical conditions, and cost.

If it is not practical to provide additional storage time to achieve the desired CT, an alternate, more effective disinfectant may be used. An alternate disinfectant may provide a sufficient CT without altering the system configuration.

Operations

Water treatment facilities need to be operated properly in order to achieve maximum treatment efficiencies. There is currently a lack of well trained operators at many small treatment plants. The main cause is lack of awareness of the importance of correct plant operation, lack of training programs, lack of enforcement of the requirement for employment of a certified operator and lack of funds to employ such an operator.

Small systems may wish to implement a circuit rider/operator program. In this program a qualified, certified, experienced operator works for several water supply systems. The rider can either directly operate the plants, or provide technical assistance to individual plant operators, by acting as a trainer through on-the-job supervision. The latter would be preferable since it could create a pool of well trained operators.

The main cause of inadequately trained operators is the lack of well established training programs. Until such training programs are begun, systems must depend on other training means, such as seminars and books. One resource which may be helpful in running the plant is "Basic Management Principles for Small Water Systems - An AWWA Small-Systems Resource Book", 1982.

Most package plant manufacturers' equipment manuals include at least brief sections on operating principles, methods for establishing proper chemical dosages, instructions for operating the equipment, and trouble-shooting guides. An individual who studies these basic instructions and receives comprehensive start-up training should be able to operate the equipment satisfactorily. These services are vital to the successful performance of a package water treatment plant and should be a requirement of the package plant manufacturer. The engineer designing a package plant facility should specify that start-up and training services be provided by the manufacturer, and also should consider requiring the manufacturer to visit the plant at 6-month and 1-year intervals after start-up to adjust the equipment, review operations, and retrain operating personnel. Further, this program should be ongoing and funds should be budgeted every year for at least one revisit by the package plant manufacturer.

Another way for small systems to obtain qualified plant operation would be to contract the services of administrative, operations, and/or maintenance personnel from a larger neighboring utility, government agencies, service companies or consulting firms. These organizations could supply assistance in financial and legal planning, engineering, purchasing accounting and collection services, laboratory support, licensed operators or operator training, treatment and water quality assurance, regulatory liaison, and/or emergency assistance. Through the contracting of these services the utility provides for the resources needed, improves water quality management and retains its autonomy. However, if and when the contract is terminated, the utility returns to its original status.

References

American Water Works Association. Basic Management Principles for Small Water Systems, 1982.

American Water Works Association. Design and Construction of Small Water Systems, 1984.

Kelly, Gidley, Blair and Wolfe, Inc. Guidance Manual - Institutional Alternatives for Small Water Systems. AWWA Research Foundation Contract 79-84, 1986.

APPENDIX M

PROTOCOL FOR DEMONSTRATION OF EFFECTIVE TREATMENT

APPENDIX M

PROTOCOL FOR DEMONSTRATION OF EFFECTIVE TREATMENT

This appendix presents approaches which can be taken to demonstrate overall effective removal and/or inactivation of Giardia cysts.

M.1 Demonstration for Alternate Technology

Systems using a filtration technology other than those enumerated in the SWTR may demonstrate the effectiveness of the treatment process through pilot or full scale testing. As a minimum, testing should be conducted when the source exhibits its worst case annual conditions. Some systems may have two periods of "worst case" water quality including the cold water in winter or algae blooms during the summer.

Pilot units should include the following:

- filtration rate of the pilot system equal to filtration rate on full scale unit
- pilot filter diameter greater than or equal to 50 times the media diameter, (Robeck, et al 1959)
- media diameter, depth, and size gradation should be identical to full scale,
- coagulant dosing identical to full scale
- any mixing and settling occurring before filtration in the full scale plant should be reproduced as closely as possible in the pilot. Mixing should be of the same G value(s), and the detention time for settling should be close to the average flow detention time for the projected full scale plant.

According to the SWTR, alternate technologies must be capable of meeting the same turbidity performance criteria of slow sand filtration systems. Thus the filtered water from the process should be monitored continuously or with grab samples every four hours for turbidity. The requirement for meeting turbidity performance has been established to

ensure that there will be no interference of turbidity with virus inactivation through disinfection.

Following the demonstration of meeting the turbidity requirements, the level of Giardia cyst removal achieved must be determined. The protocol in M.2 may be followed for this demonstration.

M.2 Particle Size Analysis Demonstration for Giardia Cyst Removal Credit

Particle size analysis may be used to demonstrate the level of actual Giardia cyst removal provided by the system. This demonstration can be done using samples from the full scale plant or a pilot unit.

In the case of either a full scale or pilot scale demonstration, removal of particles in the range of 5 to 15 um in diameter should be determined using an electronic particle counter that has been calibrated with latex spheres. If a light blockage device is used (e.g. HIAC) this calibration should have been done during installation of the device. The calibration should be checked before taking measurements for the purposes of this demonstration. Samples should be diluted appropriately to ensure that measurements do not reflect coincident error. Coincident error results when more than one particle passes the detector at one time, causing an inaccurate particle count and diameter measurement. An electrical sensing zone device (e.g. Coulter Counter or Elzone) may also be used. Appropriate dilutions, electrolyte strength, and calibration procedures should be followed (these are scheduled to be outlined in the 17th edition of Standard Methods). When using an electrical sensing zone instrument, an orifice no larger than 125 um and no smaller than 40 um should be used since only particles between 2% and 40% of the orifice diameter are accurately sized and counted (Karuhn et al 1975).

Samples of the filter influent and effluent should be taken 5 minutes after the backwashed filter is placed in operation, and every 30 minutes thereafter for the first 3 hours of operation, followed by hourly samples up until backwash (Wiesner et al 1987). All samples should show at least a 2-log removal. The SWTR establishes an overall treatment requirement of 3-log Giardia cyst removal/inactivation. Thus, disinfec-

tion must be provided to supplement the particulate removal and meet this requirement.

Samples from repeated filter runs may be averaged at each sampling time, but samples should not be averaged within one filter run.

Additional suggestions on particle counting technique (Wiesner 1985):

1) If particle counts are not determined immediately upon sampling (within 10 minutes) samples should be diluted.

2) For an electrical sensing zone measurement, samples should be diluted 1:5 to 1:20 with a "particle-free" electrolyte solution (approximately 1% NaCl) containing 100 particles per ml or fewer.

3) For a light blockage measurement, particle free water should be used to dilute samples.

4) Dilutions should be done to produce particle concentrations as close to the tolerance for coincident error as possible to minimize background counts.

5) Particle counts should be determined within 8 hours of sampling.

6) All sampling vessels should be washed with laboratory detergent, double rinsed in particle free water, and rinsed twice with the water being sampled at the time of sampling.

The log reduction of particles in the size range of 5 to 15 um in size can be assumed to correspond to the log reduction of Giardia cysts which would be achieved.

M.3 Demonstration for Increased Turbidity Allowance

Based upon the requirements of the SWTR, the minimum turbidity performance criteria for systems using conventional treatment or direct filtration is filtered water turbidity less than or equal to 0.5 NTU in 95 percent of the measurements taken each month. However, at the discretion of the Primacy Agency, filtered water turbidity levels of less than or equal to 1 NTU in 95 percent of the measurements taken every month

may be permitted on a case-by-case basis depending on the capability of the total system to remove and/or inactivate at least 99.9 percent of Giardia lamblia cysts.

Treatment plants that use settling followed by filtration, or direct filtration are generally capable of producing a filtered water with a turbidity of 0.2 NTU or less. The most likely cause of high turbidities in the filtered water is incorrect coagulant dosing (O'Melia, 1974). Regardless of the turbidity of the raw or finished water, coagulant addition at some point prior to filtration is required to destabilize particles for removal in the filter. Only plants documenting continuous coagulant feed prior to filtration should be eligible for being allowed higher filtered water turbidities than the 0.5 NTU requirement. At plants that continuously feed coagulant and do not meet the 0.5 NTU requirement, a series of jar tests, and perhaps sand column filtration tests (in batch) should be performed to evaluate the optimum coagulant dose for turbidity removal.

In the event that plants can document continuous coagulant feed, and, after running the plant under conditions determined in batch testing to be optimal for turbidity removal, still do not meet the 0.5 NTU requirement, effective filtration status may still be appropriate. This would further be supported if it can be shown that the full scale plant is capable of achieving at least a 2-log reduction in the concentration of particles between 5 and 15 um in size through particle size analysis as outlined in Section M.2. Where a full scale plant does not yet exist, appropriately scaled-down pilot filters might be used for such a demonstration.

Disinfection

The level of disinfection could also be considered for determining when to allow a higher turbidity performance criterion for a system. For example, if a system achieves 3-log Giardia cyst inactivation through disinfection, as determined by CT values, it may be appropriate to allow higher filtered water turbidities (i.e., greater than 0.5 NTU but less than 1 NTU in 95 percent of the measurements and never exceeding 5 NTU).

The expected level of fecal contamination and Giardia cyst concentrations in the source water should be considered in the above analysis. High levels of disinfection (e.g., 2 to 3-log inactivation of Giardia cysts), in addition to filtration which achieves less than 0.5 NTU in 95 percent of the measurements may be appropriate, depending upon source water quality. Further guidance on the level of disinfection to be provided for various source water conditions is provided in Section 4.4.2. In all cases the minimum disinfection to be provided must supplement the particulate removal to ensure at least a 3-log Giardia cyst removal/inactivation.

References

American Public Health Association; American Water Works Association; Water Pollution Control Federation. Standard Methods for the Examination of Water and Wastewater, 17th ed. (supplement), September 1989.

Coulter Electronics 600 W. 20th Street, Hialeah, FL 33010-2428

Karuhn, R.; Davies, R.; Kaye, B.; Clinch, M. Studies on the Coulter Counter Part I. Powder Technology Volume II, pp. 157-171, 1975.

O'Melia, C. The Role of Polyelectrolytes in Filtration Processes, EPA - 67012-74-032, 1974.

Robeck, G.; Woodword, R. L. Pilot Plants for Water Treatment Research, Journal of Sanitary Engineering ASCE Vol. 85;SA4; 1, August 1959.

Wiesner, M. "Optimum Water Treatment Plant Configuration Effects of Raw Water Characteristics," dissertation John Hopkins University, Baltimore, MD, 1985.

Wiesner, M.; Rook, J. J.; Fiessinger, F. Optimizing the Placement of GAC Filters, J. AWWA VOL 79, pp. 39-49, Dec 1987.

APPENDIX N

PROTOCOLS FOR POINT-OF-USE DEVICES

Preface

The protocol presented in this paper can be applied to demonstrate the effectiveness of new technologies as well as point-of-use devices. The evaluation presented here deals with the removal of particulates and disinfection. In areas which pertain to disinfection, the guidelines contained in Appendix G take precedence.

CONTENTS

	Page
PREFACE	
1. GENERAL	N-1
2. PERFORMANCE REQUIREMENTS	N-6
3. MICROBIOLOGICAL WATER PURIFIER TEST PROCEDURES	N-8
APPENDIX N-1 SUMMARY FOR BASIS OF STANDARDS AND TEST WATER PARAMETERS	N-21
APPENDIX N-2 LIST OF PARTICIPANTS IN TASK FORCE	N-29
APPENDIX N-3 RESPONSE BY REVIEW SUBCOMMITTEE TO PUBLIC COMMENTS	N-31

UNITED STATES
ENVIRONMENTAL PROTECTION AGENCY

Registration Division
Office of Pesticide Programs
Criteria and Standards Division
Office of Drinking Water

GUIDE STANDARD AND PROTOCOL FOR TESTING MICROBIOLOGICAL WATER PURIFIERS

Report of Task Force
Submitted April, 1986
Revised April, 1987

1. GENERAL

1.1 Introduction

The subject of microbiological purification for waters of unknown microbiological quality repeatedly presents itself to a variety of governmental and non-governmental agencies, consumer groups, manufacturers and others. Examples of possible application of such purification capabilities include:

- Backpackers and campers
- Non-standard military requirements
- Floods and other natural disasters
- Foreign travel and stations (however, not for extreme contamination situations outside of the U.S.)
- Contaminated individual sources, wells and springs (however, not for the conversion of waste water to microbiologically potable water)
- Motorhomes and trailers

Batch methods of water purification based on chlorine and iodine disinfection or boiling are well known, but many situations and personal choice call for the consideration of water treatment equipment. Federal agencies specifically involved in responding to questions and problems relating to microbiological purifier equipment include:

- Registration Division, Office of Pesticide Programs (OPP), Environmental Protection Agency (EPA): registration of microbiological purifiers (using chemicals);
- Compliance Monitoring Staff, EPA: control of microbiological purifier device claims (non-registerable products such as ultraviolet units, ozonators, chlorine generators, others);
- U.S. Army Medical Bioengineering Research and Development Laboratory (USAMBRDL), U.S. Army Natick Research and Development Center and other Army and military agencies: research and development for possible field applications;
- Criteria and Standards Division, Office of Drinking Water (ODW), EPA: Consideration of point-of-use technology as acceptable technology under the Primary Drinking Water Regulations; consumer information and service;

- Drinking Water Research, Water Engineering Research Laboratory (WERL), EPA; responsible for water treatment technology research;

- Microbiology Branch, Health Effects Research Laboratory (HERL), EPA; responsible for study of health effects related to drinking water filters.

A number of representatives of the above mentioned agencies provided excellent participation in the task force to develop microbiological testing protocols for water purifiers. Major participation was also provided by the following:

- A technical representative from the Water Quality Association;

- A technical representative from the Environmental Health Center, Department of Health and Welfare of Canada; and

- An associate professor (microbiology) from the University of Arizona.

1.2 Basic Principles

1.2.1 Definition

As set forth in EPA Enforcement Strategy and as supported by a Federal Trade Commission (FTC) decision (FTC v. Sibco Products Co., Inc., et al., Nov. 22, 1965), a unit, in order to be called a microbiological water purifier, must remove, kill or inactivate all types of disease-causing microorganisms from the water, including bacteria, viruses and protozoan cysts so as to render the processed water safe for drinking. Therefore, to qualify, a microbiological water purifier must treat or remove all types of challenge organisms to meet specified standards.

1.2.2 General Guide

The standard and protocol will be a general guide and, in some cases, may present only the minimum features and framework for testing. While basic features of the standard and protocol have been tested, it was not feasible to conduct full-fledged testing for all possible types of units. Consequently, protocol users should include pre-testing of their units in a testing rig, including the sampling techniques to be used. Where users of the protocol find good reason to alter or add to the guide in order to meet specific operational problems, to use an alternate organism or laboratory procedure, or to respond to innovative treatment units without decreasing the level of

testing or altering the intent of the protocol, they should feel free to do so. For example, the OPP Registration Division might find it necessary to amend the guide somewhat for different types of treatment units. Another example would be ultraviolet (U.V.) units, which may have specific requirements in addition to the guide protocol.

1.2.3 Performance-Based

The standard will be performance-based, utilizing realistic worst case challenges and test conditions and use of the standard shall result in water quality equivalent to that of a public water supply meeting the microbiological requirements and intent of the National Primary Drinking Water Regulations.

1.2.4 Exceptions

A microbiological water purifier must remove, kill or inactivate all types of pathogenic organisms if claims are made for any organism. However, an exception for limited claims may be allowed for units removing specific organisms to serve a definable environmental need (i.e., cyst reduction units which can be used on otherwise disinfected and microbiologically safe drinking water, such as a disinfected but unfiltered surface water containing cysts. Such units are not to be called microbiological water purifiers and should not be used as sole treatment for an untreated raw water.)

1.2.5 Not to Cover Non-Microbiological Reduction Claims

The treatment of water to achieve removal of a specific chemical or other non-microbiological substances from water will not be a part of this standard. National Sanitation Foundation (NSF) Standards 42 (Aesthetic Effects) and 53 (Health Effects) provide partial guides for chemical removal and other claims testing.

1.2.6 Construction and Information Exclusions

While the standard recommends safe, responsible construction of units with non-toxic materials for optimum operation, all such items and associated operational considerations are excluded as being beyond the scope of the standard. Included in the exclusion are materials of construction, electrical and safety aspects, design and construction details, operational instructions and information, and mechanical performance testing.

1.2.7 Research Needs Excluded

The guide standard and protocol must represent a practical testing program and not include research recommendations. For example, consideration of mutant organisms or differentiation between injured and dead organisms would be research items at this time and not appropriate for inclusion in the standard.

1.2.8 Not to Consider Sabotage

Esoteric problems which could be presented by a variety of hypothetical terrorist (or wartime) situations, would provide an unnecessary complication, and are not appropriate for inclusion in the standard.

1.2.9 Continuity

The guide standard and protocol will be a living document, subject to revision and updating with the onset of new technology and knowledge. It is recommended that the responsible authorities for registration and drinking water quality review potential needs every two to three years and reconvene the task force upon need or upon request from the water quality industry, to review and update the standard and testing protocol.

1.3 Treatment Units Coverage

1.3.1 Universe of Possible Treatment Units

A review of treatment units that might be considered as microbiological purifiers discloses a number of different types covering treatment principles ranging from filtration and chemical disinfection to ultraviolet light radiation.

1.3.2 Coverage of This Standard

In view of the limited technical data available and in order to expedite the work of the task force, the initial coverage is limited, on a priority basis, to three basic types of microbiological water purifiers or active components with their principal means of action as follows:

1.3.2.1 Ceramic Filtration Candles or Units (may or may not contain a chemical bacteriostatic agent)

Filtration, and adsorption, and chemical anti-microbial activity if a chemical is included.

1.3.2.2 Halogenated Resins and Units

Chemical disinfection and possibly filtration. (Note: While not included in this guide standard, halogen products for disinfection or systems using halogen addition and fine filtration may be tested using many of its elements, i.e., test water parameters, microbiological challenge and reduction requirements, analytical techniques and other pertinent elements.)

1.3.2.3 Ultraviolet (UV) Units

UV irradiation with possible add-on treatment for adsorption and filtration (not applicable to UV units for treating potable water from public water supply systems).

1.3.3 Application of Principles to Other Units

While only three types of units are covered in this standard, the principles and approaches outlined should provide an initial guide for the testing of any of a number of other types of units and/or systems for the microbiological purification of contaminated water.

2. PERFORMANCE REQUIREMENTS

2.1 Microbiological Water Purifier

In order to make the claim of "microbiological water purifier," units must be tested and demonstrated to meet the microbiological reduction requirements of Table 1 according to the test procedures described in Section 3 (Appendix N-1) for the specific type of unit involved.

2.2 Chemical Health Limits

Where silver or some other pesticidal chemical is used in a unit, that chemical concentration in the effluent water must meet any National Primary Drinking Water Maximum Contaminant Level (MCL), additional Federal guidelines or otherwise be demonstrated not to constitute a threat to health from consumption or contact where no MCL exists.

2.3 Stability of Pesticidal Chemical

Where a pesticidal chemical is used in the treatment unit, the stability of the chemical for disinfectant effectiveness should be sufficient for the potential shelf life and the projected use life of the unit based on manufacturer's data. Where stability cannot be assured from historical data and information, additional tests will be required.

2.4 Performance Limitations

2.4.1 Effective Lifetime

The manufacturer must provide an explicit indication or assurance of the unit's effective use lifetime to warn the consumer of potential diminished treatment capability either through:

a. Having the unit terminate discharge of treated water, or

b. Sounding an alarm, or

c. Providing simple, explicit instruction for servicing or replacing units within the recommended use life (measurable in terms of volume throughput, specific time frame or other appropriate method).

2.4.2 Limitation on Use of Iodine

EPA policy initially developed in 1973 and reaffirmed in 1982 (memo of March 3, 1982 from J. A. Cotruvo to G. A. Jones, subject: "Policy on Iodine Disinfection") is that iodine disinfection is acceptable for short-term or limited or emergency use but that it is not recommended for long-term or routine community water supply application where iodine-containing species may remain in the drinking water.

3. MICROBIOLOGICAL WATER PURIFIER TEST PROCEDURES

3.1 Purpose

These tests are performed on ceramic filtration candles or units, halogenated resins and units and ultraviolet (UV) units in order to substantiate their microbiological removal capabilities over the effective use life of the purifier as defined in Table 1 and, where a pesticidal chemical is used, to determine that said chemical is not present in the effluent at excessive levels (see Section 3.5.3.4, Appendix N).

3.2 Apparatus

Three production units of a type are to be tested, simultaneously, if feasible; otherwise, in a manner as similar to that as possible.

Design of the testing rig must parallel and simulate projected field use conditions. For plumbed-in units a guide for design of the test rig may be taken from "Figure 1: Test Apparatus-Schematic" (p. A-2 of Standard Number 53 "Drinking Water Treatment Units -- Health Effects," National Sanitation Foundation). Otherwise, the test rig must be designed to simulate field use conditions (worst case) for the unit to be tested.

3.3 Test Waters -- Non-Microbiological Parameters

In addition to the microbiological influent challenges, the various test waters will be constituted with chemical and physical characteristics as follows:

3.3.1 Test Water #1 (General Test Water)

This water is intended for the normal non-stressed (non-challenge) phase of testing for all units and shall have specific characteristics which may easily be obtained by the adjustment of many public system tap waters, as follows:

a. It shall be free of any chlorine or other disinfectant residual;

b. pH -- 6.5 - 8.5;

c. Total Organic Carbon (TOC) 0.1 - 5.0 mg/L;

d. Turbidity 0.1 - 5 NTU;

e. Temperature 20 C ° .5 C; and

f. Total Dissolved Solids (TDS) 50 - 500 mg/L.

3.3.2 Test Water #2 (Challenge Test Water/Halogen Disinfection)

This water is intended for the stressed challenge phase of testing where units involve halogen disinfectants (halogen resins or other units) and shall have the following specific characteristics:

a. Free of chlorine or other disinfectant residual;

b. (1) pH 9.0 ° .2, and

(2) for iodine-based units a pH of 5.0 ° .2 (current information indicates that the low pH will be the most severe test for virus reduction by iodine disinfection);

c. Total Organic Carbon (TOC) not less than 10 mg/L;

d. Turbidity not less than 30 NTU;

e. Temperature 4 C ° 1 C; and

f. Total Dissolved Solids (TDS) 1,500 mg/L ° 150 mg/L.

3.3.3 Test Water #3 (Challenge Test Water/Ceramic Candle or Units With or Without Silver Impregnation)

This water is intended for the stressed challenge phase of testing for the indicated units but not for such units when impregnated with a halogen disinfectant (for the latter, use Test Water #2). It shall have the following specific characteristics:

a. It shall be free of any chlorine or other disinfectant residual;

b. pH 9.0 ° .2;

c. Total Organic Carbon (TOC) -- not less than 10 mg/L;

d. Turbidity -- not less than 30 NTU;

e. Temperature 4 C ° 1 C; and

f. Total Dissolved Solids (TDS) -- 1,500 mg/L ° 150 mg/L.

3.3.4 Test Water #4 (Challenge Test Water for Ultraviolet Units)

This water is intended for the stressed phase of testing for UV units and shall have the following specific characteristics:

a. Free of chlorine or other disinfectant residual;

b. pH 6.5 - 8.5;

c. Total Organic Carbon (TOC) -- not less than 10 mg/L;

d. Turbidity -- not less than 30 NTU;

e. Temperature 4 C ± 1 C;

f. Total Dissolved Solids (TDS) -- 1,500 mg/l ± 150 mg/L;

g. Color U.V. absorption (absorption at 254 nm) -- Sufficient para-hydroxybenzoic acid (PHBH) to be just below the trigger point of the warning alarm on the U.V. unit. (Note that Section 3.5.1.1 provides an alternative of adjusting the U.V. lamp electronically, especially when the U.V. lamp is preceded by activated carbon treatment.)

3.3.5 Test Water #5 (Leaching Test Water for Units Containing Silver)

This water is intended for stressed leaching tests of units containing silver to assure that excess levels of silver will not be leached into the drinking water. It shall have the following specific characteristics:

a. Free of chlorine or other disinfectant residual;

b. pH -- 5.0 ± 0.2;

c. Total Organic Carbon (TOC) -- approximately 1.0 mg/L;

d. Turbidity -- 0.1 - 5 NTU;

e. Temperature -- 20 C ± 5 C; and

f. Total Dissolved Solids (TDS) -- 25 - 100 mg/L.

3.3.6 Recommended Materials for Adjusting Test Water Characteristics

a. pH: inorganic acids or bases (i.e., HCl, NaOH);

b. Total Organic Carbon (TOC): humic acids;

c, Turbidity: A.C. Fine Test Dust (Park No. 1543094)

from: A.C. Spark Plug Division
General Motors Corporation
1300 North Dort Highway
Flint, Michigan 48556;

d. Total Dissolved Solids (TDS): sea salts, Sigma Chemical Co., S9883 (St. Louis,MO) or another equivalent source of TDS;

e. Color U.V. Absorption: p-hydroxybenzoic acid (grade: general purpose reagent).

3.4 Analytical Methods

3.4.1 Microbiological Methods

Methods in this section are considered "state-of-the-art" at the time of its preparation and subsequent improvements should be expected. Methods used for microbiological analyses should be compatible with and equal to or better than those given below.

3.4.1.1 Bacterial Tests

a. Chosen Organism: Klebsiella terrigena (ATCC-33257).

b. Method of Production: Test organism will be prepared by overnight growth in nutrient broth or equivalent to obtain the organism in the stationary growth phase (Reference: Asburg, E.D., Methods of Testing Sanitizers and Bacteriostatic Substances In: Disinfection, Sterilization and Preservation, Seymour S. Block, ed., pp. 964-980, 1983). The organism will be collected by centrifugation and washed three times in phosphate buffered saline before use. Alternatively, the organisms may be grown overnight on nutrient agar slants or equivalent and washed from the slants with phosphate buffered saline. The suspensions should be filtered through sterile Whatman Number 2 filter paper (or equivalent) to remove any bacterial clumps. New batches of organisms must be prepared daily for use in challenge testing.

c. State of Organism: Organisms in the stationary growth phase and suspended in phosphate buffered saline will be used.

d. Assay Techniques: Assay may be by the spread plate, pour plate or membrane filter technique on nutrient agar, M.F.C. or m-Endo medium (Standard Methods for the Examination of Water and Wastewater, 16th edition, 1985, APHA). Each sample dilution will be assayed in triplicate.

3.4.1.2 Virus Tests

a. Chosen Organisms: Poliovirus type 1 (LSc) (ATCC-VR-59), and Rotavirus Strain SA-11 (ATCC-VR-899) or WA (ATCC-VR-2018).

b. Method of Production: All stocks should be grown by a method described by Smith and Gerba (in Methods in Environmental Virology, pp. 15-47, 1982) and purified by the procedure of Sharp, et al. (Appl. Microbiol., 29:94-101, 1975), or similar procedure (Berman and Hoff, Appl. Environ. Microbiol., 48:317-323, 1984), as these methods will produce largely monodispersed virion particles.

c. State of the Organism: Preparation procedure will largely produce monodispersed particles.

d. Assay Techniques: Poliovirus type 1 may be grown in the BGM, MA-104 or other cell line which will support the growth of this virus. The rotaviruses are best grown in the MA-104 cell line. Since both viruses can be assayed on the MA-104 cell line, a challenge test may consist of equal amounts of both viruses as a mixture (i.e., the mixture must contain at least 1.0×10^7/mL of each virus). Assays may be as plaque forming units (PFU) or as immunofluorescence foci (IF) (Smith and Gerba, In: Methods in Environmental Virology, pp. 15-47, 1982). Each dilution will be assayed in triplicate.

3.4.1.3 Cyst Tests

a. Chosen Organism

1. Giardia lamblia or the related organism, Giardia muris, may be used as the challenge cyst.

2. Where filtration is involved, tests with 4-6 micron spheres or particles have been found to be satisfactory and may be used as a substitute for tests of occlusion using live organisms (see Table 1). Spheres or particles may only be used to evaluate filtration efficacy. Disinfection efficacy can only be evaluated with the use of viable Giardia cysts.

b. Method of Production: Giardia muris may be produced in laboratory mice and Giardia lamblia may be produced in Mongolian gerbils; inactivation results based on excystation measurements correlate well with animal infectivity results.

c. State of the Organism: Organisms may be separated from fecal material by the procedure described by Sauch (Appl. Environ. Microbiol., 48:454-455, 1984) or by the procedure described by Bingham, et al. (Exp. Parasitol., 47:284-281, 1979).

d. Assay Techniques: Cysts are first reconcentrated (500 ml., minimum sample size) according to the method of Rice, Hoff and Schaefer (Appl. Environ. Microbiol., 43:250-251, 1982). The excystation method described by Schaefer, et al. (Trans., Royal Soc. of Trop. Med. & Hyg. 78:795-800, 1984) shall be used to evaluate Giardia muris cyst viability. For Giardia lamblia cysts, the excystation method described by Bingham and Meyer (Nature, 277:301-302, 1979) or Rice and Schaefer (J. Clin. Microbiol., 14:709-710, 1981) shall be used. Cyst viability may also be determined by an assay method involving the counting of trophozoites as well as intact cysts (Bingham, et al., Exp. Parasitol., 47:284-291, 1979).

3.4.2 Chemical and Physical Methods

All physical and chemical analyses shall be conducted in accordance with procedures in Standard Methods for the Examination of Water and Wastewater, 16th Edition, American Public Health Association, or equivalent.

3.5 Test Procedures

3.5.1 Procedure - Plumbed-in Units

a. 1. Install three production units of a type as shown in Figure 1 and condition each unit prior to the start of the test in accordance with the manufacturer's instructions with the test water without the addition of the test contaminant. Measure the flow rate through each unit. The unit shall be tested at the maximum system pressure of 60 psig static and flow rate will not be artificially controlled.

2. Test waters shall have the defined characteristics continuously except for test waters 2, 3 and 4 with respect to turbidity. The background non-sampling turbidity level will be maintained at 0.1-5 NTU but the turbidity shall be increased to the challenge level of not less than 30 NTU in the following manner:

   - In the "on" period(s) prior to the sampling "on" period.

   - In the sampling "on" period when the sample actually will be taken. (Note: at least 10 unit void volumes of the 30 NTU water shall pass through the unit prior to actual sampling so as to provide adequate seasoning and uniformity before sample collection.)

b. 1. Use appropriate techniques of dilution and insure continual mixing to prepare a challenge solution containing the bacterial contaminant. Then spike test water continuously with the influent concentration specified in Table 1.

2. Use appropriate techniques to prepare concentrated virus and Giardia suspensions. Feed these suspensions into the influent stream so as to achieve the influent concentrations specified in Table 1 in the following manner:

   - In the "on" period(s) prior to the sampling "on" period.

   - In the sampling "on" period when the sample actually will be taken. (Note: at least 10 unit void volumes of seeded water shall pass through the unit prior to sampling so as to provide adequate seasoning and uniformity before sample collection.)

c. Purge the system of the uncontaminated water with a sufficient flow of contaminated test water. Start an operating cycle of 10 percent on, 90 percent off with a 15 to 40 minute cycle (Example: 3 minutes on, 27 minutes off) with the contaminated test water. This cycle shall be continued for not more than 16 hours per day (minimum daily rest period of 8 hours). The total program shall extend to 100% of estimated volume capacity for halogenated resins or units and for 10-1/2 days for ceramic candles or units and U.V. units.

d. Sampling: Samples of influent and effluent water at the specified sampling points shall be collected as shown below for the various units; these are minimum sampling plans which may be increased in number by the investigator. All samples shall be collected in duplicate from the flowing water during the sampling "on" portion of the cycle and they shall be one "unit void volume" in quantity (or of appropriate quantity for analysis) and represent worst case challenge conditions. Effluent samples shall usually be collected near the middle of the sampling "on" period (or the whole volume during one "on" period) except for samples following the specified "stagnation" periods, for which sampling shall be conducted on the first water volume out of the unit. Each sample will be taken in duplicate and shall be retained and appropriately preserved, if required, for chemical or microbiological analysis in the event verification is required. (For units where the volume of a single "on" period is insufficient for the required analysis, samples from successive "on" periods may be accumulated until a sufficient volume has been collected.)

1(a). Sampling Plan: Halogenated Resins or Units (Non-iodine Based)

Test Point (% of Estimated Capacity)	Test Water	Tests		
		Influent Background	Active Agent/ Residual	Microbiological
Start	General	X	X	X
25%			X	X
50%			X	X
After 48 hours stagnation			X	X
60%	Chal-		X	X
75%	lenge		X	X
After 48 hours stagnation	pH - 9.0 ° 0.2		X	X
100%			X	X

1(b). Sampling Plan: Iodinated Resins or Units

Test Point (% of Estimated Capacity)	Test Water	Tests: Influent Background	Tests: Active Agent/ Residual	Tests: Microbiological
Start	General	X	X	X
25%			X	X
50%			X	X
After 48 hours stagnation			X	X
60%	Chal-		X	X
75%	lenge		X	X
After 48 hours stagnation	pH - 9.0 ` 0.2		X	X
90%	Chal-		X	X
100%	lenge		X	X
After 48 hours stagnation	pH - 5.0 ` 0.2		X	X

2. Sampling Plan: Ceramic Candles or Units and U.V. Units

Test Point	Test Water	Tests: Influent Background	Tests: Microbiological
Start	General	X	X
Day 3 (middle)			X
Day 6 (middle)			X
After 48 hours stagnation			X
Day 7 (middle)			X
Day 8 (near end)	Chal-		X
After 48 hours stagnation	lenge		X
Day 10-1/2			X

(Note: All days are "running days" and exclude stagnation periods. When the units contain silver, a leaching test shall be conducted as shown in Section 3.5.1.e and silver residual will be measured at each microbiological sampling point.)

e. Leaching Tests for Silverized Units: Where the unit contains silver, additional tests utilizing Test Water #5 will be conducted as follows:

	Tests	
Test Point	Influent Background	Silver/Residual
Start	X	X
Day 2		X
After 48 hours stagnation		X

f. Alternate Sampling Plans:

1. Since some laboratories may find it inconvenient to test some units on a 16 hour on/8 hour off cycle, two alternates are recognized:

   - Go to a shorter operational day but lengthen the days of test proportionally

   - Use up to 20 percent "on"/80 percent "off" for a proportionally shorter operational day

2. Sampling points must be appropriately adjusted in any alternate sampling plan.

g. Application of Test Waters: The application of test waters is designed to provide information on performance under both normal and stressed conditions; it should be the same or equivalent to the following:

1. a. Halogenated Resins or Units (Non-iodine based) --

First 50% of test period:	Test Water 1 (General)
Last 50% of test period:	Test Water 2 (Challenge) (pH - 9.0 ˜ 0.2)

b. Iodinated Resins or Units --

First 50% of test period:	Test Water 1 (General)
Next 25% of test period:	Test Water 2 (Challenge) (pH - 9.0 ˜ 0.2)
Last 25% of test period:	Test Water 2 (Challenge) (but with pH - 5.0 ˜ 0.2)

2. Ceramic Candles or Units --

First 6 days of testing:	Test Water 1 (General)

Last 4-1/2 days of testing: Test Water 3 (Challenge)

3. Ultraviolet (U.V.) Units --

First 6 days of testing: Test Water 1 (General)
Last 4-1/2 days of testing: Test Water 4 (Challenge)

h. Analyses and monitoring:

1. Microbiological sampling and analysis shall be conducted of the specified influent and effluent sampling points during each indicated sampling period.

2. Test Water Monitoring: The specified parameters of the various test waters (see Section 3.3) will be measured and recorded at each microbiological sampling point; the specified parameters will be measured at least once on non-sampling days when the units are being operated.

3. Background chemical analyses of influent water shall be conducted at least once at the start of each test period to determine the concentration of the U.S. EPA primary inorganic contaminants, secondary contaminants and routine water parameters, not otherwise covered in the described test waters.

4. In addition, quality assurance testing shall be conducted for the seed bacteria under environmental conditions on the first and last days of testing to make sure that there is no significant change over the test day. Populations will be measured (for example, as dispersed in the supply tank) at the beginning and end of the test day to detect possible incidental effects such as proliferation, die-off, adsorption to surfaces, etc. Relatively stable bacterial seed populations are essential to an acceptable test program.

5. When a unit contains a halogen or silver, the active agent residual will be measured in the effluent at each microbiological test (sampling) point.

6. Silver will additionally be measured three times in the effluent as specified in Section 3.5.1.e.

i. Neutralization of Disinfection Activity: Immediately after collection, each test sample must be treated to neutralize residual disinfectant. For halogen- and silver-based disinfectants this may be done by addition of thioglycollate-thiosulfate neutralizer solution (Chambers, et al., J. Amer. Water Works Assoc., 54:208-216, 1962). This solution should be prepared daily. All results are invalid unless samples are neutralized immediately upon collection.

j. Special Provisions for Ceramic Candles or Units:

1. Provisions for slow flow: Ceramic units may be subject to clogging and greatly reduced flow over the test period. An attempt should be made to maintain manufacturer rated or claimed flow rates, but even at reduced flows the sampling program set forth in Section 3.5.1.d.2 shall be maintained.

2. Cleaning of ceramic units: Units should be cleaned according to manufacturer's directions. Two cleanings should occur during the period of test (in order to prove the unit's durability through the cleaning procedure). However, near the time of microbiological sampling, the units should not be cleaned until after the sampling. Further, no anti-microbial chemical (for cleaning or sanitizing) may be applied to the units during the test period unless the manufacturer specifies the same as part of routine maintenance.

k. Halogenated units or U.V. units with mechanical filtration processes separate from the microbiological disinfection components shall have the mechanical filtration components replaced or serviced when significant flow reduction (clogging) occurs in accordance with the manufacturer's instructions in order to maintain the test flow rate. Units with non-removable mechanical filtration components will be run until flow is below that considered acceptable for consumer convenience. (If premature clogging presents a problem, some specialized units may require a customized test plan.)

l. Special Provisions for Ultraviolet (U.V.) Units:

1. The units will be adequately challenged by the prescribed test waters; consequently they will be operated at normal intensity. However, where the U.V. treatment component is preceded by activated carbon treatment, the output of the U.V. lamp shall be adjusted electronically, such as by reducing the current to the lamp or other appropriate means, to be just above the alarm point. This option shall be available for use under other U.V. configurations, at the choice of the persons responsible for testing, as an alternative to the use of the U.V. absorbent, p-hydroxybenzoic acid.

2. Fail/safe: Units will provide and will be tested for fail/safe warnings in the event of water quality changes or equipment failures which may interfere with its microbiological purification function.

3. Cleaning: Manufacturer's guidance with respect to cleaning will be followed.

3.5.2 Procedure: Non-Plumbed Units

a. General: The basic procedures given in Section 3.5.1 shall be used with necessary adaptations to allow for the specific design of the

unit. In any event, the testing procedures shall provide a test challenge equivalent to those for plumbed-in units.

b. Test conditions and apparatus should be adapted to reflect proposed or actual use conditions in consultation with the manufacturer, including flow rate and number of people to be served per day. In some cases variable flow or other non-standard conditions may be necessary to reflect a worst-case test.

3.5.3 Acceptance and Records

3.5.3.1

To qualify as a microbiological water purifier, all three production units of a type must continuously meet or exceed the reduction requirements of Table 1, within allowable measurement tolerances for not more than ten percent of influent/effluent sample pairs, defined as follows:

Virus:	one order of magnitude
Bacteria:	one order of magnitude
Cysts:	one/half order of magnitude

The geometric mean of all microbiological reductions must meet or exceed the requirements of Table 1. An example is given as follows:

- Unit: iodinated resin.
- Number of sample pairs over the completed test program: 10 per unit -- 3 units = 30.
- Number of allowable sample pairs where log reduction is insufficient: 10% of 30 = 3 sample pairs.
- Allowable minimum log reductions in these 3 pairs:
  - Bacteria - 5 log
  - Virus - 3 log
  - Cyst - 2-1/2 log
- Conclusion: If the geometric mean of all reductions meets or exceeds the requirements of Table 1, the indicated insufficient sample pairs will be allowed.

3.5.3.2 Records

All pertinent procedures and data shall be recorded in a standard format and retained for possible review until the report of results has been completely accepted by review authorities, in no case for less than a year.

3.5.3.3 Scaling Up or Down

Where a manufacturer has several similar units using the same basic technology and parallel construction and operation, it may sometimes be appropriate to allow the test of one unit to be considered representative of others. Where any serious doubt exists, all units of various sizes may require testing. A "rule of three" is suggested as a matter of judgment. Scaling up to three times larger or on-third, based on the size of either the test unit or of its operative element, may be allowed. However, for UV units, any size scale-up must be accompanied by a parallel increase in radiation dose.

3.5.3.4

Where silver or some other chemical is used in the unit, concentrations in the effluent water must meet any National Primary Drinking Water Maximum Contaminant Level (MCL), additional Federal guidelines, or otherwise must not constitute a threat to health where no MCL exists.

APPENDIX N-1

SUMMARY FOR BASIS OF STANDARDS AND TEST WATER PARAMETERS

A. Microbiological Reduction Requirements

1. Bacteria

Current standards for the microbiological safety of drinking water are based on the presence of coliform bacteria of which Klebsiella is a member. Members of the genus Klebsiella are also potential pathogens of man (Vlassof, 1977). Klebsiella terrigena is designated as the test organism since it is commonly found in surface waters (Izard, et al., 1981).

Experience with the use of coliform bacteria to estimate the presence of enteric bacterial pathogens in drinking water as performed over the last 75 years indicates a high degree of reliability. Required testing of more than one bacterial pathogen appears unjustified since viral and Giardia testing will be required. Enteric viruses and Giardia are known to be more resistant to common disinfectants than enteric bacterial pathogens and viruses are more resistant to removal by treatments such as filtration. Thus, any treatment which would give a good removal of both virus and Giardia pathogens would most likely reduce enteric bacteria below levels considered infectious (Jarroll, et al., 1981; Liu, et al., 1971).

The concentration of coliform bacteria in raw sewage is approximately 10^9/100 ml. Concentrations in polluted stream waters have been found to exceed 10^5 per 100 ml (Culp, et al., 1978, Table 10).

Based on the over 10^5/100 ml concentrations observed in highly polluted stream water and a target effluent concentration of less than 1/100 ml, a 6 log reduction is recommended.

2. Virus

In the United States concentrations of enteroviruses are estimated to range from 10^3-10^4/liter in raw sewage (Farrah and Schaub, 1971). Based on this observation it is estimated that natural waters contaminated with raw sewage may contain from 10^1 to 10^2 enteric viruses per liter.

There are currently no standards for viruses in drinking water in the United States. However, EPA has proposed a non-enforceable health-based recommended maximum contaminant level (RMCL) of zero for viruses (EPA, 1985). Several individuals and organizations have developed guidelines for the presence of viruses in drinking water and various experts have proposed standards (WHO, 1979, 1984; Berg, 1971; Melnick, 1976). It has generally been felt that drinking

water should be free of infectious virus since even one virus is potentially infectious and suggested standards are largely based on technological limits of our detection methodology. Guidelines suggested by the World Health Organization (1984) and others recommend that volumes to be tested be in the order of 100-1,000 liters and that viruses be absent in these volumes.

Assuming a target effluent level of less than one virus in 100 liters of water and a concentration of 10^4 enteric viruses in 100 liters of sewage-contaminated waters, the water purifier units should achieve at least 4 logs of virus removal.

The relative resistance of enteric viruses to different disinfectants varies greatly among the enteric viruses and even among members of the same group (i.e., enteroviruses). For example, while f2 coliphage is one of the most resistant viruses to inactivation by chlorine it is one of the most susceptible to inactivation by ozone (Harakeh and Butler, 1984). Ionic conditions and pH can also affect the relative resistance of different viruses to a disinfectant (Engelbrecht, et al., 1980). On this basis it is felt that more than one enteric virus should be tested to ensure the efficacy of any disinfection system. Poliovirus type 1 (Strain LSc) was chosen as one of the test viruses because it has been extensively used in disinfection and environmental studies as representative of the enterovirus family. It is recognized that it is not the most resistant virus to inactivation by chlorine, but is still resistant enough to serve as a useful indicator. Rotavirus is selected as the second test enteric virus since it represents another group of enteric viruses in nucleic acid composition and size. It is also a major cause of viral gastroenteritis and has been documented as a cause of water borne gastroenteritis (Gerba, et al., 1985). The human rotavirus or the similar Simian rotavirus may be used in the test procedure. A net 4-log reduction for a joint challenge of 1×10^7/L each for poliovirus and rotavirus is recommended.

3. Cysts (Protozoan)

Over the past several years, giardiasis has consistently been one of the most frequently reported waterborne diseases transmitted by drinking water in the United States (Craun, 1984). EPA has proposed a RMCL of zero for Giardia (EPA, 1985). Its occurrence has generally been associated with treatment deficiencies including either inadequate or no filtration. Giardiasis has not been known to occur from drinking water produced by well-operated filtration treatment plants. De Walle, et al. (1984), in a study of filtration treatment plant efficiencies, cited percent removals for Giardia in pilot plant tests as follows:

- Rapid filtration with coagulation-sedimentation: 96.6-99.9%;
- Direct filtration with coagulation: 95.9-99.9%.

From this research and from the lack of Giardia cases in systems where adequate filtration exists, a 3-log (99.9%) reduction requirement is considered to be conservative and to provide a comparable level of protection for water purifiers to a well-operated filtration treatment plant.

Data on environmental levels for cysts in natural waters is limited because of the difficulties of sampling and analysis. Unpublished data indicate very low levels from less than 1/L to less than 10/L. Here a 3-log reduction would provide an effluent of less than 1/100 L, comparable to the recommended virus reduction requirements.

Either Giardia lamblia or the related organism, Giardia muris, which is reported to be a satisfactory test organism (Hoff, et al., 1985), may be used as the challenge organism. Tests will be conducted with a challenge of 10^6 organisms per liter for a 3-log reduction.

Where the treatment unit or component for cysts is based on the principle of occlusion filtration alone, testing for a 3-log reduction of 4-6 micron particles or spheres (National Sanitation Foundation Standard 53, as an example) is acceptable. Difficulties in the cyst production and measurement technologies by lesser-equipped laboratories may require the use of such alternative tests where applicable.

B. Microbiological Purifier Test Procedures

1. Test Waters

a. The general test water (test water #1) is designed for the normal, non-stressed phase of testing with characteristics that may easily be obtained by the adjustment of many public system tap waters.

b. Test water #2 is intended for the stressed phase of testing where units involve halogen disinfectants.

1. Since the disinfection activity of some halogens falls with a rising pH, it is important to stress test at an elevated pH. The recommended level of 9.0 ˜ 0.2, while exceeding the recommended secondary level (Environmental Protection Agency, 1984) is still within a range seen in some natural waters (Environmental Protection Agency, 1976). However, for iodine-based units, a second stressful condition is provided -- a pH of 5.0 ˜ 0.2 since current information indicates that the disinfection activity of iodine falls with a low pH (National Research Council, 1980). While beneath the recommended secondary level (Environmental Protection Agency, 1984) a pH of 5.0

is not unusual in natural waters (Environmental Protection Agency, 1976).

2. Organic matter as total organic carbon (TOC) is known to interfere with halogen disinfection. While this TOC is higher than levels in many natural waters, the designated concentration of 10 mg/L is cited as typical in stream waters (Culp/Wesner/Culp, 1978).

3. High concentrations of turbidity can shield microorganisms and interfere with disinfection. While the recommended level of not less than 30 NTU is in the range of turbidities seen in secondary wastewater effluents, this level is also found in many surface waters, especially during periods of heavy rainfall and snow melt (Culp/Wesner/Culp, 1978).

4. Studies with Giardia cysts have shown decreasing halogen disinfection activity with lower temperatures (Jarroll, et al., 1980); 4 C, a common low temperature in many natural waters, is recommended for the stress test.

5. The amount of dissolved solids (TDS) may impact the disinfection effectiveness of units that rely on displaceable or exchange elements by displacement of halogens or resins, or it may interfere with adsorptive processes. While TDS levels of 10,000 mg/L are considered unusable for drinking, many supplies with over 2,000 mg/L are used for potable purposes (Environmental Protection Agency, 1984). The recommended level of 1,500 mg/L represents a realistic stress challenge.

c. Test water #3 is intended for the stressed phase of testing of ceramic filtration candles or units with or without silver impregnation.

1. Since viruses are typically eluted from adsorbing media at high pHs (Environmental Protection Agency, 1978) it may be concluded that a high pH will provide the most stressful testing for a ceramic-type unit; consequently, the high natural water pH of 9.0 is recommended.

2. Expert opinion also holds that organic material will interfere with adsorption of viruses. Thus, a high total organic carbon level of not less than 10 mg/L is recommended.

3. Turbidity may enhance the entrapment and removal of microorganisms but it also may stimulate "short-circuiting" through some units. A turbidity level of 30 NTU will provide stress at time of sampling but the

non-sampling level of 0.1-5 NTU will allow routine operation of units.

4. Expert opinion holds that low water temperatures and high TDS would most likely interfere with virus reduction by adsorption; consequently, a 4 C temperature and 1,500 mg/L TDS are recommended.

d. Test water #4 is intended for the stressed phase of testing for ultraviolet (UV) units.

1. In general, high TOC, turbidity and TDS and low temperature are considered most stressful for UV, and the indicated challenge levels are the same as for test water #2.

2. The pH is not critical and may range from 6.5 to 8.5.

3. In order to test the UV units at their most vulnerable stage of operation, a color challenge (light absorption at 254 nm) is to be maintained at a level where UV light intensity is just above the unit's low intensity warning alarm point. However, an alternate to the absorption challenge is provided through adjusting the light intensity output of the UV lamp electronically by reducing current to the lamp, or other appropriate means, to be just above the alarm point; this approach would be particularly necessary where the UV lamp is preceded by activated carbon treatment.

e. Test water #5 is intended for the stressed leaching tests of units containing silver. Low pH, TOC, turbidity, and TDS and higher temperature are felt to be the characteristics associated with increased leachability. The recommended pH of 5.0 ± .2, while being beneath the recommended secondary range of 6.5-8.5 (Environmental Protection Agency, 1984) is still found in some natural waters.

2. Test Procedures

The plan for testing and sampling is designed to reveal unit performance under both "normal" and "stressed" operating conditions. The stressed phase would utilize a set of water quality and operations conditions to give the units a realistic worst case challenge. Testing plans for a specific model might involve modifications to the recommended plan; more samples could be taken and analyzed; more units could be studied. The principle of demonstrating adequate performance even under realistic worst case conditions should be maintained and the final selected test procedures should be agreed as between investigators and reviewers or regulators.

While some aspects of the testing procedures have been utilized in actual experiments, the proposed protocol has not been verified or utilized for the various units that may be considered. Consequently, investigators and users of this protocol may find reasons to alter some aspects through their practical experience; needed changes should be discussed and cleared with involved reviewers/-regulators.

REFERENCES:

Berg, G. Integrated approach to the problem of viruses in water. J. ASCE, Sanit. Eng. Div. 97:867-882, 1971.

Culp/Wesner/Culp. Guidance for planning the location of water supply intakes downstream from municipal wastewater treatment facilities. EPA Report, Office of Drinking Water. Washington, DC, 1978.

Craun, G. F. 1984. Waterborne outbreaks of giardiasis: Current status. In: Giardia and giardiasis. D. L. Erlandsen and E. A. Meyer Eds., Plenum Press, New York, pp. 243-261, 1984.

DeWalle, F. B.; J. Engeset; Lawrence, W. Removal of Giardia lamblia cyst by drinking water treatment plants. Report No. EPA-600/52-84-069, Office of Research and Development, Cincinnati, OH, 1984.

Engelbrecht, R. S., et al. Comparative inactivation of viruses by chlorine. Appl. Environ. Microbiol. 40:249-256, 1980.

Environmental Protection Agency. Quality criteria for water. Washington, DC, 1976.

Environmental Protection Agency. National secondary drinking water regulations. EPA-570/9-76-000, Washington, DC, 1984.

Environmental Protection Agency. National primary drinking water regulations; synthetic organic chemicals, inorganic chemicals and microorganisms; Proposed rule. Federal Register, Nov. 13, 1985.

Farrah, S. R., and S. A. Schaub. Viruses in wastewater sludges. In: Viral Pollution of the Environment, G. Berg, Ed. CRC Press, Boca Raton, Florida. pp. 161-163, 1983.

Gerba, C. P.; Rose, J. B.; Singh, S. N. Waterborne gastroenteritis and viral hepatitis. CRC Critical Rev. Environ. Contr. 15:213-236, 1985.

Harakeh, M.; Butler, M. Inactivation of human rotavirus, SA-11 and other enteric viruses in effluent by disinfectants. J. Hyg. Camb. 93:157-163, 1984.

Hoff, J. C.; Rice, E. W.; Schaefer, F. W. Comparison of animal infectivity and excystation as measures of Giardia muris cyst inactivation by chlorine. Appl. Environ. Microbiol. 50:1115-1117, 1985.

Izard, D.; Farragut, C.;Gavini, F.; Kersters, K.; DeLey, J.; Leclerc, H. Klebsiella terrigena, a new species from water and soil. Intl. J. Systematic Bacteriol. 31:116-127, 1981.

Jakubowski, W. Detection of Giardia cysts in drinking water. In: Giardia and Giardiasis, Erlandsen, S. L.; Meyer, E. A. Eds., Plenum Press, NY. pp. 263-286, 1984.

Jarroll, E. L.; Bingham, A. K.; Meyer, E. A. Giardia cyst destruction: Effectiveness of six small-quantity water disinfection methods. Am. J. Trop. Med. 29:8-11, 1980

Jarroll, E. L.; Bingham, A. K.; Meyer, E. A. Effect of chlorine on Giardia cyst viability. Appl. Environ. Microbiol. 43:483-487, 1981.

Liu, O. C., et al. Relative resistance of 20 human enteric viruses to free chlorine in Potomac River water. Proceedings of 13th Water Quality Conference Snoeyink, V.; Griffin, V. Eds., pp. 171-195, 1971.

Melnick, J. L. Viruses in water. In: Viruses in Water Berg, G.; Bodily, H. L.; Lennette, E. H.; Melnick, J. L.; Metclaf T. G., Eds. Amer. Public Hlth. Assoc., Washington, DE, pp. 3-11, 1976.

National Research Council. The disinfection of drinking water, In: Drinking Water and Health, Volume 2. Washington, DC, pp. 5-137, 1980.

National Sanitation Foundation. Drinking water treatment units: Health effects. Standard 53. Ann Arbor, MI, 1982.

Vlassoff, L. T. Klebsiella. In: Bacterial Indicators/Health Hazards Associated with Water Hoadley, A. W.; Dutka, B. J., Eds. American Society for Testing and Materials, Philadelphia, PA. pp. 275-288, 1977.

World Health Organization. Human Viruses in Water, Technical Support Series 639, World Health Organization, Geneva, 1979.

World Health Organization. Guidelines for Drinking Water Quality. Volume 1. Recommendations. World Health Organization, Geneva, 1984.

APPENDIX N-2

LIST OF PARTICIPANTS: TASK FORCE ON GUIDE STANDARD AND PROTOCOL FOR TESTING MICROBIOLOGICAL WATER PURIFIERS

Stephen A. Schaub, Chairman -- U.S. Army Medical Bioengineering Research and Development Laboratory (USAMBRDL), Fort Detrick, Maryland 21701, FTS: 8/935-7207 -- Comm: 301/663-7207.

Frank A. Bell, Jr., Secretary -- Criteria and Standards Division, Office of Drinking Water (WH-550), Environmental Protection Agency, Washington, D.C. 20460, Phone: 202/382-3037.

Paul Berger, Ph.D. -- Criteria and Standards Division, Office of Drinking Water (WH-550), Environmental Protection Agency, Washington, D.C. 20460, Phone: 202/382-3039.

Art Castillo -- Disinfectants Branch, Office of Pesticide Programs (TS-767C0, Environmental Protection Agency, Washington, D.C. 20460, Phone: 703/557-3695.

Ruth Douglas -- Disinfectants Branch, Office of Pesticide Programs (TS-767C), Environmental Protection Agency, Washington, D.C. 20460, Phone: 703/557-3675.

Al Dufour -- Microbiology Branch, Health Effects Research Laboratory, Environmental Protection Agency, 26 W. St. Clair Street, Cincinnati, Ohio 45268, Phone: FTS: 8/684-7870 -- Comm: 513/569-7870.

Ed Geldreich -- Chief, Microbiological Treatment Branch, Water Engineering Research Laboratory, Environmental Protection Agency, 26 W. St. Clair Street, Cincinnati, Ohio 45268, Phone: FTS: 8/684-7232 -- Comm: 513/569-7232.

Charles Gerba -- Associate Professor, Department of Microbiology and Immunology, University of Arizona, Tucson, Arizona 85721, Phone: 602/621-6906.

John Hoff -- Microbiological Treatment Branch, Water Engineering Research Laboratory, Environmental Protection Agency, 26 W. St. Clair Street, Cincinnati, Ohio 45268, Phone: FTS: 8/684-7331 -- Comm: 513/569-7331.

Art Kaplan -- Office of Research and Development (RD-681) Environmental Protection Agency, Washington, D.C. 20460, Phone: 202/382-2583.

Bala Krishnan -- Office of Research and Development (RD-681) Environmental Protection Agency, Washington D.C. 20460, Phone: 202/382-2583.

John Lee -- Disinfectants Branch, Office of Pesticide Programs (TS-767C)

Environmental Protection Agency, Washington, D.C. 20460, Phone: 703/557-3663.

Dorothy Portner -- Disinfectants Branch, Office of Pesticide Programs (TS-767-C), Environmental Protection Agency, Washington, D.C. 20460, Phone: 703/557-0484.

Don Reasoner -- Microbiological Treatment Branch, Water Engineering Research Laboratory, Environmental Protection Agency, 26 W. St. Clair Street, Cincinnati, Ohio 45268, Phone: 312/654-4000.

P. Reguanthan (Regu) -- Everpure, Inc., 660 N. Blackhawk Drive, Westmont, Illinois 60559, Phone: 312/654-4000.

David Stangel -- Policy and Analysis Branch, Office of Compliance Monitoring, Environmental Protection Agency, Washington, D.C., Phone: 202/382-7845.

Richard Tobin -- Monitoring and Criteria Division, Environmental Health Center, Department of Health and Welfare of Canada, Tunney's Pasture, Ottawa, Ontario, K1A 0L2, Canada, Phone: 613/990-8982.

APPENDIX N-3

RESPONSE BY REVIEW SUBCOMMITTEE[1] TO PUBLIC COMMENTS ON GUIDE STANDARD AND PROTOCOL FOR TESTING MICROBIOLOGICAL WATER PURIFIERS

A. Recommendation for the use of Giardia lamblia cysts as a replacement for Giardia muris cysts as the protozoan cyst test organisms.

Recommendation:

The subcommittee concurs with the recommendation and further endorses the use of Giardia lamblia as the preferred cyst test for evaluation of all treatment units and devices. Obviously the use of the protozoan organisms of actual health concern in testing is most desirable. Anyone finding the Giardia lamblia strain feasible for testing and cost-effective to work with is encouraged to use same instead of Giardia muris.

B. Substitution of 4-6 micron bead or particle tests as an alternate option instead of the Giardia cysts for evaluating devices that rely strictly on occlusion filtration for microbiological removal: Several commenters criticized the use of beads or particles (e.g., A.C. fine dust) and recommended only use of live Giardia cysts for performance tests.

Discussion:

The subcommittee recognizes and favors the use of the natural human parasite, Giardia lamblia, but was not aware of any convincing scientific data which would disallow the optional use of testing with beads or particles for units or devices using only occlusion filtration to remove microorganisms. Previous development of the National Sanitation Standard (NSF) 53 (1982) requirement for cyst reduction (using 4-6 micron particles as cyst models) was based on engineering and scientific opinion and experimental evidence at that time. Specifically, Logsdon[1] used radioactive cyst models in the initial phase of a study of removal efficiencies for diatomaceous earth filters; subsequent experiments with Giardia muris cysts confirmed the efficacy of the diatomaceous earth filters. Further studies by Hendricks[2] and DeWalle[3] with Giardia lamblia cysts also showed comparable reduction efficiencies for diatomaceous earth filters.

1.S.A. Schaub; F.A. Bell, Jr.; P. Berger; C. Gerba; J. Hoff; P. Regunathan; and R. Tobin. [Includes additional revision pursuant to Scientific Advisory Panel review (Federal Insecticide, Fungicide, and Rodenticide Act).]

Subsequently confirmatory parallel testing results have been developed vis-a-vis 4-6 micron particles as compared to Giardia lamblia cysts. Specifically, two units listed by NSF for cyst reduction (using 4-6 micron particles)[4] have also been tested and listed for 100% efficiency reduction (using Giardia lamblia cysts) by Hibler[5]:

1. Everpure Model QC4-SC
2. Royal Boulton Model F303.

Again we prefer the use of the human pathogen, Giardia lamblia; however, no experimental data has been provided regarding the lack of validity or of failure in previous tests utilizing beads or particles of 4-6 microns. In most cases the bacterial or viral challenges to occlusion filters ill represent a greater problem in terms of microbiological reduction requirements than will cysts. Therefore, without substantiation of deficiencies, the use of 4-6 micron beads or particles is considered to be as feasible as the use of live cysts for routine performance testing of water filtration (occlusion) devices.

Recommendation:

Recommend retaining the optional use of 4-6 micron particles or beads for cyst reduction testing in occlusion filtration devices only.

References:

(1) Logsdon, G. S., et al. Alternative Filtration Methods for Removal of Giardia Cysts and Cyst Models, JAWWA, 73(2)111-118, 1981.

(2) Logsdon, G. S.; Hendricks, D. W., et al. Control of Giardia Cysts by Filtration: The Laboratory's Rose. Presented at the AWWA Water Quality Technology Conference, December, 1983.

(3) DeWalle, et al. Removal of Giardia lamblia Cysts by Drinking Water Treatment Plants, Grant No. R806127, Report to Drinking Water Research Division, U.S. EPA (ORD/MERL), Cincinnati, Ohio.

(4) National Sanitation Foundation, Listing of Drinking Water Treatment Units, Standard 53. May, 1986.

(5) Hibler, C. P. An Evaluation of Filters in the Removal of Giardia lamblia. Water Technology, pp. 34-36. July, 1984.

C. Alternate assay techniques for cyst tests (Jensen): Proposed alterations in cyst tests include a different method for separating cysts from fecal material and an assay method involving the counting of trophozoites as well as intact cysts. Both alterations have been used by Bingham, et al. (Exp. Parasitol., 47:284-291, 1979).

Recommendation:

These alterations appear to be reasonable laboratory procedures, supported by a peer-reviewed article and will be included in the Report as options for possible development and use by interested laboratories.

D. The use of pour plate techniques as an option for Klebsiella terrigena bacteria analyses.

Recommendation:

The pour plate technique adds a heat stress factor to the bacteria which constitutes a possible deficiency. However, it is a recognized standard method and probably will not adversely affect the Klebsiella terrigena. Consequently, it will be added to the Report as one of the acceptable techniques.

E. Option of using Escherichia coli in lieu of Klebsiella terrigena for the bacterial tests.

Discussion:

Appendix N-1, Section A.1. of the Guide Standard and Protocol sets forth the basis for selection of K. terrigena as the test bacteria. The selection was made along pragmatic line emphasizing the occurrence of K. terrigena in surface waters and that it would represent the enteric bacteria. It was also pointed out that the tests with virus and Giardia were expected to be more severe than the bacterial tests. For comprehensiveness, bacterial tests were included in the protocol but were not felt to be as crucial as the virus and Giardia tests.

E. coli, or any number of other generally accepted indicator bacteria, could be used for the test program if they were shown to have good testing and survival characteristics (equivalent to K. terrigena) by the interested research laboratory.

Recommendation:

The intent of the Guide Standard and Protocol is to provide a baseline program subject to modification when properly supported by an interested laboratory. Consequently, any laboratory could propose and with proper support (demonstrating challenge and test equivalency to K. terrigena) use Escherichia coli or one of the other enteric bacteria. This idea will be included in revised working in Section 1.2.2, "General Guide."

F. Performance requirements for Giardia cysts and virus in relation to the EPA-Recommended Maximum Contamination Levels (RMCLs) of zero.

Discussion:

The RMCLs of zero for Giardia and viruses which have been proposed by EPA are health goals. They are no enforceable standards since to assure the presence of "no organisms" would require an infinite sample. The

rationale for the recommended performance requirements for Giardia cysts and virus is set forth in Sections A.2 and A.3 of Appendix A. We feel that these requirements together with the application of realistic worst case test conditions will provide a conservative test for units resulting in treated effluent water equivalent to that of a public water supply meeting the microbiological requirements and intent of the National Primary Drinking Water Regulations.

Recommendation:

Retain recommended performance (log reduction) requirements for cyst and virus reduction.

G. Rotavirus and its proposed assay: One commenter states that the rotavirus tests are impractical because Amirtharajah (J. AWWA, 78(3):34-49, 1976) cites "no satisfactory culture procedures available for analysis of these pathogens and, therefore, monitoring would not be feasible."

Discussion:

Section 3.4.1.2, "Virus Tests" of the Report, presents means for culturing and assaying rotaviruses. This means for doing the rotavirus tests are available and are practical for application in the laboratory. Dr. Amirtharajah was referring to the field collection, identification in the presence of a wide variety of microorganisms, and quantification as not being "satisfactory." Laboratory analysis of rotaviruses is practical but their field monitoring may not yet be feasible.

Further, the selection of both poliovirus and rotavirus as test viruses was necessitated by the fact that the surface adsorptive properties and disinfection resistance of the various enteric viruses have been shown to differ significantly by virus group and by strains of a specific virus. While all enteric viruses and their strains could not be economically tested, it was determined by the task force that at least two distinctly different virus types should be tested to achieve some idea of the diversity of removal by the various types of water purifiers. Polio and rota viruses have distinctly different physical and chemical characteristics representative of the viruses of concern. Polioviruses are small single stranded RNA viruses with generally good adsorptive properties to surfaces and filter media while rotaviruses are over twice as large, are double stranded RNA and in some studies have been found to possess less potential for adsorption onto surfaces or filter media. These two viruses also have been demonstrated to have somewhat different disinfection kinetics.

Recommendation:

Retain the rotavirus test requirements.

H. Definition of microbiological water purifier: One general comment requested redefinition based on "lack of any virus removal "requirement

in the EPA primary drinking water regulations, so that no virus reduction requirement should be included. Also, it was claimed that the separation of purifiers from non-purifiers would be a "disservice to consumers and other users."

Discussion:

Viruses are recognized in the EPA regulations vis-a-vis a proposed recommended maximum contaminant level of zero. Since virus monitoring for compliance with a possible MCL is not yet feasible, a treatment requirement is necessary. Virus control will be considered in the Safe Drinking Water Act filtration and disinfection treatment regulations. The reduction of viruses by treatment is discussed by Amirtharajah (J. AWWA, 78:3:34-49, 1986).

With respect to consumers and other users, we feel that the current definition is appropriate and necessary. The average consumer cannot be expected to know the difference between viruses, bacteria and cysts, or when a raw water will or will not contain any of these organisms. In order to protect the average consumer, the subject units either alone or with supplementary treatment, should be able to cope with all of the specified organisms.

Recommendation:

Retain the current definition for microbiological water purifier.

I. Coverage of units: Several comments related to the coverage of units. These questions are addressed individually as follows:

1. Ultraviolet units that are used for supplemental treatment of water from public water system taps would not be covered. We agree that such units are not covered and parenthetical language has been included in Section 1.3.2.3 to clarify this point.

2. A special status should be given to units which remove Giardia and bacteria but not virus. Specifically, the meaning of Section 1.2.4, "Exceptions," was addressed. The "Exceptions" section was specifically developed to relate to the problem of public water systems having disinfection but no filtration on a surface supply. Cysts alone have been found to survive disinfection treatment and could be present in such treated waters. In this case an effective cyst filter serves an independent, beneficial purpose and should not be required to be a microbiological water purifier. However, such a unit should not be used as sole treatment for untreated raw water. Additional parenthetical language has been added to Section 1.2.4.

3. The entire treatment unit or system should be tested, not just a single component. We agree but believe that it is sufficiently clear without providing additional language.

4. The protocol should be expanded to cover units for the reduction of TCE, EDB and other chemical pollutants. We felt that the introduction of non-microbiological claims to the standard would make it large, unwieldy and duplicative of an existing third-party standards and testing program (see Section 1.2.5).

J. Alleged preference of National Sanitation Foundation (NSF) over other laboratories for conducting the microbiological water purifier testing protocol. The comment indicated that we were giving NSF preferential treatment "to the detriment of other laboratories well qualified to perform the required protocol."

Discussion:

We have made appropriate references to existing standards (#42 and #53) developed by the NSF standards development process. Standard 53, the health effects standard, was developed by a broadly based Drinking Water Treatment Units Committee, including representatives from local, State and Federal health and environmental agencies, universities, professional and technical associations, as well as water quality industry representatives. It was adopted in 1982 and the only test from it utilized in our Report has been substantiated as described in Part B of this "Response."

Nowhere in our report have we advocated NSF (or any other laboratory) as the prime or only laboratory for implementing "the required protocol."

Recommendation:

No action needed.

K. Instruction concerning effective lifetime. One comment described an alternate means for determining lifetime where a ceramic unit is "brushed" to renew its utility and is gradually reduced in diameter. A gauge is provided to measure diameter and to determine when replacement is needed.

Recommendation:

Where a manufacturer provides a satisfactory "other" means of determining lifetime, this should be accepted. Appropriate words have been added to Section 2.4.1.C.

L. Ceramic candles should not be cleaned during testing because some consumers would not clean them and this would provide the "worst case test." One comment asserted this point.

Discussion:

There is some truth to this proposition. However, the other approach may also have validity. Frequent brushing may reduce filtration efficiency.

In any event, where a manufacturer prescribes filter cleaning and how to do it, and provides a gauge to determine lifetime, we feel the testing program is bound to follow the manufacturer's directions.

Recommendation:

No change needed.

M. Scaling up or down. One comment points out that one or more manufacturers may vary size of treatment units by increasing or decreasing the number of operative units rather than the size of the operative unit. The comment suggests allowing scaling based on size of operative unit.

Recommendation:

We agree with the comment and have added clarifying words to Section 3.5.3.3.

N. Turbidity level of "not less that 30 NTU" for ceramic candles or units. One comment states that "Such levels are impossible to utilize in testing mechanical filtration devices which will clog entirely or require such frequent brushing as to render the test impossible as a practical matter."

Discussion:

We recognized the potential "clogging problems" in Section 3.5.1.a(2) where the 30 NTU water is only to be applied immediately before and during each sampling event; the non-sampling turbidity level, which will be applied over 90% of the "on" time, is currently set at no less than 10 NTU.

Turbidity levels of 30 NTU are commonly found in surface waters during heavy rainfall or snow melt. Treatment units may be used under these circumstances, so this challenge level should be retained. However, most usage will occur under background conditions so the non-sampling turbidity levels should be 0.1-5 NTU.

Recommendations:

1. Retain sampling turbidity level of not less than 30 NTU, and

2. Change non-sampling turbidity to 0.1-5 NTU. Appropriate wording changes have been introduced in Section 3.5.1.a(2) and in Appendix N-1, Section B.

O. Chlorine in test water #5. One comment asserts that chlorine "tends to increase silver ion leaching activity" and that a high chlorine level should be included in the silver leaching test; but no reference or evidence, however, is provided to back this assertion.

Discussion:

We have no compelling evidence or reason to expect that chlorine will enhance the leaching of silver. However, the prescribed low pH and TDS levels will provide a clearly severe test for silver leaching.

Recommendation:

No change needed.

P. Unnecessary difficulty and expense of test protocols. Several comments were made under this general heading. These comments are outlined and discussed as follows:

1. Too many sampling events are required; sampling of a few units at start, middle and finish should be satisfactory: The committee has carefully laid out the standard and protocol and we feel the minimum sampling plan must be maintained for the consumers' health protection.

2. Three units are too many to study; parallel testing of two units should be satisfactory: For consumer protection, the Disinfectants Branch, Office of Pesticide Programs, has traditionally required the testing of three units. The committee recognizes the additional cost involved in testing a third unit but feels that this will provide a minimum level of assurance to prevent infectious disease and recommends retention of the 3-unit requirement.

3. The protocol requires large tanks and microbiological reseeding on a daily basis: We feel that the tank size requirements are not extreme and can be met by an interested laboratory. With respect to reseeding, it should be pointed out that virus and cyst seeding need only be conducted immediately before and during the sampling "on" period (see Section 3.5.1.b(2)), equivalent to less that 10% of the "on" time. This "spot" seeding for viruses and cysts recognized the expense and difficulty of maintaining large populations of these organisms. Continuous seeding was provided for bacteria because they are easier to grow and maintain and might have the capacity to grow through some units, given enough time and opportunity.

4. Challenge levels of contaminants are too high compared to known environmental conditions and the required log reductions exceed Safe Drinking Water Act requirements: As explained in a footnote to Table 1, Section 2, the influent challenges may constitute greater concentrations than would be anticipated in source waters. These levels are necessary to test properly for the required log reductions without having to utilize sample concentration procedures which are time/labor intensive and which may, on their own, introduce quantitative errors to the microbiological assays. As mentioned in Part I of this paper, the log reductions for bacteria, virus and Giardia have been suggested for public water system

treatment in a paper by Amirtharajah (1986, JAWWA, 78:3:34-49). The reductions in the microbiological purifier standard are entirely compatible with the reductions cited for public water supply treatment.

APPENDIX O

GUIDELINES TO EVALUATE OZONE DISINFECTION

Principal Technical Author: Dr. Ovadia Lev
Division of Environmental Sciences
Hebrew University of Jerusalem
Jerusalem, Israel

APPENDIX O

GUIDELINES TO EVALUATE OZONE DISINFECTION

TABLE OF CONTENTS

		Page
O.1	INTRODUCTION	O.1-1
	O.1.1 Background	O.1.1
	O.1.2 Objectives of the Recommended Guidelines	O.1-2
	O.1.3 EPA's Approach in Setting the Recommended Guidelines	O.1-3
	O.1.4 Typical Ozone Disinfection Units	O.1-4
O.2	DETERMINATION OF CONTACT TIME (T)	O.2-1
	O.2.1 Background	O.2-1
	O.2.2 T_{10} Analysis	O.2-1
	O.2.3 Additional Considerations for T_{10}: Multiple Chamber Contactors	O.2-3
	O.2.4 Alternative Analysis of Disinfection Kinetics	O.2-7
	O.2.5 Continuously Stirred Tank Reactor (CSTR) Approach	O.2-9
	O.2.6 Segregated Flow Analysis (SFA)	O.2-10
	O.2.7 Relative Inactivation of Giardia Cysts and Viruses	O.2-12
	O.2.8 Examples of Determining Contact Time (T)	O.2-13
	O.2.8.1 Evaluation Using T_{10}	O.2-13
	O.2.8.2 Evaluations Using CSTR Calculations	O.2-16
	O.2.8.3 Evaluations Using SFA	O.2-18
	O.2.9 Estimating T	O.2-21
O.3	DETERMINATION OF OZONE CONCENTRATION (C)	O.3-1
	O.3.1 Introduction	O.3-1
	O.3.2 Direct Measurement of C	O.3-2
	O.3.3 Estimating C Based on Residual Measurements at the Outlet	O.3-6
	O.3.3.1 First Chambers	O.3-6
	O.3.3.2 Subsequent Chambers	O.3-7
	O.3.4 Estimating C	O.3.-10
O.4	SITE SPECIFIC EVALUATION OF OZONE CONTACTORS	O.4-1
	O.4.1 Introduction	O.4-1
	O.4.2 Site Specific Correlations of C with an Observable Variable	O.4-2
	O.4.2.1 Utilizing Off-Gas Measurements	O.4-4
	O.4.3 Modeling the Performance of Full Scale Operations	O.4-7
	O.4.4 Microbial Indicator Studies to Model Inactivation Contactors	O.4-9
	REFERENCES	

TABLE OF CONTENTS (Continued)

LIST OF FIGURES

Figure No.	Title	Following Page
0-1	Turbine Contactor, Haworth Water Treatment Plant Hackensack, NJ	0.1-5
0-2	Multiple-Chamber Ozone System, Los Angeles Aqueduct Filtration Plant	0.1-5
0-3	Multiple-Chamber Ozone System, City of Tucson, Arizona	0.1-5
0-4	Multiple-Chamber Ozone System. East Bay Municipal Utility District, Oakland, California	0.1-5
0-5	Schematic of Deep U-Tube Ozone Contactor	0.1-6
0-6	Schematic of In-Line Static Mixer	0.1-6
0-7	Principal of Segregated Flow Analysis	0.2-11
0-8	Segregated Flow Analysis of an Ozone Contactor Tracer Study	0.2-14
0-9	Tracer Study of Sturgeon Bay Ozone Contactor	0.2-15
0-10	Segregated Flow Analysis of Ozone Contactor - Integration of Survival Efficiency.	0.2-20
0-11	Segregated Flow Analysis of Ozone Contact Chamber	0.2-20
0-12	Decision Tree for Estimating T	0.2-21
0-13	Flow Configurations in Ozone Contact Chambers.	0.3-1
0-14	Direct Measurements for Determining T	0.3-5
0-15	Ozone Concentration Profiles	0.3-8
0-16	Decision Tree for Estimating T	0.3-10
0-17	Example of Empirical Correlation of Residual Ozone and Off-Gas	0.4-6

TABLE OF CONTENTS (Continued)

LIST OF TABLES

Table No.	Title	Following Page
0-1	Recommended Procedures to Calculate Contact Time (T)	0.2-2
0-2	CT Values for Inactivation by Ozone	0.2-7
0-3	k Values for Inactivation by Ozone	0.2-7
0-4	Spread Sheet Notations for SFA	0.2-18
0-5	Segregated Flow Analysis of an Ozone Disinfection Contactor at Hackensack	0.2-20
0-6	Correlations to Predict C Based on Outlet Ozone Concentrations	0.3-6
0-7	Henry's Constants for Ozone	0.4-5
0-8	Empirical Correlation Between C_{out} and y_{out}	0.4-6

0.1 INTRODUCTION

0.1.1 Background

The Surface Water Treatment Rule (SWTR) specifies overall minimal removal/inactivation efficiencies by filtration and disinfection for Giardia cysts and viruses. The SWTR uses the "CT" concept to predict inactivation efficiencies of microorganisms by disinfection. "CT" represents the product of contact or exposure time ("T") and the concentration of disinfectant ("C") during disinfection. The Guidance Manual suggests design, operating and performance criteria for specific surface water quality conditions to provide compliance with the SWTR. Appendix C of the Guidance Manual recommended guidelines for the determination of contact time (T_{10}) for the disinfection of drinking water. T_{10} is the time defined to assure that 90 percent of the water that enters the disinfection chamber will remain for at least T_{10} minutes. This appendix recommends additional procedures which may be used for consistent determination of the C and T for systems using disinfection by ozone.

Ozone has unique characteristics and warrants special consideration for estimating inactivation efficiencies. In developing these recommended procedures, EPA addressed the following complications that are specific to ozone disinfection and distinguish it from other typical disinfection processes.

- Despite the long operational experience with ozone disinfection, the data regarding performance of ozone as a disinfectant are rather limited. Most of the available inactivation rate data are derived from laboratory conditions which are substantially different than full scale continuous operation, generally more so than for other disinfectants.

- From a technical point of view, disinfection of drinking water by ozone is more complicated than disinfection by other common disinfectants because of ozone's unique gas-liquid mass transfer characteristics. Ozone requires sophisticated mass transfer equipment to introduce it into water, because of the relatively low ozone concentration in the feed gas. Ozone is a powerful oxidant, that reacts rapidly with organic and inorganic substances present in the water and undergoes auto-decomposition. Therefore, it's residual is much less stable than that of other disinfectants and dissipates rapidly.

- Ozone contactors exhibit more diversified types of flow configurations relative to the flow pattern in contactors for the other disinfectants. The flow configuration often ranges from an almost continuously stirred tank reactor (CSTR) to an almost ideal plug flow configuration, making the determination of contact time for ozonation more complex than for other disinfectants.

- Ozone contactors are closed vessels because of ozone's toxicity. The contactors have limited access for measurement of the ozone concentration profile within the contactor. Gas bubbles also may interfere with the determination of the dissolved ozone concentration, if the bubbles are entrapped during sampling.

- Ozone technology is still evolving and new types of ozone contactors are being developed. These guidelines should not set unnecessary obstacles that will inhibit engineering progress and prevent innovative designs of disinfection systems.

EPA's procedures for determining C and T for disinfection with ozone differ from those recommended for systems using chlorine, chloramines or chlorine dioxide as disinfectants. The CT evaluation procedures presented in previous chapters of the Guidance Manual are not appropriate for ozone disinfection because they would result in excessive ozone dosages. Excessive ozone doses result in high energy requirements and costs and may lead to unnecessary production of ozonation by-products which may have associated health risks. Additionally, excess dissolved or entrained ozone should be destroyed or removed before reaching the first drinking water consumer or plant personnel, in order to prevent health risks. Therefore, excessive dosage of ozone may require an additional unit operation to destroy the remaining residual ozone. This process is expensive and may not be necessary if guidelines such as those presented in this section are used for compliance with the SWTR.

0.1.2 Objectives of the Recommended Guidelines

The recommended guidelines were developed to assure compliance with the SWTR for the whole range of flow rates, flow configurations and water quality conditions that may be encountered with ozone disinfection of drinking water. The primary goal of these guidelines is to assure

compliance with the SWTR even under "worst case" conditions. Without compromising this primary goal, these guidelines were developed to meet the following criteria:

1. Simplicity: The guidelines for selecting contact time (T) and concentration (C) have to be easily understood by practitioners, even by those who do not have an engineering background.

2. Implementation: The procedure to estimate concentration and time should be easily implemented, even by water utilities that have only limited engineering and technological means.

3. Economics: The guidelines should be designed to minimize capital and operating costs and to minimize ozone consumption. The guidelines should be flexible enough to allow systems to take advantage of site specific characteristics of the treated water and the various designs of ozone contactors.

0.1.3 EPA's Approach in Setting the Recommended Guidelines

EPA is aware that the current technological knowledge is insufficient to formulate a consistent and efficient single set of general rules that will achieve these conflicting goals and still guarantee compliance with the SWTR. Therefore, EPA developed two alternative sets of guidelines that systems may use depending on their technological resources:

- Alternative 1: General guidelines which assure compliance with the SWTR regardless of the site specific conditions,

- Alternative 2: A sophisticated evaluation procedure that water utilities may use to take advantage of their site specific conditions.

These guidelines are considered to be state-of-the-art. As more information becomes available, more accurate approaches and models may be developed. A brief description of the current alternatives follows.

Alternative 1 - General Guidelines

This alternative consists of a simple set of general guidelines that assure compliance with the SWTR even under worst case conditions. These guidelines were developed to emphasize generality and simplicity. However, they may not result in the lowest cost alternative(s).

The second and third sections of this Appendix contain detailed descriptions of the general guidelines. Section 0.2 contains procedures to estimate the contact time (T) and Section 0.3 contains procedures to calculate the concentration (C) in ozone contactors based on simple measurements of some parameters. The basis for these general guidelines is discussed in two papers (Lev and Regli, 1990a,b).

Alternative 2 - Site Specific Evaluation Procedures

This alternative consists of a more sophisticated set of evaluation procedures to characterize the performance of ozone contactors and thereby take advantage of site specific conditions. EPA recommends that systems be given opportunity to prove by further experimental and analytical data that the performance of their ozone contactors are better than the performance predicted by the first alternative, thereby allowing a system to minimize costs while providing adequate treatment.

Section 0.4 outlines recommended procedures for demonstrating that ozone contactors achieve better performance than that predicted by the first alternative.

0.1.4 Typical Ozone Disinfection Units

Several types of ozone contactors are currently in use for disinfection of drinking water in the United States. Other types of contactors are being designed or are being used for disinfection of treated sewage effluents. The following characteristics illustrate the diversity of ozone contactors:

- The capacity of ozonation systems ranges from less than 1 million gallons per day (mgd) up to 600 mgd.
- The volume of ozone contactors ranges from less than 35 cubic feet up to more than 35,000 cubic feet for a single chambers.
- The ozone gas stream may be introduced into the water by several ways including porous diffusers, submerged turbines and gas injectors.
- Ozone contactors include single or multiple gas/liquid contact chambers.

Four typical ozone contactors currently in use or in design in the United States are shown on Figures O-1 through O-4. Figure O-1 presents a schematic of an aspirating turbine contactor, operating in countercurrent flow. A turbine agitator is used to introduce the ozone into the contactor and to mix the liquid phase. This unit may serve as the first ozone chamber in a series of chambers or as a single chamber. The unit shown in this figure is from the Hackensack Water Company's Haworth Plant at Haworth, New Jersey. The turbine chamber is followed by a reactive chamber to provide additional contact time. Studies conducted in the full scale turbine agitated contactor demonstrated that even when the ozone demand was high, the dissolved ozone concentration was almost constant throughout the contactor as a result of the vigorous action of the turbine (Schwartz et al, 1990).

The 600 mgd ozone system of the city of Los Angeles is comprised of four parallel contactors each consisting of six chambers. A schematic of one of these contactors is presented on Figure O-2. (Stolarik and Christie, 1990) As indicated on this figure:

- An oxygen stream containing a few percent by weight of ozone is compressed through bubble diffusers into the first and third chambers of the contactor.
- The second and fourth chambers are used to provide contact time, without supplying additional gas to the liquid stream.
- The size of the first three gas/liquid contact chambers is 20,400 cubic feet each.
- The fifth and sixth chambers are the ozonated water channel and the rapid mixer basins.
- The liquid and gas streams in the first and third chambers flow in a counter-current pattern; the gas stream flows upward and the water stream flows downward.

As illustrated on Figure O-3, a similar design approach was taken by the City of Tucson, Arizona. This contactor is comprised of five chambers, all of which are equipped with gas diffusers. The sixth chamber has no diffusers. The flow in all six chambers is counter-current flow. These counter-current chambers are separated by narrower co-current liquid channels in which the water flows upward to the inlet of the next chamber.

The East Bay Municipal Utility District Oakland, California is currently designing two 60 mgd ozone contactors, the first of which is to be operational in 1991. As illustrated on Figure O-4, the contactor includes three ozone gas/liquid chambers followed by three more reactive chambers to provide additional contact time. The first and third chambers are counter-current and the second chamber is co-current. In the latter, the water and the gas bubbles flow in the same direction.. Hydrogen peroxide can be added at the outlet of the contactor to dissipate any residual dissolved ozone.

The following types of contactors are already used in other parts of the world, but have not yet been installed in the United States:

- The Deep U Tube contactor shown on Figure O-5, is comprised of two concentric flow tubes. Water and gas streams are introduced at the top of the inner tube and the mixture is pumped 10 to 30 meters downwards at a velocity greater than the rise rate of the gas. After reaching the very bottom of the contactor the mixture flows up in the outer section of the contactor. The Deep U-tube is basically a co-current operation taking advantage of the increased mass transfer at high pressures.

- The Static Mixer (shown on Figure O-6) consists of a flow tube equipped with baffles to produce efficient contact between the liquid and the gas streams. This installation is gaining popularity in Europe particularly for small and medium size disinfection units. Here the flow is basically co-current, the liquid and gas flow is in the same direction, through a tube equipped with baffles that create turbulence and thus increases the rate of gas-liquid mass transfer. The ozone is applied to the water prior to the mixer either through an eductor or a diffuser. Following dissolution through the mixer, the water flows through a pipeline in plug flow.

- Some contactors, particularly for disinfection of wastewater effluents, use packed beds to increase mass transfer. Co-current or counter-current flow configuration may be used.

The guidelines were developed to represent four different flow conditions in ozone contactors. However, other types of contactors or flow conditions may still use the same guidelines if the features of the gas-liquid flow configuration as presented in Section 0.4 of this appendix are taken into account.

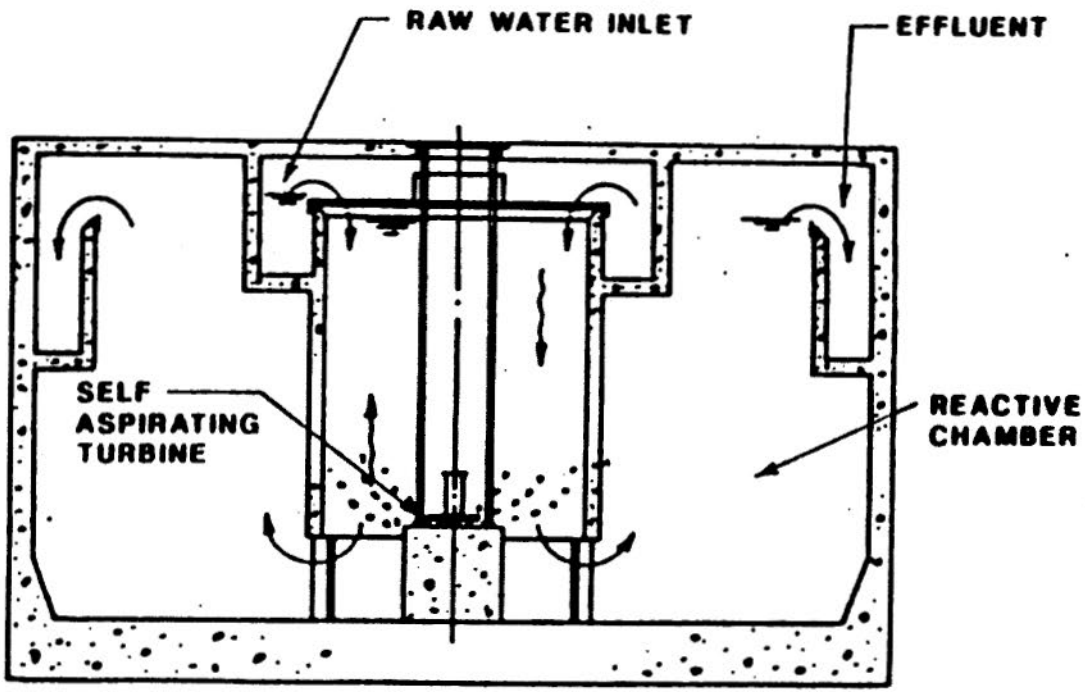

FIGURE 0-1 - TURBINE OZONE CONTACTOR,
HAWORTH WATER TREATMENT PLANT
HACKENSACK, NJ

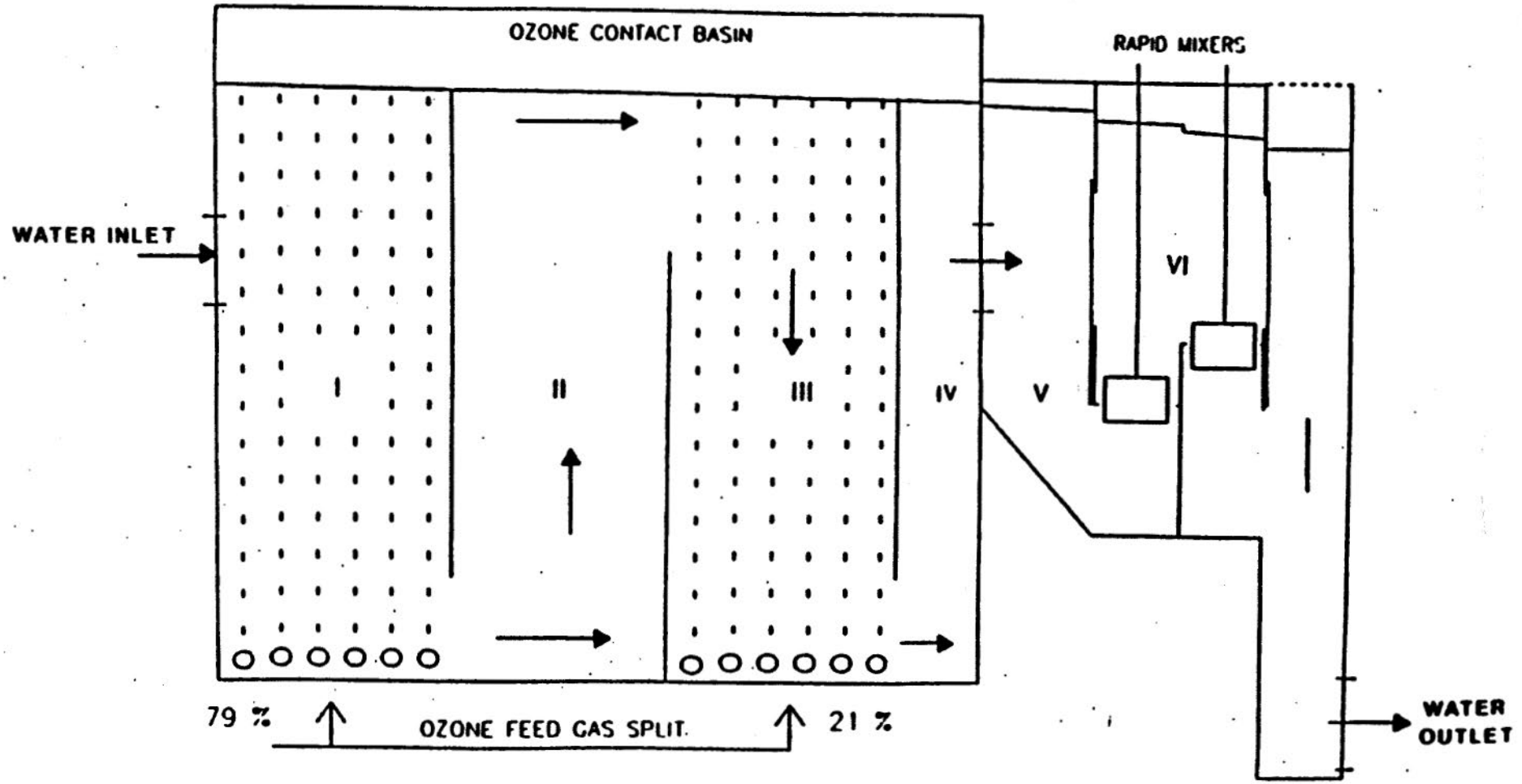

FIGURE 0-2 - MULTIPLE-CHAMBER OZONE SYSTEM, LOS-ANGELES AQUEDUCT FILTRATION PLANT, STOLARIK et al. (1988)

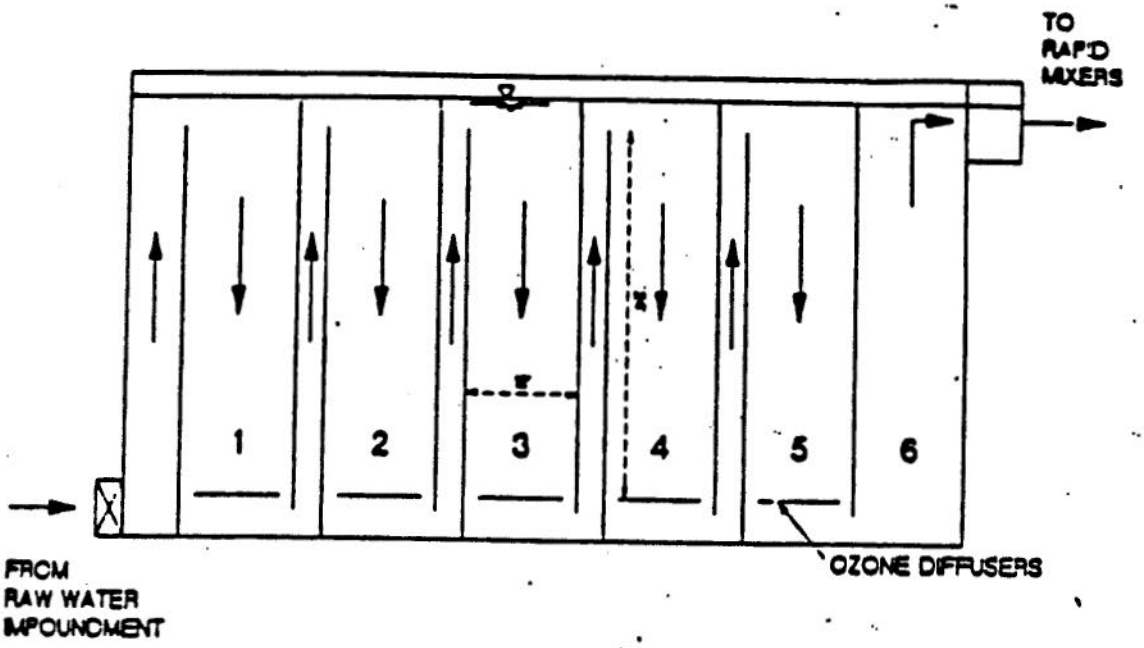

FIGURE 0-3 - MULTIPLE-CHAMBER OZONE SYSTEM, CITY OF TUCSON, ARIZONA, JOOST et al. (1989)

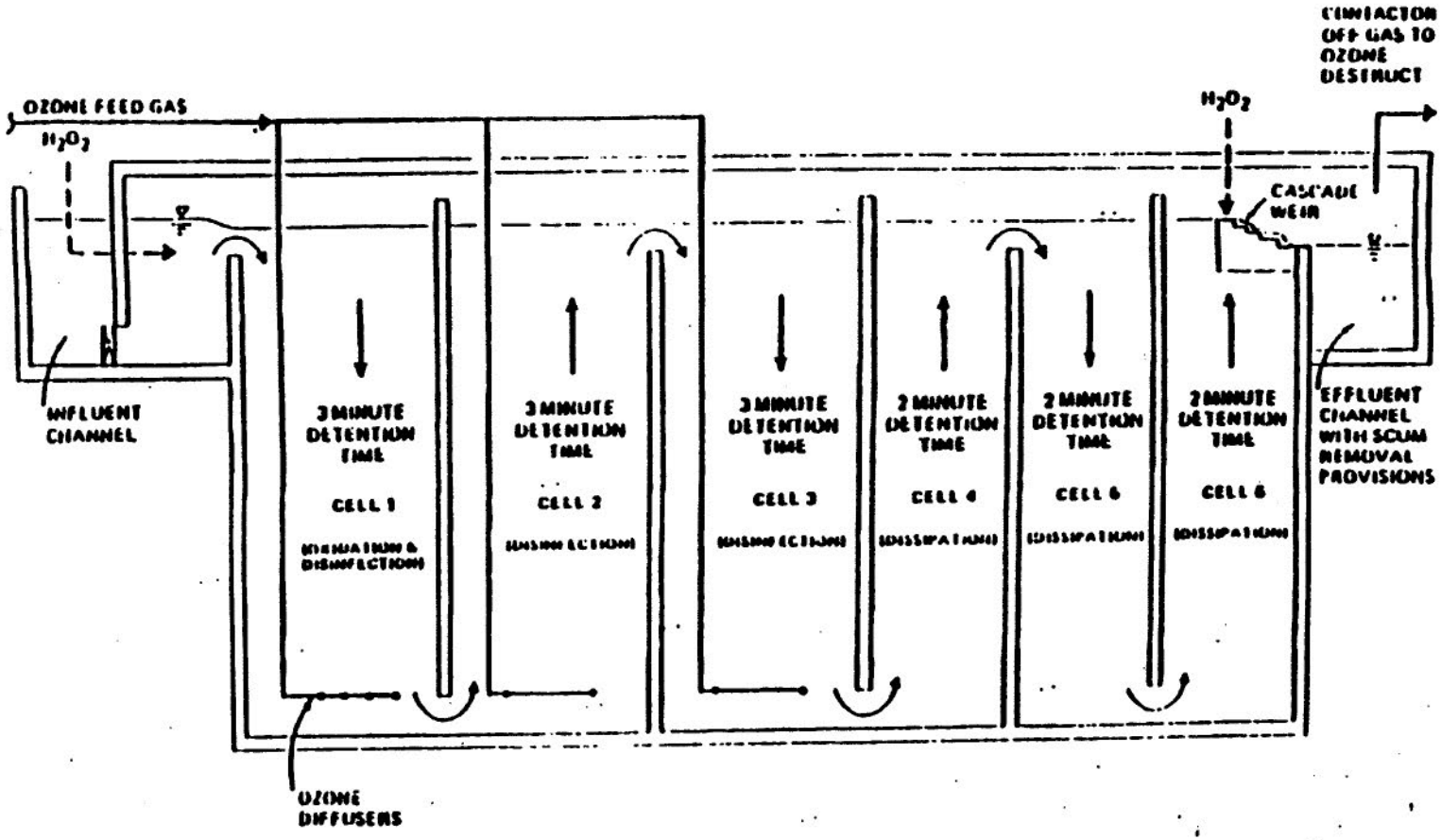

FIGURE 0-4 - MULTIPLE-CHAMBER OZONE SYSTEM, EAST BAY MUNICIPAL UTILITY DISTRICT, OAKLAND, CALIFORNIA, CARNS (1990)

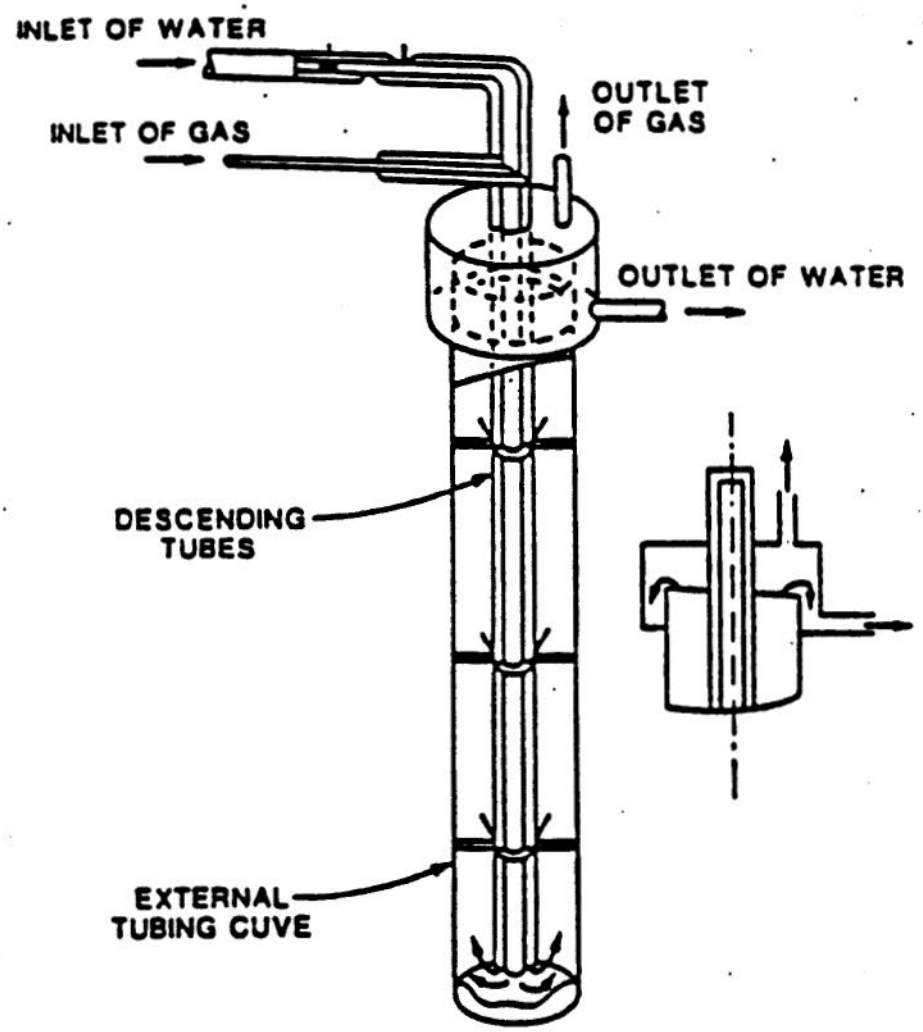

FIGURE 0-5 - SCHEMATIC OF THE DEEP U-TUBE OZONE CONTACTOR, ROUSTAN et al. (1987)

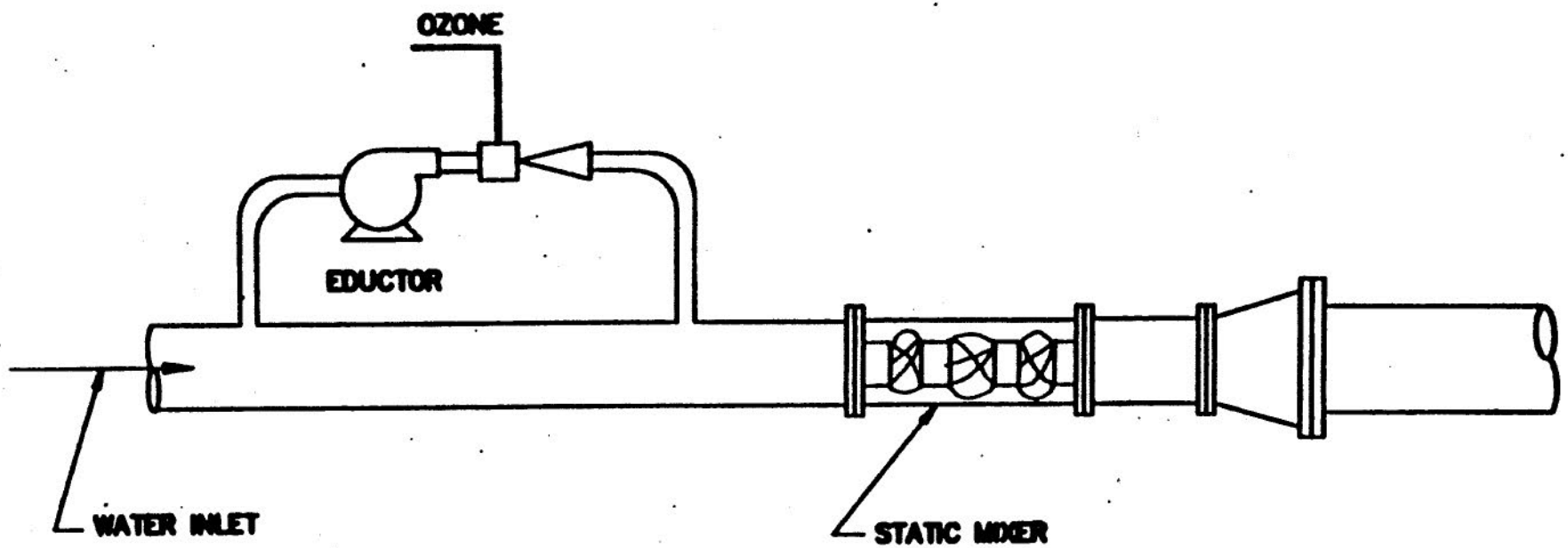

FIGURE 0-6 - SCHEMATIC OF IN-LINE STATIC MIXER

0.2 DETERMINATION OF CONTACT TIME (T)

0.2.1 Background

The hydraulic characteristics in ozone contactors range from an almost Continuous Stirred-Tank Reactor (CSTR) to an ideal plug flow configuration. Because the T_{10} approach may not be adequate for determining the inactivation provided for systems resembling a CSTR, and because the T_{10} approach is overly conservative in other cases, EPA recommends the following three numerical methods to predict the contact time (T) in ozone contactors:

T_{10}: The T_{10} method discussed in Appendix C (and in Section 0.2.2) is a good measure to characterize the contact time in most cases. However, this method reduces the possibility of complying with the SWTR for systems that have relatively high back-mixing and require high inactivation levels.

Segregated Flow Analysis (SFA): (See Section 0.2.6) This is an alternative procedure to calculate the disinfection contact time. This procedure is applicable only to systems that have good data from tracer studies of high resolution as explained in Section 0.2.6.

CSTR: The Continuously Stirred-Tank Reactor (CSTR) method described in Section 0.2.5, assumes the ozone contactor behaves as a CSTR. This procedure is extremely conservative. However, no apparent simplified analysis is currently available to make it less conservative. The CSTR approach should be used only when:

- Other predicting techniques are not recommended,
- The required inactivation level is very low, or
- Systems cannot afford to get good tracer study data for other methods.

Systems may choose the optimal method for their situation based on the available data to perform the calculations. A discussion of each is presented below.

0.2.2 I_{10} Analysis

The simplest method of calculating the contact time, T, of microorganisms in a contactor is by the T_{10} approach. T_{10} is defined as the detention time to assure that 90 percent of the liquid that enters the

contactor will remain at least T_{10} minutes in the contactor. A system achieving a CT_{10} corresponding to X percent inactivation, will assure that 90 percent of the water passing through the contactor is receiving at least X percent inactivation, while 10 percent of the water will receive less than X percent inactivation.

When conducting a step-input tracer study, T_{10} is the time interval required for the outlet tracer concentration to achieve 10 percent of its ultimate response, following an inlet step addition. Appendix C of this manual contains procedures to conduct and evaluate tracer studies for the determination of T_{10}. Appendix C also contains procedures to estimate the T_{10} of contactors based on their baffling conditions and flow configuration.

The results of tracer studies conducted on several ozone contactors (Stolarik and Christie, 1990, Schwartz et al, 1990, Rosenbeck et al, 1989) indicate that high quality tracer data on ozone contactors can be obtained and that T_{10} can be estimated with high precision, but to a lesser degree when T_{10} is less than one minute.

T_{10} is a good measure of the contact time in most contactors and the safety margin provided by using T_{10} compensates for the inferior performance of contactors with a high degree of short-circuiting and backmixing relative to contactors that approach plug flow conditions. (see Lev and Regli, 1990a, for further detail.) However, for contactors with a high degree of short-circuiting and a need to provide a high level of inactivation, this safety margin fails to compensate for the effect of backmixing. In such cases, approximately 10 percent of the water passing through the contactor receives significantly less than the inactivation indicated by CT_{10}. In these cases, either the SFA or the CSTR approach should be used for determining the contact time.

The recommended alternatives for determining the contact time (T) for various conditions of T_{10} versus hydraulic detention time (HDT) are presented in Table O-1. HDT is determined by dividing the liquid volume of the contactor by the rate of flow through the contactor. As illustrated in this table:

TABLE O-1

Recomended Procedures to Calculate the Disinfection Contact Time (T)

Condition:	$T_{10}<(HDT)/3$ & $-Log(I/I_0)^{(1)} < 2.5$	$T_{10}<(HDT)/3$ & $-Log(I/I_0)^{(1)} >= 2.5$	$T_{10}>(HDT)/3$
Recommended Methods:	$T=T_{10}$		$T=T_{10}$
	SFA[2]	SFA[2]	SFA[2]
	CSTR[3]	CSTR[3]	CSTR[3]

Notes:

1. Required level of inactivation in logs of either Giardia lamblia cysts or viruses whichever value is greater;
   I = # live organisms in outlet of ozone contactor and
   I_0 = # live organisms in inlet to ozone contactor

2. High resolution tracer characterization of the ozone contactor must be available.

3. The CSTR method is extremely conservative and should be avoided when alternative approaches are possible.

- The T_{10} method is applicable for systems that are required to achieve less than a 2.5-log inactivation of Giardia cysts even if the flow configuration in their ozone contactor approaches that of a CSTR, such as disinfection in contactors using turbine agitators.

- Likewise, the T_{10} approach is appropriate for systems demonstrating T_{10}/HDT greater than 1/3 regardless of the required level of disinfection.

- Systems for which the T_{10} approach is appropriate to have the option of applying either the SFA or CSTR analysis. The method resulting in the highest T value, or thereby the lowest C value may then be followed.

The SFA or CSTR should be used in lieu of T_{10} when the:

- Level of inactivation required for Giardia cysts and/or viruses is 2.5-log or higher

- T_{10}/HDT is less than 1/3.

Systems should be aware that the 2.5-log inactivation guideline refers to the inactivation provided by the ozone system alone regardless of inactivation provided by other disinfectants. For example, if a system requires an overall inactivation of 3-log and provides 1-log inactivation by chlorine, then a 2-log inactivation is required by ozone and the T_{10} approach can be used.

Examples for applying the different methods of calculation for T are included in Section 0.2.8.

0.2.3 Additional Considerations for T_{10}: Multiple Chamber Contactors

This section provides guidelines for computing T_{10} for several contactors in series. The main shortcoming of the T_{10} approach is the inherent non-linearity of this measure. In contrast to the HDT, which is a linear measure, T_{10}'s of individual subunits do not sum up to give the T_{10} of the overall unit. For example:

- The HDT of two equal CSTRs in series is exactly twice the HDT of each CSTR.

- The T_{10} for the same two CSTRs in series is more than twice the sum of the individual T_{10}'s.

This raises some practical questions:

- How should the T_{10} of a multiple-chamber contactor be determined using tracer studies?
- Is it necessary to conduct individual tracer studies for each chamber or is it sufficient to conduct an overall study of the whole contactor?
- How can the contact time of one chamber be determined based on the T_{10} of the overall system?

Conducting tracer studies of individual chambers in a multiple chamber ozone contactor is likely to be difficult. In addition, an analysis conducted by Lev and Regli (1990a) indicates that the computation of the contact time (T) based on tracer studies of the individual chambers is likely to lead to over design. The excess volume of a system designed by summing the T_{10}s of the separate chambers may be up to 9.5 times higher than one designed by the overall T_{10} approach. Therefore, EPA recommends the use of an overall tracer study of the whole contactor, in order to lower operation costs and to avoid overly complex tracer studies.

Disinfection credits for a multiple chamber contactor should be based only on the active chambers, those which have a detectable ozone residual. Based on the recommendation to use overall tracer studies, guidelines are needed for determining the disinfection credit for the active part of a system based on overall tracer studies. The average concentration in the individual chambers of a multiple-chamber system may deviate considerably from one another. Therefore, systems must be able to assign contact times for each chamber.

Lev and Regli, (1990a) evaluated the consequences of using a linear approximation based on relative contact chamber volumes and overall T_{10} of the contactor to determine the contact time of individual chambers in an ozone contactor:

$$T_{10,chamber} = (V_{chamber})\ (T_{10,total})\ /(V_{total}) \qquad (1)$$

Where:

$T_{10,chamber}$ = An approximation for the contact time of one chamber.

$T_{10,total}$ = T_{10} of the entire multi-chamber ozone contactor as determined by tracer studies

$V_{chamber}$ = Volume of the individual chamber

V_{total} = Overall volume of the multi-chamber ozone contactor

They demonstrated that such linear extrapolation may lead to an underestimate of the required T. This underestimate can be significant when the concentration in the different chambers deviate considerably from each other. This would be the case when the residual ozone concentration in one chamber is zero.

Considering the various safety margins that are included in the T_{10} approach, and considering the practical complexity involved in conducting separate tracer studies, EPA recommends the use of the linear approximation described in Equation 1 provided that the volume of the portion of the contactor that has zero residual ozone is less than half of the overall volume of the ozone contactor:

$$V_{inactive\ chamber}/V_{total} < 0.5$$

Where:

$V_{inactive\ chamber}$ = The volume of the chambers in the contactor where the ozone concentration is zero

V_{total} = The volume of the chambers with a residual

The following examples illustrate the computation of the overall inactivation performance of multiple-chamber systems using the linear approximation of Equation 1:

Example 0.2-1 Linear approximation to predict T_{10}

- An ozone contactor has three chambers in series. Each chamber has a volume of 353 cubic feet.

- The average ozone concentration in each chamber is:
  - First chamber: C_1=0 mg/L ozone.
  - Second chamber: C_2=1 mg/L ozone.
  - Third chamber: C_3 =0.5 mg/L ozone.
- C_1, C_2 and C_3 are the average concentrations, determined as described in Section 0.3.
- The utility measured T_{10} = 5 min for the entire ozone contactor.
- The volumetric fraction of the chamber which has no ozone residual is $V_1/(V_1+V_2+V_3)$ = 0.33 which is less than the 0.5 guideline. Therefore it is permissible to use Equation 1 in order to estimate the CT achieved in the ozone contactor.
- The total CT achieved by the ozone contactor is:

$$CT = (C_2)[(T_{10,total})(V_2)/(V_{total})] + (C_3)[(T_{10,total})(V_3)/(V_{total})]$$

$$CT = (1)[(5)(10)/(30)] + (0.5)[(5)(10)/(30)] = 2.5$$

- The CT achieved by the ozone contactor is 2.5 mg-min/L.

Example 0.2-2 Linear approximation not applicable

- An ozone contactor consists of:
  - A chamber with a volume of 70 cubic feet and equipped with a turbine agitator
  - Followed by a second chamber with a volume of 200 cubic feet.
- The first chamber has an ozone residual of 0.5 mg/L and the second chamber has an ozone residual of zero
- The $T_{10,total}$ = 8 min for both chambers at the peak flow rate
- The volumetric fraction of the chamber with no ozone residual is 200/270 = 0.74 which is greater then 0.5 of the total volume. Therefore, the use of Equation 1 to approximate the T_{10} of the chamber that contains an ozone residual is not recommended.
- The system may estimate its performance by either the CSTR approach taking into account only the detention time of the first chamber or conduct tracer studies of the first chamber.

0.2.4 Alternative Analysis of Disinfection Kinetics

The CSTR and the SFA approaches utilize the Chick-Watson inactivation rule directly rather than relying on the CT approach. The following section describes this alternative approach to represent the disinfection kinetics.

The Guidance Manual recommends that systems should calculate the inactivation level in their disinfection contactors by the CT approach. Table 0-2 presents CT data corresponding to specified inactivation levels of Giardia cysts and viruses by ozone. An alternative way to present the same information is by tables of the kinetic coefficients used to calculate the CT values.

The CT values presented in Table 0-2 were calculated based on batch-reactor experimental information that was fitted into a logarithmic correlation according to a first order Chick-Watson's rule (Chick, 1907; Watson 1908; and Hoff, 1987):

$$\log(I/I_0) = - k\,CT \qquad (2)$$

Where:

I/I_0 = Survival ratio of the Giardia cysts or viruses

C = Residual concentration of ozone in mg/L

T = Exposure time in min.

k = A kinetic coefficient which characterizes the specific rate of inactivation of the microorganisms at the appropriate temperature and pH.

Solving Equation 2 for k yields:

$$k = \frac{-\log (I/I_0)}{CT} \qquad (3)$$

Equation 3 can be used to calculate k values corresponding to the CT values in Table 0-2. Table 0-3 summarizes these k values. Equation 3 may also be used to transform inactivation levels (I/I_0) to CT values and vice versa.

The following example illustrates the use of the values presented in Table 0-3 to calculate the performance of multiple-chamber ozone contactors:

Example 0.2-3 Multiple-chamber Ozone Contactor

- An ozone contactor consists of three chambers in series .
- Temperature is 5 C.
- The first chamber has a 10 percent survival ratio for Giardia cysts, or $(I/I_0) = 0.1$, which also corresponds to 90 percent inactivation
- The second chamber has an $I/I_0 = 0.07$
- The third chamber has an $I/I_0 = 0.03$
- The total inactivation may be calculated by either summing CT's or summing logs of inactivation, as presented below.
- Summing CT's:
  - At 5 C the k for Giardia cysts = 1.58
  - The survival fractions are:

    First Chamber = 0.1
    Second Chamber = 0.07
    Third Chamber = 0.03

  - Therefore, the CT values in each of the chambers are:
    - First chamber:

      $CT = -\log(I/I_0)/k = -\log(0.1)/(1.58) = 0.63$

    - Second chamber:

      $CT = -\log(I/I_0)/k = \log(0.07)/1.58 = 0.73$

    - Third chamber:

      $CT = -\log(I/I_0)/k = -\log(0.03)/1.58 = 0.96$

  - Total CT is : 0.63 + 0.73 + 0.96 = 2.32
  - As indicated in Table 0-2, a CT of 2.32 is sufficient to achieve a 3-log inactivation of Giardia cysts.
- Summing logs of inactivation:
  - First chamber: $-\log(I/I_0) = -\log(0.1) = 1$
  - Second chamber: $-\log(I/I_0) = -\log(0.07) = 1.15$

TABLE 0-2

CT VALUES FOR
INACTIVATION BY OZONE

Giardia Inactivation	Temperature (C) <=1	5	10	15	20	25
0.5 log	0.48	0.32	0.23	0.16	0.12	0.08
1 log	0.97	0.63	0.48	0.32	0.24	0.16
1.5 log	1.5	0.95	0.72	0.48	0.36	0.24
2 log	1.9	1.3	0.95	0.63	0.48	0.32
2.5 log	2.4	1.6	1.2	0.79	0.60	0.40
3 log	2.9	1.9	1.4	0.95	0.72	0.48
Virus Inactivation						
2 log	0.9	0.6	0.5	0.3	0.25	0.15
3 log	1.4	0.9	0.8	0.5	0.4	0.25
4 log	1.8	1.2	1.0	0.6	0.5	0.3

TABLE O-3

k Values for Ozone Inactivation[1]

TEMPERATURE (C)	0.5	5	10	15	20	25
Inactivation of *Giardia* cysts	1.03	1.58	2.08	3.12	4.17	6.25
Inactivation of Viruses	2.22	3.33	4.00	6.67	8.00	13.3

(1) $k = -\log(I/I_0)/(CT)$ in L/mg-min. When Chick's rule is represented by the formula $\ln(I/I_0) = -K\,CT$ (ln stands for the natural logarithm) then k should be calculated by $k = 2.303(K)$

- Third chamber: $-\log(I/I_0) = -\log(0.03) = 1.52$
- The total logs of inactivation is:

  $-\log(I/I_0) = 1 + 1.15 + 1.52 = 3.67$,

- The 3.67-log inactivation of Giardia cysts is higher than the required 3-log inactivation

0.2.5 Continuously Stirred-Tank Reactor (CSTR) Approach.

The CSTR method assumes that the flow configuration in the ozone contactor approaches that of completely stirred reactor. In most cases, this calculation method is the most conservative approach. Studies by Schwartz et al (1990) suggest that well-operated turbine contactors approach ideal CSTR characteristics and the CSTR calculation is appropriate. In some cases, CSTR calculations offer the only apparent method to evaluate the performance of the ozone contactors. CSTR calculations should be used under the following conditions if systems have no other means for demonstrating the inactivation efficiency.

- Tracer data are not available,
- The required inactivation level is greater than 2.5-log, and ozone disinfection is applied in a single chamber contactor with $T_{10}/HDT \leq 1/3$.
- If either the required inactivation level is less than 2.5-log or $T_{10}/HDT > 1/3$ then the inactivation predicted by CT_{10} is appropriate provided that tracer data are available. If high resolution tracer data are available then the SFA method can be applied regardless of the level of inactivation required or the ratio of T_{10}/HDT.

In some cases, systems may actually receive more credit by using the CSTR approach then by using the T_{10} approach. Higher credits result when a low level of ozone disinfection such as 0.5-log is required and mixed contactors are used.

When using the CSTR approach, the inactivation performance should be evaluated for viruses and Giardia cysts, regardless of which required CT is higher. This recommendation results from the influence of flow characteristics on contactor performance, as discussed in Section 0.2.7.

The performance equation for a CSTR is based on two important assumptions:

1. The concentration of disinfectant and microorganisms is homogeneously distributed in the contactor.

2. First order Chick-Watson's law applies. That is, the rate of inactivation of the microorganisms is approximately proportional to the concentration of the microorganisms and the concentration of disinfectant.

The performance of a CSTR contact chamber is given by:

$$(I/I_0) = 1/[1 + 2.303(k)C(HDT)] \quad (4)$$

Where:

k = kinetic coefficient for microorganism inactivation [k values are listed in Table 0-4 (L/mg-min)]

(I/I_0) = Survival ratio of organisms

C = Average concentration of disinfectant (mg/L)

HDT = Hydraulic detention time (min)

Equation 4 may also be used to calculate the ozone concentration that is required to achieve a specified level of inactivation for a given HDT or to compute the HDT required to achieve a desired inactivation level for a given ozone concentration. Equation 5 restates Equation 4 for use in determining C or HDT

$$C(HDT) = [1-(I/I_0)]/[2.303\ k\ (I/I_0)] \quad (5)$$

The effects of mixing on improving disinfection effectiveness may be very significant in CSTR contactors, and are not accounted for in this model.

Examples demonstrating how to calculate the operating conditions necessary to meet the required inactivation levels by the CSTR approach are included in Section 0.2.8.2.

0.2.6 Segregated Flow Analysis (SFA)

SFA is a method that is often used to characterize chemical reactions. Better approximations may be determined through analysis and modelling of the specific details of the flow pattern in the ozone

contactor, but such modelling cannot be done based on tracer studies alone, as the SFA can. Comprehensive descriptions of the SFA can be found in several references including Levenspiel (1972) and Seinfeld and Lapidus (1984). The SFA assumes that the inactivation in a contactor can be determined by the product of the probabilities of two events: the probability distribution for water to remain in the contactor; and the probability distribution for organisms to survive as they pass through the contactor.

The first probability function describes the chances of a microorganism remaining in the contactor for a specified time period. The water passing through the contactor has a probability distribution, determined by tracer studies which indicate the detention time for each fraction of the flow through the contactor.

The second probability function describes the chances of a microbiological species surviving following exposure to a disinfectant for a certain amount of time. This probability function is given by the modified Chick's equation: $(I/I_0) = 10^{-kCt}$. Each fraction of the flow would have a different "t" for which this equation would apply. For example, a virus that is exposed for 1 minute to C=1 mg/L ozone when k=1 L/mg-min has 0.1 (10 percent) chances to survive.

The following illustrates the intuitive origin of the SFA approach:

- The flow in an imaginary contactor may be viewed by flow lines.
- A microorganism that is introduced at time t=0 will follow one of these flow lines.
- For simplicity, consider that only four flow lines exist as represented on Figure 0-7.
- A microorganism that is introduced in the feed to the contactor has some probability (P1) of following any one of these four lines.
- The microorganism will then remain for a specific detention time, characteristic of each flow line, in the contactor.
- This concept is presented schematically on Figure 0-7, where the flow lines are represented by four different tubes whose lengths (or detention times) correspond to the lengths of the flow lines on Figure 0-7.

- Microorganisms that are introduced into various tubes have different probabilities of survival (P2), because of different susceptibilities to disinfection in each of these tubes.

- The product of the probability that a microorganism will be carried into a specific tube (P1) times the probability of survival after being exposed to the hostile environment for the appropriate time (P2) is the probability that a microorganism introduced into the feed inlet will get out alive from a specific tube (P1)(P2).

For example, if 20 percent of the flow is directed into the first flowline and I/I_0 for this fraction of the flow equals 0.25, a microorganism has (0.2)(0.25) or a 5 percent chance of emerging alive from this specific flowline. The total survival of microorganisms that are introduced into the inlet to the entire contactor can be computed by summing up all four survival probabilities (P1)(P2).

Complete examples for the application of the SFA are included in Section 0.2.8.3. For SFA to be applied, a high resolution tracer study must be available. The requirements for a high resolution tracer study are:

- Appropriate time distribution of sampling points.

- Limited degree of scatter in sample points.

The first requirement is to have several sample points prior to the occurrence of T_{10} and less frequent sampling points thereafter. Several sampling points prior to T_{10} are essential to get an accurate representation of what is occurring in the early flow through the contactor, when organisms are most likely to exit the contactor while still viable. The second requirement if for a limited degree of scatter between the sample points. The plotted curve should ideally be continuous to allow for more accurate integration to predict the survival of microorganisms.

0.2.7 Relative Inactivation of *Giardia* Cysts and Viruses

In most cases, when the CT required for the inactivation of Giardia cysts is greater than the CT required for the inactivation of viruses, compliance with the inactivation requirements for Giardia cysts will

A. FLOW LINES IN A CONTACTOR

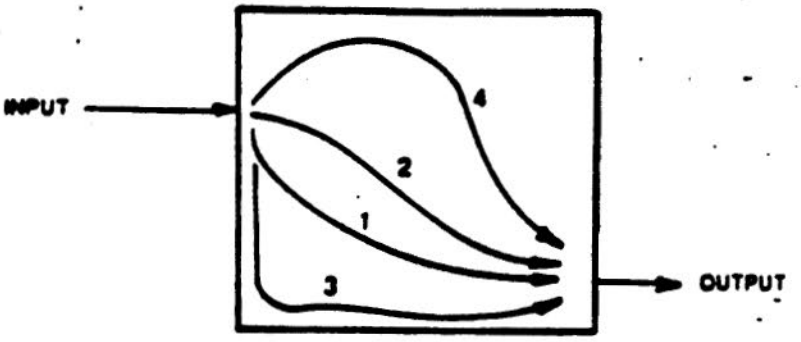

B. SCHEMATIC REPRESENTATION OF THE FLOW LINES

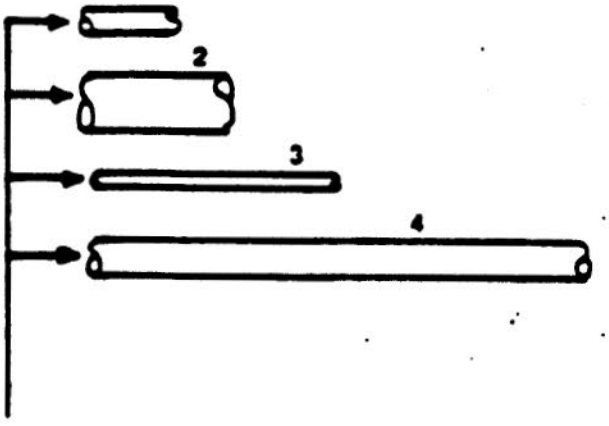

C. SURVIVAL PROBABILITY FOR AN ORGANISM

Flow Line	P_1 Fraction of Flow into the Flowline	P_2 (I/I_o) Survival Ratios	P_1P_2 Overall Survival Ratios
1	2/10	1/4	16/320
2	4/10	1/8	16/320
3	1/10	1/16	2/320
4	3/10	1/32	2/320
	SUM 1		37/320

FIGURE 0-7 - PRINCIPLE OF SEGREGATED FLOW ANALYSIS

assure compliance with the virus inactivation requirements. Specifically, this is true when:

$$k_{virus}/k_{cyst} > \log(I/I_0)_{virus}/ \log(I/I_0)_{cyst} \quad (6)$$

The SWTR, however, requires a higher level of inactivation of viruses than Giardia cysts. Therefore, ozone contactors that are characterized by a high degree of turbulence will find that, as the flow configuration approaches that of a CSTR (T_{10}/HDT < 1/3), compliance with the virus inactivation requirements may be a more demanding task than meeting the inactivation requirements for Giardia cysts. Consequently, an ozone contactor that has a T_{10}/HDT < 1/3 and a low (I/I_0) should be checked for compliance with the inactivation of viruses as well as for cysts. Another way to understand this is that as the inactivation indicated by CT_{10} increases, the 10 percent of the water passing through the contactor with less contact time than T_{10} becomes more significant for lowering the overall inactivation efficiency for all the water passing through the contactor.

0.2.8 Examples of Determining Contact Time (T)

This section presents examples for the application of the three general approaches - T_{10}, SFA, and CSTR - for determining contact time.

0.2.8.1 Evaluation Using T_{10}

The following four examples illustrate when the T_{10} approach should be used and when alternate approaches are appropriate. Procedures for calculating the required ozone residual based on the T_{10} approach are outlined in the examples.

Example 0.2-4 Inactivation Required >2.5-log

The Haworth Water Treatment Plant, Hackensack, New Jersey, uses a turbine ozone chamber followed by a contact chamber to provide additional contact time. A schematic of the contactor is shown on Figure 0-1. The treatment plant provides filtration after the ozone contactor. For the purposes of this example, although it is not the case for Hackensack, the

ozone system must provide disinfection for 2-log Giardia and 3-log virus inactivation to supplement filtration. The following conditions apply:

Water Temperature = 0.5 C
CT for 2-log Giardia = 1.9 mg-min/L
CT for 3-log virus = 1.4 mg-min/L

- A tracer study was conducted on one of the four ozone contactors. Figure 0-8 depicts the chart recorder of the raw data that were collected during the tracer study.
- The HDT at the flow rate of the study was 20 minutes, and the T_{10} occurs at 11 min.
- The T_{10}/HDT of 0.55, is greater than 1/3, making the T_{10} approach valid for this system.
- The CT for Giardia inactivation is the controlling CT because it is greater than the CT for virus inactivation.
- Using the T_{10} of 11 min, the residual needed to meet the CT requirement of 1.9 mg/L-min is determined as follows:

$$C = \frac{1.9 \text{ mg-min/L}}{11 \text{ min}} = 0.17 \text{ mg/L}$$

- As a result of using the T_{10} approach, the system must maintain an ozone concentration of 0.17 mg/L in the contactor to provide the necessary disinfection.

The application of the SFA method for this contactor is presented in Section 0.2.8.3.

Example 0.2-5 Low Detention Time, Inactivation Required <2.5-log

A system using slow sand filtration must provide disinfection for 1-log Giardia cyst and 2-log virus inactivation. The system has an ozone contactor equipped with a turbine mixer. The following conditions apply:

Water Temperature = 25 C
CT for 1-log Giardia = 0.16 mg-min/L
CT for 2-log virus = 0.15 mg-min/L

- The CT for Giardia cyst inactivation is greater than the CT for virus inactivation and is therefore the controlling CT.
- A tracer study was conducted for the ozone contactor and resulted in a T_{10} of 30 seconds.

- The HDT of the contactor at the flow rate of the study was 150 seconds.

- Thus T_{10}/HDT = 30/150 = 0.2, is less than 1/3, however, because the required inactivation is less than 2.5-log, the T_{10} evaluation for this system is appropriate.

- Based on the T_{10} evaluation, the residual needed to meet the CT requirement is determined as follows:

$$CT = 0.16 \text{ mg-min/L}$$

$$C = \frac{0.16 \text{ mg-min/L}}{0.5 \text{ min}} = 0.32 \text{ mg/L}$$

- Thus, according to this approach, the system must provide an ozone concentration of 0.32 mg/L to meet the inactivation requirements.

- Because of the low T_{10}/HDT value for this system, the CSTR approach is an alternative for determining C. This example is presented in Section 0.2.8.2.

Example 0.2-6 Low Detention Time, Inactivation Required >2.5-log

An unfiltered water system must provide disinfection for a 4-log inactivation of viruses and a 3-log inactivation of Giardia cysts. The ozone system uses a single chamber turbine contactor for disinfection:

- The hydraulic detention time measured at peak flow rate is 30 minutes and T_{10} determined by a tracer study is 9 minutes.

- The T_{10} approach is not recommended for this system because T_{10}/HDT of 0.3 is less than 1/3 and the required level of 4-log virus inactivation is higher than the 2.5-log level.

- SFA or the more conservative CSTR calculations may be used to determine the required ozone concentration for this system. Examples of the CSTR and SFA calculations are presented in Sections 0.2.8.2 and 0.2.8.3, respectively.

Example 0.2-7 High Detention Time, Inactivation Required <2.5-log

The Sturgeon Bay Water Treatment system (Rosenbeck, 1989) uses a series of two submerged turbine ozone contactors followed by a reactive chamber to disinfect ground water:

- The results of a tracer study conducted on one of the mixed contactors is shown on Figure 0-9.

- The T_{10} from this study is approximately 30 seconds while the hydraulic detention time is 62 seconds.

- T_{10}/HDT = 30/62 = 0.48 which is greater than 1/3. Therefore, the T_{10} approach is appropriate for this system.

In this case, the SFA method is not recommended as an alternative to the T_{10} approach because of the minimal detention times in the contactor. With such a short period for the collection of samples, the data are insufficient for the SFA method. The resolution of the tracer studies, apparent in Figure 0-9, will lead to an overly conservative estimate of the inactivation if differentiation is conducted by a forward algorithm.

0.2.8.2 Evaluations Using CSTR Calculations

The following two examples demonstrate the CSTR approach. One illustrates the benefit of the CSTR analysis over the T_{10} analysis. The other identifies conditions for which the CSTR approach is not practical.

Example 0.2-8 Low Detention Time, Inactivation Required <2.5-log

The system identified in Example 0.2-5 is a slow sand filtration plant, using ozone to provide for a 1-log Giardia cyst inactivation. Chlorine provides the 2-log virus inactivation. Because the level of inactivation required from ozone disinfection is less than <2.5-log, the system may choose any method for the determination of the contact time.

- A tracer study conducted on the ozone contactor resulted in a T_{10} of 30 sec for a HDT of 150 sec.
- The fraction of T_{10}/HDT is 0.2, which is less than 1/3, indicating that the CSTR approach may be appropriate.
- Chlorine provides disinfection for the viruses, therefore the CSTR calculation for the ozone disinfection requirements will be based on Giardia cyst inactivation.
- The following conditions apply:

  Water Temperature = 25 C
  CT for 1-log Giardia cyst = 0.16 mg-min/L

- Equation 5 from Section 0.2.5 applies for the CSTR calculation:

$$C(HDT) = [1 - (I/I_0)]/[(2.303)k\ (I/I_0)]$$

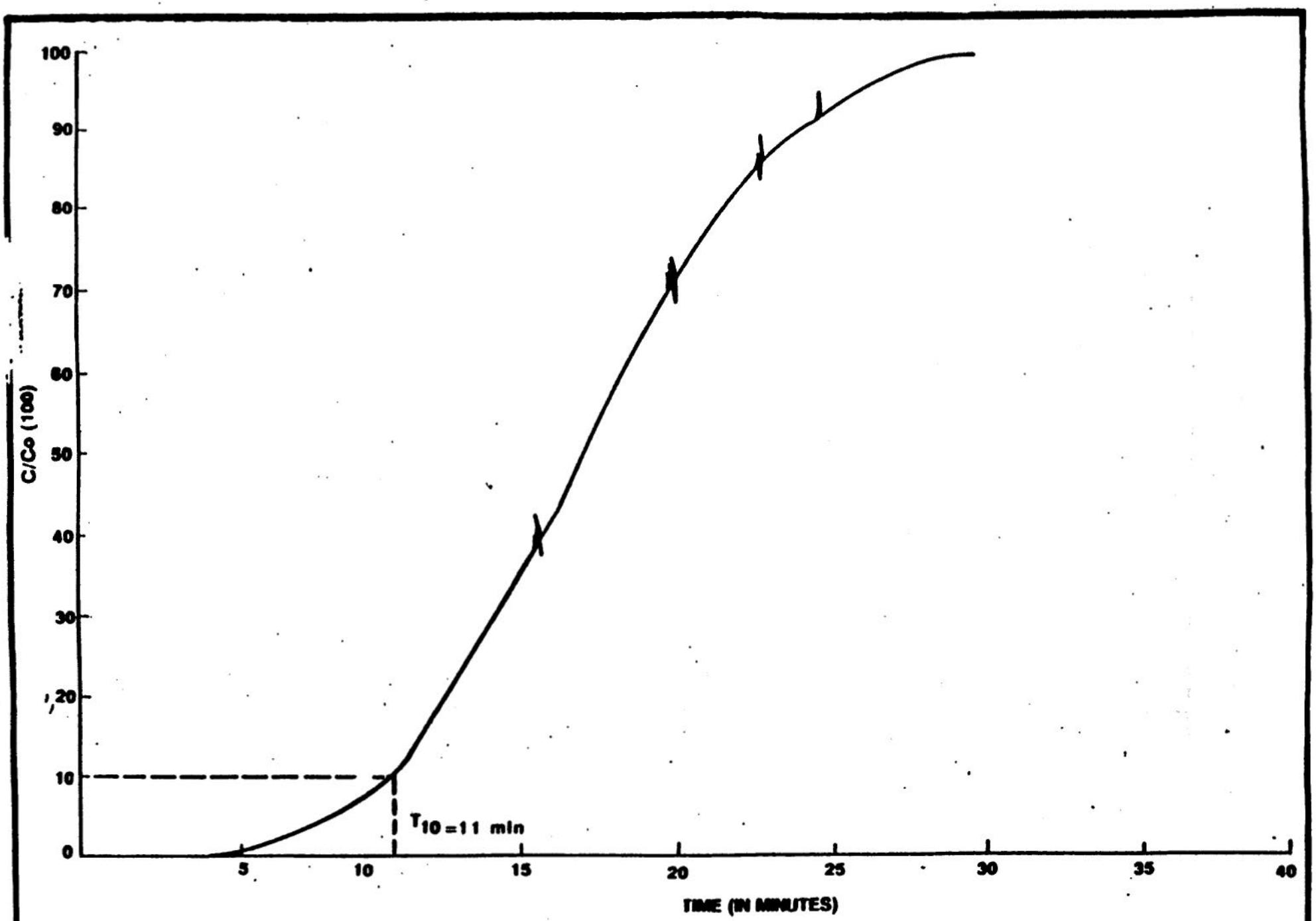

FIGURE 0-8- SEGREGATED FLOW ANALYSIS OF AN OZONE CONTACT CHAMBER-TRACER STUDY

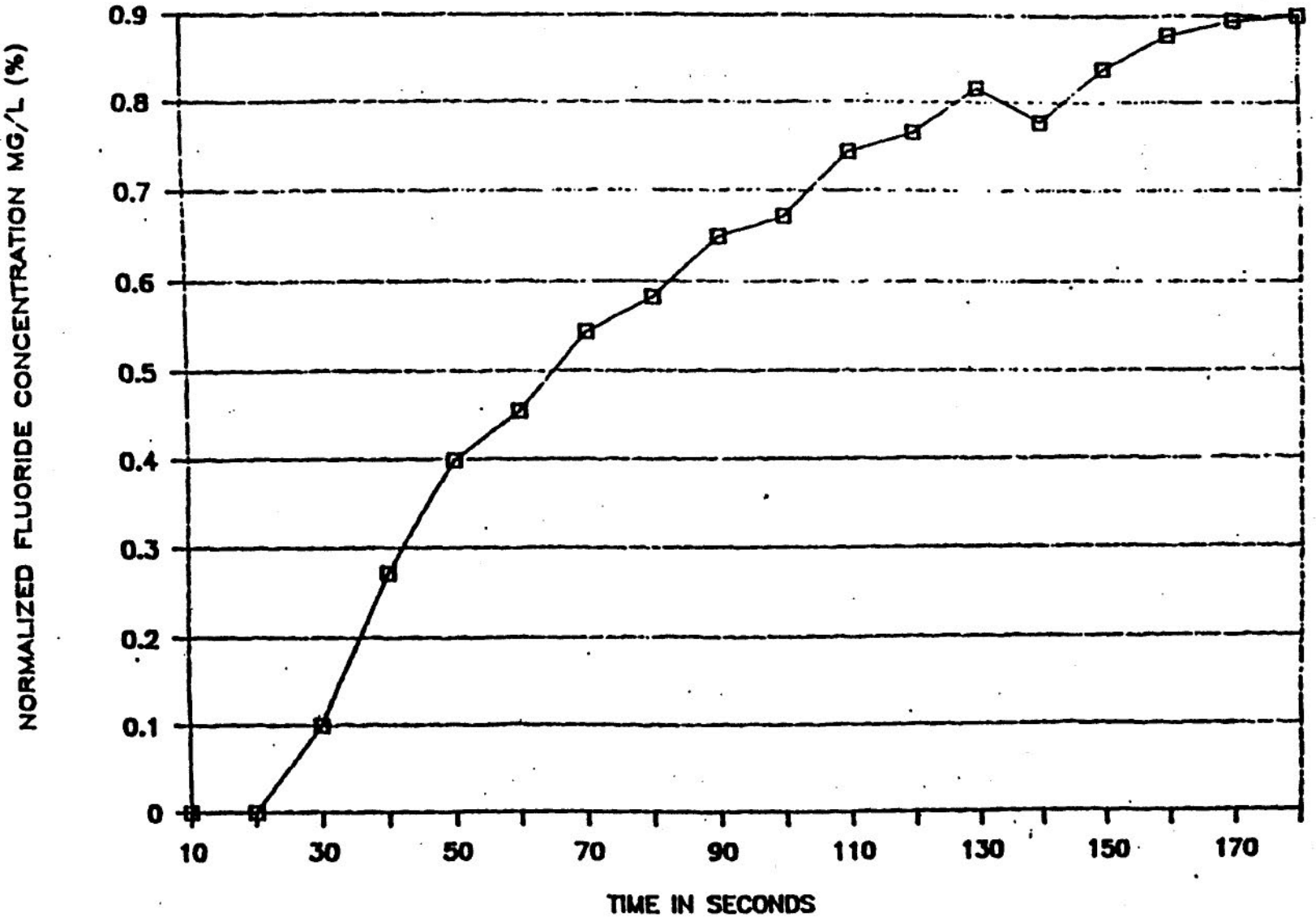

FIGURE 0-9 - TRACER STUDY OF STURGEON BAY OZONE CONTACTOR, G.L. ROSENBECK, (1989)

- The parameters are determined as follows:

  1. From Table 0-3, $k_{cysts} = 6.25$ for CT = 0.16 min/L at 25c
  2. For 1-log inactivation, $I/I_0 = 0.1$
  3. HDT = 150 sec or 2.5 min

- C is determined as follows:

  $C(HDT) = [0.9]/[(2.303)(6.25)\ (0.1)] = 0.625$ mg-min/L

  $C = 0.625/2.5 = 0.25$ mg/L

Thus, according to the CSTR approach, the system must provide an ozone concentration of 0.25 mg/L to meet the inactivation requirements. For this case, the system would prefer to use the CSTR approach rather than the T_{10} approach since the T_{10} approach would require a 0.32 mg/L ozone residual, as shown in Example 0.2-5.

Example 0.2-9 Low Detention Time, Inactivation Required >2.5-log

An unfiltered water system must provide disinfection for 4-log inactivation of viruses and 3-log inactivation of Giardia cysts. The system uses a single chamber turbine ozone contactor. Hydraulic detention time measured at peak flow rate is 30 minutes and T_{10} determined by tracer studies is 9 minutes. T_{10}/HDT is less than 1/3 and greater than 2.5-log inactivation is required, therefore the T_{10} approach should not be used. The CSTR or SFA methods are appropriate.

- The CSTR calculation must be conducted for both Giardia cysts and viruses to determine the controlling parameter
- Compute the C required for inactivation of Giardia cysts:
  - k cysts = 6.25 (Table 0-3).
  - For 3-log inactivation, $I/I_o = 0.001$
- Using the CSTR equation:

  $C(HDT) = [1-0.001]/[2.303(6.25)(0.001)] = 69.5$ mg-min/L

  $C = (69.5\ mg\text{-}min/L)/(30\ min) = 2.3$ mg/L

- Compute the required C for inactivation of viruses:
  - k_{virus} = 13.3 (Table 0-3)
  - For 4-log inactivation I/I_o = 0.001
- Applying the CSTR Equation:

$$C(HDT) = [1 - 0.0001]/[(2.303)\ (6.25)\ (0.0001)] = 326 \text{ mg-min/L}$$

$$C = (326 \text{ mg-min/L})/(30 \text{ min}) = 10.8 \text{ mg/L}$$

As indicated, virus inactivation is the controlling parameter, requiring a C of 10.8 mg/L. Because of the higher ozone residual needed for the virus inactivation, this example illustrates why systems should verify compliance with the inactivation requirements for viruses as well as for the inactivation requirements for Giardia cysts. Since obtaining an ozone residual of 10.8 mg/L is unrealistic, this example illustrates how stringent disinfection conditions can become assuming CSTR characteristics. Consequently, the SFA would result in a more feasible residual requirement for this system.

0.2.8.3 Evaluations Using SFA

The SFA method can be conducted on spread sheets. Table 0-4 presents the calculation procedure in spread sheet notations for a step tracer input:

- The first column of Table 0-4 represents the sequential numbering of consecutive tracer study measurements or digital measurement points fed into the computer.
- The second column represents the time interval that elapsed between the step change in tracer concentration and the sampling of the specific tracer point.
- The third column represents the tracer effluent concentration at a point in time determined by the analyzer (spectrophotometer conductivity meter, etc.) reading.
- The fourth column represents the tracer response on a scale of 0-1, where 0 corresponds to background reading of the analyzer and 1 to ultimate response after a long time interval. In other words, it is C_{out}/C_{in} where C_{out} is the tracer concentration in the outlet of the contactor and C_{in} is the baseline tracer concentration in the inlet.

Seq. No.	Time	height	F(t)	I(t)	$10^{\Delta Ct}$	Es(t)	IS(t)
1	t_1	h_1	$F_1=h_1/h_n$	$I_1=(I_2+I_1)/(t_2-t_1)$	$10^{\Delta Ct1}$	$Es_1=F_1 10^{\Delta Ct1}$	$Is_1(t_2-t_1)$
2	t_2	h_2	$F_2=h_2/h_n$	$I_2=(F_3+I_2)/(t_3-t_2)$	$10^{\Delta Ct2}$	$Es_2=I_2 10^{\Delta Ct1}$	$Is_2(t_3-t_2)$
i	t_i	h_i	$F_i=h_i/h_n$	$I_i=(I_{i+1}+I_i)/(t_{i+1}-t_i)$	$10^{\Delta Cti}$	$Is_i=I_i 10^{\Delta Cti}$	$Is_i(t_{i+1}-t_i)$
n	t_n	h_n	$F_n=1$	$I_n=0$	$10^{\Delta Ctn}$	$Is_n=0$	$\frac{0}{(I/I_0 = \text{sum } (Es \Delta t)}$

TRACER CURVE FROM STEP INPUT

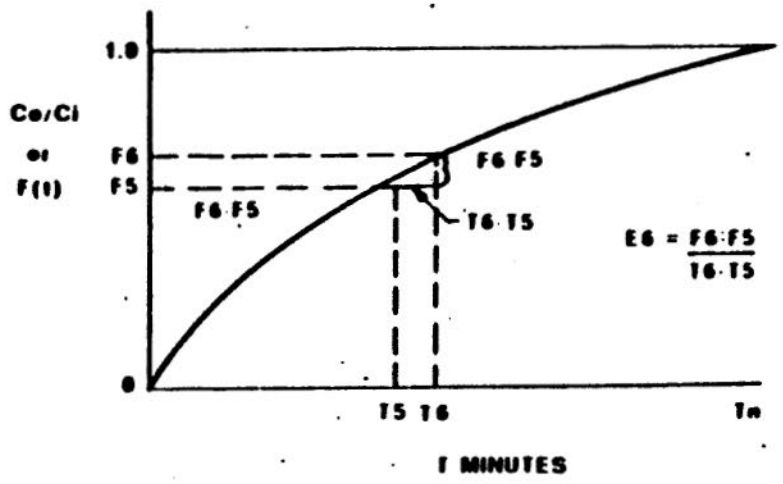

NOTE: GUIDANCE FOR CONDUCTING TRACER STUDIES IS GIVEN IN APPENDIX C

TABLE 0-4 -SPREAD SHEET NOTATIONS OF SEGREGATED FLOW ANALYSIS FOR A STEP TRACER

- The fifth column represents the forward derivative of the F(t) response. It is the slope of the tracer curve at a specific time interval, or the rate at which C_{out}/C_{in} changes with respect to time at different intervals in time. Note that by forward evaluation of the derivative: $E(t) = [F(t+dt)-F(t)]/dt$ the E(t) curve is shifted by half a dt toward the origin.

- This method of differentiation introduces an inherent safety margin to the calculation. Systems can reduce this safety margin by collecting more tracer points at the initial period of the tracer response, when the response is starting to increase.

- This period has the largest effect on the accuracy of the tracer analysis because most of the contribution to the total survival of microorganisms comes from the organisms that remain only for short time interval in the contactor.

- The sixth column represents Chick's inactivation rule, computed at the concentration and the appropriate 10^{-kCt}.

- The seventh column represents the survival expectancy function ($Es(t) = E(t)(10^{-kCt})$ which is the product of columns 5 and 6.

- The eighth column represents the organism survival in each segment passing through the contactor. It is also known as the integral of the survival expectancy function (Es presented in the 7th column).

- The survival ratio (I/I_0) is the sum of column 8. This represents the sum of organism survival in all the water segments passing through the contactor.

- Table 0-4 illustrates only one form of performing the integration (i.e., quadratic integration). Other integration methods can also be used.

- The corresponding log inactivation and the corresponding calculated CT may be computed by the procedures outlined in Section 0.2.4.

The following examples illustrate the use of the SFA method to calculate conditions in ozone contactors, and a situation where SFA cannot be used.

Example 0.2-10 Turbine Contactor

As noted in Example 0.2-4, the ozone system at Haworth Water Treatment Plant, uses a turbine ozone chamber followed by a reactive

chamber to provide additional contact time. A tracer study was conducted on one of the contactors resulting in a T_{10} value of 11 minutes for a HDT of 20 minutes. Using the same conditions as the above cited example, the SFA will be conducted on the tracer data. The following illustrates a step by step procedure for conducting a SFA:

- The digitized tracer response (F(i)) is depicted in Figure 0-10 as a function of t(i) where:
  - i stands for the consecutive numbering of randomly chosen points from the tracer study chart, and
  - t(i) is the corresponding time coordinate.
- The slope of the tracer curve, also known as the density of the expectancy function, E(t) approximated by the following equation is depicted in Figure 0-10.

$$E(i) = [F(i+1)-F(i)]/[t(i+1)-t(i)]$$

- The digitized points were not translated into a smooth curve in order to avoid numeric compromises.
- The survival expectancy (Es(t)) was then calculated by $Es(i)=Et(i)(10^{-kCt(i)})$ and summed to give the survival ratio (I/I_0) as shown in Table 0-5.
- Figure 0-11 depicts the integration for conditions where the ozone residual is C = 0.15 mg/L.
- The cumulative survival ratio is 0.00982 which is below 0.01 assuring compliance with the 2-log or 99 percent inactivation requirement for Giardia cysts. A survival ratio of <0.01 corresponds to an inactivation of greater than 99 percent or 2-log.

The residual value determined from this method is lower than C=0.17 mg/L predicted by the T_{10} approach presented in Example 0.2-4. Although this example only shows a small difference in C values needed, other cases may result in a greater reduction of C compared to the C resulting from the T_{10} approach.

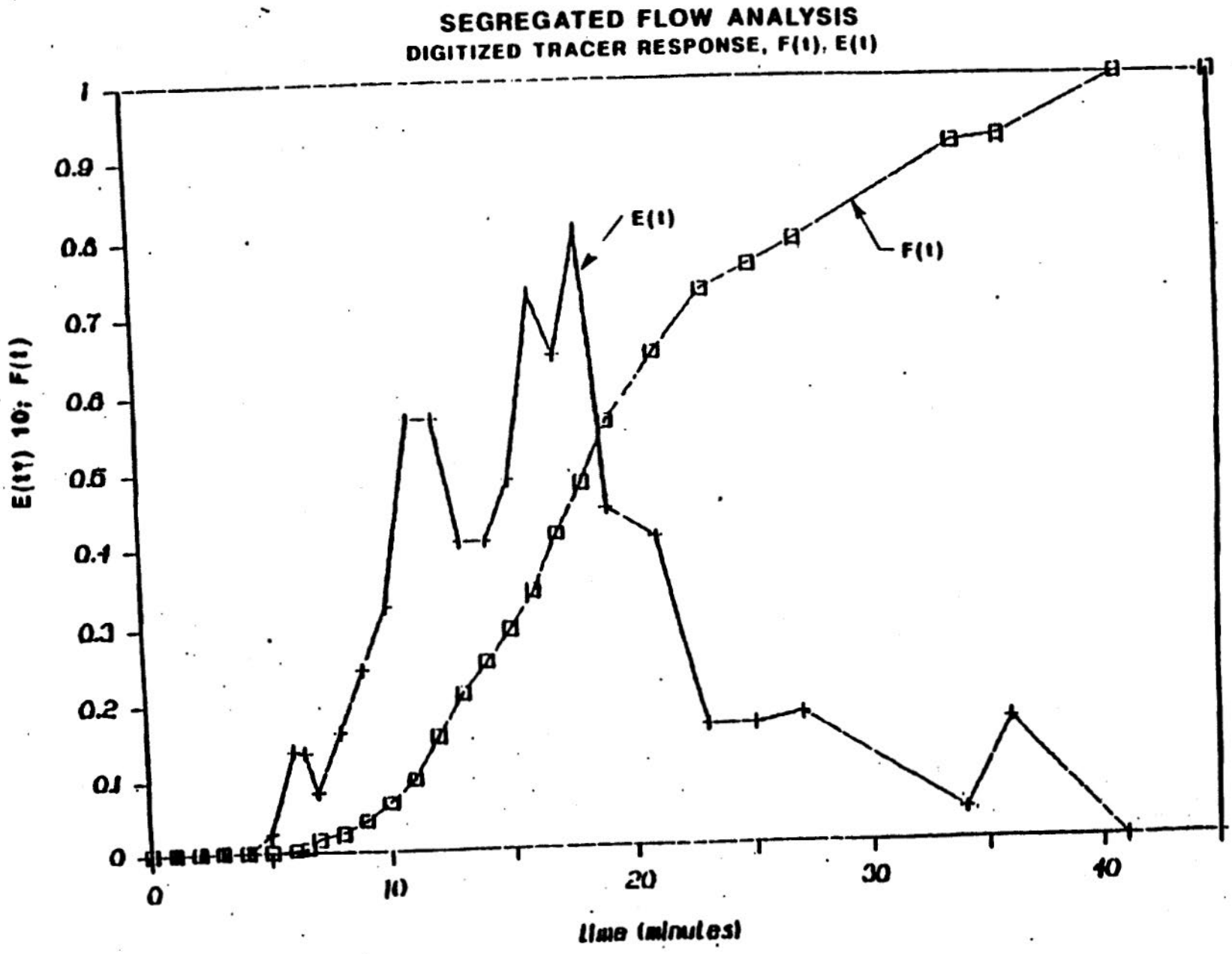

FIGURE 0-10- SEGREGATED FLOW ANALYSIS OF AN OZONE CONTACT CHAMBER-INTEGRATION OF SURVIVAL EFFICIENCY

TABLE O-5

Segregated Flow Analysis
of an Ozone Disinfection Contactor at Hackensack

time (min)	height (mm)	F(t)	E(t)	10^{-kCt} (C=0.16 k=1.03)	Es= $=E(t)10^{-kCt}$	$(Es)\Delta t$
0	0.0	0.000	0.000	1.000	0.00000	0.00000
1	0.0	0.000	0.000	0.708	0.00000	0.00000
2	0.0	0.000	0.000	0.502	0.00000	0.00000
3	0.0	0.000	0.000	0.355	0.00000	0.00000
4	0.0	0.000	0.000	0.252	0.00000	0.00000
5	0.0	0.000	0.002	0.178	0.00043	0.00013
6	0.3	0.002	0.014	0.126	0.00173	0.00035
6.5	0.5	0.004	0.013	0.106	0.00143	0.00215
7	2.0	0.016	0.008	0.089	0.00072	0.00072
8	3.0	0.024	0.016	0.063	0.00102	0.00204
9	5.0	0.040	0.024	0.045	0.00108	0.00324
10	8.0	0.065	0.032	0.032	0.00102	0.00408
11	12.0	0.097	0.056	0.022	0.00127	0.00889
12	19.0	0.153	0.056	0.016	0.00090	0.00630
13	26.0	0.210	0.040	0.011	0.00045	0.00225
14	31.0	0.250	0.040	0.008	0.00032	0.00160
15	36.0	0.290	0.048	0.006	0.00029	0.00174
16	42.0	0.339	0.073	0.004	0.00027	0.00243
17	51.0	0.411	0.065	0.003	0.00018	0.00144
18	59.0	0.476	0.081	0.002	0.00016	0.00160
19	69.0	0.556	0.044	0.001	0.00006	0.00066
21	80.0	0.645	0.040	0.001	0.00003	0.00030
23	90.0	0.726	0.016	0.000	0.00001	0.00004
25	94.0	0.758	0.016	0.000	0.00000	0.00000
27	98.0	0.790	0.017	0.000	0.00000	0.00000
34	113.0	0.911	0.004	0.000	0.00000	0.00000
36	114.0	0.919	0.016	0.000	0.00000	0.00000
41	124.0	1.000	0.000	0.000	0.00000	0.00000
45	124.0	1.0000	0.000	0.000	0.00000	0.00000

$\Sigma(E_s)\Delta t + = I/I_0 =$ 0.00982

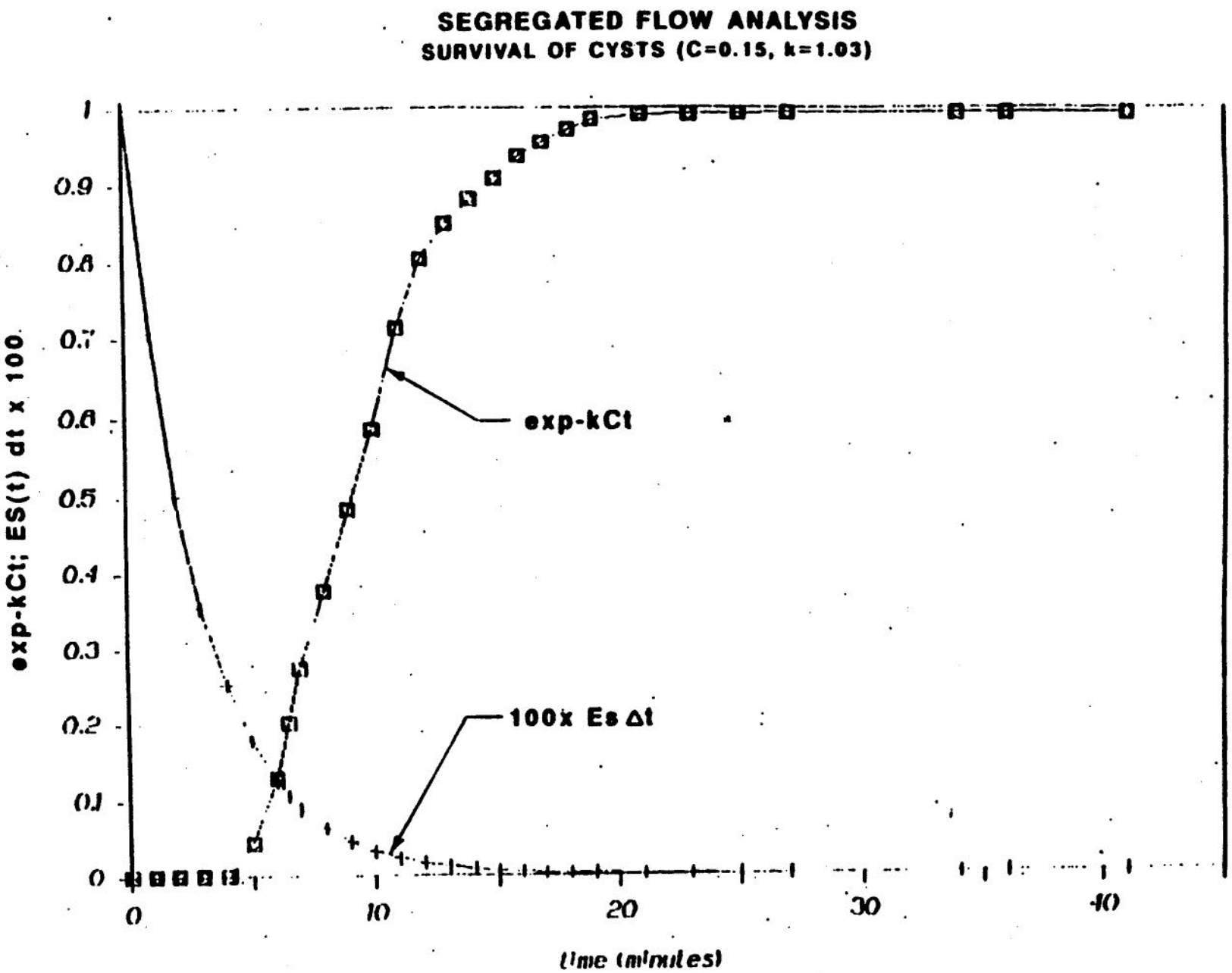

FIGURE 0-11 - SEGREGATED FLOW ANALYSIS OF OZONE CONTACT CHAMBER

0.2.9 ESTIMATING T

The results of this section are summarized in Figure 0-12. The decision tree shows the applicable methods of estimating T for each approach, and provides a quick means to compare alternatives and make a selection.

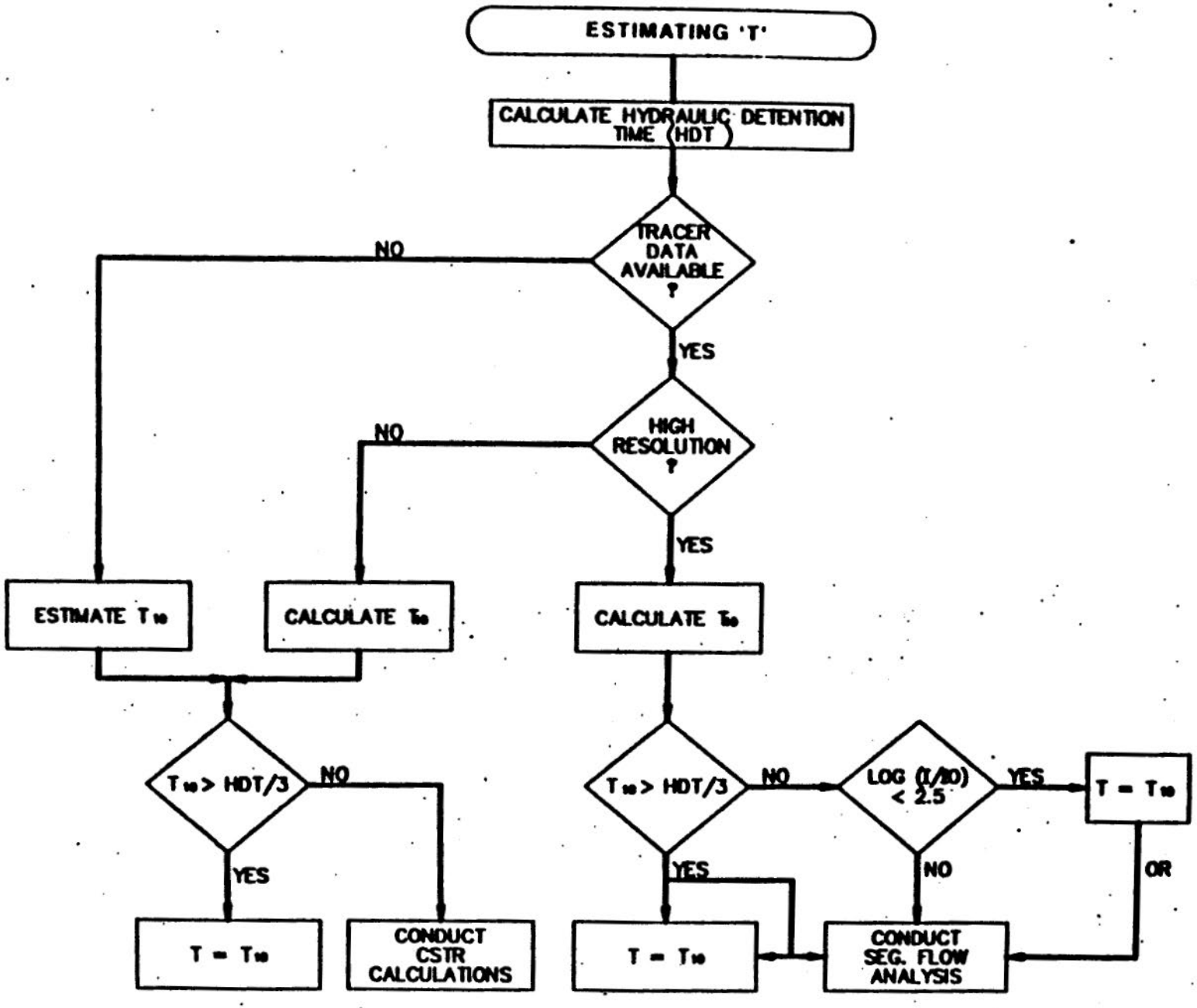

FIGURE 0-12 - DECISION TREE FOR ESTIMATING T

0.3 DETERMINATION OF OZONE CONCENTRATION (C)

0.3.1 Introduction

This section presents ways to measure or estimate the ozone concentration, C, for the calculation of CT. An alternative, more elaborate concept, requiring better characterization of the hydrodynamics of the ozone contactor is presented in Section 0.4 of this appendix.

EPA recommends use of the average dissolved ozone concentration in the water for C for all types of ozone contactors. The average concentration may be determined by one of following methods:

1. Direct measurement of the concentration profile of dissolved ozone in each contact chamber

2. Indirect prediction of the average concentration by assuming a set of conservative correlations between an observed variable such as the concentration of ozone in the outlet from the ozone chamber and the average concentration within the ozone chamber.

The application of these methods to estimate the average concentration should take into account the gas/liquid flow configuration in the ozone contactor. The next section presents a short discussion of the types of liquid/gas contact in ozone chambers, followed by two sections that describe the methods to estimate the average concentration in the chamber based on simple measurements.

Classification of Ozone Chambers

Ozone contactors currently in use or in design stage in the US may be classified into four types of flow configurations as illustrated on Figure 0-13. This, of course, does not preclude the use of other types of contactors. The four configurations are as follows:

1. Continuously Stirred-Tank Reactor (CSTR):

   Ozone contactors using turbine agitators, where the water may be considered uniformly mixed as shown on Figure 0-13, diagram 1. Studies conducted in a full scale turbine contact chamber indicate that turbine contactors may be considered uniformly

mixed (Schwartz et, al., 1990). This study was conducted in the first contact chamber under conditions of high ozone demand. Therefore, it is assumed that under less stringent kinetic conditions, turbine contactors can still be considered uniformly mixed.

2. Counter-Current Flow Chambers

In these chambers, the water flows opposite the direction of the gas bubbles. For example, the first and third chambers in the Los-Angeles ozone treatment system, as shown on Figure 0-2.

3. Co-Current Flow Chambers

In these chambers, the gas bubbles and the water flow in the same direction. For example, the Deep U-Tube contactor shown in Figure 0-5 and the Static Mixer contactor. This is the case also for the conventional gas/liquid contact chambers such as the second contact chamber in the configuration designed for the East Bay MUD water disinfection system, as shown on Figure 0-4.

4. Reactive Flow Chambers

In these chambers, no gas (and ozone) is being introduced into the chamber or conduit. The second and fourth chambers of the Los Angeles water disinfection system are reactive chambers (Figure 0-2).

0.3.2 Direct Measurement of C

Direct measurement of the dissolved ozone concentration is the preferred method to determine the ozone concentration in ozone contact chambers. However, very little full scale experience is currently available with this type of measurement. Some guidelines were developed based on the limited studies conducted at the Haworth, NJ (Schwartz et al. 1990) and Los Angeles water treatment systems (Stolarik and Christie, 1990). The guidelines developed for direct measurement of ozone concentration in the liquid phase are detailed in the following sections.

Analyze Each Chamber Separately

Every chamber of a multiple-chamber unit should be analyzed separately. Different chambers in series exhibit different ozone consumption rates and reactivities and, therefore, are likely to have different dissolved ozone profiles.

1 TURBINE CHAMBER

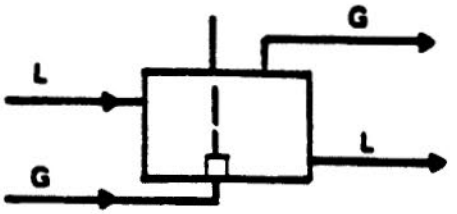

2. COUNTER-CURRENT CHAMBER

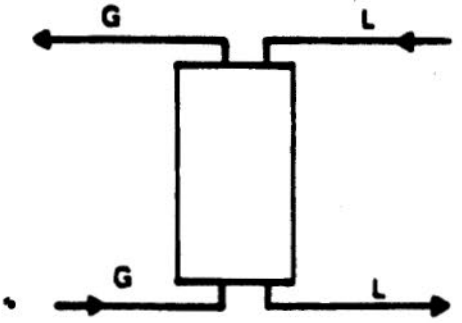

3. CO-CURRENT CHAMBER

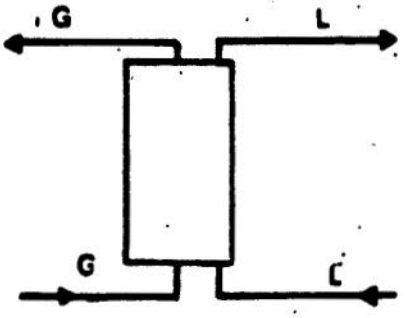

4. REACTIVE FLOW CHAMBER

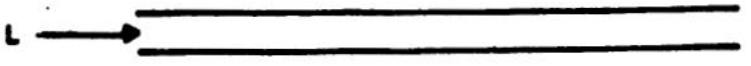

L: Liquid
G: Gas

FIGURE 0 13- FLOW CONFIGURATIONS IN OZONE CONTACTOR CHAMBERS

Avoid Interference From Gas Bubbles

Gas bubbles may strongly interfere with the measurement of ozone concentration, particularly if some bubbles are carried into the sampling taps. This interference may be reduced by directing the sampling port opposite to the direction of the bubble flow in order to prevent gas from entering the sampling tube. Additionally, the operator should verify, by visual inspection, that the sample water does not contain gas bubbles.

Systems using in-situ ozone analyzers should be careful to prevent direct contact of gas bubbles with the measuring probe which is usually a gas permeable membrane. Such contact may bias the measurements and give high results.

Minimize Distance to Ozone Analyzers

Minimize the distance from the sampling ports to the ozone analyzer to limit ozone consumption by reducing agents in the water. This consideration is particularly important when evaluating the concentration profile in chambers with high ozone demand such as the first chamber in multiple-chamber units.

Provide Proper Spacial Distribution

The vertical profile of the ozone concentration in ozone contact chambers should be measured in at least five vertical locations and at least two different horizontal locations for each vertical sampling point within the contact chamber. Each sample should represent the time averaged concentration at the specific location. This may be achieved by sampling a large volume of water into a container and analyzing the water by the indigo trisulfonate method (Bader and Hoigne, 1982). In-situ measurement of ozone should be carried out over a sufficient time interval to suppress temporal fluctuations. Such instruments should be initially calibrated by the indigo trisulfonate method. Facilities that have more than 25 percent deviation between the average concentration at two horizontal locations should collect additional measurements at a third location. The average of all measurements may be taken as the average concentration of dissolved ozone in the ozone contact chamber. For systems with a symmetrical vertical distribution of ozone concentration

the vertical sampling points should be equidistant. Systems with an asymmetrical distribution of available sampling points can perform an integration of the data to estimate the average concentration in the chamber. An example of this is given at the end of this section.

Some contact chambers, such as the Deep U-Tube chambers, static mixers and reactive flow chambers have a high length to width ratio, where the length of the chamber in the direction of fluid flow is greater than four times the cross section length. These chambers have more uniform radial concentration profiles, eliminating the need to measure the concentration at various vertical or horizontal locations. Therefore, measuring the concentration profile at several points along the flow path should be sufficient to accurately determine the average concentration.

Select Representative Locations

All sampling positions should be placed in representative locations, avoiding stagnant zones and zones near the wall. Measurements in stagnant locations will lead to low values of the average residual concentrations. While measurements at the wall may result in either an underestimate or overestimate of the residual depending on the ozone flow pattern.

Systems having two or more identical parallel ozone contact chambers may determine the average ozone concentration by measuring the concentration profile at one horizontal location in each contact chamber. These systems should, however, show by dual or triple horizontal measurements in at least one of the parallel chambers that the measurement in the particular horizontal location adequately represents the concentration profile in the contact chamber.

Example 0.3-1

A system with a co-current chamber with dimensions of 10′ X 10′ x 20′ was sampled to determine the average concentration in the chamber. In accordance with the recommended guidelines, the following samples were taken:

Water Depth (ft)	Ozone Residual (mg/L) H_1	H_2
2	0.1	0.12
6	0.15	0.17
10	0.15	0.14
14	0.3	0.25
18	0.6	0.65

- The horizontal sampling point measurements are within 25 percent of each other indicating that no additional horizontal sampling is needed. Figure 0-14a shows the sampling locations and the resulting ozone profile.

- Average the H_1 and H_2 sampling points to determine C_{avg}: $C_{avg} = (0.1 + 0.15 + 0.15 + 0.3 + 0.6 + 0.12 + 0.17 + 0.14 + 0.25 + 0.65)/10 = 0.26$. C_{avg} equals 0.26 mg/L, which is C for the chamber.

Example 0.3-2

A system with a co-current chamber and the same dimensions of the system in Example 0.3-1 has sampling results as follows:

Water Depth (ft)	Ozone Residual (mg/L) H_1	H_2	Average[1]
2	0.1	0.12	0.11
8	0.16	0.14	0.15
14	0.27	0.3	0.285
16	0.70	0.73	0.715
18	0.62	0.61	0.615

[1] Average = $(H_1 + H_2)/2$

- The sampling points are not vertically equidistant so the system will plot the average ozone concentration of the horizontal sampling points versus depth to calculate the area under the curve. This approach should only be used if the sampling points cover the range of the water depth.

- As shown on Figure 0-14b, the area under the curve is determined for the range of depths sampled from 2 to 18 ft.

- Several methods can be used for calculating the area including:

    - Measurement with a planimeter
    - Mathematical methods such as:
        - Simson's Rule
        - Runge Kutta

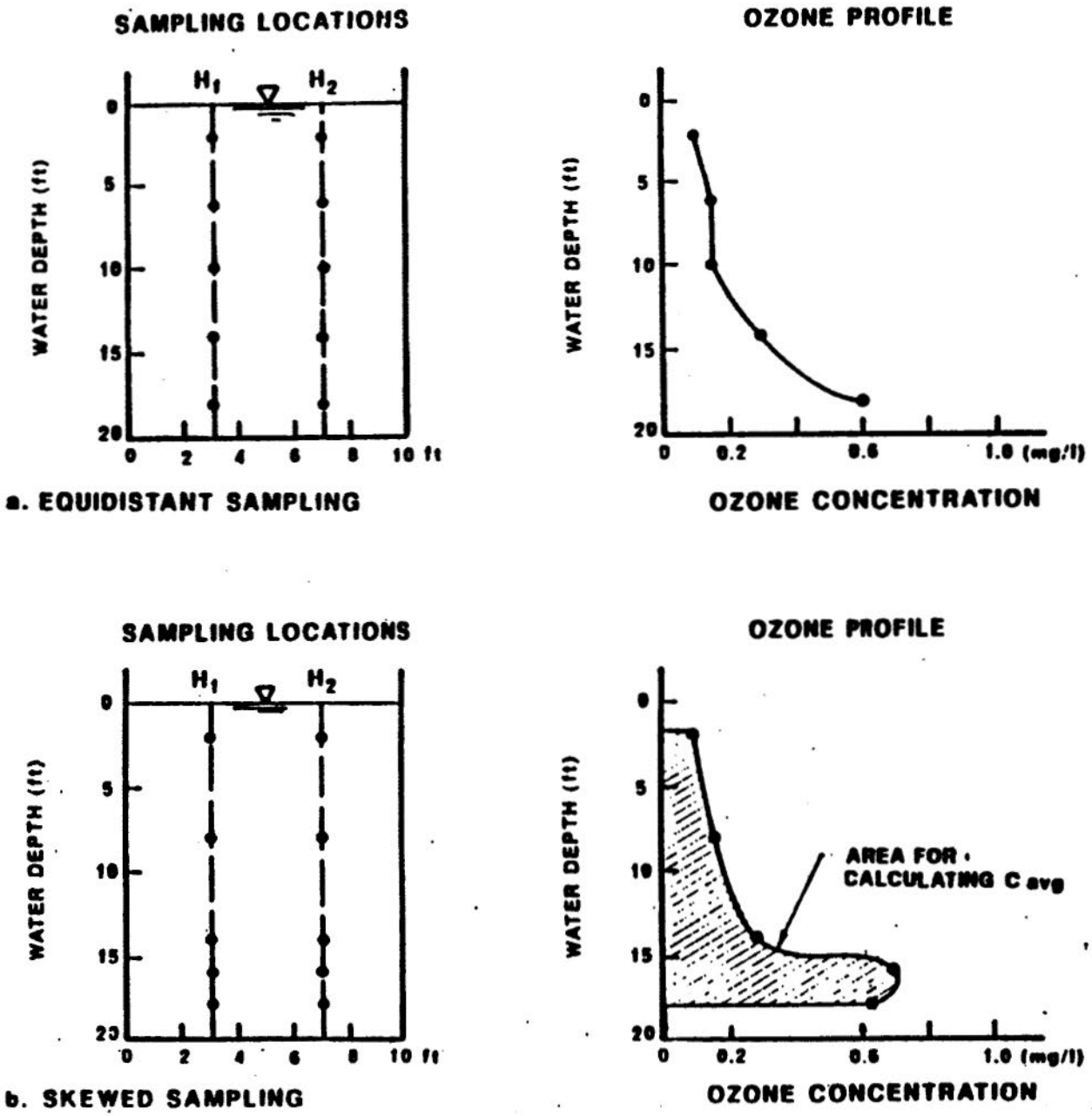

FIGURE 0-14 - DIRECT MEASUREMENTS FOR DETERMINING C

- The area under the curve is in units of mg/L-ft. C_{avg} is determined as:

$$\frac{\text{area (mg/L-ft)}}{\text{range of depth sampled (ft)}}$$

- For this data, use of a planimeter results in an area of 5.44 mg/L-ft, with the concentration determined as follows:

$$\frac{5.44 \text{ mg/L - ft}}{18 \text{ ft} - 2 \text{ ft}} = 0.34 \text{ mg/L}$$

0.3.3 Estimating C Based on Residual Measurements at the Outlet

For many systems, measuring ozone profiles in their ozone chamber may be impractical because of physical constraints. These systems may estimate C in the chamber based on measurements of the ozone residual at the outlet from the chamber. EPA has established correlations for different types of gas-liquid contact configurations currently in use in ozone contactors. These relationships were derived based on conservative assumptions regarding the type of flow configuration in the contactor. Due to the highly reactive nature of ozone the values for C vary slightly between first chambers and subsequent chambers. The recommended concentrations for first and subsequent chambers are summarized in Table 0-6.

0.3.3.1 First Chambers

A first chamber is the chamber in which ozone is initially introduced. In establishing guidelines for determining C values for the first ozone contact chamber, the following items were considered:

1. The relationship between C and the outlet concentration in the first chamber of a multiple-chamber system (or single chamber) may be very sensitive to the reaction order of the ozone consumption kinetics.

   The average concentration in the contactor may be less than 10 percent of the outlet concentration. This was demonstrated in pilot plant studies conducted in a multiple chamber system by Stolarik and Christie, 1990. Therefore, general relationships between the residual ozone concentration at the outlet from a first (or single) ozone contact chamber and the average concentration in this chamber cannot be developed.

TABLE 0-6

CORRELATIONS TO PREDICT C BASED ON OUTLET OZONE CONCENTRATIONS[1,3]

	FLOW CONFIGURATION			
	TURBINE	CO-CURRENT FLOW	COUNTER-CURRENT FLOW	REACTIVE FLOW
First Chamber	C	PARTIAL[2] CREDIT	PARTIAL[2] CREDIT	NOT APPLICABLE
Subsequent Chambers	$C = C_{out}$	$C = C_{out}$ or $C = (C_{out} + C_{in})/2$	$C = C_{out}/2$	$C = C_{out}$

NOTES:

1. Definitions:

   C — Characteristic Concentration (mg/L)

   C_{out} — Dissolved ozone concentration at the outlet from the chamber (mg/L)

   C_{in} — Concentration of ozone at the inlet to the chamber (mg/L)

2. 1-log of virus inactivation providing that $C_{out} > 0.1$ mg/L and 1/2-log Giardia cysts inactivation providing that $C_{out} > 0.3$ mg/L.

3. Alternatively, C may equal the average concentration as evaluated by the direct measurement method (Section 0.3.2).

2. The rate of disinfection of viruses (coliphage) by ozone often decreases with respect to contact time whereby the initial inactivation rate is very fast and deteriorates afterwards.

3. Pilot plant experiments reported by Wolfe et al, (1989) suggest that the inactivation of organisms including MS2 bacteriophages, Giardia muris cysts, R2A bacteria and E. Coli, in the first chamber of a multiple-chamber reactor is very rapid even when high ozone demand waters are used.

Considering these items, EPA recommends a general guideline of crediting the first ozone chamber with CT credits equivalent to 1-log virus inactivation and 0.5-log Giardia cyst inactivation, provided that the residual concentration measured at the outlet from the first contact chamber exceeds 0.1 mg/L and 0.3 mg/L, respectively, regardless of the contactor configuration. However, this guideline does assume that the volume of the first chamber is equal to the volume of subsequent chambers. The credit for 1-log virus inactivation at an outlet residual of 0.1 mg/L may appear conservative with respect to MS2 bacteriophage data, however, only limited data for ozone inactivation of the animal viruses of concern is currently available. Preliminary test results indicate that bacteriophage may not be an appropriate indicator for virus inactivation by ozone (Finch, 1990).

Systems may prove higher performance of their first contact chambers by measuring the concentration profiles in the first chamber, as outlined in Section 0.3.2 or by applying the more sophisticated methods that are presented in Section 0.4.

0.3.3.2 Subsequent Chambers

The correlations in Table 0-6 are based on analysis of the dissolved concentration profile in liquid/gas contacting chambers. All correlations rely on the accurate measurement of ozone concentration outside of the gas/liquid contacting regime. Concentrations at the outlet from the ozone contact chambers can be measured accurately without interferences from the ozone bubbles. The correlations represent the highest possible estimate of C that can be supported without site-specific test data. These estimates are conservative and systems may choose to determine C based on

direct measurement of the concentration profile in the contact chamber, or use one of the procedures recommended in Section 0.4.

Correlations were developed for the four types of flow configurations:

- Turbine
- Counter Current Flow
- Co-current Flow
- Reactive Flow

Turbine

For turbine chambers or rigorously mixed chambers, the flow characteristics in the chamber approach that of a CSTR and, therefore, the concentration at the outlet from the contactor (C_{out}) is assumed to be representative of the dissolved concentration of ozone in the liquid phase (C). Currently, contactors using turbine agitators appear to approximate CSTR characteristics (Schwartz et al, 1990). Other systems with T_{10}/HDT values less than 0.33 may use the same correlations. This correlation is applicable to every chamber, including turbine contactors used for first chambers or as a single chamber contactor.

The measurement of ozone concentration in the gas phase is a possible alternative for determining C although such correlations will be highly site specific. A procedure to develop site specific correlations between the average ozone concentration and the off-gas concentration is presented in Section 0.4.2.1.

Counter-Current Flow

In counter-current flow, the water flows opposite to the direction of bubble rise. Measurement of the concentration profile in such systems revealed that the concentration in the liquid phase uniformly increased with depth in the ozone chamber as shown in Figure 0-15. The maximum concentration in the chamber is achieved near the water outlet from the ozone chamber.

Measurement of the ozone concentration in an ideal plug flow chamber reveals that the average concentration is only 25 to 50 percent of the outlet concentration for these chambers under typical operating conditions. Additional contributions to the average concentration that are not accounted for by the plug flow analysis, include the contribution of

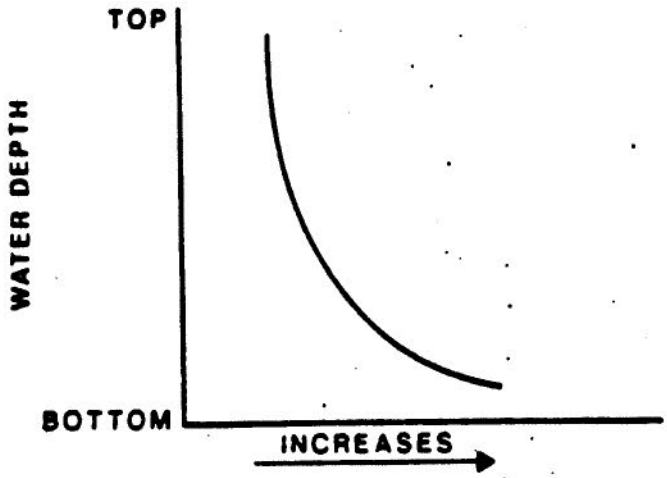

A. COUNTER-CURRENT FLOW PROFILE

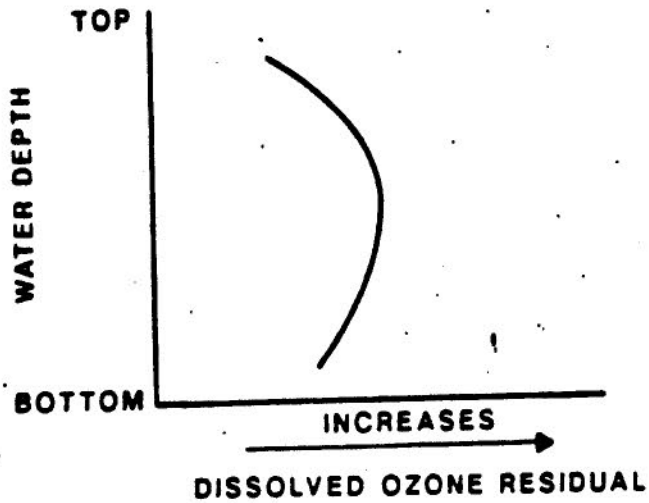

B. CO-CURRENT FLOW PROFILE

FIGURE 0-15 - OZONE CONCENTRATION PROFILES

turbulence and the contribution of the inlet concentration. Based on these considerations, EPA recommends the use of one-half the outlet concentration of ozone as an estimate for C.

The measurement of ozone concentration in the off gas is a possible alternative for determining the average ozone concentration although the correlations will be highly site specific. A procedure to develop site specific correlations between the average ozone concentration and the off-gas concentration is presented in Section 0.4.2.1.

Co-Current Flow

In co-current flow, both the water and gas flow in the same direction. The ozone concentration profile in co-current operation increases until it reaches a maximum and then decreases along the contact chamber as shown on Figure 0-15. The dissolved ozone concentration increases at the beginning of the column due to dominant mass transfer from the ozone rich bubbles. Then the gas phase becomes depleted of ozone and the impact of ozone consumption in the liquid phase dominates the ozone profile. C can be estimated as the concentration of dissolved ozone at the outlet or by the average of the inlet and outlet concentrations of dissolved ozone, whichever is higher. This estimate should still be conservative, particularly for systems exhibiting high transfer efficiencies.

The measurement of ozone concentration in the off gas is a possible alternative for determining the average ozone concentration although the correlations will be highly site specific. A procedure to develop site specific correlations between the average ozone concentration and the off-gas concentration is presented in Section 0.4.2.1.

Reactive Flow

In ozone chambers operated in a reactive flow configuration, the water contains dissolved ozone residual from previous chambers but no additional ozone is being introduced. Reactive flow chambers are used: for other disinfectants, such as chlorine, chlorine dioxide and chloramines; for the decay of ozone following a contactor or a static mixer; and for combining ozone with hydrogen peroxide.

For static mixers, the mixer acts as a turbine chamber with the pipeline following the mixer acting as the reactive chamber. The pipeline is in effect the second chamber and the guidelines in Table 0-6 apply for the determination of C. The contact time in the pipeline can be calculated by assuming plug flow.

In order to be consistent with the recommendations for monitoring other disinfectants in reactive flow chambers, and, in order to assure compliance under worst case conditions, the use of the residual outlet from the chamber (C_{out}) is recommended as a conservative measure of C. The CT for reactive flow chambers may be estimated by dividing the chamber into subunits, measuring the concentration at the end of each subunit, and adding the CT credits.

Estimates of C based on the outlet concentration were conservatively developed based on available test data. EPA's recommended values for C are summarized in Table 0-6. A system may choose to perform additional testing for direct measurement of ozone residuals to support a higher value, if appropriate. In addition, a reactive flow chamber may be subdivided into smaller units with ozone measurements at the end of each unit to improve CT credit.

0.3.4 Estimating C

The results of this section are summarized in Figure 0-16. The decision tree shows the applicable methods of estimating C for each flow configuration, and provides a quick means to compare alternatives and make a selection.

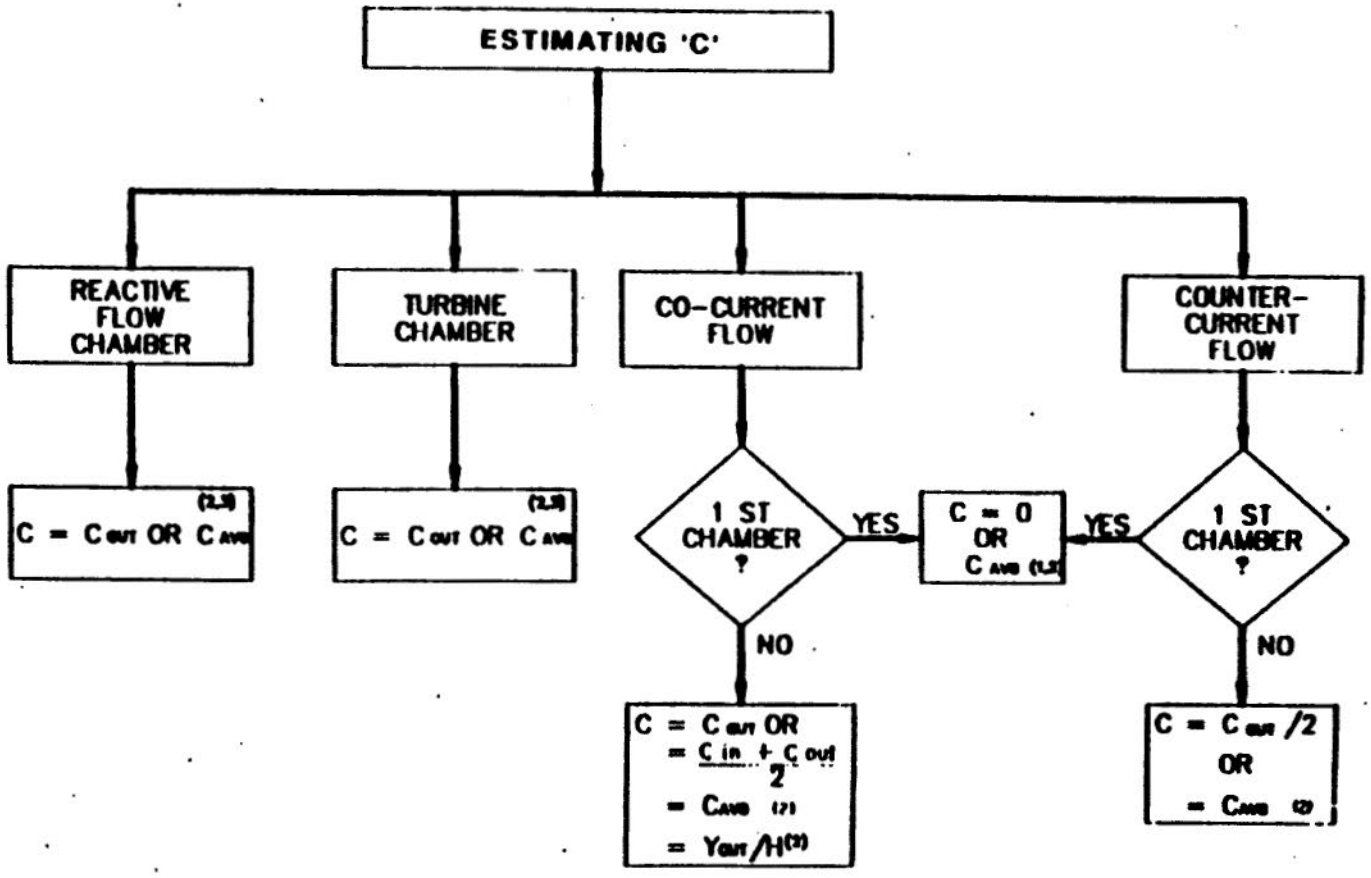

NOTES: 1. CREDIT FOR 1-log VIRUS WHEN C_{avr} > 0.1 mg/L
AND 0.5 -log GIARDIA INACTIVATION
WHEN C_{avr} > 0.3mg/L FOR FIRST CHAMBERS.

2. DETERMINATION OF C_{AVG} IN SECTION 0.3.2 AND Y_{OUT}/H IN SECTION 0.4.2

3. FOR FIRST OR SUBSEQUENT CHAMBERS.

FIGURE 0-16- DECISION TREE FOR ESTIMATING C

0.4 SITE-SPECIFIC EVALUATION OF OZONE CONTACTORS

0.4.1 Introduction

The second set of guidelines is designed to prevent systems from costly over-design and use of overdoses of ozone, by performing site specific characterization of their ozone contactors. This approach was partially utilized in the previous two sections by recommending a direct measurement of the ozone concentration profile and by allowing systems to use the SFA or CSTR approaches. In this section the site specific evaluation procedure will be further developed by presenting additional options to improve disinfection credits or simplify monitoring procedures. EPA recommends the following three alternatives for site specific evaluations:

- Estimating C by measurement of another variable
- Modeling performance of field scale operation
- Use of microbial indicator studies

C may be estimated by measuring an easily monitored (observable) variable. Systems should develop site specific correlations between C and another observable parameter such as the gas or liquid concentration exiting (C_{out}) the chamber and monitor this observable parameter instead of C. Guidelines to develop such site specific correlations are presented in Section 0.4.2

Modelling the performance of full scale operations is an alternative to the separate C and T approach. The first procedure separated the analysis into two separate issues related to determining C and T. Extensive modelling of the system may predict higher inactivation levels, even for the same C and T. EPA recommends that systems construct mathematical models of their ozone contactors to predict the disinfection performance, provided that the models are confirmed by experimental observation of the actual ozone concentration profile in the contact chambers, as discussed in Section 0.4.3.

Microbial indicator studies may be used to determine the inactivation of viruses and Giardia cysts in ozone contactors. EPA recommends that systems be allowed to evaluate the performance of their disinfection systems by spiking a pilot of the contactor with an indicator microorganism and predicting the actual inactivation of Giardia cysts and viruses

based on the inactivation of the indicator microorganisms. Guidelines to conduct such pilot scale performance evaluations are presented in Section 0.4.4.

0.4.2 Site Specific Correlation of C with an Observable Variable

Section 0.3 recommends determining the concentration of ozone in contactors by one of the following ways:

1. Measure the concentration profile in the chambers and determine the average dissolved ozone concentration for C.

2. Measure the dissolved concentration of ozone in the water outlet from each chamber (C_{out}) and estimate C by the correlations presented in Tables 0-6.

This section presents an alternative method to determine C.

The SWTR requires unfiltered systems to report a daily CT for their disinfection systems. Similar requirements may be specified by the Primacy Agency for filtered systems. Measuring the concentration in the ozone chambers each day may be difficult. Determining the ozone concentration in a chamber by continuous or daily measurements of other variables is probably preferable. Likewise, many systems may prefer to monitor the ozone concentration in the off gas (Y_{out}) or via the applied ozone dose rather than monitor C_{out}. However, based on available data, a non-site specific correlation between the average ozone concentration in the chamber and an observable variable other than C_{out} could not be developed.

EPA encourages systems to develop such site specific correlations and use them instead of the general procedures. These correlations may be developed in one of the following ways:

1. Determine site specific correlations between C_{out} and another variable that can be easily monitored. Measure the variable, estimate C_{out} and then use the correlations presented in Tables 0-6 to predict C.

2. Determine site specific correlations directly between C and another variable such as the ozone concentration in the off gas (Y_{out}) or C_{out}. Measure that variable and estimate C.

Correlations between C or C_{out} and a measurable parameter may vary in complexity from a simple empirical linear correlation to a highly sophisticated mathematical model accounting for the ozone concentration profile in the contact chamber. Development of appropriate correlations depends on the engineering capabilities of the utility. Therefore, EPA does not recommend any particular mathematical relationships. However, the following sections present guidelines to assist systems in developing appropriate correlations.

Correlations for Specific Chambers

The correlations should refer to a specific contact chamber and should be verified to fit the performance of this chamber. For example, a correlation for the first chamber should not be used to predict C in the second chamber of a multiple-chamber system.

Developing the Correlation

When fitting the correlation with experimental data, a record of the following variables should be kept:

a. Water flow rate

b. Gas flow rate

c. Ozone concentration in the gas feed

d. Ozone transfer efficiency

d. Water temperature and pH

e. Concentrations of all major inorganic reducing agents, if they constitute a substantial proportion of the total ozone demand, such as iron(II) and manganese, TOC, alkalinity and turbidity.

f. C_{out} or whatever is being correlated

g. The measurable variables such as ozone dosage or C_{out}

The system should also record the dependent (C or C_{out}) and independent measurable variables.

Application of the Correlation

The correlation should be evaluated with at least a 90 percent confidence level. Since confidence margins are very sensitive to the number of observations used to develop the relationship, this requirement will prevent the use of correlations that are based on a limited amount of observations. On the other hand, because systems usually make daily records of most of the parameters needed to develop a correlation, the number of observations will usually be very high, thereby, providing a high confidence level for the correlation. Simple procedures to determine confidence intervals are presented in statistical textbooks.

The correlation must be checked periodically, such as monthly, as an additional precaution against unexpected shifts in water conditions.

The correlation should be applied only to conditions that are within the parametric range for which the correlation was developed, as noted in the second guideline. Interpolation is permitted but extrapolation is not. Correlations developed during the winter time should not be used to evaluate performance in the summer.

EPA believes that by permitting such correlations, systems will be encouraged to apply sophisticated mathematical models in order to decrease the confidence interval and administer smaller doses of ozone. EPA also expects that systems will develop correlations between C in the contactors and measurable parameters to simplify their operations. Small or lesser equipped systems will then be able to use these relationships to estimate the performance of their ozone contactors. EPA intends to follow advances in this field and issue updated examples and guidelines regarding the selection of efficient site specific correlations.

0.4.2.1 Utilizing Off-Gas Measurements

In ozone contactors, the gas and liquid streams equilibrate when the contact between the gas and liquid is intimate enough and for sufficient time, otherwise the concentration in the water phase will be much lower than the equilibrium concentration. It can be assumed that close to equilibrium conditions are reached, when the transfer efficiency in the contactors is greater than 85 percent ($(Y_{in}-Y_{out})/Y_{in} > 0.85$). When the transfer efficiency is greater than 85 percent, systems may use solubility

constant data to calculate C_{out} from the contactor, based on the ozone concentration in the off gas. This may lead to a slight over estimate of the concentration in the liquid phase but this over estimate is justified, in view of the better reliability of gas phase measurements.

Henry's constants for ozone at various temperatures are presented in Table O-7. The residual concentration of ozone may be estimated by:

$$C_{out} = Y_{out}/H$$

Where:

Y_{out} = The concentration of ozone in the gas phase (ppm - volume or partial pressure-atm)

C_{out} = The concentration of ozone in the liquid phase (mg/L)

H = Henry's constant (atm/mg/L)

When applying off-gas modelling, liquid phase measurements must be made periodically to check the correlation, as the ozone transfer efficiency has a high impact on the results of this correlation.

Systems must be cautioned against the use of off-gas measurements for multiple chamber contactors with a common headspace. As noted previously, modelling must be specific to individual chambers. Thus, if a contactor has a common head space between chambers, no distinction can be made as to the concentration in each chamber. Therefore, off-gas measurements for modelling are recommended for use with single chamber contactors.

Example O.4-1

The Metropolitan Water District of Southern California conducted off-gas monitoring on a single chamber co-current flow pilot contactor to determine the dissolved ozone concentration:

- Operating conditions were as follows:
  - source water: Colorado River
  - feed gas ozone concentration = 2 percent by weight
  - off gas ozone concentration = 0.185 percent by weight (or 0.123 percent by volume)

- transfer efficiency = 90.8 percent
- temperature = 16.5 C
- observed ozone residual = 1.04 mg/L
- Henry's constant 16.5°C = 0.001179 atm/mg/L

- The ozone residual estimated from the off gas concentration is:

$$C_{out}=Y_{out}/H = 0.00123/0.001179 = 1.04 \text{ mg/L}$$

- The measured residual is the same as that predicted by the off-gas measurement indicating that this approach is appropriate for this system.

Example 0.4-2 Empirical Correlation between C_{out} and Y_{out}

A system using two counter-current contact chambers in series wants to predict C_{out} in the second chamber by the concentration of ozone in the off-gas (Y_{out}). Daily observations of the pertinent parameters during the first month of operation are presented in Table 0-8.

- The system chose to correlate C_{out} and Y_{out} by linear empirical correlation.
- The daily observations, and the best linear fit are presented in Figure 0-17.
- The 90 percent confidence interval is presented by the lower line in Figure 0-17.
- The system may use the 90 percent confidence level line to estimate C_{out} based on measurements of Y_{out}.
- For example when Y_{out} = 0.4 percent then the system may use C_{out} = 0.36 mg/L.
- Although the best estimate is C_{out} = 0.4 mg/L, the system should predict C_{out} = 0.36 mg/L.
- Now, according to Table 0-6, the system may predict C using the recommended guideline of $C = C_{out}/2 = (0.36)/2 = 0.18$ mg/L.
- The system measures the ozone concentration at the chamber outlet monthly, to check the model correlation.

TABLE O-7

HENRY'S CONSTANTS FOR OZONE[1]

Water Temperature (°C)	Henry's Constant atm/Mole Fraction	Henry's Constant (atm/mg/l ozone)
0	1,940	0.00073
5	2,180	0.00082
10	2,480	0.00093
15	2,880	0.00108
20	3,760	0.00141
25	4,570	0.00171
30	5,980	0.00224

NOTE: [1] EPA, 1986

TABLE O-8

Empirical Correlation
Between C_{out} and Y_{out}

Y_{out}	C_{out}	COD	Temp. °C	Y_{in}%
0.5	0.5	2.0	20	2.0
0.47	0.43	2.8	15	2.0
0.38	0.41	2.5	17	2.0
0.39	0.4	2.3	18	2.0
0.28	0.32	2.4	18	2.0
0.2	0.17	2.6	20	2.0
0.25	0.23	2.0	20	2.0
0.32	0.27	2.0	21	1.9
0.29	0.27	2.0	18	1.9
0.2	0.18	2.0	17	2.0
0.22	0.2	1.9	18	2.1
0.30	0.33	1.8	20	2.0
0.32	0.34	1.9	17	2.0
0.28	0.27	1.9	18	1.8
0.29	0.32	2.5	18	1.9
0.4	0.42	2.4	19	1.9
0.47	0.45	2.3	19	1.8
0.35	0.37	2.4	21	1.9
0.30	0.29	1.9	19	1.8
0.20	0.17	1.9	19	1.8
0.15	1.19	2.0	19	2.0
0.12	0.20	1.9	17	2.0
0.17	0.17	1.9	19	1.9
0.14	0.16	2.0	19	2.0
0.13	0.12	1.9	18	2.0
0.25	0.27	1.9	17	2.0
0.29	0.32	1.9	18	2.1
0.30	0.29	1.8	17	2.0
0.22	0.20	1.9	17	2.0
0.22	0.20	1.9	18	1.9

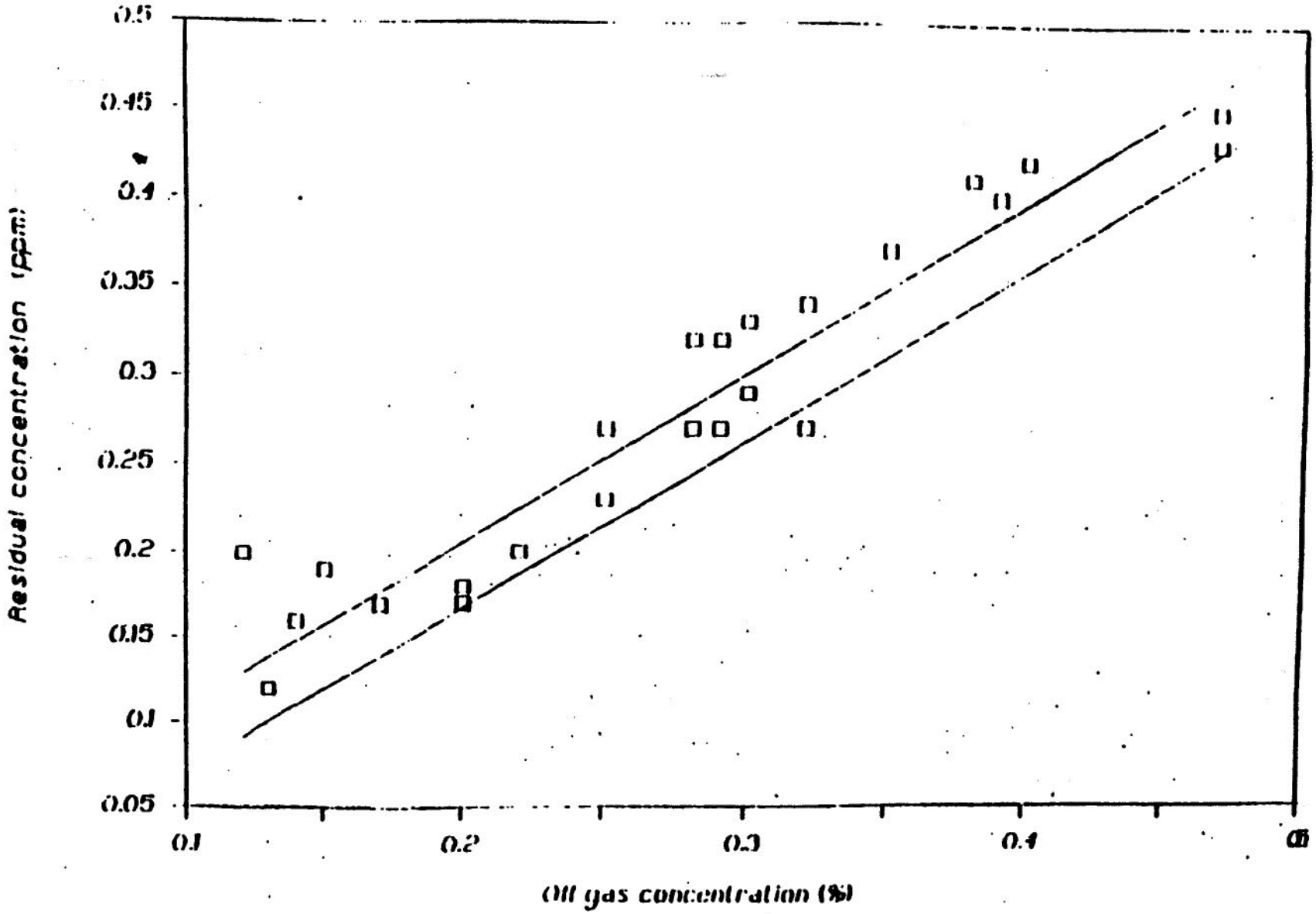

FIGURE 0-17 - EXAMPLE OF EMPIRICAL CORRELATION OF RESIDUAL OZONE AND OFF GAS

- If this system had the means to monitor the concentration profile in the contactor and determine C directly it could develop a correlation between C and Y_{out} instead of using Table 0-6.

0.4.3 Modeling the Performance of Full Scale Operations

More extensive site specific mathematical modelling of the actual performance of the ozone contactor may determine higher inactivation levels than those determined by the separate C and T approach. Therefore, systems should be allowed to use such advanced modelling, provided that these models are confirmed by direct measurement of the dissolved ozone profile in the contactor. Only after the model is confirmed to correctly estimate the concentration profile in the contactor can it be used to estimate the inactivation performance of the contactor. Systems with multiple chamber contactors must develop models for each of the chambers.

Various types of mathematical models for reaction-diffusion systems were reported (Danckwerts, 1976) and some were shown to be applicable for ozone contactors (Gurol and Singer, 1982). This section deliberately avoids giving preference to any type of mathematical modelling in order to encourage engineering innovations. The guidelines presented below may help systems to select appropriate modelling that will be consistent with the requirements of the SWTR.

The model should account for the ozone demand of the water being treated in the contactor. The rate of ozone reaction and decomposition should be based on batch experiments, on-site pilot plant columns, or full-scale measurements.

The model should represent the actual flow distribution in the ozone contact chambers by incorporating a dispersion term and/or a three dimensional velocity distribution term in the contactor.

The modelled profile of the concentration of dissolved ozone in the contactor should fit the actual distribution of dissolved ozone, as verified by direct measurements, with a variation of less than 10 to 20 percent. This difference between the model and measured residual allows for the inherent inaccuracies in measuring the actual ozone residual. The mathematically modelled concentration profile should not be used without comparing it with actual measurements. Even elaborate mathematical models

are not considered reliable enough to estimate the concentration distributions of dissolved gasses in complex gas/liquid operations, without additional verification of the actual concentration profile in the contactor.

In addition to the above guidelines, the model may also account for other phenomena that may affect the performance of the ozone contact chambers, such as: the effects of varying bubble diameter during its movement through the contactor, the effect of stagnant regions in the contactor and the variation of the hydrostatic pressure.

For example, a system may use the two film theory coupled with reaction kinetics to estimate the performance of an ozone contact chamber. Using the two film theory the relevant differential equations are:

$$L\ dC/dz = Mt + Mr + Md$$

$$G\ dy/dz = Mt$$

$$L\ dI/dz = Md - KCI$$

Where:

C = Concentration of dissolved ozone (mg/L)

G = Gas flow rate per cross section of the contactor (m^2.Kg gas/min)

I = Concentration of the target microorganism (Giardia or viruses)

L = Water flow rate per cross section area of the reactor (Kg water/min.m^2)

y = Concentration of ozone in the gas phase (mg/L)

z = Length coordinate of the contactor

Mt = An expression for ozone transfer from the bubble phase to the water phase. For example, $k_l a(C_i-C)$ where $k_l a$ stands for the volumetric mass transfer coefficient, C_i represents the interfacial concentration of ozone, given by solubility data (Table O-10).

Mr = An expression for the rate of ozone consumption in the water due to auto-decomposition and the ozone demand of the treated water. For example, $Mr= k_1C - k_2(C)(R)$. Where k_1 and k_2 are kinetic coefficients, and R represents the variable ozone demand, such as TOC. An additional equation may be required to represent the variation of R along the contactor.

Md = An expression for the dispersion by turbulence and bubble flow of dissolved ozone in the specific contactor. For example, Dd^2C/dz^2 the dispersion coefficient (D) may be evaluated by analysis of tracer study data. The third equation describing the microorganism concentration (dI/dz) should incorporate the same dispersion coefficient (D).

KCI= Chick's inactivation term (K=2.303k, where k = Chick-Watson's inactivation coefficient presented in Table O-4, C represents the local concentration of ozone and I represents the concentration of microorganisms).

The validity of these equations is subject to the appropriate boundary conditions at the bottom and top of the contactor. The signs of the various terms depend on the definition of coordinates and the type of flow configuration (co-current or counter-current flow configuration).

O.4.4 Microbial Indicator Studies to Model Inactivation Contactors

According to the recommendations in Appendix G, systems may demonstrate the actual performance of a disinfection system rather than rely on the CT approach. The procedures outlined in Appendix G recommend the use of Giardia muris cysts as indicators of Giardia inactivation and bacteriophage (MS2) as indicators for virus inactivation by disinfection in general. However, recent data indicate that MS2 phages may be substantially more sensitive to ozone disinfection than pathogenic viruses, and therefore are not a good indicator for determining adequate ozonation conditions for inactivating pathogenic viruses (Finch, 1990). Additional research is needed to determine which coliphage species, if any, can be used as an appropriate indicator for virus inactivation by ozone. Pilot scale inactivation experiments using appropriate indicator microorganisms can serve as powerful tools to indicate the performance of the ozone contactors. This section contains guidelines for conducting indicator studies. At this time, full-scale testing with indicator organisms is not feasible because of the high volume of organisms needed and the concern for introducing organisms into the finished water. However, with the development of naturally occurring indicators such as resistant species of coliphage, demonstration on the full-scale level may be feasible in the future.

Systems may determine the performance of their disinfection basins by demonstrating levels of inactivation of indicator microorganisms such as Giardia muris cysts, or other indicator microorganisms provided that such demonstrations are based on solid engineering principles. The following steps can be used for conducting indicator studies:

1. Batch Experiments

On-site batch disinfection experiments are recommended with treated water spiked with indicator microorganisms to determine the inactivation kinetics of the indicator used in the pilot scale experiments. Microorganisms should be used as indicators preferably in the range where the inactivation kinetics approximate Chick's law. This protocol assumes that within the desired inactivation range, the inactivation kinetics will approximate Chick's law. It is important to note that other disinfection kinetic models, not yet apparent, may be developed to more accurately predict ozone inactivation efficiency than the Chick-Watson model. Evidence that other models may be more appropriate is shown with data generated by several researchers for different organisms (Wolfe, R.L. et al, 1989; Finch G., et al 1988; Finch G. and Smith, D.W. 1989).

2. Pilot Scale Indicator Experiments

Pilot-scale experiments should then be conducted using identical strains of biological indicators to those used in the batch experiments. The pilot-scale experiments should be repeated under identical gas and water flow conditions with and without introducing ozone into the gas stream. The actual performance may then be calculated by subtracting the inactivation achieved in the control experiment (without ozone) from the inactivation achieved in the ozone disinfection experiments.

3. Evaluation of Inactivation Performances

Systems may choose direct or indirect methods to interpret the inactivation performance of ozone contactors based on indicator studies. The direct method is more conservative and simple while the indirect method is more accurate but requires mathematical modelling of the contactors. The two procedures are outlined below:

1. Direct prediction of inactivation performance

a. Determine k_i (where k_i is Chick-Watson's inactivation coefficient of the indicator microorganism) from batch test data with the expression:

$$\log(I/I_0)_{indicator} = -k_i Ct$$

where:

$(I/I_0)_{indicator}$ = Survival ratio of indicator microorganism as determined by batch experiments.

C = Dissolved ozone concentration in the batch experiment (mg/L)

t = time (minutes) elapsed from the beginning of the batch experiment

Note: This assumes that the inactivation data will provide a reasonable fit for this equation. If this is not true, then the following is not applicable and other relationships should be developed.

b. Determine the disinfection performance of the pilot scale disinfection system on the indicator microorganism $(I/I_0)_{indicator}$.

c. Calculate the inactivation of Giardia cysts or viruses (I/I_0) using the appropriate k' values from Table 0-3:

$$\log(I/I_0) = \log(I/I_0)_{indicator} (k'/k_i) \quad @ \ (ki > k) \qquad (7)$$

$$\log (I/IO) = \log (I/I_0)_{indicator} \ (ki < k) \qquad (8)$$

This equation still represents an approximation because it neglects dispersion effects. The laws used in deriving the above equations are based on conservative similarity approaches. When the indicator microorganism is less resistant to ozone disinfection than the target organism ($k_i > k$), then the plug flow operation represents the more conservative prediction approach. Equation 7 is based on the assumption that the flow configuration in the chamber approaches plug flow. When the indicator microorganism is more vulnerable then the target microorganism ($k_i > k$) then the CSTR approach provides a more conservative estimate. Equation 4 represents a conservative approximation to the CSTR similarity

rule. A more accurate determination of the inactivation performance of the contactor may be calculated by the following approach:

2. Indirect determination of the disinfection performance

a. Determine k_i (where k_i is Chick-Watson's inactivation coefficient of the indicator microorganism) from batch test data with the expression:

$$\log(I/I_0)_{indicator} = -k_i Ct$$

where:

$(I/I_0)_{indicator}$ = Survival ratio of indicator micro-organisms as determined by batch experiments.

C = Dissolved ozone concentration in the batch experiment (mg/L)

t = time (minutes) elapsed from the beginning of the batch experiment

b. Determine the disinfection performance of the pilot scale inactivation level of the indicator microorganism $(I/I_0)_{indicator}$.

c. Determine the actual concentration profile in the disinfection chamber (see Section 0.3.2).

d. Construct a mathematical model that estimates the concentration profile in the contactor as discussed in Section 0.4.3

e. Confirm the mathematical model by fitting its parameters such as dispersion or kinetic coefficients to describe accurately the concentration profile of ozone in the contactor and the overall inactivation of the indicator microorganism. A model that predicts within 10-20 percent the inactivation of the indicator microorganism and the concentration profile of dissolved ozone in the contactor would be considered to be valid and can be used by incorporating k values from Table 0-3 to estimate the inactivation of Giardia cysts or viruses in the contactor.

Printed on Recycled Paper

REFERENCES

Bader, H. and J. Hoigne, Determination of Ozone in Water by the Indigo Method, A Submitted Standard Method, Ozone: Science and Engineering, pp 449-456, 1982, 4

Carns, K, Design of East Bay Municipal Utility District ozone disinfection plants in Oakland Ca., presented at EPA workshop on Ozone CT, Cincinnati, OH., Feb. 1990

Chick, H., An investigation of the laws of disinfection, J. Hygiene, 8, 92 (1908)

Danckwerts, P.V. Gas Liquid Reactions, McGraw Hill Inc. (1976)

Finch, G.R., Smith, D.W., Stiles, M.E., Dose Response of Escherichia Coli in Ozone Demand-free Phosphate Buffer, Water Research Vol. 22, No.12, pp. 1563-1570, 1988.

Finch, G., University of Alberta, Canada, Private Communication (1990).

Hoff, J. C., Strengths and weaknesses of using CT values to evaluate disinfection practice, in assurance of adequate disinfection, or C-T or not C-T, AWWA seminar proceedings, Annual AWWA Conference, Kansas City, pp. 9 (1987)

Gurol M.D. and P.C. Singer, Kinetics of ozone decomposition, A dynamic approach, Env. Sci. & Tech., 16, 377 (1982)

Joost, R.D., L.A. Jackson and L.J. Bollyky, Optimization of ozone contactors for drinking water disinfection, Proceedings of the 9th Ozone World Congress, L.J. Bollyky, Editor, New York, NY, vol 1, pp. 551 (1989).

Lev, O. and S. Regli, Compliance of ozone disinfection systems with the Surface Water Treatment Rule, Selection of characteristic exposure time (T), submitted to J. of Env. Eng. ASCE (1990a)

Lev, O. and S. Regli, Compliance of ozone disinfection systems with the Surface Water Treatment Rule, Selection of characteristic concentration (C), submitted to J. of Env. Eng. ASCE (1990b)

Levenspiel, O., Chemical Reaction Engineering, 2nd ed. Wiley, New York, NY (1972).

Perry R.H., Perry's Chemical Engineering Handbook, McGraw Hill Book Company, New York, NY (1963)

Richards, D. A. and Fleischman, M., Ozone transfer to aqueous systems in a static mixer, 2nd Symposium on ozone technology, Montreal, Canada, R. G. Rice, P. Pichet and M. A. Vincent, eds, p. 57 (1975).

Printed on Recycled Paper

Rice, R. EPA, in preparation, Source Document: Ozone Treatment of Drinking Water, EPA/625/1-86/021.

Rosenbeck, G.L, McMahon Associates, Inc., Private communication (1989)

Schwartz, B., Hackensack Water Company, Private communication (1989)

Schwartz, B., L.C. Fung and C. N. Weng, Determination of ozone concentration in turbine contactor, presented at EPA Workshop on Ozone CT, Cincinnati, OH., Feb. 1990

Seinfeld J. H. and Lapidus L., Mathematical methods in Chemical Engineering, Vol. 3, Process Modeling Estimation and Identification, Prentice Hall Inc. (1984).

Stolarik, G.L. and J. D. Christie, Projection of ozone C-T values, Los Angeles Aqueduct Filtration Plant, presented at Int. Ozone Assoc. Conf. Monroe, Mich., April 1987.

Stolarik, G.L. and J. D. Christie, Projection of ozone C-T values, Los Angeles Aqueduct Filtration Plant, presented at EPA workshop on Ozone CT, Cincinnati, OH., Feb. 1990

Treybal, R.E., Mass-transfer operations, McGraw-Hill Book Company, 3rd ed. (1980)

Watson, H.E., A note on the variation of the rate of disinfection with change in the concentration of the disinfectant, J. Hygiene, 8, 536 (1908)

Wolfe, R.L, M.H. Stewart, K.N. Scott and M. J. McGuire, Inactivation of Giardia Muris and indicator organisms seeded in surface water supplies by peroxone and ozone, Env. Sci. and Tech., 23, 744 (1989)

Yuteri C. and Gurol M.D. Evaluation of kinetic parameters for the ozonation of organic micropollutants, Wat. Sci. & Tech. 21, 465 (1989)

Printed on Recycled Paper

APPENDIX A.5

Additional Rules Governing Surface Water Treatment Facilities, US Environmental Protection Agency

APPENDIX A.6

Stormwater Pollution Prevention Plan for Grand Canyon National Airport, October 2017

\\Ewloffice\ewl\EWL Projects\2017-0803 - GCN Water Use Study & Drainage MP\ACAD\Plans\FIG - 6.2.2.dwg, 4/6/2018 4:52:17 PM, AutoCAD PDF (High Quality Print)

FIGURE 6.2.2
ORIGINAL PROCESS FLOW DIAGRAM

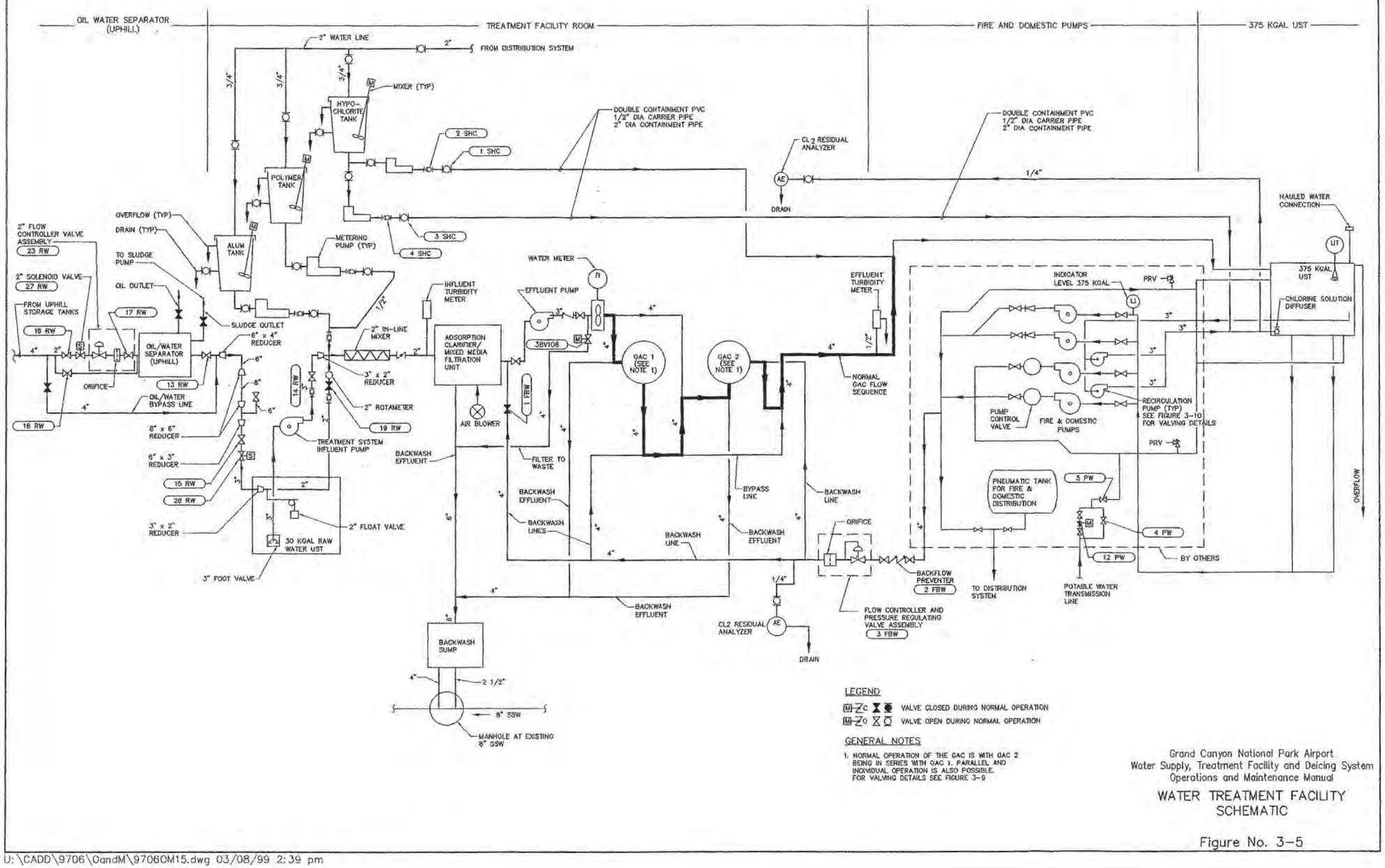

ENGINEERED LAYTON WITH
N. EMERY LAYTON, PE
480.616.0011

Appendix B

Field Photography Records

Drainage Infrastructure

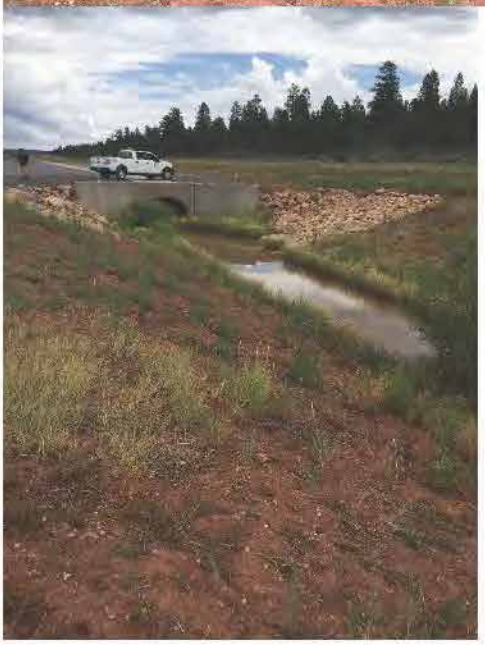

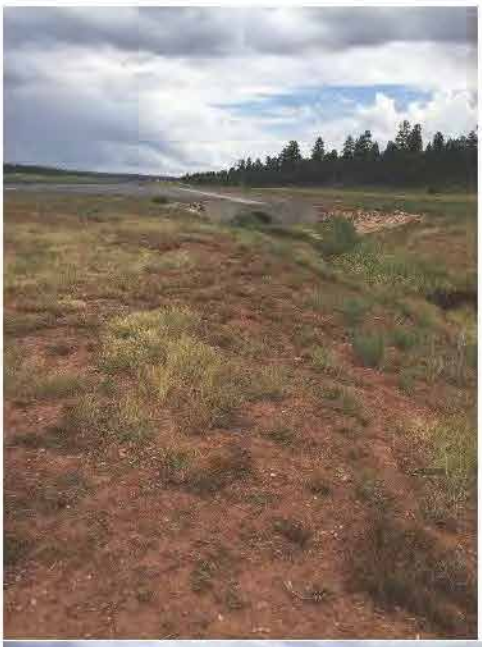

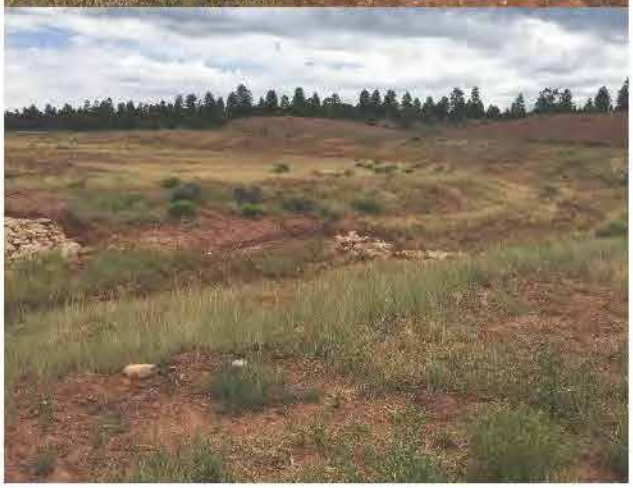

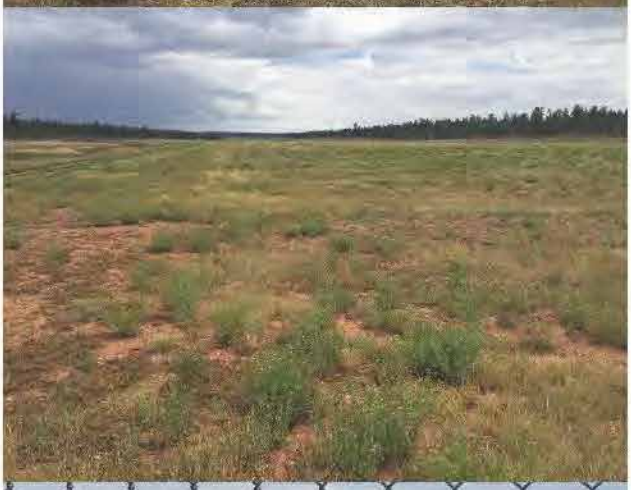

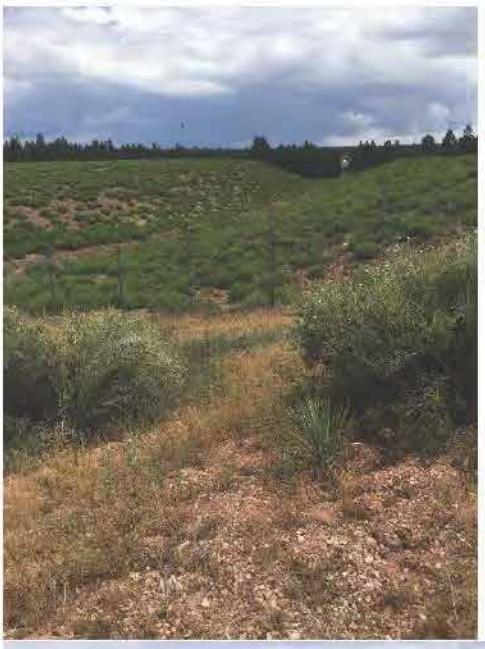

Water System Infrastructure

GUARD IT

CATCH BASIN PUMP
OFF

LEESON
CATALOG NO-801086.00
MODEL- 254TTDX7620AA
CUST. PART NO-
DATE-F04L
ENC.- DP
MOTOR THERMALLY PROTECTED

CRANE DEMING PUMPS
Salem, Ohio 44460 U.S.A.
30813401
DC-905646
GPM
RPM

HACH
CL17

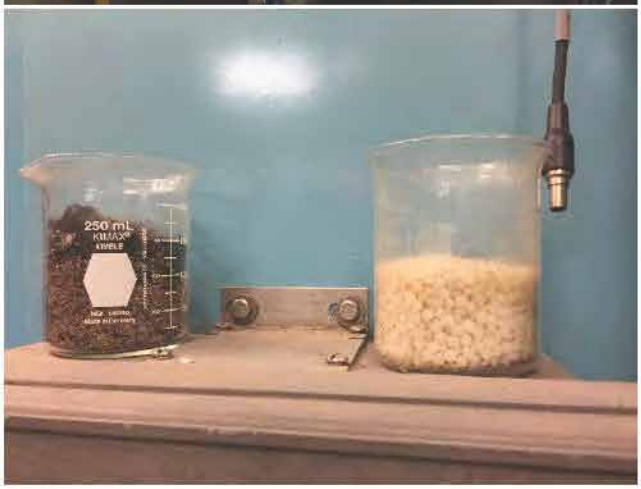
250 mL

FINISH EFFLUENT

HACH
CL17
CHLORINE
ANALYZER
375 K
RECIAC

U.S. FILTER
WPC

PanelMate

U.S.FILTER

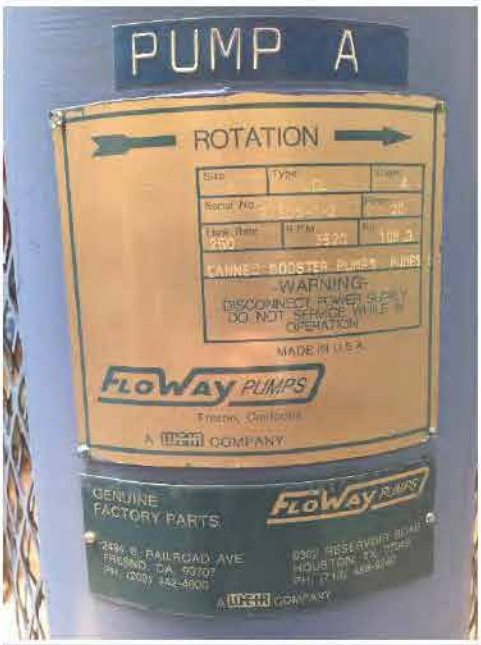
PUMP A
ROTATION
WARNING-
DISCONNECT POWER SUPPLY
DO NOT SERVICE WHILE IN
OPERATION
MADE IN U.S.A.
FLOWAY PUMPS
Fresno, California
A WEIR COMPANY
GENUINE
FACTORY PARTS
FLOWAY PUMPS
2494 S. RAILROAD AVE.
FRESNO, CA. 93707
8302 RESERVOIR ROAD
HOUSTON, TX. 77049
PH. (713) 458-8240
A WEIR COMPANY

MOV CONTROLS
VALVE OPENED
VALVE CLOSED
MANUAL AUTO
OPEN CLOSED

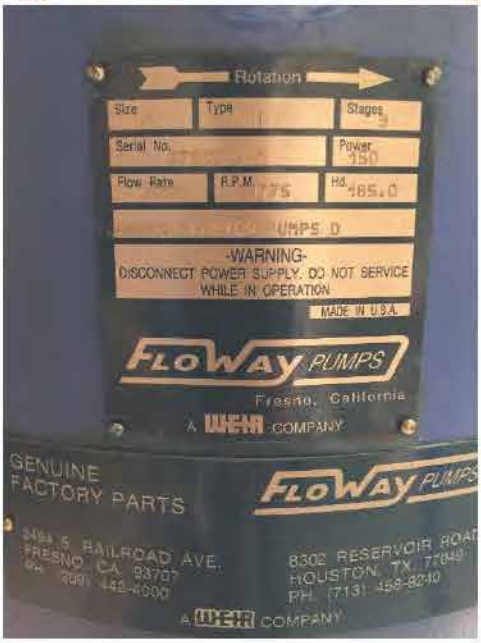
Rotation
Size
Type
Stages
Serial No.
Power
150
Flow Rate
R.P.M.
1775
Hd.
185.0
-WARNING-
DISCONNECT POWER SUPPLY. DO NOT SERVICE
WHILE IN OPERATION
MADE IN U.S.A.
FLOWAY PUMPS
Fresno, California
A WEIR COMPANY
GENUINE
FACTORY PARTS
FLOWAY PUMPS
2494 S. RAILROAD AVE.
FRESNO, CA. 93707
8302 RESERVOIR ROAD
HOUSTON, TX. 77049
PH. (713) 458-8240
A WEIR COMPANY

AIRANGER
SPL
SmartLinx

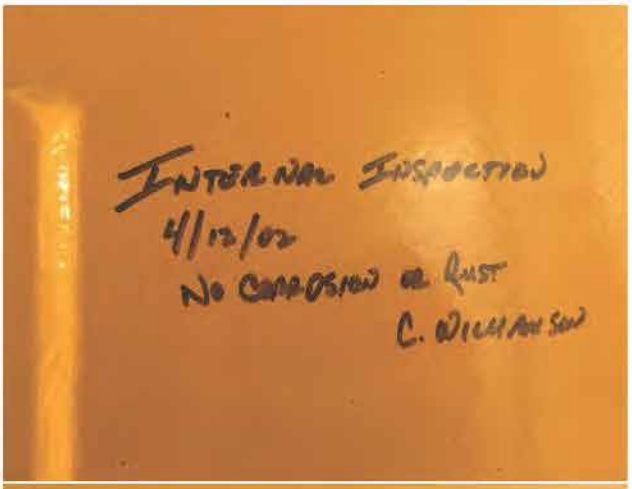
INTERNAL INSPECTION
4/12/02
NO CORROSION OR RUST
C. WILLIAMSON

certified by
Bulldog Steel Products Inc.
150 psi at 100 F
(max. allowable working pressure)
-20 F at 150 psi
(min. design metal temperature)
heads 7/16" shell
Serial Number 0859747B
Year Built 1997
CLYDE, TX 79510

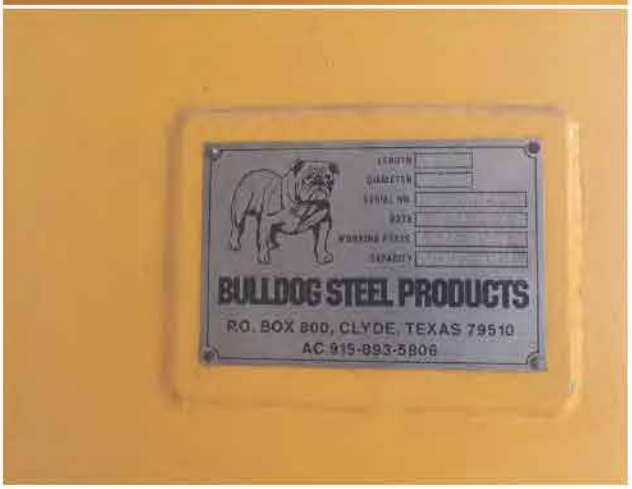
BULLDOG STEEL PRODUCTS
P.O. BOX 800, CLYDE, TEXAS 79510
AC 915-893-5806

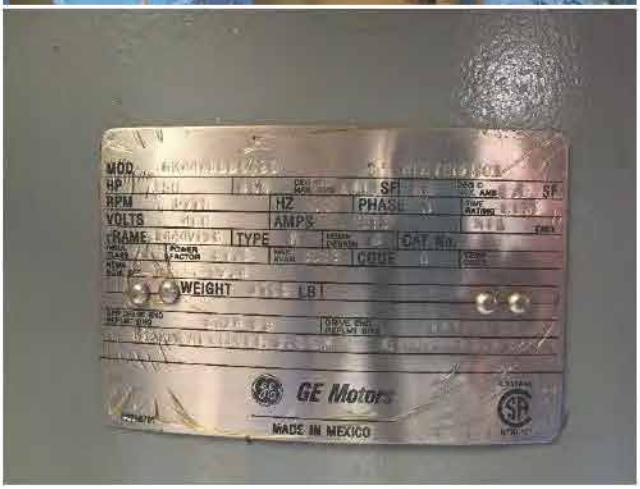
MOD
HP
SF
RPM
HZ
PHASE
VOLTS
AMPS
FRAME
TYPE
CAT. No.
CODE
WEIGHT
LBS
GE Motors
MADE IN MEXICO

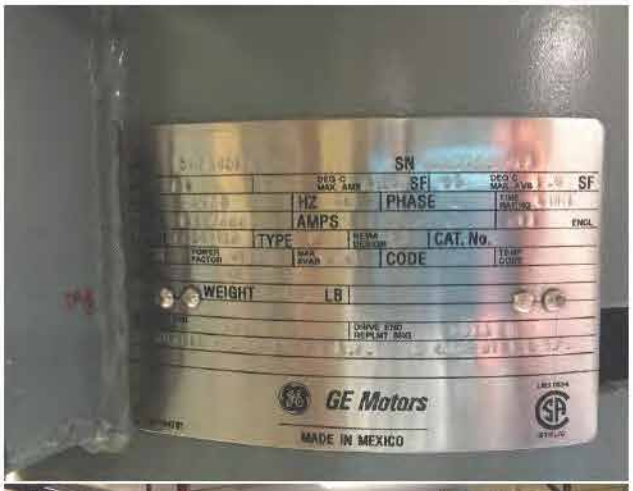
SN
SF
SF
HZ
PHASE
AMPS
TYPE
CAT. No.
CODE
WEIGHT
LB
GE Motors
MADE IN MEXICO

Appendix C

Hydrologic/Hydraulic Analysis Support Documentation

APPENDIX C.1 – C.3

(On Compact Disk)

APPENDIX C.4

FLO-2D Modeling Results Maps

Grand Canyon Airport Drainage Plan and Water Use Study

Airport Model Domain

1-year 24-hour Storm Event

Existing Conditions

Legend

- Study Location
- FP Cross-section Peak Discharge (cfs)

Max. Combined Discharge (cfs)

- 0 - 1
- 1 - 2
- 2 - 5
- 5 - 10
- 10 - 15
- 15 - 20
- 20 - 25
- 25 - 30
- 30 - 50
- 50 - 100
- > 100

VICINITY MAP

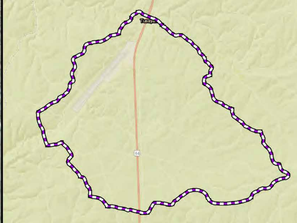

0 0.25 0.5 Miles

N

HELM
14040 N Cave Creek Road #104
Phoenix, AZ 85022

ADOT

Grand Canyon Airport Drainage Plan and Water Use Study

Airport Model Domain

1-year 24-hour Storm Event

Existing Conditions

Legend

- Study Location
- FP Cross-section Peak Discharge (cfs)

Max. Flow Depth (ft)

- 0 - 0.1
- 0.1 - 0.2
- 0.2 - 0.5
- 0.5 - 0.75
- 0.75 - 1
- 1 - 2
- 2 - 3
- 3 - 5
- 5 - 10
- 10 - 15
- > 15

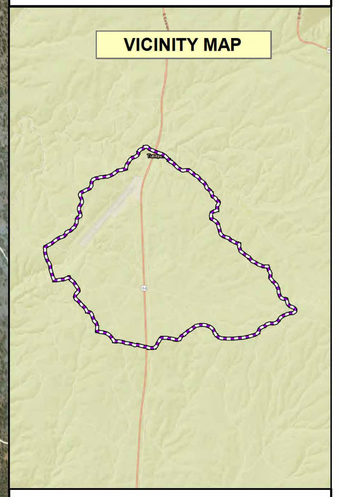

0 0.25 0.5 Miles

N

HELM
14040 N Cave Creek Road #104
Phoenix, AZ 85022

ADOT

Grand Canyon Airport Drainage Plan and Water Use Study

Airport Model Domain

1-year 24-hour Storm Event

Existing Conditions

Legend

- Study Location
- FP Cross-section Peak Discharge (cfs)

Max. Flow Velocity

- 0 - 0.1
- 0.1 - 0.5
- 0.5 - 1
- 1 - 2
- 2 - 3
- 3 - 5
- 5 - 7.5
- 7.5 - 10
- 10 - 15
- 15 - 20
- > 20

VICINITY MAP

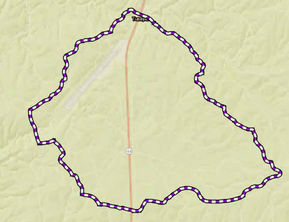

0 0.25 0.5 Miles

N

HELM
14040 N Cave Creek Road #104
Phoenix, AZ 85022

ADOT

Grand Canyon Airport Drainage Plan and Water Use Study

Airport Model Domain

2-year 24-hour Storm Event

Existing Conditions

Legend

- Study Location
- FP Cross-section Peak Discharge (cfs)

Max. Combined Discharge (cfs)

- 0 - 1
- 1 - 2
- 2 - 5
- 5 - 10
- 10 - 15
- 15 - 20
- 20 - 25
- 25 - 30
- 30 - 50
- 50 - 100
- > 100

VICINITY MAP

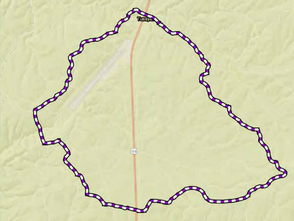

0 0.25 0.5 Miles

N

HELM
14040 N Cave Creek Road #104
Phoenix, AZ 85022

ADOT

Grand Canyon Airport Drainage Plan and Water Use Study

Airport Model Domain

2-year 24-hour Storm Event

Existing Conditions

Legend

- Study Location
- FP Cross-section Peak Discharge (cfs)

Max. Flow Depth (ft)

- 0 - 0.1
- 0.1 - 0.2
- 0.2 - 0.5
- 0.5 - 0.75
- 0.75 - 1
- 1 - 2
- 2 - 3
- 3 - 5
- 5 - 10
- 10 - 15
- > 15

VICINITY MAP

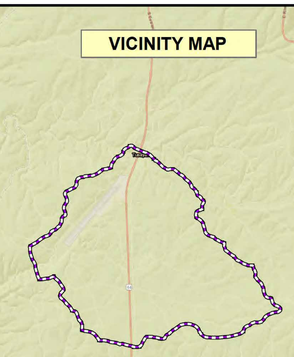

0 0.25 0.5 Miles

N

HELM
14040 N Cave Creek Road #104
Phoenix, AZ 85022

ADOT

Grand Canyon Airport Drainage Plan and Water Use Study

Airport Model Domain

2-year 24-hour Storm Event

Existing Conditions

Legend

- Study Location
- FP Cross-section Peak Discharge (cfs)

Max. Flow Velocity

- 0 - 0.1
- 0.1 - 0.5
- 0.5 - 1
- 1 - 2
- 2 - 3
- 3 - 5
- 5 - 7.5
- 7.5 - 10
- 10 - 15
- 15 - 20
- > 20

VICINITY MAP

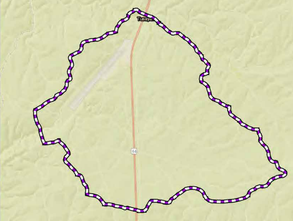

0 0.25 0.5 Miles

N

HELM
14040 N Cave Creek Road #104
Phoenix, AZ 85022

ADOT

Grand Canyon Airport Drainage Plan and Water Use Study

Airport Model Domain

5-year 24-hour Storm Event

Existing Conditions

Legend

- Study Location
- FP Cross-section Peak Discharge (cfs)

Max. Combined Discharge (cfs)

- 0 - 1
- 1 - 2
- 2 - 5
- 5 - 10
- 10 - 15
- 15 - 20
- 20 - 25
- 25 - 30
- 30 - 50
- 50 - 100
- > 100

VICINITY MAP

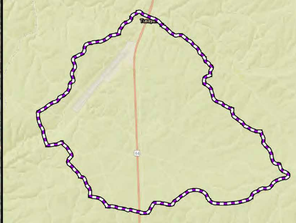

0 0.25 0.5 Miles

N

HELM
14040 N Cave Creek Road #104
Phoenix, AZ 85022

ADOT

Grand Canyon Airport Drainage Plan and Water Use Study

Airport Model Domain

5-year 24-hour Storm Event

Existing Conditions

Legend

- Study Location
- FP Cross-section Peak Discharge (cfs)

Max. Flow Depth (ft)

- 0 - 0.1
- 0.1 - 0.2
- 0.2 - 0.5
- 0.5 - 0.75
- 0.75 - 1
- 1 - 2
- 2 - 3
- 3 - 5
- 5 - 10
- 10 - 15
- > 15

VICINITY MAP

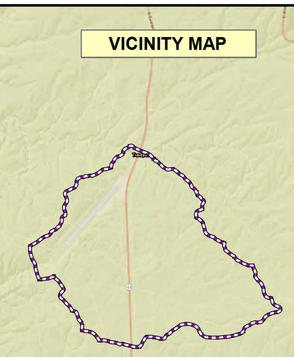

0 0.25 0.5 Miles

N

HELM
14040 N Cave Creek Road #104
Phoenix, AZ 85022

ADOT

Grand Canyon Airport Drainage Plan and Water Use Study

Airport Model Domain

5-year 24-hour Storm Event

Existing Conditions

Legend

- Study Location
- FP Cross-section Peak Discharge (cfs)

Max. Flow Velocity

- 0 - 0.1
- 0.1 - 0.5
- 0.5 - 1
- 1 - 2
- 2 - 3
- 3 - 5
- 5 - 7.5
- 7.5 - 10
- 10 - 15
- 15 - 20
- > 20

VICINITY MAP

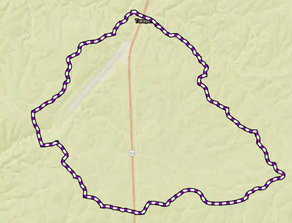

0 0.25 0.5
Miles

N

HELM
14040 N Cave Creek Road #104
Phoenix, AZ 85022

ADOT

Grand Canyon Airport Drainage Plan and Water Use Study

Airport Model Domain

10-year 24-hour Storm Event

Existing Conditions

Legend

- Study Location
- FP Cross-section Peak Discharge (cfs)

Max. Combined Discharge (cfs)

- 0 - 1
- 1 - 2
- 2 - 5
- 5 - 10
- 10 - 15
- 15 - 20
- 20 - 25
- 25 - 30
- 30 - 50
- 50 - 100
- > 100

VICINITY MAP

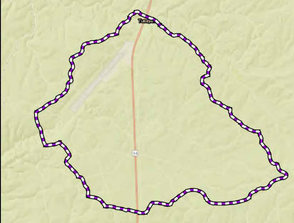

0 0.25 0.5 Miles

N

HELM
14040 N Cave Creek Road #104
Phoenix, AZ 85022

ADOT

Grand Canyon Airport Drainage Plan and Water Use Study

Airport Model Domain

10-year 24-hour Storm Event

Existing Conditions

Legend

- Study Location
- FP Cross-section Peak Discharge (cfs)

Max. Flow Depth (ft)

- 0 - 0.1
- 0.1 - 0.2
- 0.2 - 0.5
- 0.5 - 0.75
- 0.75 - 1
- 1 - 2
- 2 - 3
- 3 - 5
- 5 - 10
- 10 - 15
- > 15

VICINITY MAP

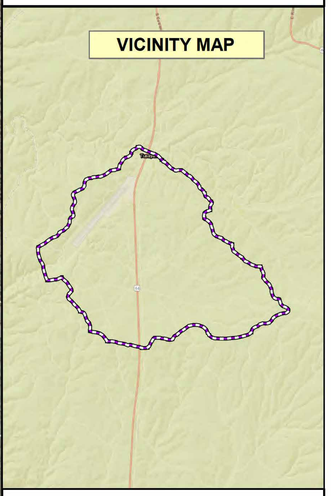

0 0.25 0.5 Miles

N

HELM
14040 N Cave Creek Road #104
Phoenix, AZ 85022

ADOT

Grand Canyon Airport Drainage Plan and Water Use Study

Airport Model Domain

10-year 24-hour Storm Event

Existing Conditions

Legend

- Study Location
- FP Cross-section Peak Discharge (cfs)

Max. Flow Velocity

- 0 - 0.1
- 0.1 - 0.5
- 0.5 - 1
- 1 - 2
- 2 - 3
- 3 - 5
- 5 - 7.5
- 7.5 - 10
- 10 - 15
- 15 - 20
- > 20

VICINITY MAP

0 0.25 0.5 Miles

N

HELM
14040 N Cave Creek Road #104
Phoenix, AZ 85022

ADOT

Grand Canyon Airport Drainage Plan and Water Use Study

Airport Model Domain

50-year 24-hour Storm Event

Existing Conditions

Legend

- Study Location
- FP Cross-section Peak Discharge (cfs)

Max. Combined Discharge (cfs)

- 0 - 1
- 1 - 2
- 2 - 5
- 5 - 10
- 10 - 15
- 15 - 20
- 20 - 25
- 25 - 30
- 30 - 50
- 50 - 100
- > 100

VICINITY MAP

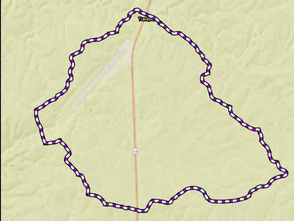

0 0.25 0.5 Miles

N

HELM
14040 N Cave Creek Road #104
Phoenix, AZ 85022

ADOT

Grand Canyon Airport Drainage Plan and Water Use Study

Airport Model Domain

50-year 24-hour Storm Event

Existing Conditions

Legend

- Study Location
- FP Cross-section Peak Discharge (cfs)

Max. Flow Depth

(ft)

- 0 - 0.1
- 0.1 - 0.2
- 0.2 - 0.5
- 0.5 - 0.75
- 0.75 - 1
- 1 - 2
- 2 - 3
- 3 - 5
- 5 - 10
- 10 - 15
- > 15

VICINITY MAP

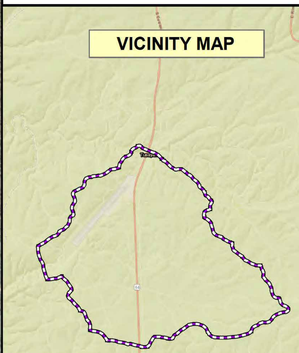

0 0.25 0.5 Miles

N

HELM
14040 N Cave Creek Road #104
Phoenix, AZ 85022

ADOT

Grand Canyon Airport Drainage Plan and Water Use Study

Airport Model Domain

50-year 24-hour Storm Event

Existing Conditions

Legend

- Study Location
- FP Cross-section Peak Discharge (cfs)

Max. Flow Velocity

- 0 - 0.1
- 0.1 - 0.5
- 0.5 - 1
- 1 - 2
- 2 - 3
- 3 - 5
- 5 - 7.5
- 7.5 - 10
- 10 - 15
- 15 - 20
- > 20

VICINITY MAP

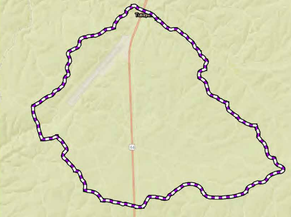

0 0.25 0.5 Miles

N

HELM
14040 N Cave Creek Road #104
Phoenix, AZ 85022

ADOT

Grand Canyon Airport Drainage Plan and Water Use Study

Airport Model Domain

100-year 24-hour Storm Event

Existing Conditions

Legend

- Study Location
- FP Cross-section Peak Discharge (cfs)

Max. Combined Discharge (cfs)

- 0 - 1
- 1 - 2
- 2 - 5
- 5 - 10
- 10 - 15
- 15 - 20
- 20 - 25
- 25 - 30
- 30 - 50
- 50 - 100
- > 100

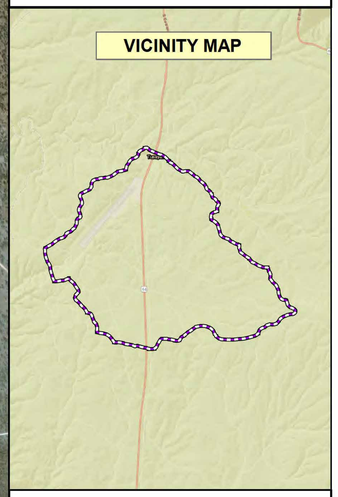

0 0.25 0.5 Miles

N

HELM
14040 N Cave Creek Road #104
Phoenix, AZ 85022

ADOT

Grand Canyon Airport Drainage Plan and Water Use Study

Airport Model Domain

100-year 24-hour Storm Event

Existing Conditions

Legend

- Study Location
- FP Cross-section Peak Discharge (cfs)

Max. Flow Depth

(ft)

- 0 - 0.1
- 0.1 - 0.2
- 0.2 - 0.5
- 0.5 - 0.75
- 0.75 - 1
- 1 - 2
- 2 - 3
- 3 - 5
- 5 - 10
- 10 - 15
- > 15

VICINITY MAP

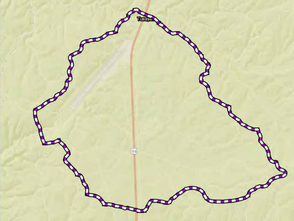

0 0.25 0.5 Miles

N

HELM
14040 N Cave Creek Road #104
Phoenix, AZ 85022

ADOT

Grand Canyon Airport Drainage Plan and Water Use Study

Airport Model Domain

100-year 24-hour Storm Event

Existing Conditions

Legend

- Study Location
- FP Cross-section Peak Discharge (cfs)

Max. Flow Velocity

- 0 - 0.1
- 0.1 - 0.5
- 0.5 - 1
- 1 - 2
- 2 - 3
- 3 - 5
- 5 - 7.5
- 7.5 - 10
- 10 - 15
- 15 - 20
- > 20

VICINITY MAP

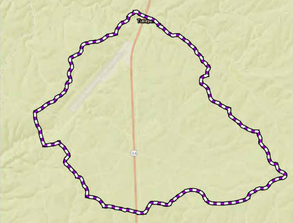

0 0.25 0.5 Miles

N

HELM
14040 N Cave Creek Road #104
Phoenix, AZ 85022

ADOT

APPENDIX C.5

Water Rights Adjudication Memorandum, March 8, 2018

Date: March 5, 2018

To: Bob Haneline, PE, LEED AP
Water Practice Leader, Vice President
Dibble Engineering
7878 North 16th Street, Suite 300
Phoenix, AZ 85020

From: Nolie Templeton, PhD
Water Resources
Holistic Engineering and Land Management, Inc. (HELM)
14040 North Cave Creek Road, Suite 104
Phoenix, AZ 85022

Re: Drainage Master Plan and Water Use Study at the Grand Canyon National Park Airport: Water Rights Adjudication

Dear Mr. Haneline:

In regard to the above referenced project, HELM has prepared this memorandum to address water rights adjudication for the Grand Canyon National Park Airport. The following summarizes the contents of this memorandum:

- Executive Summary
- Introduction
- Water Right Filing Location
- Water Rights
- Rainwater Harvesting
- Conclusions
- References
- Appendices

If you have any questions or require additional information, please feel free to contact me at your earliest convenience.

Sincerely,

Nolie Templeton

Nolie Templeton, Ph.D.

DRAFT

Executive Summary

The Grand Canyon National Park Airport (GCN) is owned and operated by the Arizona Department of Transportation (ADOT). The GCN Drainage Master Plan will identify opportunities to divert, store, and effectively use stormwater as a potable water resource for future airport development. Thus, it is vital to understand current water rights adjudication for GCN.

As this memo will show, ADOT owns the surface water rights of, and all water that flows to, Rain Tank, a small reservoir located at both the outfall of the GCN watershed and the southwest end of the GCN runway. ADOT obtained these rights through an assignment to Claim Number 36-65512 from Marvin R. Hatch.[1] The quantity of water assigned to this claim is 7,678.78 acre-feet per year and the priority date is recorded as 8/23/1895.

A much smaller surface water claim exists for Gregg Gibbons on the Rain Tank Overflow Dam Reservoir (Claim Number 38-15265), which is located adjacent to Rain Tank. The quantity of water assigned to this claim is 1.2 acre-feet per year, with a priority date of 12/31/1960.

A description of both rights is summarized in a letter dated May 26, 1994 from a Deputy Council of Arizona Department of Water Resources (ADWR) to an Assistant Attorney General for the State.[1,2] The key excerpt from the letter is as follows:

> *"By a joint letter dated April 29, 1994, you and Mr. Sullivan (attorney for Mr. Hatch) advised the Director (of ADWR) that ADOT now has all rights to the water flowing to Rain Tank, subject to the rights of Greg Gibbons, dba 10x Ranch. By virtue of the settlement, the joint letter indicated that Mr. Hatch has assigned to ADOT his rights under Statement of Claim no. 36-65512 and application no. 33-78591."*

The priority dates are important to note because Claim Number 36-65512 would be considered the senior water right with respect to the Gibbons claim because of the earlier (older) priority date. The memo further details the history of surface water rights at GCN and clarifies how the surface water right appropriations have evolved.

Another potential source of stormwater collection at GCN is rainwater harvesting, which is legal in the State of Arizona. Rainwater is not appropriable before it reaches a channel; therefore, its harvesting would not encroach on any existing surface water right appropriations.

Key documents from ADWR imaged records are included in the appendices.

Introduction

The Grand Canyon National Park Airport (GCN) is owned and administered by the Arizona Department of Transportation (ADOT) and is the only State-owned airport in Arizona. It is an important contributor to the development of the surrounding regions, including providing access to the Grand Canyon National Park (GCNP), and is located seven miles from the South Rim and two miles from the GCNP entrance.

In November 2015, the State hired Coffman Associates to perform a two-year study to develop a Master Plan for future airport development. The Master Plan recommends a more extensive evaluation of potential water source improvements to determine the most effective way for GCN to continue to be sensitive to water use, due to water scarcity in the region, with potential improvements that are proposed in the Master Plan Concept through the long-term planning period. The average total annual water use at GCN for 2014 and 2015 was 2,621,623 gallons (8.05 acre feet)[3]. GCN previously had a self-contained rainwater containment system with a 3.175 million-gallon capacity. The system was removed due to its location within the runway safety area, which is against Federal Aviation Administration (FAA) regulations[4]. ADOT has applied for and received a grant from the FAA to perform a Drainage Master Plan (DMP) and Water Use Study.

One goal of the DMP is to enhance the development of airport facilities, and evaluate water use to look at how to divert, store, and use water on airport property to more effectively use water resources. To determine how much water is available for collection, it is necessary to understand water rights adjudication for GCN and the watershed upstream of GCN. The purpose of this memo is to outline current water rights with respect to surface water and rainwater harvesting.

Water Right Filing Location

GCN is located in Tusayan, Arizona in Coconino County and is bounded by the Kaibab National Forest to the west, south, and east (Figure 1). To determine existing surface water appropriations, ADWR has an online data portal where users can search by parcel for existing surface water certificates and application numbers. Township 30N, Range 2E, Section 34 is of particular importance as it contains Rain Tank, a reservoir that is located on the southwest end of the GCN runway and at the outfall of the GCN watershed. Existing water rights within the GCN watershed are associated with that section since Rain Tank is the outfall. Searches on the ADWR website were performed for other sections encompassing GCN, however all surface water rights for the area are listed in the Section 34 query.

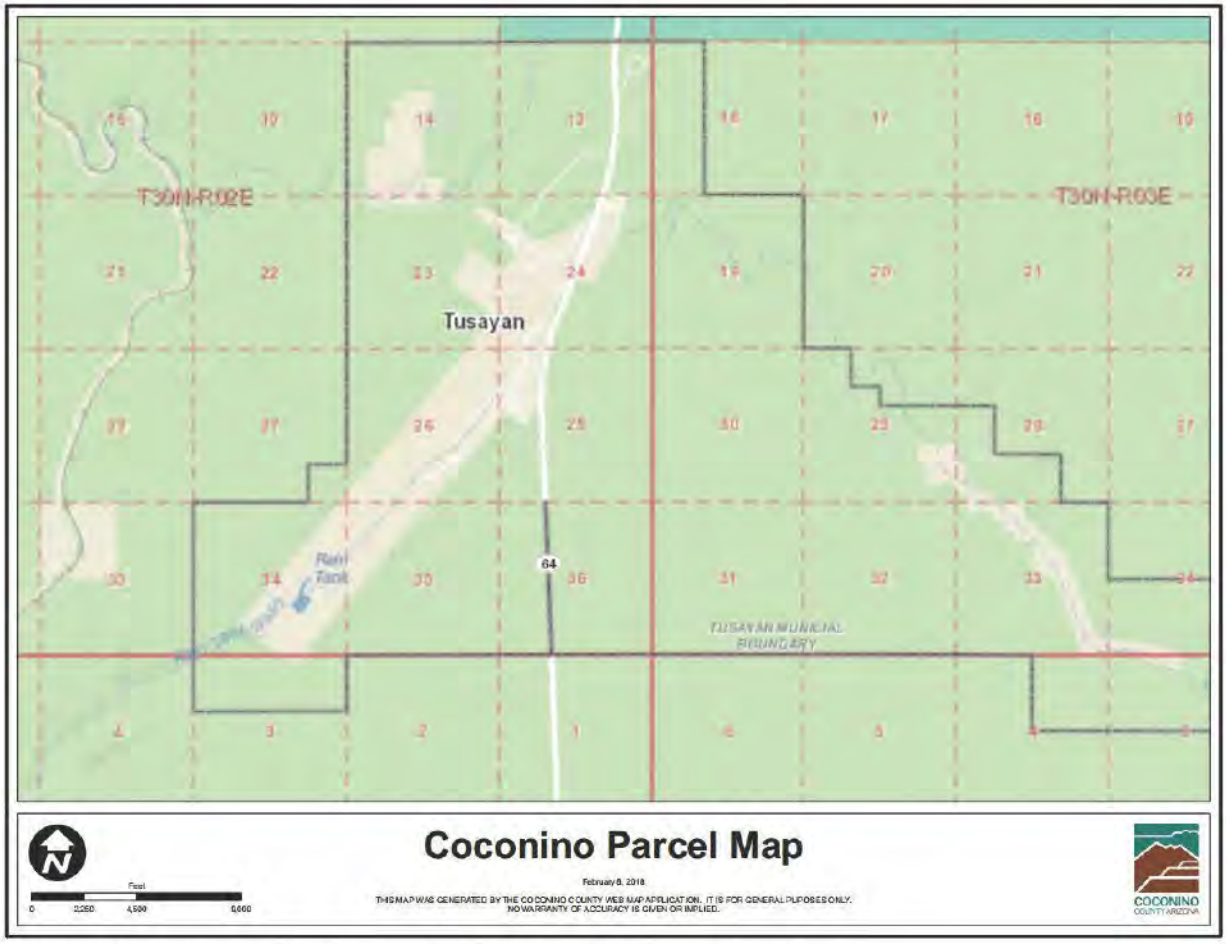

Figure 1: Parcel numbers encompassing GCN and surrounding area.

Water Rights

In Arizona, allocation of surface water is determined by the "doctrine of prior appropriation." An appropriation is made when a party physically diverts or removes water from a stream and puts that water to some type of beneficial use.[5,6] Those who put the water to use first are senior water rights holders and those who come later hold junior rights. If a junior user is upstream from a senior user, the junior user must leave enough water in the stream to fulfill the senior user's rights. The senior user has the first right to all allocated water, whether upstream or downstream from the junior user.[5,6]

Upon querying Township 30N, Range 2E, Section 34 on the ADWR online portal,[7] six active filings for surface water rights are listed and summarized in Table 1 below. The 'Status' column is based on a decision made by the ADWR director in 1988, which will be further described. 'Seniority' is determined from the 'Priority Date' recorded.

Name	Item	Application/ Claim No.	File Date	Priority Date	Total Quantity	Status[1] (Seniority)
ADOT	1	33-49610.0[8]	11/22/1977	11/22/1977	0.00 AFA	Denied
	2	33-87231.0[9]	12/3/1981	12/3/1981	0.00 AFA	Denied
Gregg L. Gibbons, dba 10x Ranch	3	38-15265.0[10]	6/18/1979	12/31/1960	1.20 AFA	Existing (Junior)
	4	3R-2782.0[11]	4/19/1972	4/19/1972	2.40 AFA	Denied
Marvin R. Hatch & Della	5	36-65512.0[1]	5/31/1978	8/23/1895	7,678.78 AFA	Existing (Senior)
Hatch; Adams; Hogle	6	33-78591.0[2]	7/2/1979	7/2/1979	7,678.78 AFA	Denied

Table 1: Summary of existing water rights actively filed, including application/claim numbers, file date, priority date, total quantity allocated, current status, and water right seniority for existing rights for T30N R2E Section 34.

In summary, the parties listed in Table 1 filed surface water right claims in the late 1970's to early 1980's. All parties contested one another's claims, which led to a scheduled hearing on February 9, 1988, before Hearing Officer Herb Dishlip of ADWR. The Hearing Officer submitted Findings of Fact, Conclusions of Law and Decision to the Director of ADWR (Appendix A).[10] The key facts are summarized below:

1. On file at ADWR is a Statement of Claim of Right to Use Public Waters of the State No. 36-65512, which was filed by Globe Development in 1978 pursuant to A.R.S. $45-182. This filing claims the right to use all of the waters of Rain Tank Wash. According to this Statement of Claim, the legal basis for that claim was a "Water Location Notice" dated December 20, 1913, which declares that William Babbitt "located and appropriated" for "all of the useful and beneficial purposes" "all of the unappropriated surplus and flood waters" "from all of the watershed, gulches, ravines, canyons, and draw" which drain into "[t]hat certain dam and reservoir known as 'Rain Tanks'." Located in Coconino County, State of Arizona.
2. There was no rebuttal to the "Water Location Notice" of 1913.

Decisions from the hearing are as follows:

1. Statement of Claim No. 36-65512 dates back to at least 1913 and claims the right to appropriate all waters which flow into the Rain Tank Dam Reservoir. Under A.R.S. $45-185(A), it is presumed to be true and accurate. Thus Application Nos. 33-87231, 33-78591, 33-49610, and R-2782 conflict with those vested rights, and must be denied.
2. Pursuant to Title 45, Chapter 1, Article 10, Arizona Revised Statutes, a possible conflict with prior vested rights is not a relevant factor in the consideration of a claim to a water right in a stockpond which meets the criteria set forth in A.R.S. $45-272.
3. Application No. 38-15265 for a water right in a stockpond meets the criteria set forth in A.R.S. $45-272(A), thus Gibbons is entitled to a stockpond water right in the Rain Tank Overflow Dam Reservoir with a priority date of 1960.

The Findings of Fact, Conclusions of Law and Decision were accepted by the Director of ADWR, as referenced in an order dated June 28, 1988 (Appendix B).[11] Thus, Claim No. 36-65512 was determined to be the water rights holder for all flows into Rain Tank and Rain Tank itself with a right of 7,678.78 AFA (acre feet per year). Claim No. 38-15265 (Gregg L. Gibbons) was given a certified water right of 1.2 AFA in the Rain Tank Overflow Dam Reservoir, because it was found that, "A possible conflict with prior vested rights is not a relevant factor in the consideration of a claim to a water right in a stockpond…"[10] (Appendix A). Figure 2 provides clarification as to what reservoir the Gibbons claim refers to, drawn from ADWR field investigation notes submitted prior to the hearing in 1988 (Appendix C).[10]

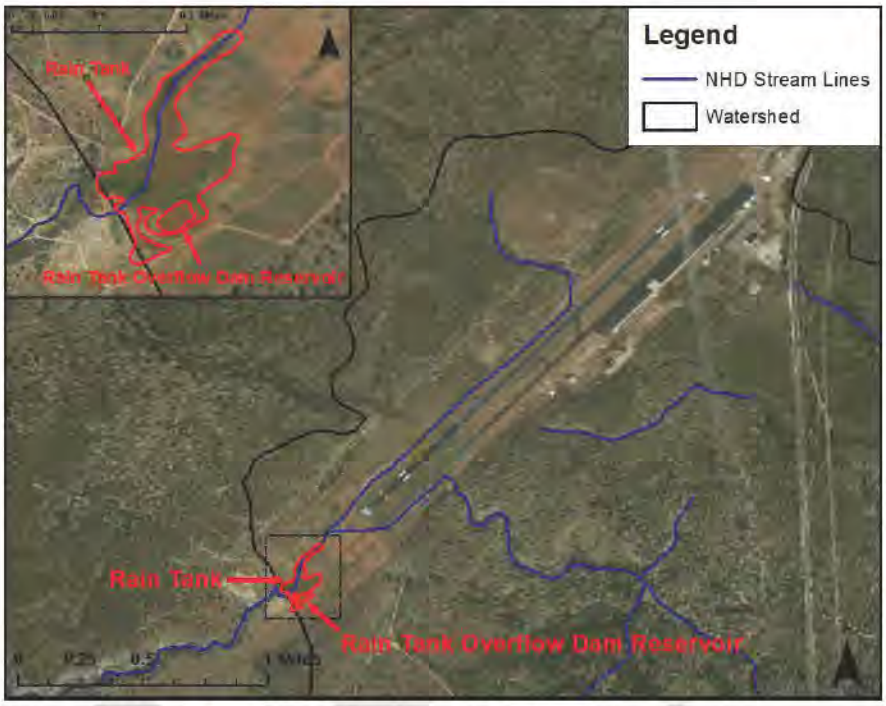

Figure 2: Location of Rain Tank and Rain Tank Overflow Dam Reservoir.

The Application for Assignment (essentially transfer of water rights) for Claim No. 36-65512 from Globe Development to Marvin R. Hatch was filed with and approved by ADWR on March 13, 1986.[1] A document to clarify the water rights under Claim No. 36-65512 was filed with ADWR on September 30, 1990, and states, "The purposes, extent of uses and quantity of water used are hereby clarified and amended to provide that the claimant claims the uses and amounts of water set forth in the 1913 Water Certificate, that is, all water that flows into Rain Tank, for all useful and beneficial purposes."[1] This is important because it clarifies that all water that flows into Rain Tank, in addition to Rain Tank, is appropriated under Claim No. 36-65512.

A letter from the Deputy Counsel of ADWR, Janet L. Ronald, to Joe Acosta, Jr., Assistant Attorney General of the State of Arizona, dated May 26, 1994 and on file with ADWR, states that ADOT and Mr. Hatch had settled the Rain Tank case in a letter dated April 11, 1994 (Appendix D). In a joint letter dated April 29, 1994, the Director of ADWR was advised that ADOT now has all rights to the water flowing to Rain Tank, subject to the rights of Greg Gibbons, dba 10x Ranch (which is in reference to the 1.20 AFA under Claim No. 38-15265). An Application of Assignment was then filed on June 1, 1994 transferring the water rights to Claim No. 36-65512 from Marvin R. Hatch to ADOT,[1,2] and is signed by both parties (Appendix E).

Rainwater Harvesting

Arizona is a rainwater harvesting friendly state from a legal perspective.[5] Passive or active rainwater harvesting may procure precipitation before it reaches a "natural channel," and

therefore the water is not considered appropriable (A.R.S. §45-141(A)). This includes capturing water from rooftops, landscaped yards, and artificial impermeable surfaces.[5] In fact, ADOT applied for the appropriation of rainfall and snowfall on paved areas of Grand Canyon Airport in 1981 (Application No. 33-49609). The application was denied on the basis that the water is classified as diffuse surface water and is not appropriable. The denial decision detailed, "It is evident that waters sought to be appropriated in this application are diffuse surface waters, and as such are not subject to appropriation, until and unless such waters make their way into one of the bodies of water or water courses enumerated in A.R.S. §45-141(A). Even then, a third-party appropriator of such waters may not compel the owner of the land upon which the diffuse surface water originates to continue to allow such waters to reach the appropriable body of water or water course."[1] Therefore, it is determined that rainwater harvesting at GCN will not pose a legal problem.

Conclusions

The development of the Grand Canyon National Park Airport is vital to meet the needs of existing and future users and is an important contributor to the development of the surrounding regions. Historically, airport management has been sensitive to the amount of water being consumed at GCN. Water harvesting may be a key aspect to increase availability of water to serve GCN. Thus, it is important to understand the rainwater and surface water adjudication for GCN and surrounding areas.

Surface water rights at GCN have a long legal history. Ultimately, in 1994 ADOT obtained surface water Claim Number 36-65512 from Marvin R. Hatch, which claims rights to Rain Tank and all water that flows to Rain Tank, recorded as 7,678.78 acre-feet per year. This surface water volume is much greater than the current annual water use at the airport (8.05 acre-feet).

In addition to the ADOT surface water right, there is an existing water right to Rain Tank Overflow Dam Reservoir for 1.20 acre-feet annually under Claim Number 38-15265, which is important to keep note of with respect to design considerations.

Rainwater harvesting is legal and encouraged in the state of Arizona and Coconino county. Rainwater is not appropriable before it reaches a channel; therefore, its harvesting would not encroach on any existing surface water right appropriations.

References

1. Arizona Department of Water Resources, Imaged Records, Application Number 36-65512.0: https://infoshare.azwater.gov/docushare/dsweb/Get/SWDoc-51842/1eaX.PDF.
2. Arizona Department of Water Resources, Imaged Records, Application Number 33-78591.0: https://infoshare.azwater.gov/docushare/dsweb/Get/SWDoc-2723/0718X.PDF.
3. Grand Canyon National Park Airport Master Plan Draft, Appendix C: Energy Audit Report, https://www.azdot.gov/planning/transportation-studies/grand-canyon-national-park-airport-master-plan-study/draft-airport-master-plan-documents.
4. Grand Canyon National Park Airport Master Plan Draft, Chapter 7: Sustainability, https://www.azdot.gov/planning/transportation-studies/grand-canyon-national-park-airport-master-plan-study/draft-airport-master-plan-documents.
5. Gaston, Todd L., (2010), *Rainwater Harvesting in the Southwestern United States: A policy review of the Four Corners states*. University of Arizona, Water Resources Research Center.

6. "Layperson's Guide to Arizona Water," Water Education Foundation and The University of Arizona's Water Resources Research Center, (2007). ISBN: 1-893246-22-1.
7. Arizona Department of Water Resources Surface Water Database, Surface Water Report by Township, Range and Section, https://infoshare.azwater.gov/docushare/dsweb/View/Collection-86.
8. Arizona Department of Water Resources, Imaged Records, Application Number 33-49610.0: https://infoshare.azwater.gov/docushare/dsweb/Get/SWDoc-2165/Final104eaX.PDF.
9. Arizona Department of Water Resources, Imaged Records, Application Number 33-87231.0: https://infoshare.azwater.gov/docushare/dsweb/Get/SWDoc-3085/Final10882X.PDF.
10. Arizona Department of Water Resources, Imaged Records, Application Number 38-15265.0: https://infoshare.azwater.gov/docushare/dsweb/Get/SWDoc-9517/0a19X.PDF.
11. Arizona Department of Water Resources, Imaged Records, Application Number 3R-2782.0: https://infoshare.azwater.gov/docushare/dsweb/Get/SWDoc-28914/0788X.PDF.

DRAFT

Appendix A

ADWR Hearing Officer's Proposed Findings of Fact, Conclusions of Law and Decisions, June 24, 1988

DRAFT

ARIZONA DEPARTMENT OF WATER RESOURCES

BEFORE THE DIRECTOR

IN THE MATTER OF THE APPLICATION TO APPROPRIATE PUBLIC WATERS OF THE STATE OF ARIZONA APPLICATION NOS. R-2782; 33-49609; 33-49610; 33-78591; 33-87231 APPLICANTS: Gregg L. Gibbons (R-2782); Arizona Department of Transportation (33-49609; 33-49610; 33-87231); Delmar L. Adams, Marvin R. Hatch, H. B. Hogle (33-78591) SOURCE: On the Colorado River Watershed PROTESTANTS: State of Arizona; Arizona Department of Transportation; Gregg L. Gibbons; Globe Development Company; Marvin R. Hatch	HEARING OFFICER'S PROPOSED FINDINGS OF FACT, CONCLUSIONS OF LAW AND DECISION
IN THE MATTER OF THE APPLICATION FOR CERTIFICATION OF WATER RIGHT FOR A STOCK POND. APPLICATION NO. 38-15265. APPLICANT: Gregg L. Gibbons DBA 10X RANCH SOURCE: Rain Tank Wash, on the Colorado River Watershed	

Currently pending before the Department of Water Resources are a number of applications to appropriate waters near the Grand Canyon Airport in Coconino County, Arizona. These applications seek water rights in two catchment basins located near the runway of the airport. One basin, which impounds the

waters which flow in a channel known as Rain Tank Wash, is referred to as the Rain Tank Dam Reservoir. The second basin impounds overflow waters from the Rain Tank Dam and is referred to as the Rain Tank Overflow Dam Reservoir.

These applications have been consolidated for consideration. On February 9, 1988, oral argument was held in Phoenix before Hearing Officer Herb Dishlip concerning a number of motions made by the parties. After reviewing the entire record, the Hearing Officer hereby submits to the Director of the Department of Water Resources the following Findings of Fact, Conclusions of Law and Decision.

FINDINGS OF FACT

1. The Arizona Department of Transportation ("ADOT") seeks to appropriate for domestic and municipal use a maximum of 63 acre-feet of water per year by capturing rainfall and snowfall on the paved areas of Grand Canyon Airport. See Amended Application No. 33-49609.

2. ADOT seeks to appropriate for domestic and municipal use a maximum of 63 acre-feet per year of the waters of the Rain Tank Overflow Dam Reservoir. See Amended Application No. 33-49610.

3. ADOT seeks to appropriate for domestic and municipal use a maximum of 63 acre-feet per year of the waters of the Rain Tank Dam Reservoir. See Amended Application No. 33-87231.

4. Marvin Hatch, D. L. Adams and H. B. Hoyle (collectively, "Hatch") seek to appropriate for domestic, irrigation and stock use 7678.78 acre-feet per year of the waters of Rain Tank Wash. See Amended Application No. 33-78591.

5. In 1972, Gregg L. Gibbons dba 10X Ranch, filed an application seeking to appropriate for stock and domestic use the waters of Rain Tank Overflow Dam Reservoir. That application was later amended to seek 1.4 acre-feet per year of those waters for those purposes. See Application and Amended Application No. R-2782.

6. On June 18, 1979, 10X Ranch filed a claim for a water right in a stockpond pursuant to A.R.S. § 45-271 et seq. The date of construction was listed as 1960, and the capacity of the stockpond on August 29, 1977 was listed as 1.14 acre-feet. On February 18, 1986, the name of the claimant was amended to: "Gregg L. Gibbons DBA 10X Ranch". Both the original and amended claims were noticed as provided in A.R.S. § 45-274. See Application and Amended Application No. 38-15265.

7. Application and Amended Applications Nos. R-2782 and 38-15265 both concern the right to use the same water by the same applicant. See Application and Amended Applications Nos. R-2782 and 38-15265.

8. On file at the Department is Statement of Claim of Right to Use Public Waters of the State No. 36-65512 which was timely filed by Globe Development in 1978 pursuant to A.R.S. § 45-182. This filing claims the right to use all of the waters of Rain Tank Wash. According to this Statement of Claim, the

legal basis for that claim was a "Water Location Notice" dated December 20, 1913, a copy of which was attached to the Statement. The 1913 Notice declares that William Babbitt "located and appropriated" for "all of the useful and beneficial purposes" "all of the unappropriated surplus and flood waters" "from all of the watershed, gulches, ravines, canyons, and draws" which drain into "[t]hat certain dam and reservoir known as 'Rain Tanks.'" located in Coconino County, State of Arizona. See Statement of Claim No. 36-65512.

9. There is no disputed material fact concerning Application and Amended Application No. 38-15265.

10. The water in the Rain Tank Dam and Reservoir and the Rain Tank Overflow Dam Reservoir is appropriable. See Kirby "Investigation" Memo of September 4, 1985 to Dishlip; and Aerial Photo No. 2322.

11. The waters sought to be appropriated by ADOT in Application No. 33-49609 are diffuse surface waters. See Application No. 33-49609.

12. The presumption of the truth and accuracy of the contents of Statement of Claim No. 36-65512, as it relates to the Babbitt "Water Location Notice" of December 20, 1913, has not been rebutted in these proceedings.

DECISION

I. APPLICATIONS NOS. 33-87231, 33-78591, 33-49610 and R-2782

ADOT, Hatch and Gibbons all seek to appropriate the waters of the Rain Tank Wash. However, Statement of Claim No. 36-65512, as described above, dates back to at least 1913 and claims the right to appropriate all waters which flow into the Rain Tank Dam Reservoir. Under A.R.S. § 45-185(A), that Statement of Claim is presumed to be true and accurate, and that presumption has not been rebutted in these proceedings.

Under A.R.S. § 45-153(A), the Director of the Department of Water Resources must reject an application to appropriate "when the application or the proposed use conflicts with vested rights . . . ." Because all of the waters of the Rain Tank Dam Reservoir and Rain Tank Overflow Dam Reservoir are, for the purposes of these proceedings, subject to the prior vested rights evidenced by Statement of Claim No. 36-65512, Application Nos. 33-87231, 33-78591, 33-49610, and R-2782 necessarily conflict with those vested rights, and must be denied. We note in this context that we reach this conclusion without the necessity of making any finding relative to the present ownership or the quantity of the water right evidenced by Statement of Claim No. 36-65512.

II. APPLICATION NO. 33-49609

ADOT seeks, in Application No. 33-49609, to appropriate rainfall and snowfall which fall on the paved areas of Grand Canyon Airport. However, not all water in Arizona is subject to appropriation. Waters which are appropriable are described in A.R.S. § 45-141. Waters which are not expressly listed by the

legislature as appropriable are not appropriable. See Maricopa County Municipal Water Conservation District v. Southwest Cotton Co., 39 Ariz. 65, 80, 4 P.2d 369, 375, (1931), modified on other grounds, 39 Ariz. 367, 7 P.2d 254 (1932).

The same water may, at different times, change its legal character depending upon its location. For example, when it first falls to earth in the form of precipitation, and has neither reached a natural channel nor percolated into the ground, the water may be characterized as "diffuse surface water". Later, the water may enter the natural bed of a wash and become appropriable surface water; still later, it may percolate into the aquifer and become groundwater. The legal status of the water thus depends upon its location. Compare Espil Sheep Co. v. Black Bill & Doney Parks Water Users Association, 16 Ariz. App. 201, 203, 492 P.2d 450, 452 (1972) (holding that diffuse surface waters are not appropriable); and England v. Ally Ong Hing, 105 Ariz. 65, 71, 459 P.2d 498, 504, (1969) (holding that stream waters are appropriable).

Application No. 33-49609 seeks to appropriate rain and snow which falls upon the paved areas of Grand Canyon Airport. Diffuse surface waters are those "which flow on the land from the skies or arise in springs and diffuse themselves over the surface of the ground, following no defined course or channel and are lost by being diffused over the ground through percolation, evaporation, or natural drainage. The essential characteristics of diffuse surface waters are that their flows are shortlived and that the waters are spread over the ground and not concentrated

or confined in bodies of water conforming to the definition of lakes or ponds." Espil Sheep Co., 116 Ariz. App. at 203, 492 P.2d at 452 (citations omitted). It is evident that waters sought to be appropriated in this application are diffuse surface waters, and as such are not subject to appropriation, until and unless such waters make their way into one of the bodies of water or water courses enumerated in A.R.S. § 45-141(A).

Even then, a third-party appropriator of such waters may not compel the owner of the land upon which the diffuse surface water originates to continue to allow such waters to reach the appropriable body of water or water course.

In the discussion of this issue, ADOT has argued that an Order of Rejection by the State Land Commissioner in Application No. R-2622 has the effect of res judicata on this issue. In Application No. R-2622, Gregg L. Gibbons sought to appropriate "new" waters which resulted from the construction of Grand Canyon Airport and which found their way into Rain Tank Overflow Dam Reservoir. In the Order of Rejection, the State Land Commissioner found that the water was not appropriable. However, in the instant proceedings, Order of Rejection No. R-2622 has not been taken into account by the Hearing Officer in deciding this issue, and this Decision need not and does not reach the merits of the res judicata argument.

III. APPLICATION NO. 38-15265

Gibbons' application No. 38-15265 for a water right in a stockpond meets the criteria set forth in A.R.S. § 45-272(A)

and has been noticed as provided in A.R.S. § 45-274. There being no disputed material fact, Gibbons is entitled to a stockpond water right in the Rain Tank Overflow Dam Reservoir.

CONCLUSIONS OF LAW

1. A.R.S. § 45-153 requires the Director to reject applications to appropriate water which "conflict with vested rights".

2. For purposes of these proceedings, the water right evidenced by Statement of Claim No. 36 65512 is a vested right.

3. Amended Application No. 33-87231 filed by ADOT conflicts with vested rights.

4. Amended Application No. 33-49610 filed by ADOT conflicts with vested rights.

5. Amended Application No. 33-78591 filed by Hatch conflicts with vested rights.

6. Amended Application R-2782 filed by Gibbons dba 10X Ranch conflicts with vested rights.

7. Diffuse surface water is not subject to appropriation unless and until such water makes its way into one of the bodies of water or water courses, enumerated in A.R.S. § 45-141.

8. Pursuant to Title 45, Chapter 1, Article 10, Arizona Revised Statutes, a possible conflict with prior vested rights is not a relevant factor in the consideration of a claim to a water right in a stockpond which meets the criteria set forth in A.R.S. § 45-272.

9. Pursuant to A.R.S. § 45-272(A) and Amended Application No. 38-15265, Gibbons has a valid water right in Rain Tank Overflow Dam Reservoir for 1.14 acre-feet, with a priority date of 1960, as provided in A.R.S. § 45-272(B).

DATED this 24th day of June, 1988.

Herb Dishlip
Herb Dishlip
Hearing Officer

Appendix B

ADWR Acting Director Order (Based on Finding's from Hearing Officer in Appendix A), June 28, 1988

DRAFT

ARIZONA DEPARTMENT OF WATER RESOURCES

BEFORE THE DIRECTOR

IN THE MATTER OF THE APPLICATION TO APPROPRIATE PUBLIC WATERS OF THE STATE OF ARIZONA APPLICATION NOS. R-2782; 33-49609; 33-49610; 33-78591; 33-87231 APPLICANTS: Gregg L. Gibbons (R-2782); Arizona Department of Transportation (33-49609; 33-49610; 33-87231); Delmar L. Adams, Marvin R. Hatch, H.B. Hogle (33-78591) SOURCE: On the Colorado River Watershed PROTESTANTS: State of Arizona; Arizona Department of Transportation; Gregg L. Gibbons; Globe Development Company; Marvin R. Hatch	ORDER
IN THE MATTER OF THE APPLICATION FOR CERTIFICATION OF WATER RIGHT FOR A STOCK POND. APPLICATION No. 38-15265. APPLICANT: Gregg L. Gibbons DBA 10X Ranch SOURCE: Rain Tank Wash, on the Colorado River watershed	

IT IS HEREBY ORDERED, that the Findings of Fact, Conclusions of Law and Decision of the Hearing Officer, which are attached hereto and made a part hereof by reference, are hereby

adopted by the Director of the Department of Water Resources, and IT IS FURTHER ORDERED AS FOLLOWS:

1. Amended Application No. 33-87231 is hereby denied.

2. Amended Application No. 33-49610 is hereby denied.

3. Amended Application No. 33-78591 is hereby denied.

4. Amended Application R-2782 is hereby denied.

5. Amended Application No. 33-49609 is hereby denied.

6. A certificate of water right shall be issued to "Gregg L. Gibbons DBA 10X Ranch", pursuant to A.R.S. § 45-275(C) and Amended Application No. 38-15265, for the stockpond referred to herein as "Rain Tank Overflow Dam Reservoir", in the amount of 1.14 acre-feet, with a priority date of 1960.

The resolutions of the above-listed applications render moot all pending motions concerning these applications. THEREFORE, IT IS ORDERED denying all such motions.

DATED this 28th day of June, 1988.

C. LAURENCE LINSER
Acting Director
Department of Water Resources
99 East Virginia Avenue
Phoenix, Arizona 85004

(S E A L)

A Copy of the foregoing is sent by certified mail this 5th day of ~~June~~ July, 1988, to:

Joe Acosta, Jr.
Richard Kamps
Assistant Attorney General
Transportation Division
1275 W. Washington, Room 160
Phoenix, Az 85007
Certified No. 541 [illegible]

David C. Kennedy
100 West Clarendon, Suite 200
Phoenix, Az 85013
Certified No. 541 [illegible]

A. Michael Bernstein
PAYTAS, LUTICH, BERNSTEIN,
SHANNON & FLEMING
2929 N. 44th St., Suite 120
Phoenix, Az 85018

Certified No. 541 807 920

Delmar L. Adams
Grand Canyon Ranch
4250 North Bush Highway
Mesa, Az 85021

Certified No. 541 807 921

Harold B. Hogle
P. O. Box 17077
Fountain Hills, Az 85269

Certified No. 541 807 922

Mark Wilmer
SNELL & WILMER
3100 Valley Bank Center
Phoenix, Az 85073

Certified No. 541 807 923

Werner G. Leppin
P. O. Box 53
Winslow, Az 86047

Certified No. 541 807 924

Steven A. Hirsch
EVANS, KITCHEL & JENCKES
2600 N. Central
Phoenix, Az 85004-3099

Certified No. 541 807 925

Appendix C

Exhibit from ADWR Investigation Detailing Rain Tank, Adjacent Reservoir Names, and Flow (Overflow Tank – Claim No. 38-15265)

DRAFT

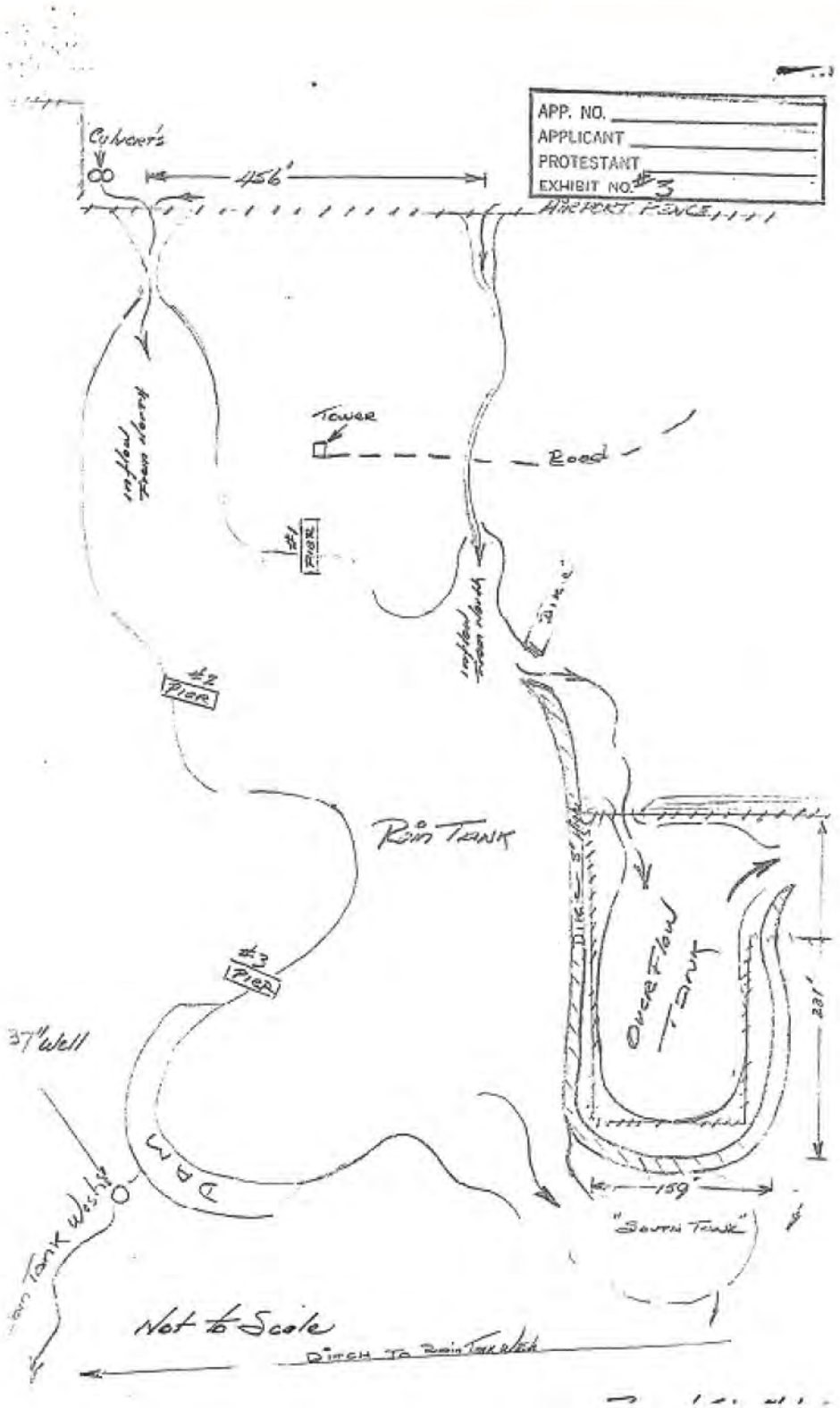
APP. NO.
APPLICANT
PROTESTANT
EXHIBIT NO. #3
Culverts
1456'
AIRPORT FENCE
Tower
Road
Pier #1
Pier #2
Pier #3
RUN TANK
OVERFLOW TANK
DIKE
231'
159'
"SOUTH TANK"
37" Well
DAM
Run Tank Weight
Not to Scale
DITCH TO RUN TANK

Appendix D

Letter from Deputy Counsel of ADWR to Assistant Attorney General for the State of Arizona, May 26, 1994

DRAFT

HELM

33-78591

ARIZONA DEPARTMENT OF WATER RESOURCES
15 South 15th Avenue, Phoenix, Arizona 85007
Telephone (602) 542-1507
Fax (602) 542-3383

May 26, 1994

FIFE SYMINGTON
Governor

RITA P. PEARSON
Director

Joe Acosta, Jr.
Assistant Attorney General
Office of the Attorney General
1275 W. Washington St.
Phoenix, AZ 85007-2926

Re: Rain Tank Settlement

Dear Mr. Acosta:

This confirms our telephone conversation of May 24, 1994. I have been working with T.C. Richmond in advising the Director on the Rain Tank case.

By letter dated April 15, 1994, the Director requested a copy of the settlement agreement entered into between ADOT and Mr. Hatch. This request was based upon representations by you and Mr. Sullivan, attorney for Mr. Hatch, in letters dated April 11, 1994, that the parties had settled the Rain Tank case. The Director also requested a list of issues which you believed should be dismissed as a result of the settlement and any issues upon which you believed a decision may still be necessary.

By a joint letter dated April 29, 1994, you and Mr. Sullivan advised the Director that ADOT now has all rights to the water flowing to Rain Tank, subject to the rights of Gregg Gibbons, dba 10X Ranch. By virtue of the settlement, the joint letter indicated that Mr. Hatch has assigned to ADOT his rights under Statement of Claim no. 36-65512 and application no. 33-78591. However, a copy of the settlement agreement was not enclosed.

Since the settlement agreement was not provided as requested, I called you. You advised me that the settlement agreement contained a confidentiality provision which prevented its disclosure. You offered instead to provide the Director with written assignments from Mr. Hatch to ADOT of the subject rights. I have confirmed with the Director that this will be an acceptable substitute. However, the assignments can only be accepted at face value since the Director will not be privy to any conditions that may be attached under the settlement agreement.

I also discussed with you the "Withdrawal of Protests" which was filed with your joint April 29, 1994 letter. I understand that you and Mr. Sullivan believe that this withdrawal moots the case pending before the Director.

As you are aware, the protests relate to ADOT's and Hatch's pending applications for water rights in Rain Tank. The case before the Director only addresses Mr. Hatch's rights under Statement of Claim 36-65512. Even if the Director decides that the issues in the pending case no longer need to be addressed, the applications will still need to be reviewed under A.R.S. § 45-153.

Upon receipt of the assignments from Mr. Hatch to ADOT, the Director will be issuing a decision and order. After the order issues and the time for filing a petition for review or rehearing has passed, the Director will take action on all pending applications, including those filed by Gibbons.

I look forward to hearing from you and assume that you will be discussing this matter with Mr. Sullivan. We would appreciate receipt of the assignments by no later than June 30, 1994.

Sincerely,

Janet L. Ronald
Deputy Counsel

cc: Rita Pearson, Director
T.C. Richmond, Chief Counsel
Mike Pearce, Deputy Counsel
William P. Sullivan, Esq.
Steven A. Hirsh, Esq.
David C. Kennedy, Esq.
Daniel L. Muchow, Esq.
A. Michael Bernstein, Esq.
Mark Wilmer, Esq.
Delmar L. Adams
Harold V. Hogle

Appendix E

Application for Assignment of Claim 36-65512 from Marvin R. Hatch to ADOT, June 1, 1994

DRAFT

Arizona Department of Water Resources
15 South 15th Avenue
Phoenix, Arizona 85007

RECEIVED
JUN - 1 1994
WATER RIGHTS DIV.

APPLICATION FOR ASSIGNMENT

COPY

Filed: 06/01/94
(Date)

(Note: General and special instructions are on the reverse of this form.)

In accordance with Arizona Revised Statutes § 45-164.B, the undersigned parties hereby request the assignment of the following water rights or claims, in whole, or in part:

Fee		Registry Number
$5.00	Application For Permit to Appropriate Public Water No.	33(A & R)-
$5.00	Permit to Appropriate Public Water No.	33(A & R)-
$5.00	Certificate of Water Right No.	33(A, R & BB)-
$5.00	Statement of Claim of Right-Registration No.	36- 65512
$5.00	Claim for Stockpond Water Rights Application No.	38-
$5.00	Stockpond Water Right Certificate No.	38-

(Note: Use attachment for listing of additional water rights or claims)

SELLER(S)/ASSIGNOR(S):

Name MARVIN R. HATCH c/o STEVEN A. HIRSCH BRYAN CAVE
(Print or Type)

Address 2800 N Central AVe #2100
Phoenix, AZ 85004-1019

Phone No. (602) 230-9319

SIGNATURE

4-28-94
(date signed)

BUYER(S)/ASSIGNEE(S):

Name AZ DEPARTMENT OF TRANSPORTATION AERONAUTICS DIVISION
(Print or Type)

Address 1833 W Buchanan, 2nd Flr
Phoenix, AZ 85007

Phone No. (602) 255-7691

Gary Adams
SIGNATURE

GARY ADAMS
(Please Print or Type Name)

6.1.94
(date signed)

DWR 33 7 04/92

Appendix D

Existing Water Use Information

APPENDIX D.1

Water Use Tables and Figures

Table D - 1 - Tenant's Annual Water Use (gallons)

User Description	2008	2009	2010	2011	2012	2013	2014	2015	2016	2017
DT0025 FAA	112,435	209,755	177,345	79,000	63,300	48,600	76,085	78,625	76,235	83,608
DT0034 GC Airlines	373,860	436,324	525,976	361,200	220,321	184,015	187,500	189,839	177,258	182,892
DT0036 GC Helicopters	145,402	170,641	314,527	140,700	108,577	86,593	113,676	89,501	84,827	66,844
DT0051 Maverick Helicopters main meter	179,650	204,275	209,625	169,200	258,572	218,563	190,668	171,202	176,644	170,661
DT0051 Maverick Heli Add'l Bldg (eff Dec 2013)	-	-	-	-	-	-	21,113	52,551	64,524	63,014
DT0065 Papillon Helicopters	599,840	283,316	408,094	432,500	373,918	262,062	331,230	480,784	283,381	206,655
DT0103 Town of Tusayan (eff Mar 2012)	-	-	-	-	-	515	3,512	4,085	4,338	4,089
DT0104 Town Res #1 (eff Oct 2013 usage)	-	-	-	-	-	7,853	33,706	22,837	29,001	27,283
DT0745 Town Res #2 (eff Oct 2013 usage)	-	-	-	-	-	1,589	22,010	14,629	10,572	10,409
DT0025 FAA	112,435	209,755	177,345	79,000	63,300	48,600	76,085	78,625	76,235	83,608
DT0034 GC Airlines	373,860	436,324	525,976	361,200	220,321	184,015	187,500	189,839	177,258	182,892
DT0036 GC Helicopters	145,402	170,641	314,527	140,700	108,577	86,593	113,676	89,501	84,827	66,844

Table D - 2 - Tenants' Maximum Monthly Water Use (gallons)

User Description	2008	2009	2010	2011	2012	2013	2014	2015	2016	2017
DT0025 FAA	45,800	91,230	65,908	10,590	6,745	7,030	11,179	12,288	11,235	38,742
DT0034 GC Airlines	52,000	63,195	77,276	57,094	25,085	21,490	22,519	20,438	18,978	21,448
DT0036 GC Helicopters	22,000	26,932	36,985	30,400	21,293	16,045	41,940	14,378	13,862	12,012
DT0051 Maverick Helicopters main meter	36,200	22,945	25,900	27,663	49,895	30,120	30,970	24,849	22,127	22,662
DT0051 Maverick Heli Add'l Bldg (eff Dec 2013)	-	-	-	-	-	-	5,209	6,343	7,150	8,272
DT0065 Papillon Helicopters	106,800	29,910	42,321	46,011	42,630	26,425	42,231	96,624	57,000	25,108
DT0103 Town of Tusayan (eff Mar 2012)	-	-	-	-	-	280	466	650	1,082	573
DT0104 Town Res #1 (eff Oct 2013 usage)	-	-	-	-	-	4,393	4,790	3,477	3,478	4,018
DT0745 Town Res #2 (eff Oct 2013 usage)	-	-	-	-	-	853	3,226	1,928	1,699	1,467
DT0025 FAA	45,800	91,230	65,908	10,590	6,745	7,030	11,179	12,288	11,235	38,742
DT0034 GC Airlines	52,000	63,195	77,276	57,094	25,085	21,490	22,519	20,438	18,978	21,448
DT0036 GC Helicopters	22,000	26,932	36,985	30,400	21,293	16,045	41,940	14,378	13,862	12,012

Table D - 3 - Tenants' Average Monthly Water Use (gallons)

User Description	2008	2009	2010	2011	2012	2013	2014	2015	2016	2017
DT0025 FAA	12,493	17,480	14,779	6,583	5,275	4,050	6,340	6,552	6,353	6,967
DT0034 GC Airlines	41,540	36,360	43,831	30,100	18,360	15,335	15,625	15,820	14,772	15,241
DT0036 GC Helicopters	16,156	14,220	26,211	11,725	9,048	7,216	9,473	7,458	7,069	5,570
DT0051 Maverick Helicopters main meter	19,961	17,023	17,469	14,100	21,548	18,214	15,889	14,267	14,720	14,222
DT0051 Maverick Heli Add'l Bldg (eff Dec 2013)	-	-	-	-	-	-	1,759	4,379	5,377	5,251
DT0065 Papillon Helicopters	66,649	23,610	34,008	36,042	31,160	21,839	27,603	40,065	23,615	17,221
DT0103 Town of Tusayan (eff Mar 2012)	-	-	-	-	-	43	293	340	362	341
DT0104 Town Res #1 (eff Oct 2013 usage)	-	-	-	-	-	654	2,809	1,903	2,417	2,274
DT0745 Town Res #2 (eff Oct 2013 usage)	-	-	-	-	-	132	1,834	1,219	881	867
DT0025 FAA	12,493	17,480	14,779	6,583	5,275	4,050	6,340	6,552	6,353	6,967
DT0034 GC Airlines	41,540	36,360	43,831	30,100	18,360	15,335	15,625	15,820	14,772	15,241
DT0036 GC Helicopters	16,156	14,220	26,211	11,725	9,048	7,216	9,473	7,458	7,069	5,570

Table D - 4 - Tenants' Monthly Water Use Summary (2008-2017)

User Description	Average Monthly Usage (gallons)	Max. Monthly Usage (gallons)	Min. Monthly Usage (gallons)
DT0025 FAA	8,530	91,230	1,526
DT0034 GC Airlines	24,144	77,276	8,230
DT0036 GC Helicopters	11,295	41,940	2
DT0051 Maverick Helicopters main meter	16,572	49,895	4,323
DT0051 Maverick Heli Add'l Bldg (eff Dec 2013)	1,725	8,272	-
DT0065 Papillon Helicopters	31,188	106,800	7,847
DT0103 Town of Tusayan (eff Mar 2012)	144	1,082	-
DT0104 Town Res #1 (eff Oct 2013 usage)	1,053	4,790	-
DT0745 Town Res #2 (eff Oct 2013 usage)	515	3,226	-
DT0025 FAA	8,530	91,230	1,526
DT0034 GC Airlines	24,144	77,276	8,230
DT0036 GC Helicopters	11,295	41,940	2

Table D - 5 - Additional Buildings' Annual Water Use (gallons)

User Description	2008	2009	2010	2011	2012	2013	2014	2015	2016	2017
ARFF	-	-	-	-	-	3,017	17,232	17,531	15,145	18,287
ADMIN BLDG	-	-	-	-	-	-	8,611	17,762	9,153	13,974
UPPER HOUSING	-	-	-	-	-	-	-	-	-	-
LOWER HOUSING	-	-	-	-	-	-	-	-	-	-
TERMINAL METER	-	-	-	-	-	-	84,346	97,520	68,509	57,215
SOUTH RAMP FIRE HYDRANT	-	-	-	-	-	-	-	-	26,436	88,035

Table D - 6 - Additional Buildings' Maximum Monthly Water Use (gallons)

User Description	2008	2009	2010	2011	2012	2013	2014	2015	2016	2017
ARFF	-	-	-	-	-	1,515	3,306	3,209	2,806	2,646
ADMIN BLDG	-	-	-	-	-	-	1,937	4,987	4,911	5,986
UPPER HOUSING	-	-	-	-	-	-	-	-	-	-
LOWER HOUSING	-	-	-	-	-	-	-	-	-	-
TERMINAL METER	-	-	-	-	-	-	13,021	17,341	10,953	9,216
SOUTH RAMP FIRE HYDRANT	-	-	-	-	-	-	-	-	14,737	14,890

Table D - 7 - Additional Buildings' Average Monthly Water Use (gallons)

User Description	2008	2009	2010	2011	2012	2013	2014	2015	2016	2017
ARFF	-	-	-	-	-	1,509	1,436	1,461	1,262	1,524
ADMIN BLDG	-	-	-	-	-	-	718	1,480	763	1,165
UPPER HOUSING	-	-	-	-	-	-	-	-	-	-
LOWER HOUSING	-	-	-	-	-	-	-	-	-	-
TERMINAL METER	-	-	-	-	-	-	7,029	8,127	5,709	4,768
SOUTH RAMP FIRE HYDRANT	-	-	-	-	-	-	-	-	2,203	7,336

Table D - 8 - Additional Buildings' Monthly Water Use Summary (2008-2017)

User Description	Average Monthly Usage (gallons)	Max. Monthly Usage (gallons)	Min. Monthly Usage (gallons)
ARFF	1,422	3,306	457
ADMIN BLDG	985	5,986	-
UPPER HOUSING	-	-	-
LOWER HOUSING	-	-	-
TERMINAL METER	6,105	17,341	-
SOUTH RAMP FIRE HYDRANT	7,666	14,890	-

Table D - 9 - Housing's Annual Water Use (gallons)

User Description	2008	2009	2010	2011	2012	2013	2014	2015	2016	2017
333 Airport Circle (MAVERICK 2/6/2015)	-	-	-	-	-	-	600	35,450	141,150	14,600
275 Airport Circle (WESTWIND 9/2014)	-	-	-	-	-	-	13,500	37,200	208,600	35,350
205 Airport Circle (EMPTY eff 7/27/16)	-	-	-	-	-	-	2,150	32,000	26,600	-
201 Airport Circle	-	-	-	-	-	-	2,950	11,300	11,900	11,700
193 Airport Circle (CCSO-empty)	-	-	-	-	-	-	2,100	8,850	-	-
807 Hellcat Alley (5/11/15)	-	-	-	-	-	-	17,200	25,550	34,750	39,850
819 Hellcat Alley (move in 5/29/16)	-	-	-	-	-	-	13,600	36,100	26,250	40,550
825 Hellcat Alley (EMPTY 5/11/2015)	-	-	-	-	-	-	11,750	20,150	140	3,700
830 Hellcat Alley (eff 12/29/17)	-	-	-	-	-	-	100	41,200	37,500	55,150
198 Airport Circle (eff 1/1/2016)	-	-	-	-	-	-	1,400	36,800	18,000	16,900
202 Airport Circle (eff 4/10/17)	-	-	-	-	-	-	30	7,290	51,650	40,000
206 Airport Circle	-	-	-	-	-	-	12,400	35,600	5,950	5,650
212 Airport Circle	-	-	-	-	-	-	5,050	21,150	18,700	12,850
250 Airport Circle	-	-	-	-	-	-	8,300	25,800	19,200	32,400
823 Beacon Drive	-	-	-	-	-	-	11,900	63,650	52,850	68,000
813 Beacon Drive	-	-	-	-	-	-	2,300	5,050	23,900	52,400
801 Beacon Drive (EMPTY eff 4/16/16)	-	-	-	-	-	-	8,700	4,700	3,750	50
787 Beacon Drive	-	-	-	-	-	-	16,350	70,800	40,450	28,950
777 Beacon Drive (EMPTY eff Mar 2017)	-	-	-	-	-	-	1,050	3,500	3,500	47,700
197 Airport Circle	-	-	-	-	-	-	3,800	16,250	19,000	18,550
266 Airport Circle (TFD-BRUSH)	-	-	-	-	-	-	6,500	25,150	9,300	10,250
333 Airport Circle (MAVERICK 2/6/2015)	-	-	-	-	-	-	600	35,450	141,150	14,600
275 Airport Circle (WESTWIND 9/2014)	-	-	-	-	-	-	13,500	37,200	208,600	35,350
205 Airport Circle (EMPTY eff 7/27/16)	-	-	-	-	-	-	2,150	32,000	26,600	-
201 Airport Circle	-	-	-	-	-	-	2,950	11,300	11,900	11,700
193 Airport Circle (CCSO-empty)	-	-	-	-	-	-	2,100	8,850	-	-
807 Hellcat Alley (5/11/15)	-	-	-	-	-	-	17,200	25,550	34,750	39,850
819 Hellcat Alley (move in 5/29/16)	-	-	-	-	-	-	13,600	36,100	26,250	40,550
825 Hellcat Alley (EMPTY 5/11/2015)	-	-	-	-	-	-	11,750	20,150	140	3,700

Table D - 10 - Housing's Maximum Monthly Water Use (gallons)

User Description	2008	2009	2010	2011	2012	2013	2014	2015	2016	2017
333 Airport Circle (MAVERICK 2/6/2015)	-	-	-	-	-	-	400	5,700	127,900	2,400
275 Airport Circle (WESTWIND 9/2014)	-	-	-	-	-	-	6,500	5,150	160,300	10,950
205 Airport Circle (EMPTY eff 7/27/16)	-	-	-	-	-	-	2,100	3,350	4,000	-
201 Airport Circle	-	-	-	-	-	-	1,050	1,300	1,200	1,100
193 Airport Circle (CCSO-empty)	-	-	-	-	-	-	1,100	1,650	-	-
807 Hellcat Alley (5/11/15)	-	-	-	-	-	-	14,200	3,850	3,750	5,200
819 Hellcat Alley (move in 5/29/16)	-	-	-	-	-	-	7,550	4,400	4,900	4,250
825 Hellcat Alley (EMPTY 5/11/2015)	-	-	-	-	-	-	5,950	4,050	60	2,050
830 Hellcat Alley (eff 12/29/17)	-	-	-	-	-	-	50	4,300	7,850	16,850
198 Airport Circle (eff 1/1/2016)	-	-	-	-	-	-	900	18,250	5,600	4,400
202 Airport Circle (eff 4/10/17)	-	-	-	-	-	-	20	1,550	28,600	12,800
206 Airport Circle	-	-	-	-	-	-	4,650	4,200	800	650
212 Airport Circle	-	-	-	-	-	-	1,800	2,350	2,250	1,900
250 Airport Circle	-	-	-	-	-	-	3,800	4,350	2,450	4,750
823 Beacon Drive	-	-	-	-	-	-	5,450	10,650	11,700	10,350
813 Beacon Drive	-	-	-	-	-	-	1,000	800	5,300	4,950
801 Beacon Drive (EMPTY eff 4/16/16)	-	-	-	-	-	-	3,800	1,150	1,000	50
787 Beacon Drive	-	-	-	-	-	-	6,200	9,400	7,050	5,400
777 Beacon Drive (EMPTY eff Mar 2017)	-	-	-	-	-	-	600	700	750	44,000
197 Airport Circle	-	-	-	-	-	-	1,350	2,100	2,500	3,450
266 Airport Circle (TFD-BRUSH)	-	-	-	-	-	-	2,250	3,700	900	1,050
333 Airport Circle (MAVERICK 2/6/2015)	-	-	-	-	-	-	400	5,700	127,900	2,400
275 Airport Circle (WESTWIND 9/2014)	-	-	-	-	-	-	6,500	5,150	160,300	10,950
205 Airport Circle (EMPTY eff 7/27/16)	-	-	-	-	-	-	2,100	3,350	4,000	-
201 Airport Circle	-	-	-	-	-	-	1,050	1,300	1,200	1,100
193 Airport Circle (CCSO-empty)	-	-	-	-	-	-	1,100	1,650	-	-
807 Hellcat Alley (5/11/15)	-	-	-	-	-	-	14,200	3,850	3,750	5,200
819 Hellcat Alley (move in 5/29/16)	-	-	-	-	-	-	7,550	4,400	4,900	4,250
825 Hellcat Alley (EMPTY 5/11/2015)	-	-	-	-	-	-	5,950	4,050	60	2,050

Table D - 11 - Housing's Average Monthly Water Use (gallons)

User Description	2008	2009	2010	2011	2012	2013	2014	2015	2016	2017
333 Airport Circle (MAVERICK 2/6/2015)	-	-	-	-	-	-	200	2,954	11,763	1,217
275 Airport Circle (WESTWIND 9/2014)	-	-	-	-	-	-	4,500	3,100	17,383	2,946
205 Airport Circle (EMPTY eff 7/27/16)	-	-	-	-	-	-	717	2,667	2,217	-
201 Airport Circle	-	-	-	-	-	-	983	942	992	975
193 Airport Circle (CCSO-empty)	-	-	-	-	-	-	700	738	-	-
807 Hellcat Alley (5/11/15)	-	-	-	-	-	-	5,733	2,129	2,896	3,321
819 Hellcat Alley (move in 5/29/16)	-	-	-	-	-	-	4,533	3,008	2,188	3,379
825 Hellcat Alley (EMPTY 5/11/2015)	-	-	-	-	-	-	3,917	1,679	12	308
830 Hellcat Alley (eff 12/29/17)	-	-	-	-	-	-	33	3,433	3,125	4,596
198 Airport Circle (eff 1/1/2016)	-	-	-	-	-	-	467	3,067	1,500	1,408
202 Airport Circle (eff 4/10/17)	-	-	-	-	-	-	10	608	4,304	3,333
206 Airport Circle	-	-	-	-	-	-	4,133	2,967	496	471
212 Airport Circle	-	-	-	-	-	-	1,683	1,763	1,558	1,071
250 Airport Circle	-	-	-	-	-	-	2,767	2,150	1,600	2,700
823 Beacon Drive	-	-	-	-	-	-	3,967	5,304	4,404	5,667
813 Beacon Drive	-	-	-	-	-	-	767	421	1,992	4,367
801 Beacon Drive (EMPTY eff 4/16/16)	-	-	-	-	-	-	2,900	392	313	4
787 Beacon Drive	-	-	-	-	-	-	5,450	5,900	3,371	2,413
777 Beacon Drive (EMPTY eff Mar 2017)	-	-	-	-	-	-	350	292	292	3,975
197 Airport Circle	-	-	-	-	-	-	1,267	1,354	1,583	1,546
266 Airport Circle (TFD-BRUSH)	-	-	-	-	-	-	2,167	2,096	775	854
333 Airport Circle (MAVERICK 2/6/2015)	-	-	-	-	-	-	200	2,954	11,763	1,217
275 Airport Circle (WESTWIND 9/2014)	-	-	-	-	-	-	4,500	3,100	17,383	2,946
205 Airport Circle (EMPTY eff 7/27/16)	-	-	-	-	-	-	717	2,667	2,217	-
201 Airport Circle	-	-	-	-	-	-	983	942	992	975
193 Airport Circle (CCSO-empty)	-	-	-	-	-	-	700	738	-	-
807 Hellcat Alley (5/11/15)	-	-	-	-	-	-	5,733	2,129	2,896	3,321
819 Hellcat Alley (move in 5/29/16)	-	-	-	-	-	-	4,533	3,008	2,188	3,379
825 Hellcat Alley (EMPTY 5/11/2015)	-	-	-	-	-	-	3,917	1,679	12	308

Table D - 12 - Housing's Monthly Water Use Summary

User Description	Average Monthly Usage (gallons)	Max. Monthly Usage (gallons)	Min. Monthly Usage (gallons)
333 Airport Circle (MAVERICK 2/6/2015)	4,819	127,900	-
275 Airport Circle (WESTWIND 9/2014)	7,370	160,300	-
205 Airport Circle (EMPTY eff 7/27/16)	1,519	4,000	-
201 Airport Circle	964	1,300	700
193 Airport Circle (CCSO-empty)	274	1,650	-
807 Hellcat Alley (5/11/15)	2,974	14,200	-
819 Hellcat Alley (move in 5/29/16)	2,940	7,550	-
825 Hellcat Alley (EMPTY 5/11/2015)	894	5,950	-
830 Hellcat Alley (eff 12/29/17)	3,369	16,850	-
198 Airport Circle (eff 1/1/2016)	1,850	18,250	-
202 Airport Circle (eff 4/10/17)	2,542	28,600	-
206 Airport Circle	1,496	4,650	250
212 Airport Circle	1,459	2,350	600
250 Airport Circle	2,189	4,750	200
823 Beacon Drive	4,963	11,700	-
813 Beacon Drive	2,213	5,300	-
801 Beacon Drive (EMPTY eff 4/16/16)	430	3,800	-
787 Beacon Drive	3,945	9,400	850
777 Beacon Drive (EMPTY eff Mar 2017)	1,394	44,000	-
197 Airport Circle	1,458	3,450	560
266 Airport Circle (TFD-BRUSH)	1,313	3,700	650
333 Airport Circle (MAVERICK 2/6/2015)	4,819	127,900	-
275 Airport Circle (WESTWIND 9/2014)	7,370	160,300	-
205 Airport Circle (EMPTY eff 7/27/16)	1,519	4,000	-
201 Airport Circle	964	1,300	700
193 Airport Circle (CCSO-empty)	274	1,650	-
807 Hellcat Alley (5/11/15)	2,974	14,200	-
819 Hellcat Alley (move in 5/29/16)	2,940	7,550	-
825 Hellcat Alley (EMPTY 5/11/2015)	894	5,950	-

Table D - 13 - Non-Employed Residential Area's Annual Water Use (gallons)

User Description	2008	2009	2010	2011	2012	2013	2014	2015	2016	2017
DT0051 3557 #1 Maverick (eff 2/6/15)	-	-	-	-	-	-	1,100	35,450	15,950	14,600
DT0114 3558 #2 WESTWIND (eff 9/1/2014)	-	-	-	-	-	-	14,405	37,200	49,900	35,350
205 Airport Circle #3580 (EMPTY EFF 7/27/16)	-	-	-	-	-	-	3,520	32,000	26,600	-
DT0108 266 TFD #22 Brush (eff 9/3/15)	-	-	-	-	-	-	14,460	25,150	9,300	10,250
DT0528 3564 #5 CCSO (empty 8/1/2015)	-	-	-	-	-	-	20	8,850	-	-
DT0096 3587 #15 Cox/Lynch	-	-	-	-	-	-	10,850	25,800	19,200	32,400
EMP NEW HOUSE #18 3712	-	-	-	-	-	-	15,375	-	-	-
EMP NEW HOUSE 3717 #10	-	-	-	-	-	-	4,510	-	-	-
EMPTY NEW HOUSE #7 3718	-	-	-	-	-	-	19,765	2,950	-	-

Table D - 14 - Non-Employed Residential Area's Maximum Monthly Water Use (gallons)

User Description	2008	2009	2010	2011	2012	2013	2014	2015	2016	2017
DT0051 3557 #1 Maverick (eff 2/6/15)	-	-	-	-	-	-	500	5,700	2,700	2,400
DT0114 3558 #2 WESTWIND (eff 9/1/2014)	-	-	-	-	-	-	6,500	5,150	12,650	10,950
205 Airport Circle #3580 (EMPTY EFF 7/27/16)	-	-	-	-	-	-	2,100	3,350	4,000	-
DT0108 266 TFD #22 Brush (eff 9/3/15)	-	-	-	-	-	-	5,300	3,700	900	1,050
DT0528 3564 #5 CCSO (empty 8/1/2015)	-	-	-	-	-	-	10	1,650	-	-
DT0096 3587 #15 Cox/Lynch	-	-	-	-	-	-	3,800	4,350	2,450	4,750
EMP NEW HOUSE #18 3712	-	-	-	-	-	-	4,600	-	-	-
EMP NEW HOUSE 3717 #10	-	-	-	-	-	-	3,300	-	-	-
EMPTY NEW HOUSE #7 3718	-	-	-	-	-	-	14,200	2,000	-	-

Table D - 15 - Non-Employed Residential Area's Average Monthly Water Use (gallons)

User Description	2008	2009	2010	2011	2012	2013	2014	2015	2016	2017
DT0051 3557 #1 Maverick (eff 2/6/15)	-	-	-	-	-	-	183	2,954	1,329	1,217
DT0114 3558 #2 WESTWIND (eff 9/1/2014)	-	-	-	-	-	-	2,401	3,100	4,158	2,946
205 Airport Circle #3580 (EMPTY EFF 7/27/16)	-	-	-	-	-	-	587	2,667	2,217	-
DT0108 266 TFD #22 Brush (eff 9/3/15)	-	-	-	-	-	-	2,410	2,096	775	854
DT0528 3564 #5 CCSO (empty 8/1/2015)	-	-	-	-	-	-	3	738	-	-
DT0096 3587 #15 Cox/Lynch	-	-	-	-	-	-	1,808	2,150	1,600	2,700
EMP NEW HOUSE #18 3712	-	-	-	-	-	-	2,563	-	-	-
EMP NEW HOUSE 3717 #10	-	-	-	-	-	-	752	-	-	-
EMPTY NEW HOUSE #7 3718	-	-	-	-	-	-	3,294	246	-	-

Table D - 16 - Non-Employed Residential Area's Monthly Water Use Summary

User Description	Average Monthly Usage (gallons)	Max. Monthly Usage (gallons)	Min. Monthly Usage (gallons)
DT0051 3557 #1 Maverick (eff 2/6/15)	1,583	5,700	-
DT0114 3558 #2 WESTWIND (eff 9/1/2014)	3,186	12,650	-
205 Airport Circle #3580 (EMPTY EFF 7/27/16)	1,445	4,000	-
DT0108 266 TFD #22 Brush (eff 9/3/15)	1,406	5,300	650
DT0528 3564 #5 CCSO (empty 8/1/2015)	206	1,650	-
DT0096 3587 #15 Cox/Lynch	2,095	4,750	270
EMP NEW HOUSE #18 3712	358	4,600	-
EMP NEW HOUSE 3717 #10	105	3,300	-
EMPTY NEW HOUSE #7 3718	528	14,200	-

Table D - 17 - General Annual Water Use (gallons)

User Description	2008	2009	2010	2011	2012	2013	2014	2015	2016	2017
TENANTS	1,411,187	1,304,311	1,635,567	1,182,600	1,024,688	809,790	979,500	1,104,053	906,780	815,455
ADDITIONAL BUILDINGS	-	-	-	-	-	3,017	110,189	132,813	119,243	177,511
HOUSING	-	-	-	-	-	-	141,730	563,540	753,140	534,600
NON-EMPLOYED RESIDENTIAL	-	-	-	-	-	-	84,005	167,400	120,950	92,600
TOTAL	**1,411,187**	**1,304,311**	**1,635,567**	**1,182,600**	**1,024,688**	**812,807**	**1,315,424**	**1,967,806**	**1,900,113**	**1,620,166**

Table D - 18 - General Maximum Monthly Water Use (gallons)

User Description	2008	2009	2010	2011	2012	2013	2014	2015	2016	2017
TENANTS	262,800	162,585	207,719	152,253	134,753	97,690	124,460	144,036	89,738	121,242
ADDITIONAL BUILDINGS	-	-	-	-	-	1,515	28,125	18,731	25,259	25,324
HOUSING	-	-	-	-	-	-	51,450	75,800	313,700	107,750
NON-EMPLOYED RESIDENTIAL	-	-	-	-	-	-	34,150	20,800	19,600	16,100
TOTAL	**262,800**	**162,585**	**207,719**	**152,253**	**134,753**	**99,205**	**238,185**	**259,367**	**448,297**	**270,416**

Table D - 19 - General Average Monthly Water Use (gallons)

User Description	2008	2009	2010	2011	2012	2013	2014	2015	2016	2017
TENANTS	156,799	108,693	136,297	98,550	85,391	67,483	81,625	92,004	75,565	67,955
ADDITIONAL BUILDINGS	-	-	-	-	-	251	9,182	11,068	9,937	14,793
HOUSING	-	-	-	-	-	-	11,811	46,962	62,762	44,550
NON-EMPLOYED RESIDENTIAL	-	-	-	-	-	-	7,000	13,950	10,079	7,717
TOTAL	**156,799**	**108,693**	**136,297**	**98,550**	**85,391**	**67,734**	**109,619**	**163,984**	**158,343**	**135,014**

Table D - 20 - General Monthly Water Use Summary

User Description	Average Monthly Usage (gallons)	Max. Monthly Usage (gallons)	Min. Monthly Usage (gallons)
TENANTS	95,071	262,800	32,604
ADDITIONAL BUILDINGS	11,419	28,125	-
HOUSING	51,662	313,700	-
NON-EMPLOYED RESIDENTIAL	11,444	34,150	-

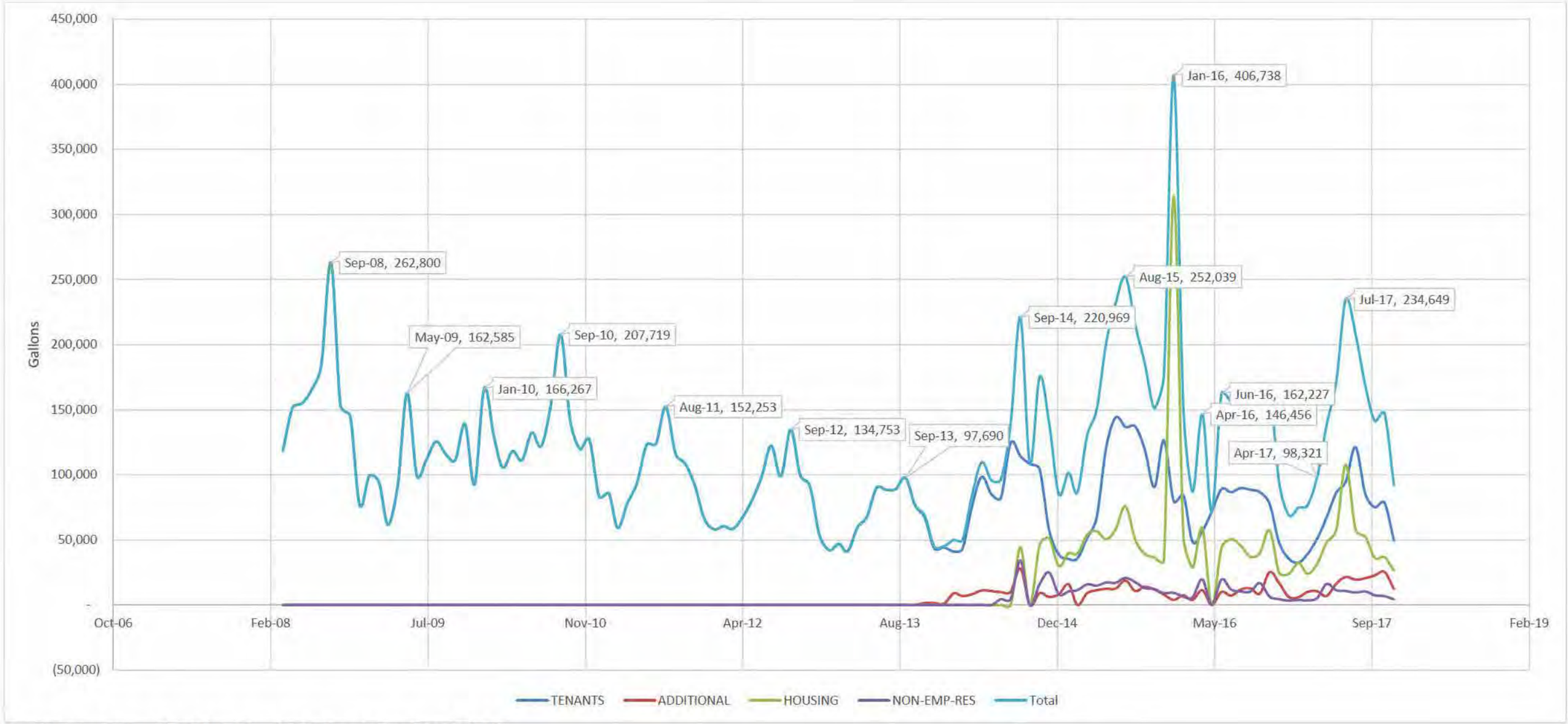

Figure D - 1 - Existing Monthly Water Use by User Group (2008-2017)

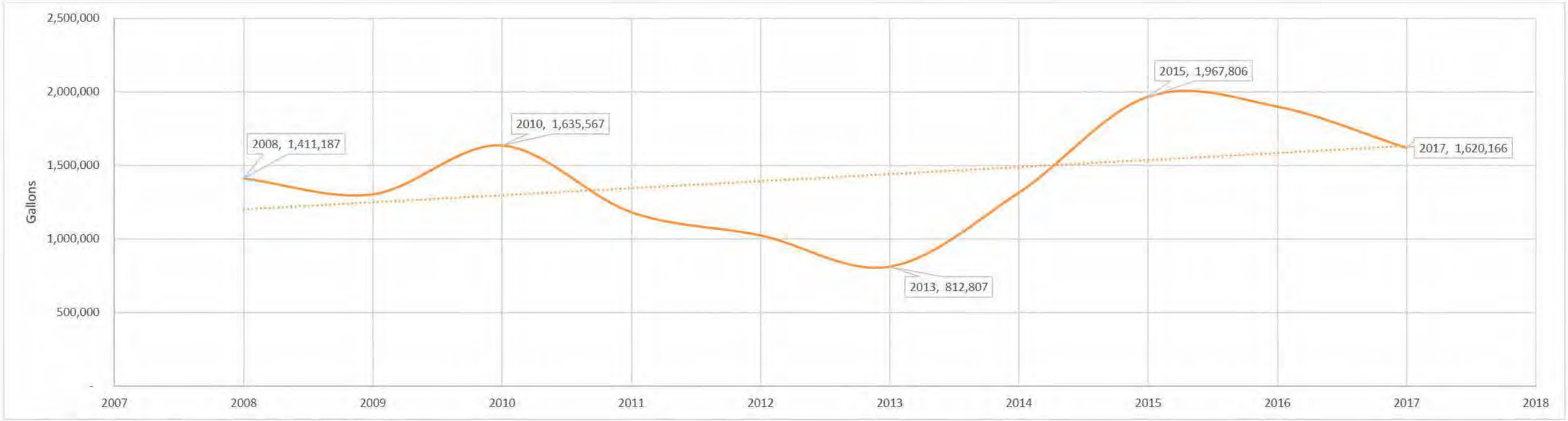

Figure D - 2 - Annual Water Consumption (2008-2017)

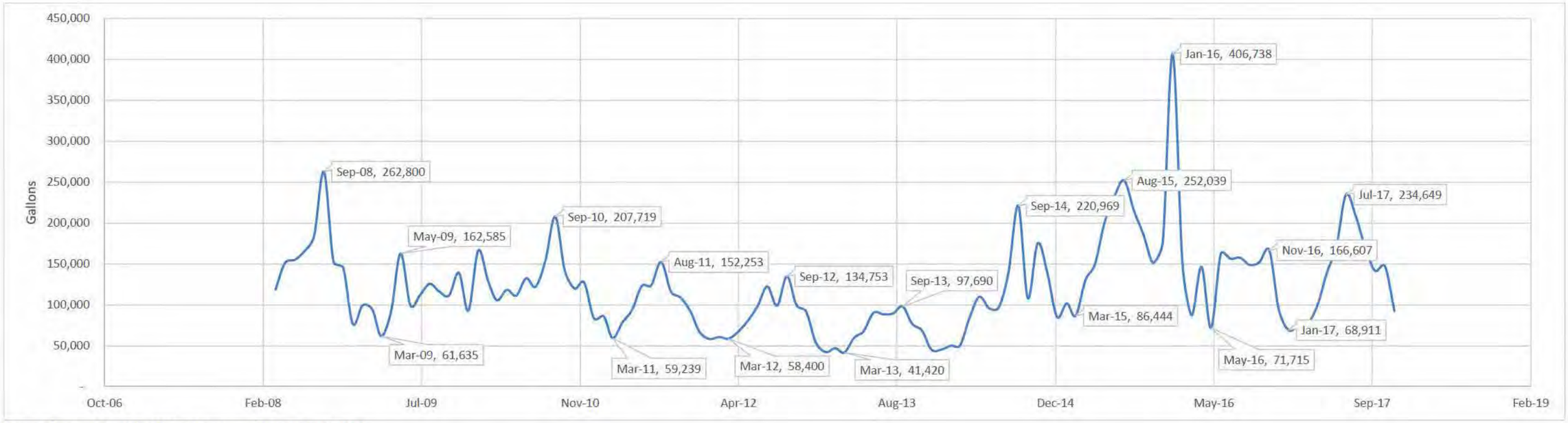

Figure D - 3 - Monthly Water Consumption (2008-2017)

APPENDIX D.2

Water User Location Maps

User Type	User Name/Adress	Location
Tennants	DT0025 FAA	1
	DT0034 GC Airlines	2
	DT0036 GC Helicopters	3
	DT0051 Maverick Helicopters main meter	4
	DT0051 Maverick Heli Add'l Bldg (eff Dec 2013)	5
	DT0065 Papillon Helicopters	6
	DT0103 Town of Tusayan (eff Mar 2012)	7
	DT0104 Town Res #1 (eff Oct 2013 usage)	8
	DT0745 Town Res #2 (eff Oct 2013 usage)	9
Additional Users	ARFF	10
	ADMIN BLDG	11
	UPPER HOUSING	12
	LOWER HOUSING	13
	TERMINAL METER	14
	SMALL WATER TANK	15
	SOUTH RAMP FIRE HYDRANT	16
Housing	MAVERICK 2/6/2015 333 Airport Circle	17
	WESTWIND 9/2014 275 Airport Circle	18
	EMPTY eff 7/27/16 205 Airport Circle	19
	201 Airport Circle	20
	CCSO-empty 193 Airport Circle	21
	5/11/15 807 Hellcat Alley	22
	819 Hellcat Alley (move in 5/29/16)	23
	EMPTY 5/11/2015 825 Hellcat Alley	24
	eff 12/29/17 830 Hellcat Alley	25
	198 Airport Circle (eff 1/1/2016)	26
	eff 4/10/17 202 Airport Circle	27
	206 Airport Circle	28
	212 Airport Circle	29
	250 Airport Circle	30
	823 Beacon Drive	31
	813 Beacon Drive	32
	EMPTY eff 4/16/16 801 Beacon Drive	33
	787 Beacon Drive	34
	EMPTY eff Mar 2017 777 Beacon Drive	35
	197 Airport Circle	36
	TFD-BRUSH 266 Airport Circle	37
Non-Employed Housing	DT0051 3557 #1 Maverick eff 2/6/15	38
	DT0114 3558 #2 WESTWIND eff 9/1/2014	39
	205 Airport Circle #3580 EMPTY EFF 7/27/16	40
	DT0108 266 TFD #22 Brush eff 9/3/15	41
	DT0528 3564 #5 CCSO (empty 8/1/2015)	42
	DT0096 3587 #15 Cox/Lynch	43
	EMP NEW HOUSE #18 3712	44
	EMP NEW HOUSE 3717 #10	45
	EMPTY NEW HOUSE #7 3718	46

Location Map

Key Map

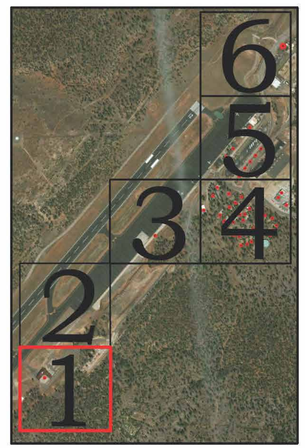

Dibble Engineering

DRAINAGE MASTER PLAN AND
WATER USE STUDY AT GRAND
CANYON NATINAL PARK AIRPORT
Water User Locations

Exhibit 1

User Type	User Name/Adress	Location
Tennants	DT0025 FAA	1
	DT0034 GC Airlines	2
	DT0036 GC Helicopters	3
	DT0051 Maverick Helicopters main meter	4
	DT0051 Maverick Heli Add'l Bldg (eff Dec 2013)	5
	DT0065 Papillon Helicopters	6
	DT0103 Town of Tusayan (eff Mar 2012)	7
	DT0104 Town Res #1 (eff Oct 2013 usage)	8
	DT0745 Town Res #2 (eff Oct 2013 usage)	9
Additional Users	ARFF	10
	ADMIN BLDG	11
	UPPER HOUSING	12
	LOWER HOUSING	13
	TERMINAL METER	14
	SMALL WATER TANK	15
	SOUTH RAMP FIRE HYDRANT	16
Housing	MAVERICK 2/6/2015 333 Airport Circle	17
	WESTWIND 9/2014 275 Airport Circle	18
	EMPTY eff 7/27/16 205 Airport Circle	19
	201 Airport Circle	20
	CCSO-empty 193 Airport Circle	21
	5/11/15 807 Hellcat Alley	22
	819 Hellcat Alley (move in 5/29/16)	23
	EMPTY 5/11/2015 825 Hellcat Alley	24
	eff 12/29/17 830 Hellcat Alley	25
	198 Airport Circle (eff 1/1/2016)	26
	eff 4/10/17 202 Airport Circle	27
	206 Airport Circle	28
	212 Airport Circle	29
	250 Airport Circle	30
	823 Beacon Drive	31
	813 Beacon Drive	32
	EMPTY eff 4/16/16 801 Beacon Drive	33
	787 Beacon Drive	34
	EMPTY eff Mar 2017 777 Beacon Drive	35
	197 Airport Circle	36
	TFD-BRUSH 266 Airport Circle	37
Non-Employed Housing	DT0051 3557 #1 Maverick eff 2/6/15	38
	DT0114 3558 #2 WESTWIND eff 9/1/2014	39
	205 Airport Circle #3580 EMPTY EFF 7/27/16	40
	DT0108 266 TFD #22 Brush eff 9/3/15	41
	DT0528 3564 #5 CCSO (empty 8/1/2015)	42
	DT0096 3587 #15 Cox/Lynch	43
	EMP NEW HOUSE #18 3712	44
	EMP NEW HOUSE 3717 #10	45
	EMPTY NEW HOUSE #7 3718	46

Location Map

Key Map

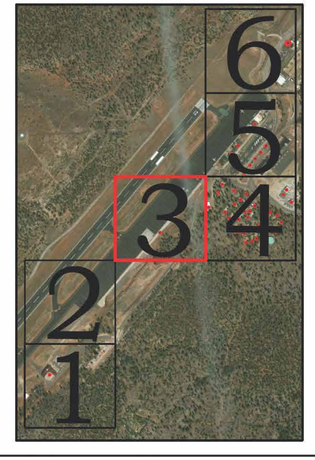

Dibble Engineering

DRAINAGE MASTER PLAN AND
WATER USE STUDY AT GRAND
CANYON NATINAL PARK AIRPORT
Water User Locations

Exibit 2

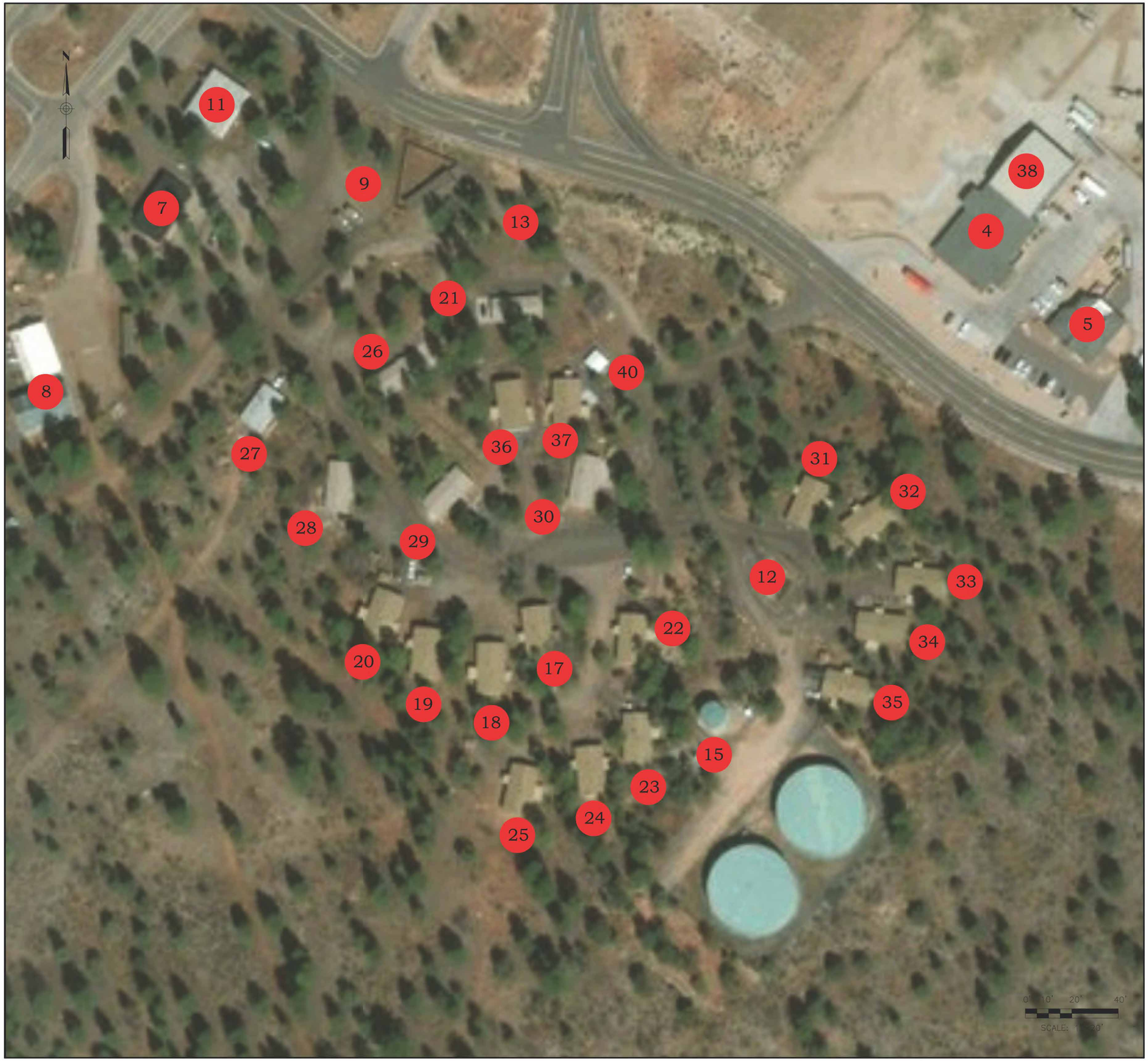

User Type	User Name/Adress	Location
Tennants	DT0025 FAA	1
	DT0034 GC Airlines	2
	DT0036 GC Helicopters	3
	DT0051 Maverick Helicopters main meter	4
	DT0051 Maverick Heli Add'l Bldg (eff Dec 2013)	5
	DT0065 Papillon Helicopters	6
	DT0103 Town of Tusayan (eff Mar 2012)	7
	DT0104 Town Res #1 (eff Oct 2013 usage)	8
	DT0745 Town Res #2 (eff Oct 2013 usage)	9
Additional Users	ARFF	10
	ADMIN BLDG	11
	UPPER HOUSING	12
	LOWER HOUSING	13
	TERMINAL METER	14
	SMALL WATER TANK	15
	SOUTH RAMP FIRE HYDRANT	16
Housing	MAVERICK 2/6/2015 333 Airport Circle	17
	WESTWIND 9/2014 275 Airport Circle	18
	EMPTY eff 7/27/16 205 Airport Circle	19
	201 Airport Circle	20
	CCSO-empty 193 Airport Circle	21
	5/11/15 807 Hellcat Alley	22
	819 Hellcat Alley (move in 5/29/16)	23
	EMPTY 5/11/2015 825 Hellcat Alley	24
	eff 12/29/17 830 Hellcat Alley	25
	198 Airport Circle (eff 1/1/2016)	26
	eff 4/10/17 202 Airport Circle	27
	206 Airport Circle	28
	212 Airport Circle	29
	250 Airport Circle	30
	823 Beacon Drive	31
	813 Beacon Drive	32
	EMPTY eff 4/16/16 801 Beacon Drive	33
	787 Beacon Drive	34
	EMPTY eff Mar 2017 777 Beacon Drive	35
	197 Airport Circle	36
	TFD-BRUSH 266 Airport Circle	37
Non-Employed Housing	DT0051 3557 #1 Maverick eff 2/6/15	38
	DT0114 3558 #2 WESTWIND eff 9/1/2014	39
	205 Airport Circle #3580 EMPTY EFF 7/27/16	40
	DT0108 266 TFD #22 Brush eff 9/3/15	41
	DT0528 3564 #5 CCSO (empty 8/1/2015)	42
	DT0096 3587 #15 Cox/Lynch	43
	EMP NEW HOUSE #18 3712	44
	EMP NEW HOUSE 3717 #10	45
	EMPTY NEW HOUSE #7 3718	46

Location Map

Key Map

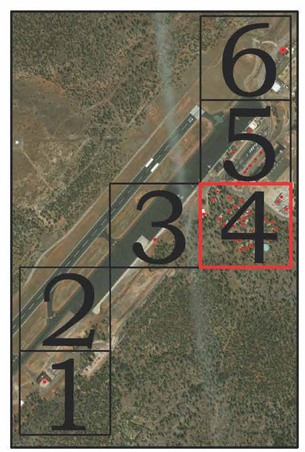

Dibble Engineering

DRAINAGE MASTER PLAN AND WATER USE STUDY AT GRAND CANYON NATINAL PARK AIRPORT

Water User Locations

Exhibit 3

User Type	User Name/Adress	Location
Tennants	DT0025 FAA	1
	DT0034 GC Airlines	2
	DT0036 GC Helicopters	3
	DT0051 Maverick Helicopters main meter	4
	DT0051 Maverick Heli Add'l Bldg (eff Dec 2013)	5
	DT0065 Papillon Helicopters	6
	DT0103 Town of Tusayan (eff Mar 2012)	7
	DT0104 Town Res #1 (eff Oct 2013 usage)	8
	DT0745 Town Res #2 (eff Oct 2013 usage)	9
Additional Users	ARFF	10
	ADMIN BLDG	11
	UPPER HOUSING	12
	LOWER HOUSING	13
	TERMINAL METER	14
	SMALL WATER TANK	15
	SOUTH RAMP FIRE HYDRANT	16
Housing	MAVERICK 2/6/2015 333 Airport Circle	17
	WESTWIND 9/2014 275 Airport Circle	18
	EMPTY eff 7/27/16 205 Airport Circle	19
	201 Airport Circle	20
	CCSO-empty 193 Airport Circle	21
	5/11/15 807 Hellcat Alley	22
	819 Hellcat Alley (move in 5/29/16)	23
	EMPTY 5/11/2015 825 Hellcat Alley	24
	eff 12/29/17 830 Hellcat Alley	25
	198 Airport Circle (eff 1/1/2016)	26
	eff 4/10/17 202 Airport Circle	27
	206 Airport Circle	28
	212 Airport Circle	29
	250 Airport Circle	30
	823 Beacon Drive	31
	813 Beacon Drive	32
	EMPTY eff 4/16/16 801 Beacon Drive	33
	787 Beacon Drive	34
	EMPTY eff Mar 2017 777 Beacon Drive	35
	197 Airport Circle	36
	TFD-BRUSH 266 Airport Circle	37
Non-Employed Housing	DT0051 3557 #1 Maverick eff 2/6/15	38
	DT0114 3558 #2 WESTWIND eff 9/1/2014	39
	205 Airport Circle #3580 EMPTY EFF 7/27/16	40
	DT0108 266 TFD #22 Brush eff 9/3/15	41
	DT0528 3564 #5 CCSO (empty 8/1/2015)	42
	DT0096 3587 #15 Cox/Lynch	43
	EMP NEW HOUSE #18 3712	44
	EMP NEW HOUSE 3717 #10	45
	EMPTY NEW HOUSE #7 3718	46

Location Map

Key Map

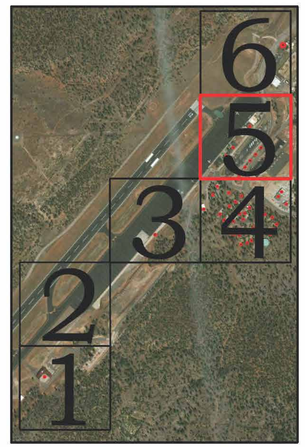

Dibble Engineering

DRAINAGE MASTER PLAN AND
WATER USE STUDY AT GRAND
CANYON NATINAL PARK AIRPORT
Water User Locations

Exhibit 4

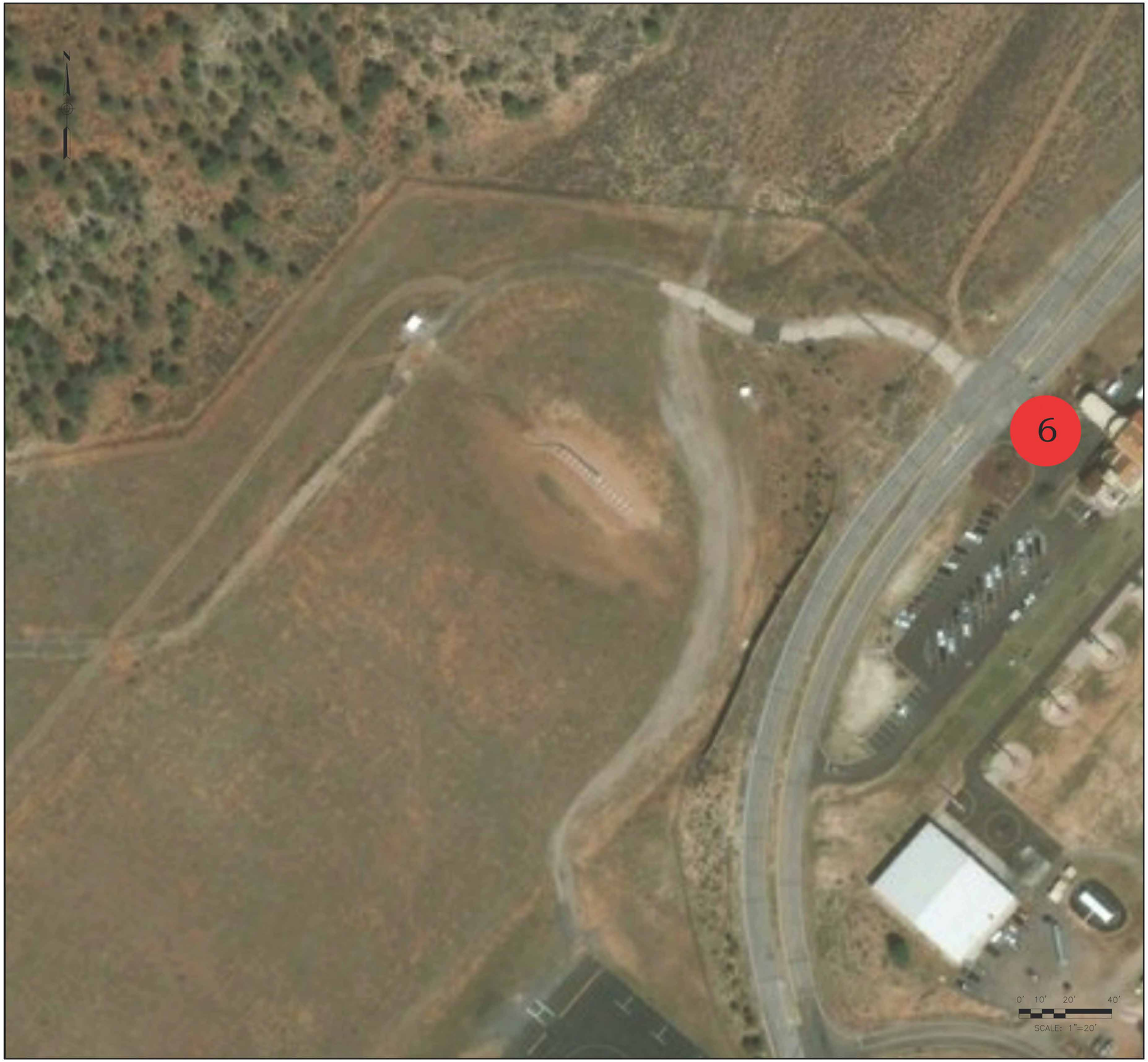

User Type	User Name/Adress	Location
Tennants	DT0025 FAA	1
	DT0034 GC Airlines	2
	DT0036 GC Helicopters	3
	DT0051 Maverick Helicopters main meter	4
	DT0051 Maverick Heli Add'l Bldg (eff Dec 2013)	5
	DT0065 Papillon Helicopters	6
	DT0103 Town of Tusayan (eff Mar 2012)	7
	DT0104 Town Res #1 (eff Oct 2013 usage)	8
	DT0745 Town Res #2 (eff Oct 2013 usage)	9
Additional Users	ARFF	10
	ADMIN BLDG	11
	UPPER HOUSING	12
	LOWER HOUSING	13
	TERMINAL METER	14
	SMALL WATER TANK	15
	SOUTH RAMP FIRE HYDRANT	16
Housing	MAVERICK 2/6/2015 333 Airport Circle	17
	WESTWIND 9/2014 275 Airport Circle	18
	EMPTY eff 7/27/16 205 Airport Circle	19
	201 Airport Circle	20
	CCSO-empty 193 Airport Circle	21
	5/11/15 807 Hellcat Alley	22
	819 Hellcat Alley (move in 5/29/16)	23
	EMPTY 5/11/2015 825 Hellcat Alley	24
	eff 12/29/17 830 Hellcat Alley	25
	198 Airport Circle (eff 1/1/2016)	26
	eff 4/10/17 202 Airport Circle	27
	206 Airport Circle	28
	212 Airport Circle	29
	250 Airport Circle	30
	823 Beacon Drive	31
	813 Beacon Drive	32
	EMPTY eff 4/16/16 801 Beacon Drive	33
	787 Beacon Drive	34
	EMPTY eff Mar 2017 777 Beacon Drive	35
	197 Airport Circle	36
	TFD-BRUSH 266 Airport Circle	37
Non-Employed Housing	DT0051 3557 #1 Maverick eff 2/6/15	38
	DT0114 3558 #2 WESTWIND eff 9/1/2014	39
	205 Airport Circle #3580 EMPTY EFF 7/27/16	40
	DT0108 266 TFD #22 Brush eff 9/3/15	41
	DT0528 3564 #5 CCSO (empty 8/1/2015)	42
	DT0096 3587 #15 Cox/Lynch	43
	EMP NEW HOUSE #18 3712	44
	EMP NEW HOUSE 3717 #10	45
	EMPTY NEW HOUSE #7 3718	46

Location Map

Key Map

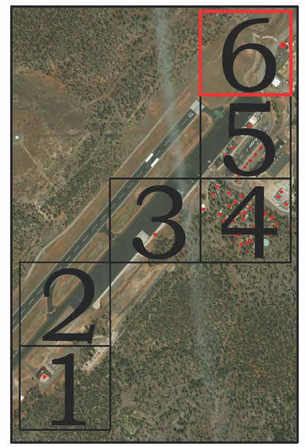

Dibble Engineering

DRAINAGE MASTER PLAN AND
WATER USE STUDY AT GRAND
CANYON NATINAL PARK AIRPORT
Water User Locations

Exhibit 5

Appendix E

Planning Advisory Committee

Grand Canyon National Park Airport Drainage Master Plan/Water Use Study
Planning Advisory Committee (PAC) - May 2018

1) Mr. Jared Raymond
   Community Planner - PHX 610
   Federal Aviation Administration
   Western-Pacific Region, Airports Division
   Phoenix Airports District Office
   3800 N. Central Avenue, Suite 1025
   Phoenix, AZ 85012
   602-792-1072
   Jared.Raymond@faa.gov

2) Mr. Ruben Ojeda
   Manager, Right-of-Way Section
   Arizona State Land Department
   1616 West Adams
   Phoenix, AZ 85007
   602-542-4631/4098
   rojeda@azland.gov

3) Ms. Heather Provencio
   Forest Supervisor
   USDA – Forest Service / Kaibab National Forest
   800 South Sixth Street
   Williams, AZ 86046
   928-635-8301
   hcprovencio@fs.fed.us

4) Ms. Christine Lehnertz
   Superintendent
   National Park Service
   P.O. Box 129
   20 South Entrance Road
   Grand Canyon, AZ 86023
   928-638-7945
   Chris_Lehnertz@nps.gov

5) Mr. Charlie Bassett
   Vice President of Operations
   Grand Canyon Airlines
   P.O. Box 455, HWY 64
   3555 Airport Road
   Grand Canyon, AZ 86023
   928-606-0220
   charlie@papillon.com

6) Mr. Ted Yasuda
General Manager
Maverick Airlines
P.O. Box 3297 HWY 64
Grand Canyon, AZ 86023
928-638-2622
tyasuda@flymaverick.com

7) Mr. Eric Duthie
Town Manager
Town of Tusayan
P.O. Box 709
845 Mustang Drive
Tusayan, AZ 86023
928-638-9909
tusayantownmanager@gmail.com

8) Mr. Bob Short
Principal Planner
Coconino County
2500 N. Fort Valley Road, Building 1
Flagstaff, AZ 86001
928-679-8850
bshort@coconino.az.gov

9) Mr. John Rueter
President
Hydro Resources, Inc.
P.O. Box 100
Grand Canyon, AZ 86023
928-522-4405
john@jwrueter.com

10) Mr. Jeremy Wicks
Airport Traffic Control Tower Manager
Federal Aviation Administration
Airport Traffic Control Tower
P.O. Box 3275
1393 Liberator Drive
Grand Canyon, AZ 86023
928-638-2850
jeremy.w.wicks@faa.gov

11) Mr. John Becker
Chief Operating Office & Director of Operations
Papillon Grand Canyon Helicopters
P.O. Box 455 HWY 64
Grand Canyon, AZ 86023
928-606-6143
john@papillon.com

12) Ms. Muriel Uqualla-Coochytewa
Chairperson
Havasupai Tribe
P.O. Box 10
Supai, AZ 86435
928-448-2731
htchair@havasupai-nsn.gov

13) Mr. Matthew Putesoy
Vice Chairman
Havasupai Tribe
P.O. Box 100
Supai, AZ 86435
928-448-2731
htvchair@havasupai-nsn.gov

14) Mr. Kevin Turner
Tribal Technical Contact
KT Consulting LLC
1026 North 3rd Street
Cottonwood, AZ 86326
kturner@ktcmllc.com

15) Ms. Sandy Bahr
Director, Grand Canyon Chapter
Sierra Club
514 West Roosevelt Street
Phoenix, AZ 85003
602-253-8633
Sandy.bahr@sierraclub.org

16) Mr. Don Kriz, P.E.
State Airport Engineer, Acting Program Admin.
ADOT – Aeronautics Group
1801 W. Jefferson St.
MD 426M
Phoenix, AZ 85007
602-712-8333
dkriz@azdot.gov

17) Mr. Ralph Ellis
Manager, Environmental Planning Section
ADOT – Environmental Planning
1611 W. Jackson St.
MD EM02
Phoenix, AZ 85007
602-712-7973
rellis@azdot.gov

18) Mr. Matt Smith
Airport Manager
Grand Canyon National Park Airport
P.O. Box 3399
871 Liberator Drive
Grand Canyon, AZ 86023
928-606-6893
msmith3@azdot.gov

19) Ms. Mackenzie Kirby, MPP
Community Relations Officer
ADOT – Northcentral District
1801 S. Milton Rd.
Flagstaff, AZ 86001
928-525-6494
mkirby@azdot.gov

20) Mr. Lee McCleary
Liability Loss Prevention Specialist
SMF Safety Manager
ADOT
1324 N 22nd Ave. MD 128A
Phoenix, AZ 85009
602-712-8165
lmccleary@azdot.gov

21) Mr. Rob Nelson
Habitat Evaluation & Lands Program Manager
Arizona Game and Fish Department
3500 S. Lake Mary Road
Flagstaff, AZ 86005
928-214-1253
rnelson@azgfd.gov